LET	ALTERATION	DATE	BY
A	ADDED 1" STRIPS ADHESIVE TAPE & NOTE & SECT C-C	11-7-41	Wagner
B	ADDED NOTE "ON PBY5 - - - - - -- 7/8 SPACING" NO. WT CHG	6-10-42	EASTERD
C	ON FACE REMOVED 2" DIM.	1-25-43	DANTZER

E.O. A38655
F.L.R. 10483

STENCIL WITH 1" HIGH LETTERS:
"#2 LINER-REAR-L.H." (ON PART "28G5162)
" " " - " -R.H." (ON PART "28G5162-R)

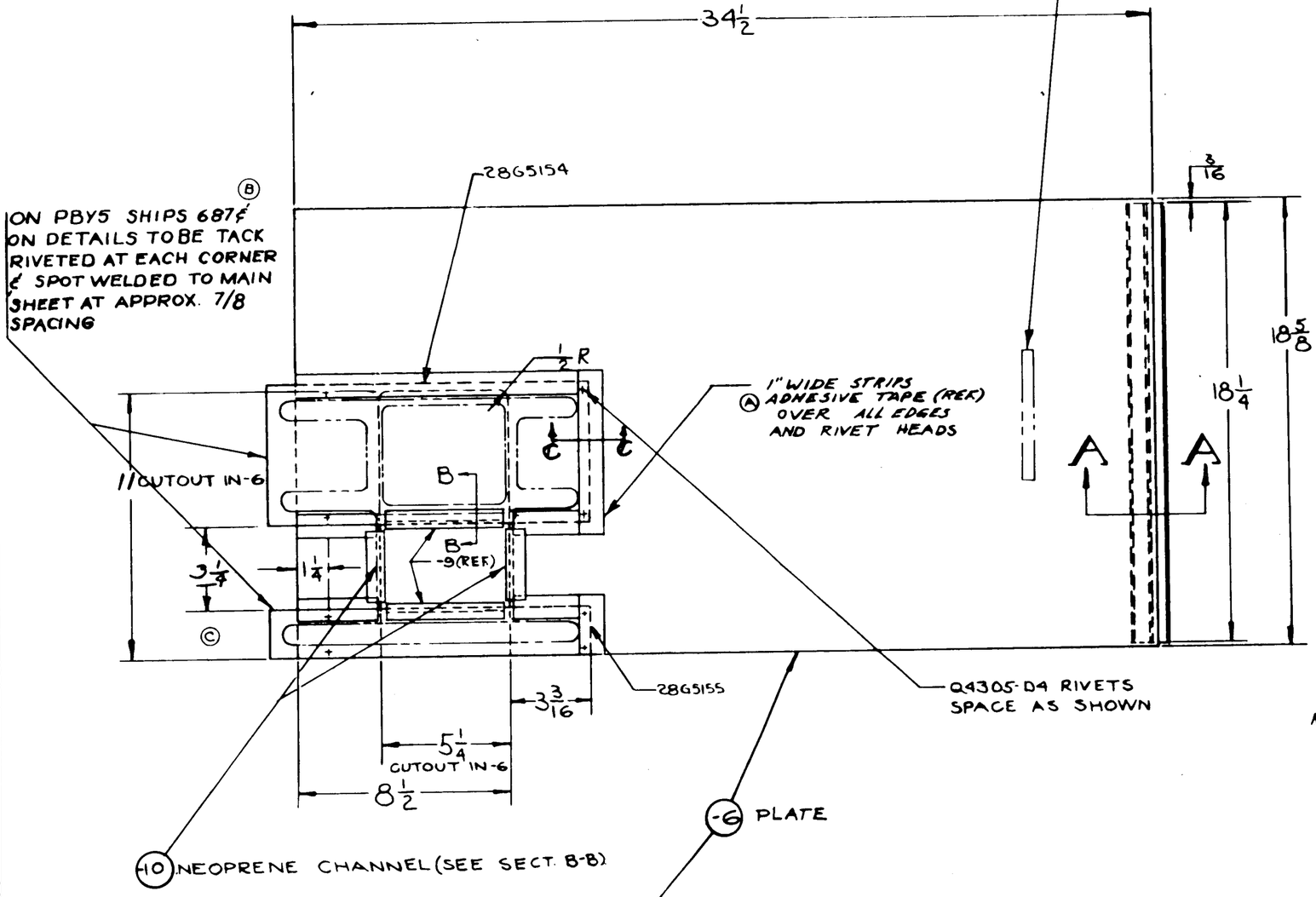

SECTION C-C
SCALE 12"=1'-0" Ⓐ

SECTION A-A
12" = 1'-0"

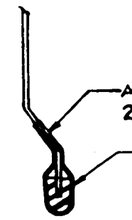

SECT. B-B
12" = 1'-0"

FINISH CODE	
Z	ANODIC TREATMENT
P	P-27 PRIMER
AP	ALUMINIZED PRIMER
C	CADMIUM PLATE

NOTES:
1. 28G5162 REPLACES 28G5042-9 SUB ASS'Y.
USE 28G5042-9L SUB ASS'Y. TO MAKE 28G5162 -R
" " -9R " " " " " -R
28G5162-7 IS IDENTICAL TO & REPLACES 28G5042-40
" -8 " " " " " " -41

2. REWORK 28G5042-29 PLATE INTO 28G5162-6 BY INCREASING SIZE OF CUTOUT TO NOTED DIMENSIONS.

RUSH RELEASED 10-24-41

ASSY DASH NO.	MODEL	NEXT ASSY	QTY
-R	28-5MN, AMN	28G5042	1
-L	28-5MN, AMN		1
-R	PBY-5A,		1
-L	PBY-5A		1
-R	28-5MA, ME		1
-L	28-5MA, ME		1
-L			1
-R			1
-R	PBY-5,		1
-L	PBY-5,	28G5042	1

REQUIREMENTS PER AIRPLANE

REPLACES 28G5042-9 OF NO. CALC WT.
REPLACED BY ASY WT.

LIGHT ON SHARP CORNERS UNLESS OTHERWISE SPECIFIED ± 1/32 | SCALE 3"=1'-0" UNLESS NOTED

STAMP PART NUMBER WHERE SHOWN

S.O. 927-1378

PART NO	STOCK	MATERIAL	SPEC.	LH REQ.	RH REQ.	LH REQ.	RH REQ.	LH REQ.	RH REQ.	LH REQ.	RH REQ.	LH REQ.	RH REQ.
	1"x3 FT.	ADHESIVE TAPE											
	2"x12 FT.	ADHESIVE TAPE											
28G5155													
28G5154													
-10	#33-175-20A x 3	NEOP. (GOODRICH Co.) N-11		2	2								
-9	#33-175-20A x 1 3/4	NEOP. (GOODRICH Co.) N-11		2	2								
-8	1/32 x 1/2 x 10 7/8	NEOP. N-11		1	1								
-7	Y36A ALCLAD 17ST			1	1								
28G5162-6	.032 x 12 1/2 x 37 7/8	2230 AL ALLOY	QQ-A-318(A)	1	1								
PARTS LIST PER ASSY.				-0		-2		-3		-4		-5	

A.C.		KARELL			
NAVY NONE	Z-2P (-6&7)	DES.			
HEAT TREAT	FINISH	DRAFT	CHECK	STRUCT	MAT	APPROV	ENG.

NAME LINER ASSEM.
FUEL CELL-BAY #2-REAR-WING
CONSOLIDATED AIRCRAFT CORP. SAN DIEGO, CALIF.

OPP. HAND 28G5162-R
SIZE D
28G5162

LET	ALTERATION	DATE	BY
A	ADDED VIEW C-C & 1" STRIPS ADHESIVE TAPE	11-6-41	
B	ADDED NOTE "DETAILS ..... "		
	7/8 SPACING" NO WT. CHG.	6-10-42	EASTERLY
C	ADDED 1/8 DIA (6 HOLES) TO ENDS OF BEADS OF 2865156 & 2865158, NO WT CHG	6-10-42	EASTERLY

E.O. A38656A

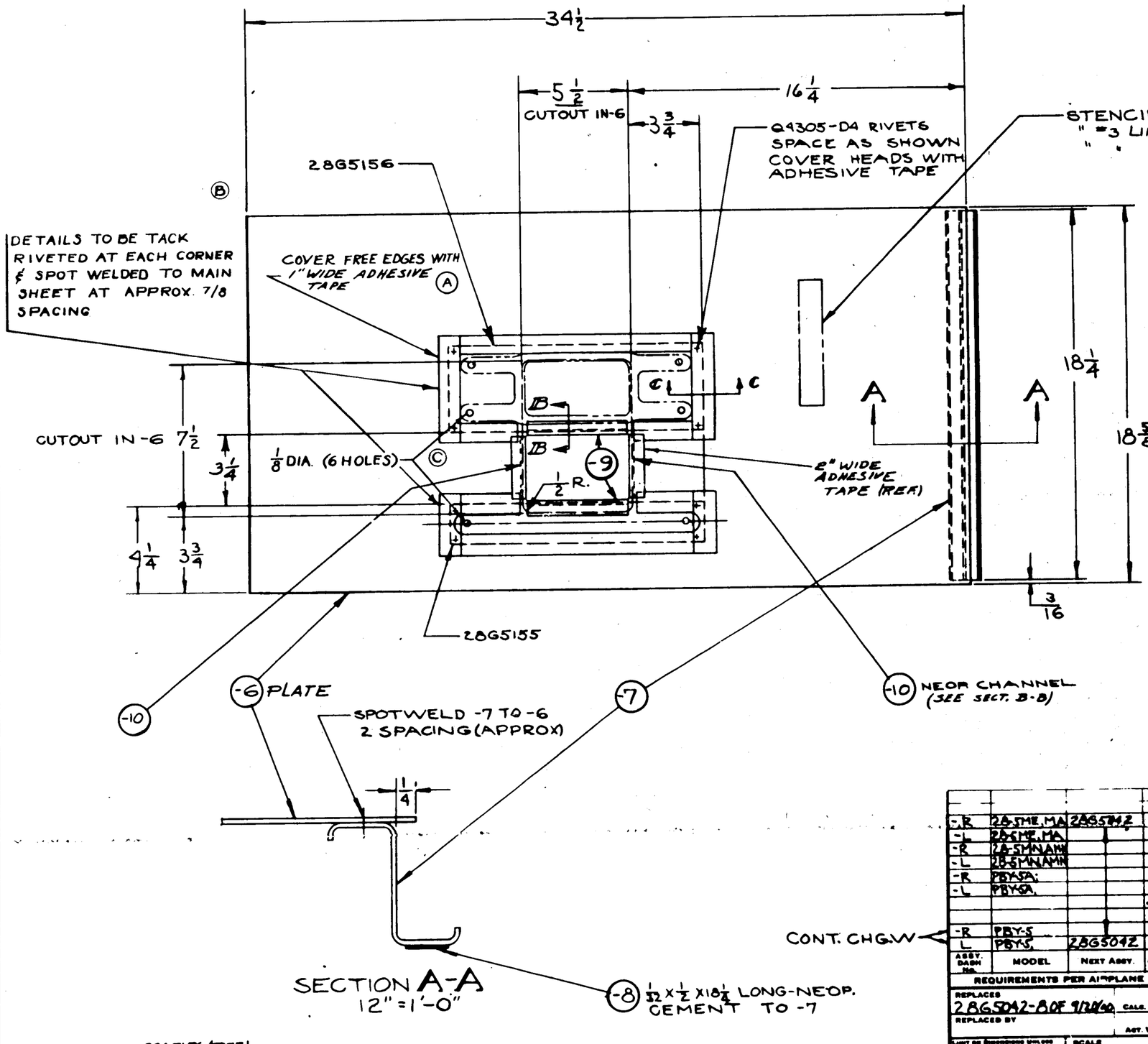

SECTION A-A
12" = 1'-0"

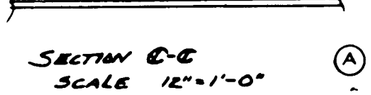

SECTION C-C
SCALE 12" = 1'-0"

FINISH CODE	
Z	ANODIC TREATMENT
P	P-27 PRIMER
AP	ALUMINIZED PRIMER
C	CADMIUM PLATE

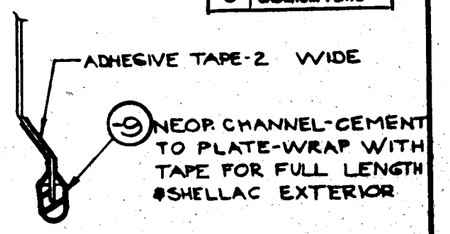

SECT. B-B
12" = 1'-0"

NOTES:

1. 2865163 REPLACES 2865042-8 SUB ASSY.
   USE 2865042-8L SUB ASSY. TO MAKE 2865163 " " -8R " " " " " " -R
   2865163-6 REPLACES 2865042-28 " -7 IS IDENTICAL TO & REPLACES 2865042 - 40 " -8 " " " " " " - 41
2. REWORK 2865042-28 INTO 2865163-6 BY ENLARGING CUTOUT AS PER NOTED DIMENSIONS.
3. FINISH -6 & -7 WITH Z-2P

CONT. CHG. W

ASSY. DASH NO.	MODEL	NEXT ASSY.	QTY.
-R	28-SME, MA	2865042	1
-L	28-SME, MA		1
-R	28-SMN, AM		1
-L	28-SMN, AM		1
-R	PBY-5A		1
-L	PBY-5A		1
			1
-R	PBY-5		1
-L	PBY-5	2865042	1

REQUIREMENTS PER AIRPLANE

REPLACES 2865042-8 OF 9/24/40 CALC. WT.
REPLACED BY ACT. WT.
SCALE 3" = 1'-0" & NOTED
+ 1/32
STAMP PART NUMBER WHERE SHOWN

RUSH RELEASED 10-24-41

PART NO.	STOCK	MATERIAL	SPEC.	LH REQ.	RH REQ.	LH REQ.	RH REQ.	LH REQ.	RH REQ.	LH REQ.	RH REQ.
		1" X 4½ FT.	ADHESIVE TAPE	1	1						
		2" X 1½ FT.	ADHESIVE TAPE	1	1						
2865156				1	1						
2865155				1	1						
-10	#33-475-20 x 3	NEOP. (GOODRICH Co)	N-11	2	2						
-9	#33-475-20 x 3	" (GOODRICH Co)	N-11	2	2						
-8	½ x ½ x 18 7/8	NEOP.	N-11	1	1						
-7	Y 36 A 3 OUTSIDE 18 5/8			1	1						
2865163-6	.051 x 18.5/8 x 34.1/2	2230 AL ALLOY	QQ-A-318(A)	1	1						
	PARTS LIST PER ASSY.			-0		-2		-3		-4	-5

A C					
NAVY NONE	NOTED		10-16-41		
HEAT TREAT	FINISH		DRAFT	STRUCT	MAT

NAME LINER ASSEM. - FUEL CELL-BAY "3" REAR-WING
CONSOLIDATED AIRCRAFT CORP. SAN DIEGO, CALIF.

OPP. HAND 2865163-R
DWG. SIZE D
2865163

LET	ALTERATION	DATE	BY
A	ADDED -9, ADHESIVE TAPE	1-7-8	
	& SECTION B-B & DRILL NOTE		
B	IN NOTE, 28G5242-7, -27, -39 & -59		
	REPLACES 28G5240-7, -27, -39 & -59		
	NO WT. CHG.	3-25-42	HUNT
C	ADDED -10 FOR TAPE; REMOVED -6, -7, -8, -9 TAPE FROM R. ASSY. NO WT. CHG.	10-17-42	SMITH

EO A57180

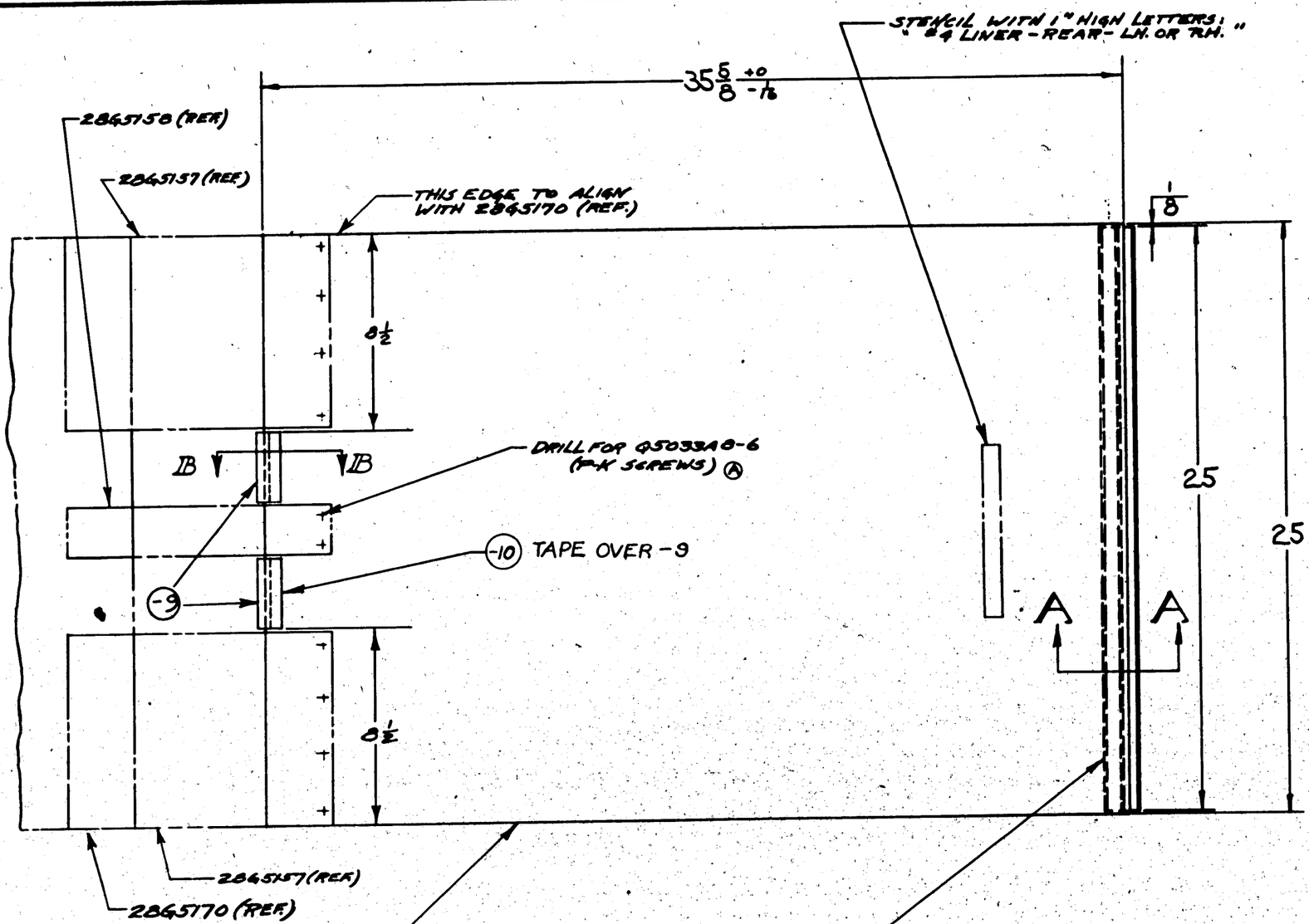

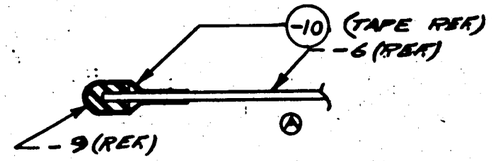

SECTION IB-IB (TYP)
SCALE 12"=1'-0"

CEMENT -9 SECURELY BEFORE COVERING WITH TAPE. SHELLAC TAPE.

NOTE: (8)
2845164 REPLACES 2845042-7 SUB ASSY
USE 2845042-7 TO MAKE 2845164
2845164-6 IS IDENTICAL TO & REPLACES 2845042-27
2845164-7 " " " " " 2845042-39
2845164-8 " " " " " 2845042-59

FINISH CODE	
Z	ANODIC TREATMENT
P	P-27 PRIMER
AP	ALUMINIZED PRIMER
C	CADMIUM PLATE

ASSY. DASH NO.	MODEL	NEXT ASSY.	REQ'D
28-5AMN	28G5042		2
28-5MN			2
28-5ME			2
28-5MA			2
+ PBY-5A			2
PBY-5	28G5042		2

REQUIREMENTS PER AIRPLANE

REPLACES 28G5042-7 OF 9-20-40 — CALC. WT.

REPLACED BY — ACT. WT.

UNLESS OTHERWISE DIMENSIONS ± 1/32 NOTED — SCALE 3/8"=1'-0" & NOTED

STAMP PART NUMBER WHERE SHOWN

PART NO.	STOCK	MATERIAL	SPEC.	LH REQ. -0	RH REQ. -2	LH REQ. -3	RH REQ. -4	LH REQ. -5	RH REQ.
-10	2" X 1/2 FT	ADHESIVE TAPE		1					
-9	1/32 (.25-.30 LB)	GOODRICH (A)	NEOP. N-11	2					
-8	1/32 X 1/2 X 2.5/16	NEOPRENE	N-11	1					
-7	Y36A5087, .25 LB			1					
-6	.051 X 2.5/16 X 36 5/16	5250 ALCLAD	QQ-A-318(A)	1					

PARTS LIST PER ASSY.

AC						
NAVY NONE	Z-2P(61-7)	10-16-41				
HEAT TREAT	FINISH	DRAFT	CHECK	STRUCT.	MAT	APPROV.	ENG.

NAME LINER ASSEM
FUEL CELL-BAY #4-REAR-WING
CONSOLIDATED AIRCRAFT CORP. San Diego, Calif.

OPP. HAND

DWG. D SIZE 28G5164

LET	ALTERATION	DATE	BY
A	ADDED ADHESIVE TAPE & SHEET-RUB TO DWG.	11-7-41	Vogt
B	ADDED SPOTWELD NOTE. NEG. WT. CHG.	6-18-42	[illegible]

STENCIL WITH 1" HIGH LETTERS:
"5 LINER-REAR-L.H." (ON PART 2865165-L) E.O.
"5 LINER-REAR-R.H." (ON PART 2865165-R)

$35\frac{5}{8}{}^{+0}_{-\frac{1}{16}}$

$2\frac{3}{4}$

(B) ALL DETAILS TO BE TACK RIVETED AT EACH CORNER & SPOTWELD TO MAIN SHEET AT APPROX $\frac{7}{8}$ SPACING.

2865160

(A) 1" WIDE ADHESIVE TAPE (TYP. EXCEPT AS NOTED) OVER FREE EDGES & RIVETS

(A) 2" WIDE ADHESIVE TAPE OVER -9 & -10

-10 -9 C C

$3\frac{1}{4}$

$2\frac{7}{16}$

B B

$\frac{1}{8}$

$10\frac{1}{8}$

$12\frac{11}{16}$

A A

-8(REF.)

-7(REF.)

2" ADHESIVE TAPE

-9(REF.)

SECTION C-C
SCALE 12"=1'-0"

NOTE- CEMENT NEOPRENE STRIPS SECURELY BEFORE ADDING TAPE. SHELLAC OVER TAPE

NOTE: FINISH 2-2P (-6 & -7)

2865159

THIS EDGE TO BE IN LINE WITH 2865171 (REF)

2865171 (REF)

Q4305-D4

-6 PLATE

NOTE:
2865165 REPLACES 2865042-6 SUB ASS'Y.
USE 2865042-6L SUB ASS'Y. TO MAKE 2865165-L
" " -6R " " " " " " -R
2865165-6 IS IDENTICAL TO AND REPLACES 2865042-26
" -7 " " " " " " -36
" -8 " " " " " " -37

FINISH CODE	
Z	ANODIC TREATMENT
P	P-27 PRIMER
AP	ALUMINIZED PRIMER
C	CADMIUM PLATE

(A) 2865160 (REF.) 1" ADHESIVE TAPE -6(REF.)

SECTION B-B
12"=1'-0"
SHELLAC OVER TAPE

-7 SPOTWELD TO -6 $1\frac{1}{2}$ SPACING-APPROX.

$\frac{1}{4}$

CONT. CHG. "W"

-8 $\frac{1}{32} \times \frac{1}{2} \times 10\frac{1}{2}$ LONG NEOP. CEMENT TO -7

SECTION A-A
12"=1'-0"

ASSY. DASH NO.	MODEL	NEXT ASSY.	REQ.
-R	28-SMH-HA	2865042	1
-L	28-SMH-HA		1
-R	28-SME-HA		1
-L	28-SME-HA		1
-R	PBY-5A		1
-L	PBY-5A		1
	Q4305-D4		
-R	PBY-5		1
-L	PBY-5	2865042	1

REQUIREMENTS PER AIRPLANE

REPLACES 2865042-6 OR 92040 — CALC. WT.
REPLACED BY — ACT. WT.

LIMIT ON DIMENSIONS UNLESS OTHERWISE SPECIFIED ± 1/32 IF NOTED — SCALE 6"=1'-0" IF NOTED

STAMP PART NUMBER WHERE SHOWN

PART NO.	STOCK	MATERIAL	SPEC.	LH REQ.	RH REQ.	LH REQ.	RH REQ.	LH REQ.	RH REQ.	LH REQ.	RH REQ.	LH REQ.	RH REQ.
				-0		-2		-3		-4		-5	
		1" X 1½ FT.	ADHESIVE TAPE	1	1								
		2" X 1½ FT.	ADHESIVE TAPE	1	1								
Q4305-D4													
2865160				1	1								
2865159				1	1								
-10	33-175-20X3	NEOP (GOODRICH CO)	N-11	2	2								
-9	33-175-20X3	NEOP (GOODRICH CO)	N-A	1	1								
-8	1/32 X 1/2 X 10½	NEOPRENE	N-11	1	1								
-7	1/32-A [illegible]			1	1								
2865165-6	.051 X 12½ X 33½	5250 ALCLAD	QQ-A-318(A)	1	1								

PARTS LIST PER ASSY.

AC		REQ.					
NAVY NONE	NOTED	10-7-41					
HEAT TREAT	FINISH	DRAFT	CHECK	STRUCT	MAT	APPROV	ENG.

NAME LINER ASSEM
FUEL CELL-BAY #5 REAR-WING
CONSOLIDATED AIRCRAFT CORP. SAN DIEGO, CALIF.

OPP. HAND 2865165-R

DWG. SIZE D — 2865165

R

LET	ALTERATION	DATE	BY
A	-B WAS X-2-AIIT: -3 WAS X-2-AIIA	11-7-41	HILL
	ADDED ADHESIVE TAPE		
B	REMD. RIVETS SHOWN		
	ALONG EDGE OF 28G5151		
	ADDED TACK RIVET &		
	SPOTWELD NOTE. WT. CHG. NEG.	6-10-42	EME
C	3 DIM. WAS 4 DIM. & 5 5/16 DIM WAS		
	6 7/16 DIM. NO WT. CHG.	9-28-42	[illegible]

E.O. A38463A

STENCIL WITH 1" HIGH LETTERS:
"-1 LINER - FRONT L.H." (ON PART 28G5167)
"-1 LINER - FRONT R.H." (ON PART 28G5167-R)

SPOTWELD -7 TO -6 AT 2 INCH INTERVALS (APPROX); OVER FULL LENGTH.

COVER FREE EDGES WITH ADHESIVE TAPE SEE DETAIL "C"

28G5151

AN425D4 (3 RIVETS C'SINK THIS SIDE)

CUTOUT IN -6

Q4305D4

1/8 R

1R.

3

21

9 3/16

5 5/16

2 3/4

4 7/16

5 7/16

10 1/2

24 3/16

Q4305-D4 - TACK RIVETED ON EACH CORNER. 28G5151 SPOTWELDED TO MAIN SHEET SPACING TO BE APPROX 7/8

-10 NEOPRENE STRIP CEMENTED TO -7 (OVER FULL LENGTH)

1/4

6 5/8

1" WIDE ADHESIVE TAPE (OVER FREE EDGES & RIVETS)

28G5151 (REF.)

NOTE: SHELLAC OVER TAPE

-6 (REF.)

DETAIL C (A)

28G5151 (REF.)

-6 REF.)

-9 (REF.)

-8 (REF.)

SECTION B-B (SCALE 12"-1'-0")

FINISH: Z-2P (-6,-7,-8,-9)

JOGGLE ENDS -9 (REF.)

28G5151 (REF.)

-6 (REF.)

SECTION A-A (SCALE 12"-1'-0")

RUSH RELEASED 11-24-41

-R	28-5MN.AMN	28G5042	1
-L	28-5MN.AMN		1
-R	PBY-5A		1
-L	PBY-5A		1
-R	28-5MA.ME		1
-L	28-5MA.ME		1
-R	PBY-5		1
-L	PBY-5	28G5042	1

ASSY. DASH NO. | MODEL | NEXT ASSY. | REQ.

REQUIREMENTS PER AIRPLANE

REPLACES 28G5042-15 SUB ASS'Y CALC. WT.

REPLACED BY ACT. WT.

LIGHT GA. DIMENSIONS UNLESS OTHERWISE SPECIFIED ± 1/32 | SCALE 3"-1'-0" (EXCEPT AS NOTED)

STAMP PART NUMBER WHERE SHOWN

PART No.	STOCK	MATERIAL	SPEC.	LH REQ.	RH REQ.	LH REQ.	RH REQ.	LH REQ.	RH REQ.	LH REQ.	RH REQ.	LH REQ.	RH REQ.
Q4305D4													
AN425D4													
	1" X 3 FEET	ADHESIVE	TAPE										
28G5151													
28G5167-10	1/32 X 1/2 X 20 1/8	NEOPRENE	N-11										
28G5167-9	K62440 X 6 1/2	AL AL	20A-35A(T)										
28G5167-8	K62440 X 6 1/2	AL AL	20A-35A(T)										
28G5167-7	Y36450 X 20 1/8												
28G5167-6	.051 X 21 1/2 X 24 3/8	52 S.D. R.M.	QQ-A-318(A)										

PARTS LIST PER ASSY.

-0 -2 -3 -4 -5

AC | | HILL | KAREL | | | | | | | | | | |

NAVY NOTED | NOTED | 10-6-41 | | | | | | | | | | | |

HEAT TREAT | FINISH | DRAFT | CHECK | STRUCT | MAT | APPROV | ENG.

OPP. HAND 28G5167-R

NAME LINER ASSEM. FUEL CELL-BAY #1 FRONT-WING

CONSOLIDATED AIRCRAFT CORP. SAN DIEGO, CALIF.

SIZE D | 28G5167

R

NOTE: 28G5167 REPLACES 28G5042-15 SUB-ASSEM.
USE 28G5042-15 SUB ASS'Y TO MAKE 28G5167
" " -15R " " " 28G5167-R.
(28G5167-6 IS IDENTICAL TO AND REPLACES 28G5042-25
(28G5167-7 " " " " 28G5042-44
(28G5167-10 " " " " 28G5042-45

FINISH CODE	
Z	ANODIC TREATMENT
P	P-27 PRIMER
AP	ALUMINIZED PRIMER
C	CADMIUM PLATE

LET	ALTERATION	DATE	BY

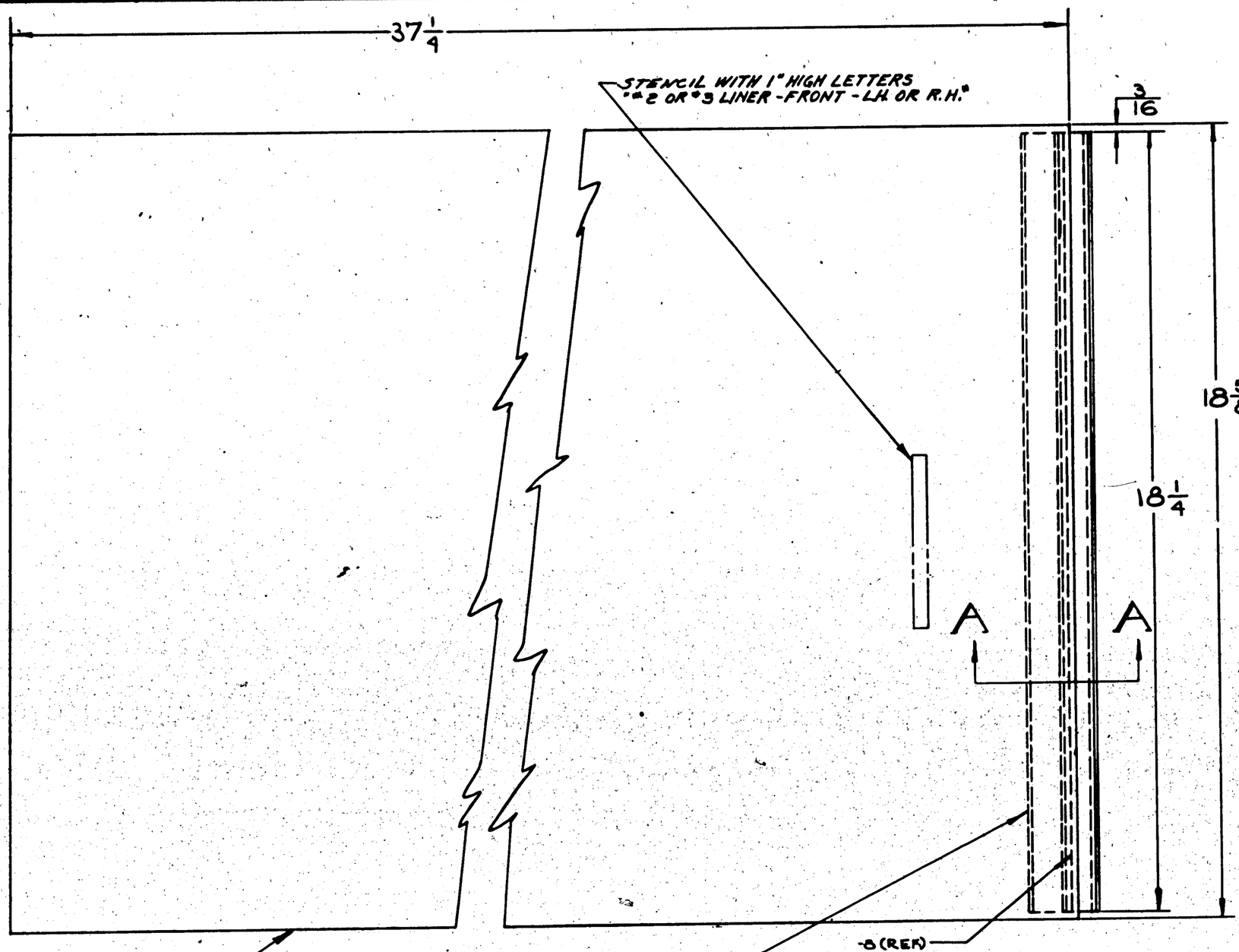

28G5168 IS IDENTICAL TO, AND REPLACES 28G5042-13
28G5168-6 " " " 28G5042-23
28G5168-7 " " " 28G5042-40
28G5168-8 " " " 28G5042-41

FINISH CODE	
Z	ANOD'C. TREATMENT
P	P-27 PRIMER
AP	ALUMINIZED PRIMER
C	CADMIUM PLATE

ASSY. DASH NO.	MODEL	NEXT ASSY.	REQ.
	28-5AMN	28G5042	4
	28-5MN		4
	28-5MA		4
	28-5ME		4
	28-5A		4
	P8Y-5	28G5042	4

REQUIREMENTS PER AIRPLANE

REPLACES 28G5042-13 OF 9-20-40 CALC. WT.

REPLACED BY ACT. WT.

UNLESS OTHERWISE SPECIFIED ± 1/32 — SCALE 6"-1'-0" & NOTED

STAMP PART NUMBER WHERE SHOWN

PART NO.	STOCK	MATERIAL	SPEC.	LH REQ. -0	RH REQ. -2	LH REQ. -3	RH REQ. -4	LH REQ. -5	RH REQ.
-8	1/32 X 1/2 X 18 1/4	NEOPRENE	N-11	1					
-7	Y-36A5 CUT TO LG.			1					
28G5168-6	.05 X 27 3/16 X 18 1/4	SAE 30 AN-VL	QQ-A-318(A)	1					

PARTS LIST PER ASSY.

AC		KAREL					
NAVY NONE	Z-2P	10-17-44					
HEAT TREAT	FINISH	DRAFT	CHECK	STRUCT	MAT	APPROV	ENG.

NAME LINER ASSEM.
FUEL CELL-BAY 2&3 FRONT-WING
CONSOLIDATED AIRCRAFT CORP. SAN DIEGO, CALIF.

OPP. HAND

DWG. SIZE D — 28G5168

R

LET	ALTERATION	DATE	BY
A	ADDED -9 & -10 NEOPRENE CHANNEL & ADHESIVE TAPE	11-7-41	HILL
B	28G5157-L(1) & 28G5157-R(1) WAS 28G5157(2) NO WT. CHG.	11-12-41	GRAY

STENCIL WITH 1" HIGH LETTERS "4 LINER - FRONT L.H. OR R.H."

$30\frac{3}{8}{}^{+0}_{-1/16}$

$2\frac{3}{4}$

$\frac{1}{8}$

25

$25\frac{1}{4}$

28G5164 (REF.)

SEE DETAIL "C" FOR ADDITIONAL ADHESIVE TAPE - TO BE ADDED BEFORE SHELLACING ALL TAPE

(B) 28G5157L

$8\frac{5}{16}$

-10

-9

B

$3\frac{5}{16}$

28G5158

(A)

-10

B

-9

(A)

$3\frac{5}{16}$

(B) 28G5157R

2" STRIPS OF ADHESIVE TAPE OVER -9 AND ALONG EDGES OF MATERIAL AS SHOWN (SEE SECTION B-B)

$8\frac{5}{16}$

Q4305-D4 RIVETS SPACE AS SHOWN

THIS EDGE TO ALIGN WITH 28G5164 (REF.)

SECTION B-B (SCALE 12"-1'-0")

-9 (REF.)

-6 (REF.)

28G5158 (REF.)

ADHESIVE TAPE (REF.)

-9 (REF.)

FINISH CODE	
Z	ANODIC TREATMENT
P	P 27 PRIMER
AP	ALUMINIZED PRIMER
C	CADMIUM PLATE

NOTE: 28G5170 REPLACES 28G5042-12 SUB-ASSEM.

28G5170-6 IS IDENTICAL TO & REPLACES 28G5042-22
28G5170-7 " " " " 28G5042-38
28G5170-8 " " " " 28G5042-39

RUSH RELEASED 10-24-41

-7

-6

SPOTWELD -7 TO -6 SPACING APPROX

$\frac{1}{4}$

-8

1/32 x 1/2 x 25 NEOP. (CEMENT TO -7)

SECTION A-A
12" = 1'-0"

SYM

28G5158 (REF.)

1" WIDE ADHESIVE TAPE OVER FREE EDGES & RIVETS

-6 (REF.)

CONT. CHG. W

28G5157 (REF.)

A DETAIL C

ASSY. DASH NO.	MODEL	NEXT ASSY.	REQ'D.
—	28-3AMN	28G5042	2
—	28-3MA	—	2
—	28-3ME	—	2
—	28-3MN	—	2
—	PBY-5A	—	2
—	PBY-5	28G5042	2

REQUIREMENTS PER AIRPLANE

REPLACES 28G5042-12 DFG-10-40 — CALC. WT.

REPLACED BY — ACT. WT.

LIGHT OR SHADOWING UNLESS OTHERWISE DESIGNATED ± 1/32 UNLESS NOTED — SCALE 3"=1'-0" UNLESS NOTED

STAMP PART NUMBER WHERE SHOWN

PART No.	STOCK	MATERIAL	SPEC.	LH REQ.	RH REQ.	LH REQ.	RH REQ.	LH REQ.	RH REQ.	LH REQ.	RH REQ.	LH REQ.	RH REQ.
				-0		-2		-3		-4		-5	
—	28G5042-12 SUB ASSY.			1									
—	24305-D4			2									
—	28G5157L												
—	28G5158												
—	28G5157R												
—	2" X 1'	ADHESIVE	TAPE	1									
—	1" X 3 FEET	ADHESIVE	TAPE	1									
28G5170-10	*33-175-20 x 3	NEOP. (GOODRICH CO.)	N-11	2									
28G5170-9	*33-175-20 x 5	NEOP. (GOODRICH CO.)	N-11	4									
28G5170-8	1/32 x 1/2 x 25 1/8	NEOPRENE	N-11	1									
28G5170-7	Y36A50M25 1/8			1									
28G5170-6	.051 x 25 1/8 x 30 1/2	52SOALM	QQ-A-311B(A)	1									

PARTS LIST PER ASSY.

AC		KAISER					
NAVY NONE	2-2P (6&7)	10-18-41					
HEAT TREAT	FINISH	DRAFT	CHECK	STRUCT	MAT	APPROV	ENG.

NAME LINER ASSEM.
FUEL CELL-BAY #4-FRONT-WING
CONSOLIDATED AIRCRAFT CORP. SAN DIEGO, CALIF.

OPP. HAND

SIZE D — 28G5170

R

NOTE: 28G5170 REPLACES 28G5042-12 SUB ASS'Y.
USE 28G5042-12 SUB ASS'Y TO MAKE 28G5170

LET	ALTERATION	DATE	BY
A	ADDED ADHESIVE TAPE & -9 NOTES TO DWG & B/M		

STENCIL WITH 1" HIGH LETTERS
"#5 LWER-FRONT-L.H." (ON PART 28G5171)
"#5 LINER-FRONT-R.H." (ON PART 28G5171-R)

$30\frac{3}{8}{}^{+0}_{-\frac{1}{16}}$

28G5159 (REF.)

(A) 2" WIDE STRIP OF ADHESIVE TAPE OVER -9 (SEE SECTION B-B) SHELLAC EXTERIOR

$2\frac{9}{16}$

3

B B

(-9)

DRILL FOR AS033AB-6 (P.K. SCREWS)

28G5165-6 (REF.)

28G5160 (REF.)

A A

$12\frac{11}{16}$

$10\frac{1}{8}$

$\frac{1}{8}$

-9 (REF.) CEMENT TO -6 — ADHESIVE TAPE (REF.) — -6 (REF.)

SECTION B-B (SCALE 12"=1'-0")

28G5171 REPLACES 28G5042-11 (SUB ASS'Y)
(USE 28G5042-11 TO MAKE 28G5171)
(USE 28G5042-11R. TO MAKE 28G5171-R.)

28G5171-6 IS IDENTICAL TO, AND REPLACES 28G5042-21
28G5171-7 " " " " 28G5042-36
28G5171-8 " " " " 28G5042-37

FINISH CODE	
Z	ANODIC TREATMENT
P	P-27 PRIMER
AP	ALUMINIZED PRIMER
C	CADMIUM PLATE

RUSH RELEASED 10-24-41

NOTE: FINISH -6 & -7 Z-2P

(-6)

(-7) SPOT WELD TO -6 2 SPACING

-8 (REF)

4

CONT. CHG "W"

SECTION A-A
12" = 1'-0"

(-8) $\frac{1}{32} \times \frac{1}{2} \times 10\frac{1}{8}$ LONG NEOP. CEMENT TO -7

ASSY. DASH NO.	MODEL	NEXT ASSY.	REQ.
-R	28-5MN-MN	28G5042	1
-L	28-5MN-MN		1
-R	28-5ME-MA		1
-L	28-5ME-MA		1
-R	PBY-5A		1
-L	PBY-5A		1
-L	PBY-5		1
-R	PBY-5	28G5042	1

REQUIREMENTS PER AIRPLANE

REPLACES 28G5042-11 OF 9-20-40 CALC. WT.

REPLACED BY ACT. WT.

LIGHT OR DIMENSIONS UNLESS OTHERWISE SPECIFIED ± 1/32 & NOTED

SCALE 6"=1'-0" & NOTED

STAMP PART NUMBER WHERE SHOWN

PART NO.	STOCK	MATERIAL	SPEC.	LH REQ. -0	RH REQ. -0	LH REQ. -2	RH REQ. -2	LH REQ. -3	RH REQ. -3	LH REQ. -4	RH REQ. -4	LH REQ. -5	RH REQ. -5
	2"X3"	ADHESIVE TAPE		1	1								
-9	*33-175-20X3	NEOP (GOODRICH CO.)	N-11	1	1								
-8	1/32 X 1/2 X 10 1/8	NEOPRENE	N-11	1	1								
-7	Y56A5087 X 10 1/8			1	1								
28G5171 -6	.051 X 12 3/4 X 30 1/2	52S0ALM.	QQ-A-250/4	1	1								

PARTS LIST PER ASSY.

AC							
NAVY NONE	NOTED	KARL					
HEAT. TREAT	FINISH	DRAFT	10-18-41 CHECK	STRUCT	MAT	APPROV	ENG.

NAME LINER ASSEM.
FUEL CELL-BAY #5 FRONT-WING

OPP. HAND 28G5171-R

CONSOLIDATED AIRCRAFT CORP. SAN DIEGO, CALIF.

SIZE D

28G5171

R

LET	ALTERATION	DATE	BY
A	REDRAWN TO ½ SCALE, ADDED (2) 3 DIA HOLES, ADDED -17 TO -20 INCL.	4-7-41	Unger
B	RELOCATED STIFFENERS CHANGED CORNER CUT-OUTS REDIMENSIONED	12-9-41	LC Bass

STENCIL WITH 1" HIGH LETTERS:
" "1 BAY-REAR-L.H." (ON PART 28G5172)
" "1 BAY-REAR-L.H." (ON PART 28G5172-R)

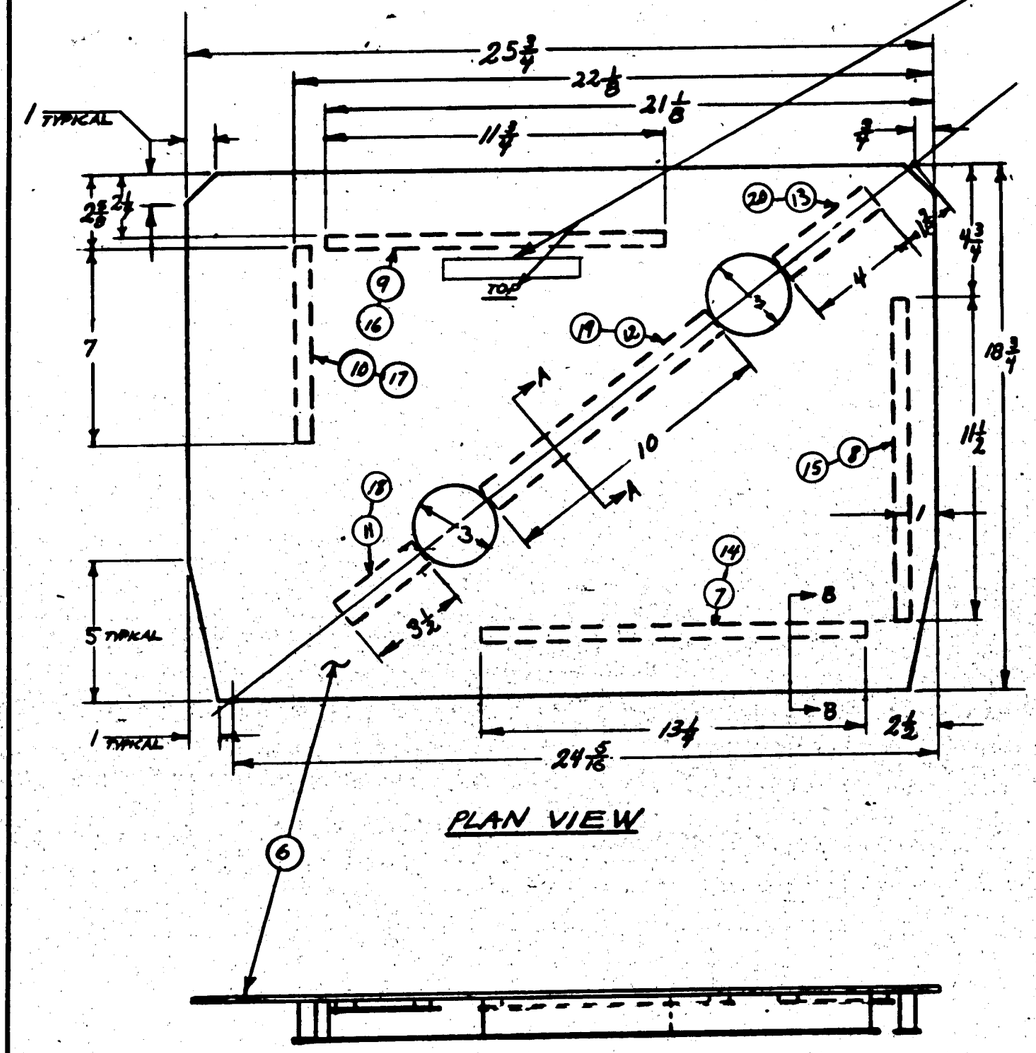

PLAN VIEW

SIDE VIEW

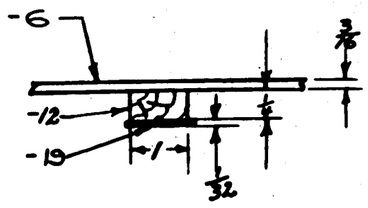

VIEW A-A
SCALE 6" = 1'-0"

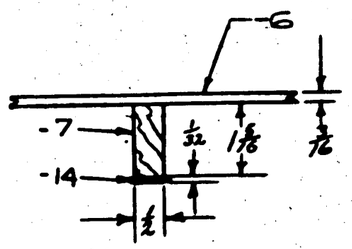

VIEW B-B
SCALE 6" = 1'-0"

NOTES
1. SMOOTH EDGES OF -6 TO PREVENT CHAFING OF CELLS.
2. LEGS TO BE GLUED AND NAILED WITH AN300-18-4 BRADS, SPACED 1½" APART.
3. FINISH: SAND ALL SURFACES AND THEN APPLY 3 COATS OF SHELLAC ALL OVER.
4. NEOPRENE TO BE CEMENTED TO BOTTOM STIFFENERS AND FILLER STRIP AFTER PLATE HAS BEEN FINISHED.

ASSY. DASH NO.	MODEL	NEXT ASSY.	REQ.
-R	28-5MK, AMN	28G5042	1
-L	28-5MK, AMN		1
-R	28-5MK, MA		1
-L	28-5MK, MA		1
-R	PBK-5, 5A		1
-L	PBK-5, 5A	28G5042	1

CONT. CHG "W"

REQUIREMENTS PER AIRPLANE

REPLACES 28G513 AF 6-42-1 CALC. WT.
REPLACED BY ACT. WT.

UNLESS OTHERWISE SPECIFIED ± 1/32 SCALE 3/16"=1'-0" & NOTED

STAMP PART NUMBER WHERE SHOWN

PART NO.	STOCK	MATERIAL	SPEC.	-0 REQ.	-2 REQ.	-3 REQ.	-4 REQ.	-5 REQ.
				LH RH	LH RH	LH RH	LH RH	LH RH
AN300-18-4	BRADS							
-20	1/32 x 1 1/4 x 4 1/8	NEOPRENE	N-4	1 1				
-19	1/32 x 1 1/4 x 10 1/8			1 1				
-18	1/32 x 1 1/4 x 3 3/8			1 1				
-17	1/32 x 3/4 x 7 1/8			1 1				
-16	1/32 x 3/4 x 11 7/8			1 1				
-15	1/32 x 3/4 x 11 5/8			1 1				
-14	1/32 x 3/4 x 13 3/8			1 1				
-13	1/4 x 1 x 4 1/8	SPRUCE	COMM.	1 1				
-12	1/4 x 1 x 10 1/8			1 1				
-11	1/4 x 1 x 3 3/8			1 1				
-10	1/2 x 13/16 x 7 1/8			1 1				
-9	1/2 x 15/16 x 11 7/8			1 1				
-8	1/2 x 15/16 x 11 5/8			1 1				
-7	1/2 x 1 7/16 x 13 3/8			1 1				
-6	3/16 x 19 x 26	PLYWOOD	COMM.	1 1				

PARTS LIST PER ASSY.

AC
NAVY NONE — NOTED — U.S. NO. — DRAFT: K. VOTAW — CHECK: KAREL — STRUCT — MAT — APPROV — ENG
HEAT TREAT — FINISH

NAME SUPPORT PLATE - REAR SPAR - "1 BAY - WING
OPP. HAND 28G5172-R
CONSOLIDATED AIRCRAFT CORP. SAN DIEGO, CALIF.
DWG. D SIZE — 28G5172

LET	ALTERATION	DATE	BY
A	ADDED 3 DIA. CUTOUTS & CHG'D -11 TO -11C-12.	4-7-41	KAGEL
B	TRIMMED BOTH SIDES OF BOTTOM EDGE OF SUPPORT PLATE. ADDED DIM 4 & 9/16	9-25-41	THALER

E.O. A14351

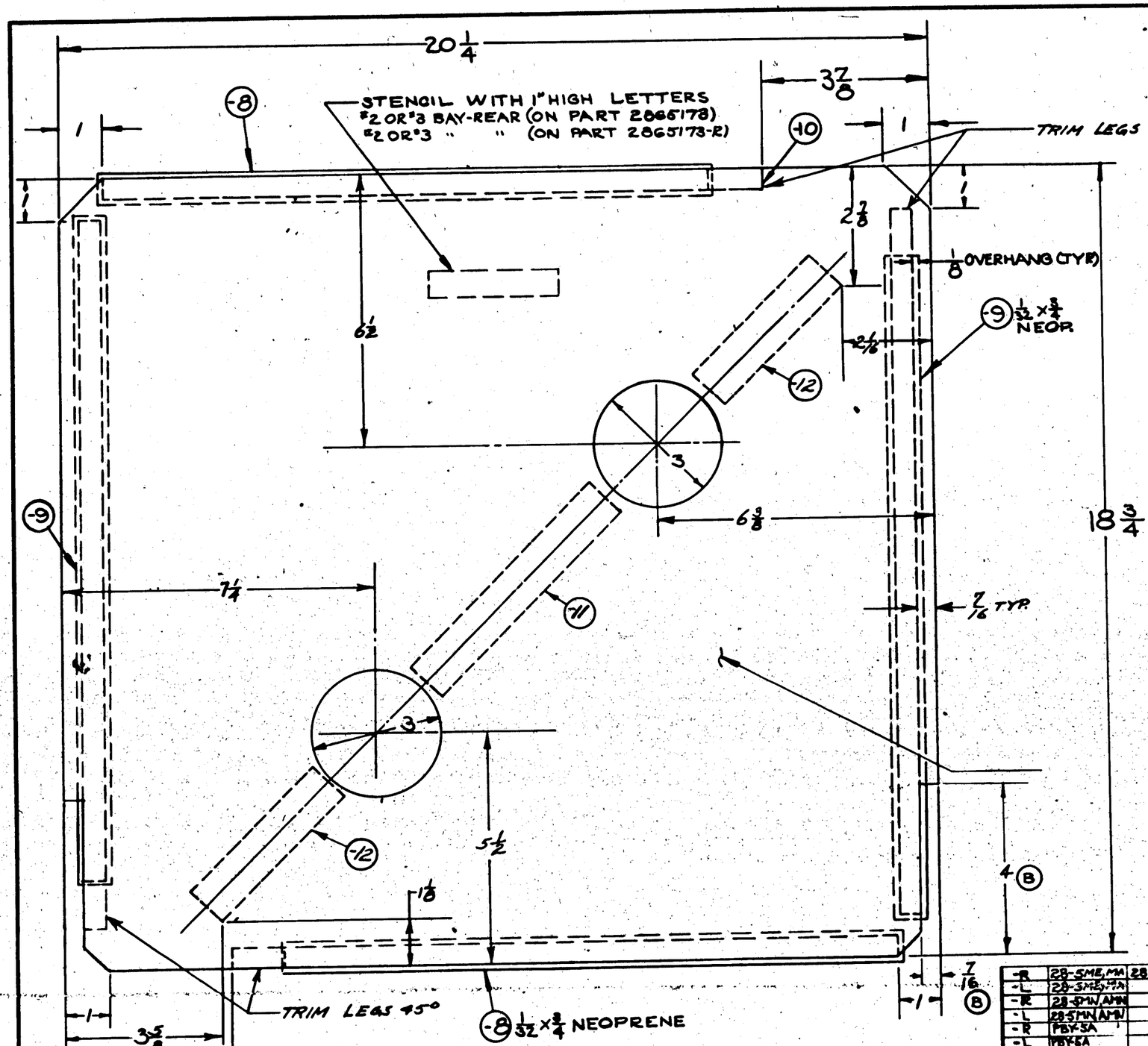

NOTE:
1. SMOOTH EDGES OF -6 TO PREVENT CHAFING OF CELLS.
2. LEGS TO BE GLUED & NAILED WITH AN300-18-4 BRADS - 1½ SPACING (APPROX)
3. FINISH: SAND ALL SURFACES AND APPLY 3 COATS SHELLAC (ALL OVER)
4. NEOPRENE TO BE CEMENTED ON AFTER PLATES ARE FINISHED.

ASSY. PARTS No.	MODEL	NEXT ASSY.	REQ.
-R	28-5ME, MM	28G5042	2
-L	28-5ME, MM-A		2
-R	28-5MN, AMN		2
-L	28-5MN, AMN		2
-R	PBY-5A		2
-L	PBY-5A		2
-R	PBY-5B		2
-L	PBY-5B		2
-R	PBY-5-5A		2
-L	PBY-5-5A	28G5042	2

REQUIREMENTS PER AIRPLANE

REPLACES 28G5135 OF 9-20-41 — CALC. WT.
REPLACED BY — ACT. WT.

UNLESS OTHERWISE SPECIFIED ± 1/32 — SCALE 6" = 1'-0"

STAMP PART NUMBER WHERE SHOWN

PART No.	STOCK	MATERIAL	SPEC.	LH REQ. -0	RH REQ. -0	LH REQ. -2	RH REQ. -2	LH REQ. -3	RH REQ. -3	LH REQ. -4	RH REQ. -4	LH REQ. -5	RH REQ. -5
AN300-18-4	BRADS												
-12	1/32 x 1 x 3 1/8	NEOPRENE	N-11	2	2								
-11	1/32 x 1 x 6	NEOPRENE	N-11	1	1								
-10	1/2 x 1 1/8 x 15 1/2	SPRUCE	COMM	2	2								
-9	1/32 x 3/4 x 6 3/4	NEOPRENE	N-11	2	2								
-8	1/32 x 3/4 x 14 3/4	NEOPRENE	N-11	2	2								
-7	1/2 x 1 1/8 x 15 1/2	SPRUCE	COMM	2	2								
28G5173-6	3/16 x 18 3/4 x 20 3/4	PLYWOOD	COMM	1	1								

PARTS LIST PER ASSY.

AC		KAGEL 8-18-41					
NAVY NONE	NOTED	DRAFT	CHECK	STRUCT	MAT	APPROV	ENG.
HEAT TREAT	FINISH					9/11-41	

NAME SUPPORT PLATE
REAR SPAR-"2 & 3 BAY-WING

OPP. HAND 28G5173-R

CONSOLIDATED AIRCRAFT CORP. SAN DIEGO, CALIF.

DWG. D SIZE — 28G5173

R1

LET	ALTERATION	DATE	BY
A	ADD (2) 3" DIA. HOLES	11-7-41	HILL
	SHORTENED -11 & ADDED -12		
B	TRIMMED BOTH SIDES OF BOTTOM		
	EDGE OF SUPPORT PLATE ADDED		
	DIM. 4 1 7/16.	3-25-42	Trusler
C	RELOCATED -12(2), -11(1), & 90A.		
	HOLES(2).	3-25-42	Trusler

E.O.A 14351

E.O.A 22463

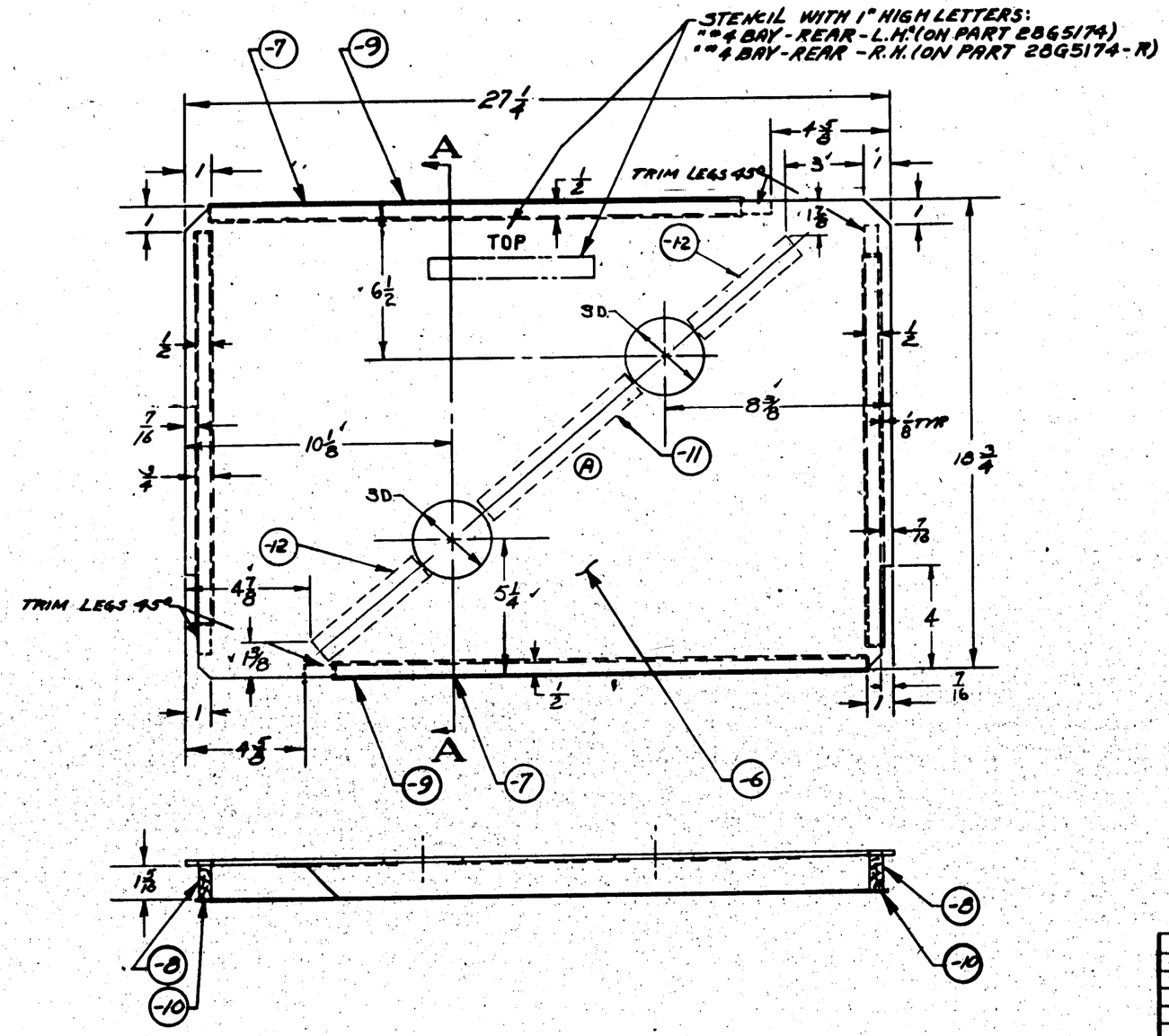

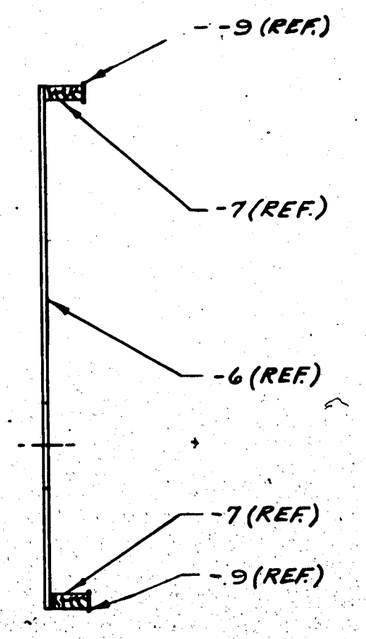

SECTION A-A

NOTE:
1. SMOOTH EDGES OF -6 TO PREVENT CHAFING OF CELLS.
2. LEGS TO BE GLUED AND NAILED WITH BRADS, AN300-18-4 SPACED 1½ APART.
3. FINISH: SAND ALL SURFACES AND APPLY 3 COATS OF SHELLAC ALL OVER.
4. NEOPRENE TO BE CEMENTED TO BOTTOM OF LEGS AFTER PLATES ARE FINISHED.

CONT. CHG. "W"

-R	28-SAMM	28G5042	1
-L	28-SAMM	28G5042	1
-R	28-SMN	28G5042	1
-L	28-SMN	28G5042	1
-R	28-SMA	28G5042	1
-L	28-SMA	28G5042	1
-R	28-SME	28G5042	1
-L	28-SME	28G5042	1
-R	PBY-5A	28G5042	1
-L	PBY-5A	28G5042	1
-R	PBY-5	28G5042	1
-L	PBY-5	28G5042	1

ASSY. DASH No.	MODEL	NEXT ASSY.	REQ.

REQUIREMENTS PER AIRPLANE

REPLACES 28G5136 6-12-41 — CALC. WT.

REPLACED BY — ACT. WT.

LIGHT ON BLUEPRINTING UP TO AND INCLUDING ± 1/32 — SCALE 3" = 1'-0"

STAMP PART NUMBER WHERE SHOWN

PUSH RELEASED 10-24-41

PART No.	STOCK	MATERIAL	SPEC.	-0 LH	-0 RH	-2 LH	-2 RH	-3 LH	-3 RH	-4 LH	-4 RH	-5 LH	-5 RH
AN300-18-4	BRADS												
-12	1/32 x 1 x 5	NEOPRENE	N-11	2	2								
-11	1/32 x 1 x 7 1/2	NEOPRENE	N-11	1	1								
-10	1/32 x 3/4 x 16	NEOPRENE	N-11	2	2								
-9	1/32 x 3/4 x 20 3/16	NEOPRENE	N-11	2	2								
-8	1/8 x 1 1/8 x 18 5/8	SPRUCE	COMM.	2	2								
-7	1/8 x 1 1/2 x 21 3/4	SPRUCE	COMM.	2	2								
-6	3/16 x 13 3/16 x 27 3/16	PLYWOOD	COMM.	1	1								

PARTS LIST PER ASSY.

AC		Kymas	KAKE	JFR	Klein	
NAVY NONE	NOTED	10-24-41			11-8-41	
HEAT TREAT	FINISH	DRAFT	CHECK	STRUCT	MAT	APPROV	ENG.

NAME SUPPORT PLATE — REAR SPAR - "4 BAY - WING

OPP. HAND 28G5174-R

CONSOLIDATED AIRCRAFT CORP. SAN DIEGO, CALIF.

DWG. SIZE D — 28G5174

R

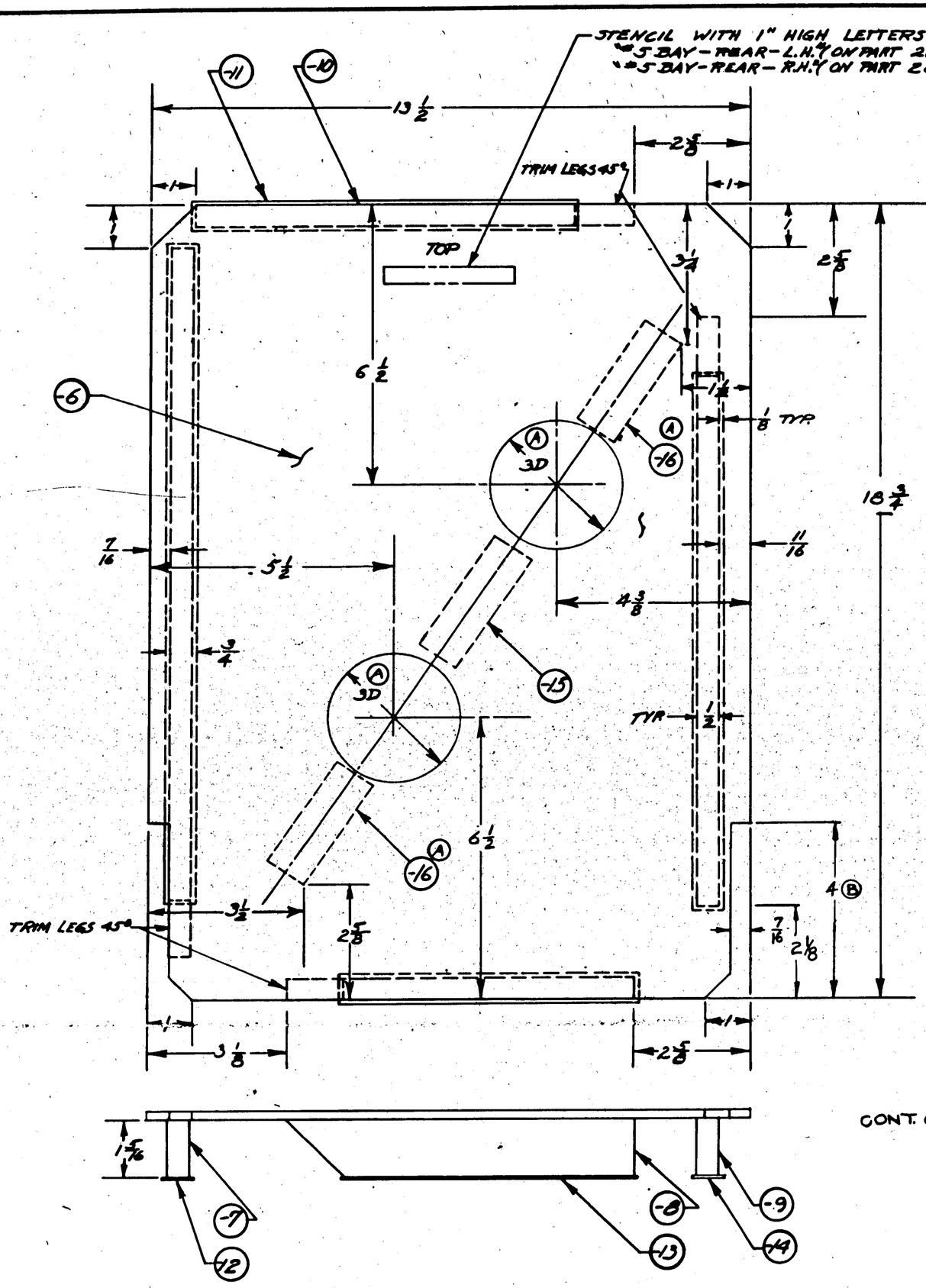

LET	ALTERATION	DATE	BY
A	ADDED 3 D Hole (2 PLACES) 6-16	4-7-41	Vogt
B	TRIMMED BOTH SIDES OF BOTTOM EDGE OF SUPPORT PLATE. ADDED DIM. 4 1 7/16.	3-25-42	Turner

E.O.A 14357

NOTE:
1. SMOOTH EDGES OF -6 TO PREVENT CHAFING OF CELL.
2. LEGS TO BE GLUED AND NAILED WITH BRADS, AN 300-18- , SPACED 1½ APART.
3. FINISH: SAND ALL SURFACES THEN APPLY 3 COATS SHELLAC ALL OVER.
4. NEOPRENE TO BE CEMENTED TO BOTTOM OF LEGS AFTER PLATES ARE FINISHED

ASSY. DASH NO.	MODEL	NEXT ASSY.	REQ.
-R	28-5AMN	2865042	1
-L	28-5AMN		1
-R	28-5MN		1
-L	28-5MN		1
-R	28-5MA		1
-L	28-5MA		1
-R	28-5ME		1
-L	28-5ME		1
-R	PBY-5 5A		1
-L	PBY-5 5A	2865042	1

REQUIREMENTS PER AIRPLANE

REPLACES 2865137 6-12-41 CALC WT.
REPLACED BY ACT. WT.

LIGHT OR SHRINKAGE ALLOWANCE OTHERWISE SPECIFIED ± 1/32

SCALE 6" = 1'-0"

STAMP PART NUMBER WHERE SHOWN

CONT. CHG. "W"

PART NO.	STOCK	MATERIAL	SPEC.	LH REQ.	RH REQ.	LH REQ.	RH REQ.	LH REQ.	RH REQ.	LH REQ.	RH REQ.	LH REQ.	RH REQ.
	AN 300-18-4 BRADS												
-16	1/32 x 1 x 2 3/4	NEOPRENE	N-11										
-15	1/32 x 1 x 3												
-14	1/32 x 3/4 x 13 1/4												
-13	1/32 x 1/4 x 9												
-12	1/32 x 3/4 x 16												
-11	1/32 x 3/4 x 9 1/8	NEOPRENE	N-11										
-10	3/8 x 1 1/2 x 10	SPRUCE	COMM.										
-9	3/4 x 1 1/2 x 14 1/4												
-8	3/4 x 1 1/2 x 7 1/8												
-7	3/4 x 1 1/2 x 16 1/8	SPRUCE											
-6	1/16 x 18 7/8 x 13 1/4	PLYWOOD	COMM.										

PARTS LIST PER ASSY.

AC		Vogt			
NAVY None	NOTED	10-11-41			
HEAT TREAT	FINISH	DRAFT	CHECK	STRUCT.	MAT	APPROV	ENG.

NAME SUPPORT PLATE - REAR SPAR - #5 BAY - WING

OPP. HAND 2865175-R

CONSOLIDATED AIRCRAFT CORP. SAN DIEGO, CALIF.

SIZE D

2865175

LET	ALTERATION	DATE	BY
A	ADDED NOTE #2 & CHGD		
	OPP HAND FROM 28G5176-R TO -L	12-31-41	BRZOWSKI
B	2 9/16 WAS 2 5/16, 18 15/16 WAS 18 7/16, 2 3/16 WAS 2 1/2, 8 11/16 WAS 8 5/8, 2 3/16 WAS 2 1/2, 29 7/16 WAS 29 1/16 REMOVED 30°	2-12-42	Upson
	ADDED 5 9/16 DIM.		

EQA-20334

STENCIL IN 1" HIGH LETTERS:
"#1 BAY-FRONT-RH" (PART 28G5176-R)
"#1 BAY-FRONT-LH" (PART 28G5176-L)

TOP

A — A

B — B

SECTION A-A

SECTION B-B

TYPICAL EXCEPT AS DESIGNATED

1/8 BEND RADII (TYPICAL)

45° (TYPICAL EXCEPT AS DESIGNATED)

CONT. CHG. "W"

FINISH CODE	
Z	ANODIC TREATMENT
P	P-27 PRIMER
AP	ALUMINIZED PRIMER
C	CADMIUM PLATE

1. THIS PART IDENTICAL TO & REPLACES 28G5042-51
2. PART SHOWN IS FOR R.H. SIDE

L&R	28-SAMN	28G5042	1 EA.
L&R	28-SMA.MN		1 EA.
L&R	28-SME		1 EA.
L&R	PBY-5A		1 EA.
L&R	PBY-5	28G5042R	1 EA.

ASSY. BASIS REQ. | MODEL | NEXT ASSY. | REQ.

REQUIREMENTS PER AIRPLANE

REPLACES 28G5042-51 CALC. WT.

REPLACED BY ACT. WT.

UNLESS OTHERWISE SPECIFIED DIMENSIONS ± 1/32 | SCALE 6"=1'-0"

STAMP PART NUMBER WHERE SHOWN

PART NO.	STOCK	MATERIAL	SPEC.	LH REQ. -0	RH REQ. -2	LH REQ. -3	RH REQ. -4	LH REQ. -5	RH REQ.
28G5176	05 1/2 x 22 1/4 x 27 5/8	52S9 AL. AL.	47A11-A						

PARTS LIST PER ASSY.

A.C.		HILL	KARG	JER				
NAVY NONE	Z-2P	10-22-41						
HEAT TREAT	FINISH	DRAFT.	CHECK	STRUCT.	MAT	APPROV	ENG.	

NAME SUPPORT PLATE - FUEL CELL BAY #1 - FRONT

OPP. HAND 28G5176-L

CONSOLIDATED AIRCRAFT CORP. SAN DIEGO, CALIF.

SIZE D | DWG. 28G5176

STENCIL IN 1" HIGH LETTERS AS FOLLOWS:
"2 BAY - FRONT - L.H." (PART 2065177-6L)
"2 BAY - FRONT - R.H." (PART 2065177-6R)
"3 BAY - FRONT - L.H" (PART 2065177-7L)
"3 BAY - FRONT - R.H" (PART 2065177-7R)

LET	ALTERATION	DATE	BY
A	IN B/P - -6 YR WAS -6; & -7 YR WAS -7. & ALL -6 & -7 DASH NO'S CHGD TO -6L4R & -7L4R	7/6/61	GRAY
B	ON VIEW - 19 5/8 WAS 19 3/4 - 2 3/4 WAS 2 1/8 - 1 3/32 WAS 1 1/8 1/2 WAS 1/2	3/12-62	[illegible]

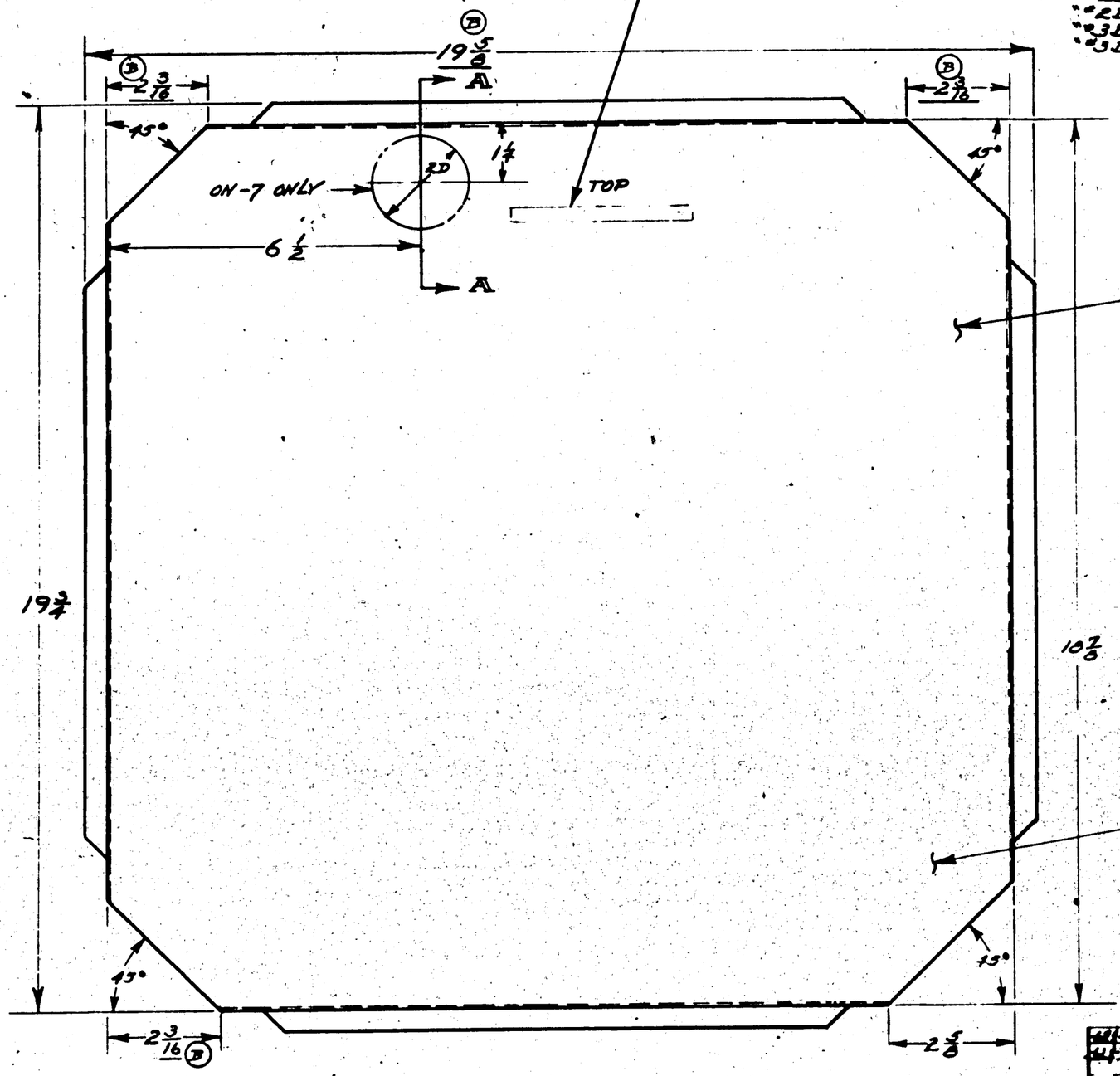

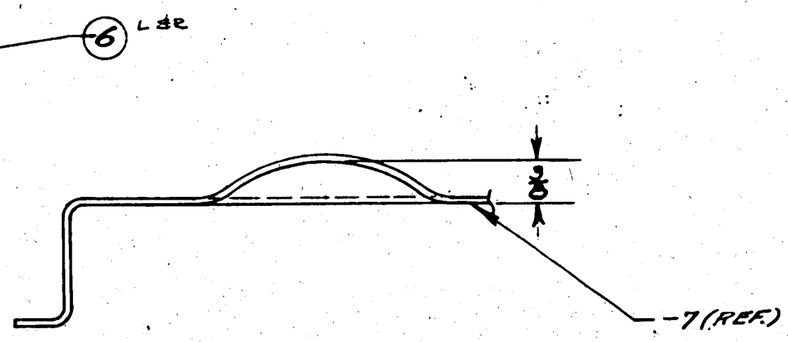

SECTION A-A (ROTATED 90°)
- FULL SIZE -
(-7 ONLY)

7 L&E

FINISH CODE	
Z	ANODIC TREATMENT
P	P-27 PRIMER
AP	ALUMINIZED PRIMER
C	CADMIUM PLATE

ASSY. DASH No.	MODEL	NEXT ASSY.	REQ.
-6R	30-SHK ASSY	2065042	1 EA.
-6L	30-SHK ASSY	2065042	1 EA.
-7R	20-SHK ASSY	2065042	1 EA.
-7L	20-SHK ASSY	2065042	1 EA.
-6R	BOLSTER	2065042	1 EA.
-6L	BOLSTER	2065042	1 EA.

REQUIREMENTS PER AIRPLANE

REPLACES 2065042-49L&R — CALC. WT.
REPLACED BY — ACT. WT.
SCALE 6 1-0"
STAMP PART NUMBER WHERE SHOWN

PART No.	STOCK	MATERIAL	SPEC.	LH REQ. -0	RH REQ. -2	LH REQ. -3	RH REQ. -4	LH REQ. -5	RH REQ.
-7R	.051 x 24 x 24	AL. ALLOY	QQ-A-318(A)	1					
-7L	.051 x 24 x 24	AL. ALLOY	QQ-A-318(A)		1				
-6R	.051 x 24 x 24	AL. ALLOY	QQ-A-318(A)			1			
-6L	.051 x 24 x 24	AL. ALLOY	QQ-A-318(A)				1		

PARTS LIST PER ASSY.

AC
NAVY NONE — HEAT TREAT
Z-2P — FINISH

	DRAFT	CHECK	STRUCT	MAT	APPROV	ENG.
Approved 10-29-40	KABEL	[illegible]	[illegible]	[illegible]	KA	[illegible]

NAME SUPPORT PLATE — FRONT SPAR - #2 & #3 BAY - WING
CONSOLIDATED AIRCRAFT CORP. SAN DIEGO, CALIF.
OPP. HAND 2065177-R
SIZE D — DWG. 2065177

THIS PART IS IDENTICAL TO & REPLACES 2065042-49

LET	ALTERATION	DATE	BY

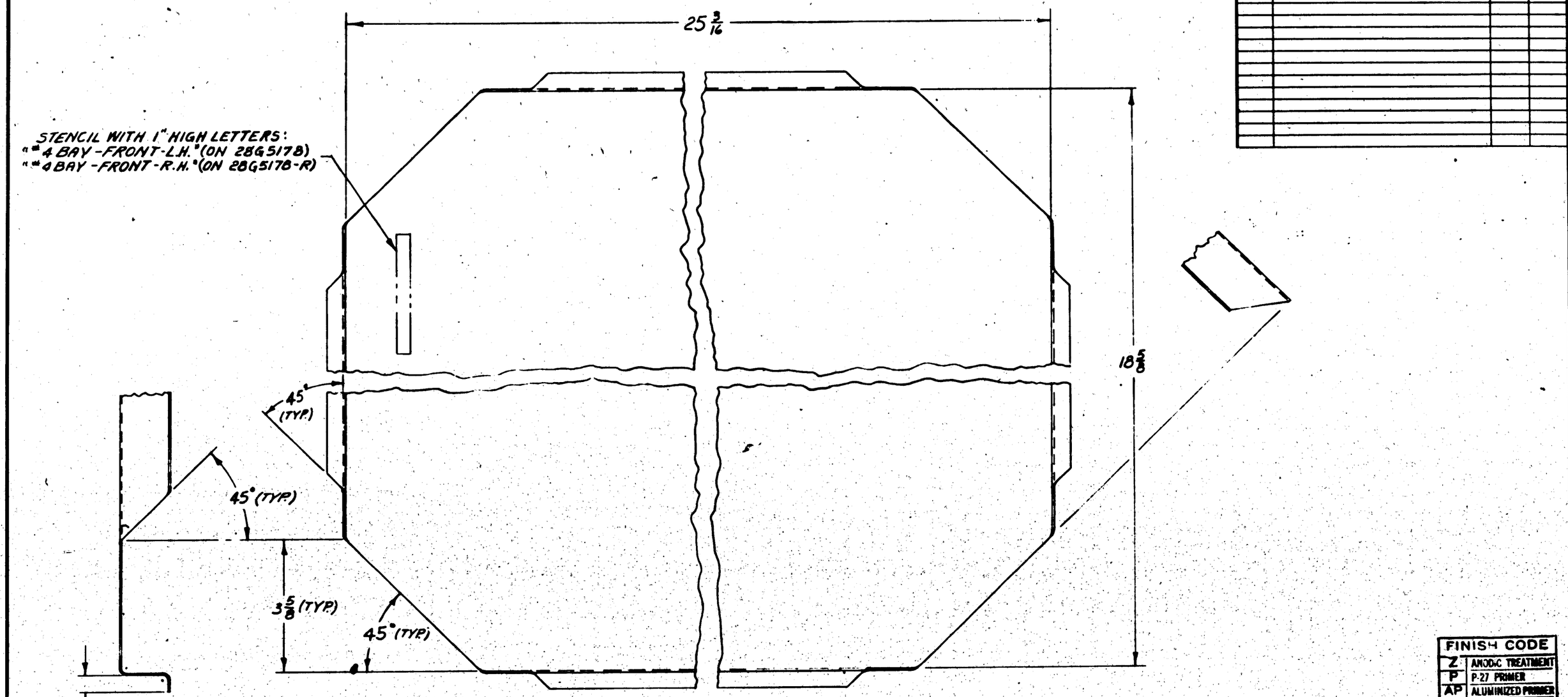

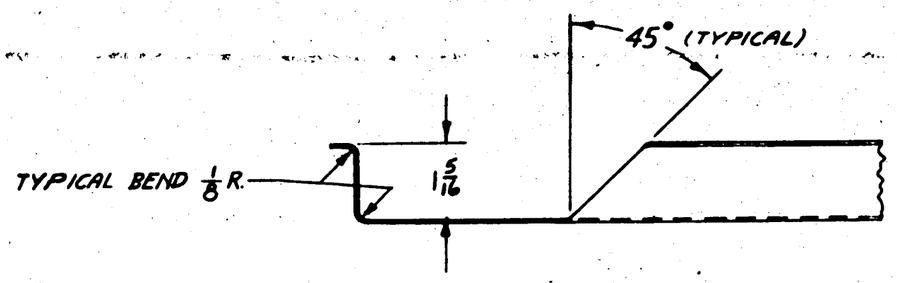

CONT. CHG. "W"

FINISH CODE	
Z	ANODIC TREATMENT
P	P-27 PRIMER
AP	ALUMINIZED PRIMER
C	CADMIUM PLATE

THIS DRAWING RUSH RELEASED 10-24-41

NOTE: THIS PART IS IDENTICAL TO & REPLACES 28G5042-48

ASSY. DASH NO.	MODEL	NEXT ASSY.	REQ.
-L&R	28-5AMN	28G5042	1 pr
-L&R	28-5MA.MM		1 pr
-L&R	28-5ME		1 pr
-L&R	PBY-5,5A	28G5042	1 pr

REQUIREMENTS PER AIRPLANE

REPLACES 28G5042-48 — CALC. WT.

REPLACED BY — ACT. WT.

UNLESS OTHERWISE SPECIFIED: ± 1/32 — SCALE 6" = 1'-0"

STAMP PART NUMBER WHERE SHOWN

PART NO.	STOCK	MATERIAL	SPEC.	LH REQ.	RH REQ.	LH REQ.	RH REQ.	LH REQ.	RH REQ.	LH REQ.	RH REQ.	LH REQ.	RH REQ.
28G5178	.051 x 82 1/4 x 28 7/8	52S0AL.AL	QQ-A-318(A)										
				-0		-2		-3		-4		-5	

PARTS LIST PER ASSY.

AC		HILL	KARG					
NAVY NONE	Z-2P	10-23-41	10-24-41			11-19-41		
HEAT TREAT	FINISH	DRAFT	CHECK	STRUCT.	MAT	APPROV	ENG.	

NAME SUPPORT PLATE - FUEL CELL BAY "4 - FRONT

OPP. HAND 28G5178-R

CONSOLIDATED AIRCRAFT CORP. SAN DIEGO, CALIF.

DWG. SIZE D — 28G5178

R

LET	ALTERATION	DATE	BY

STENCIL WITH "1 HIGH LETTERS:
"5 BAY - FRONT L.H." (ON 28G5178)
"5 BAY - FRONT R.H." (ON 28G5179-R)

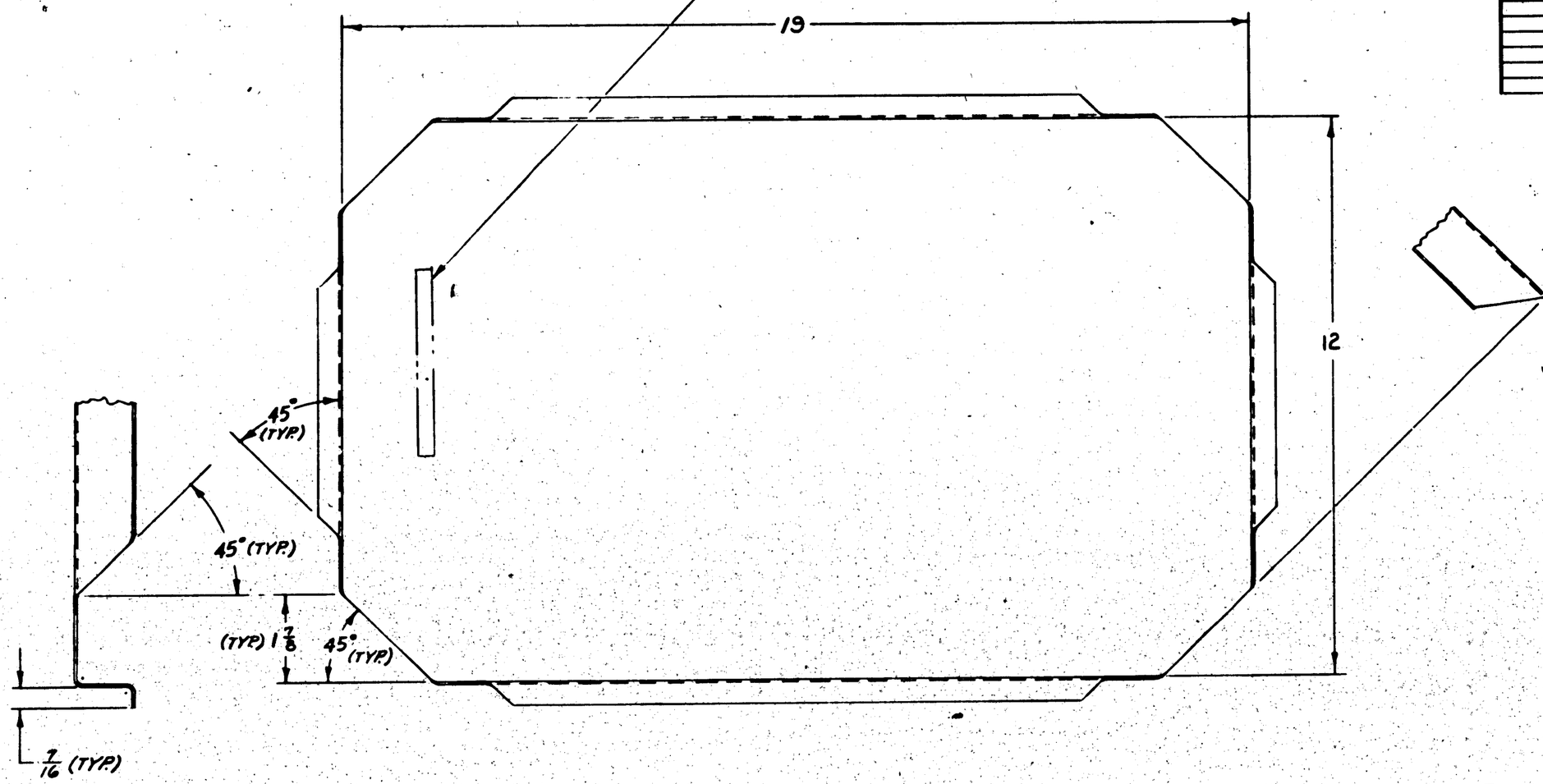

FINISH CODE	
Z	ANOD:C TREATMENT
P	P-27 PRIMER
AP	ALUMINIZED PRIMER
C	CADMIUM PLATE

THIS DRAWING RUSH RELEASED 10-24-41

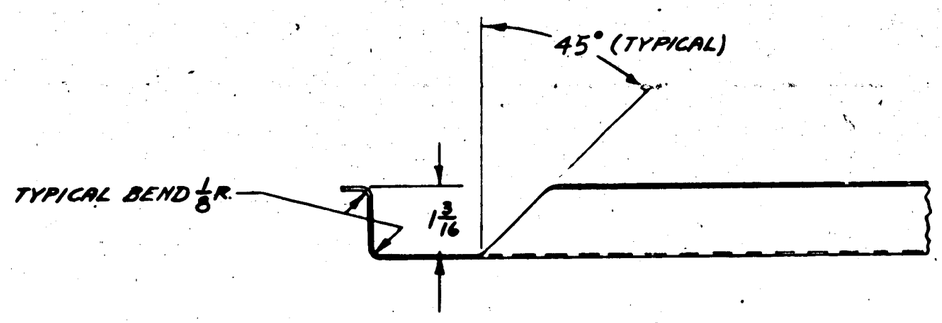

CONT. CHG. W°

NOTE: THIS PART IS IDENTICAL TO & REPLACES 28G5042-47

ASSY DASH NO.	MODEL	NEXT ASSY.	QTY.
-L&R	28-5AMM	28G5042	1 EA
-L&R	28-5MA AM		1 EA
-L&R	28-5ME		1 EA
-L&R	PBY-5A		1 EA
-L&R	PBY-5B		1 EA
-L&R	PBY-5,5A	28G5042	1 EA

REQUIREMENTS PER AIRPLANE

REPLACES 28G5042-47 — CALC. WT.

REPLACED BY — ACT. WT.

LIGHT ON SHARPNESS UNLESS OTHERWISE SPECIFIED: ± K32

SCALE 6" = 1'-0"

STAMP PART NUMBER WHERE SHOWN

PART NO.	STOCK	MATERIAL	SPEC.	LH REQ. -0	RH REQ. -2	LH REQ. -3	RH REQ. -4	LH REQ. -5	RH REQ.
28G5179	.051 x 15 5/16 x 22 3/16	5250 ALM.	QQ-A-318 (A)						

PARTS LIST PER ASSY.

AC		HILL	KAREL				
NAVY NONE	Z-2P	10-24-41			11-4-41		
HEAT TREAT	FINISH	DRAFT	CHECK	STRUCT	MAT	APPROV	ENGR.

NAME SUPPORT PLATE-FUEL CELL BAY #5 - FRONT

OPP. HAND 28G5179-R

CONSOLIDATED AIRCRAFT CORP. SAN DIEGO, CALIF.

SIZE D — 28G5179

R

LET	ALTERATION	DATE	BY

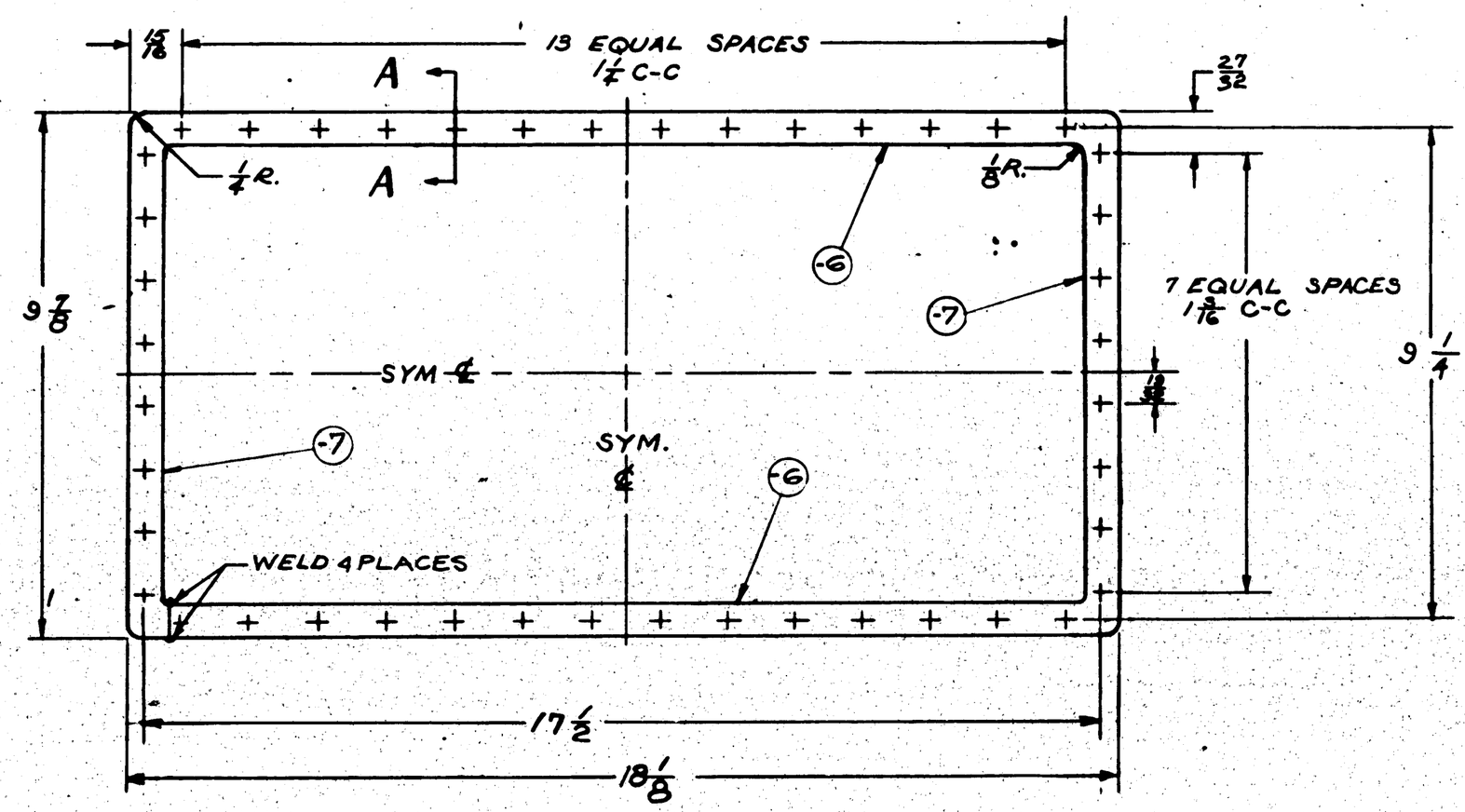

SECTION - A - A
SCALE — 12"=1'-0"

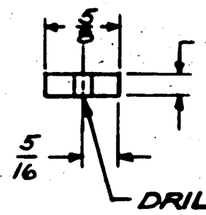

THIS PART IS FURNISHED & INSTALLED ON FUEL CELLS BY THE GOODRICH CO

FINISH CODE	
Z	ANODIC TREATMENT
P	P-27 PRIMER
AP	ALUMINIZED PRIMER
C	CADMIUM PLATE

ASSY. DASH No.	MODEL	NEXT ASSY.	QUAN.
	PBY-5A	2865085	10
	PBY-5	2865085	10

REQUIREMENTS PER AIRPLANE

REPLACES — Calc. Wt.

REPLACED BY — Act. Wt.

SCALE 6=1'-0"

STAMP PART NUMBER WHERE SHOWN

PART No.	STOCK	MATERIAL	SPEC.	LH REQ.	RH REQ.	LH REQ.	RH REQ.	LH REQ.	RH REQ.	LH REQ.	RH REQ.	LH REQ.	RH REQ.
	-7 3/16 x 9 x 19 BAR	CMR. MOLLYM	QQ-S-684	1									
	-8 3/16 x 7 x 15	C.M.S.T'L	AN-QQ-S-684		1								

PARTS LIST PER ASSY.

AC								
NAVY NORMALIZE	C-2AP	11-25-41		11-28-41				
HEAT TREAT	FINISH	DRAFT	CHECK	STRUCT		APPROV	ENG.	

NAME FRAME - TAPPING INSPECTION COVER

CONSOLIDATED AIRCRAFT CORP. SAN DIEGO, CALIF.

OPP. HAND

SIZE D

2865182

R

LET	ALTERATION	DATE	BY
A	CREATED -2 ASSY. ADDED -9 DIM. CHART & DIMS. 2 3/16, R, R.C. REMOVED DIMS. 11, 2 1/32, 1 1/64, 1 5/16 & 1 5/16. WT. CHG. NEG.	11-5-42	
B	E.O. A 62016 CHG'D DIMS. "1/64, WAS 1/32, 1/4, WAS 7/32 IN -7 NO WT. CHG.	1-4-43	
C	E.O. A 89795 IN -8, EXTENDED SLOT TO FULL LENGTH OF BOLT. ADDED NOTE, "SLOT IN --- AFTER WELDING" WT. CHG. NEG.	1-4-43	
D	E.O. A 99425 MCR P17-26 NOTE "BURR --- HEAD" WAS "SLOT --- WELDING. NO WT CHG.	6-8-43	
E	IN B/M FOR -6 & -9 "STN. STL. & "AN-QQ-S-757, COND. A" RE-PLACED BY "NOTED" ADDED MATERIAL NOTE FOR -6 & -9. NO WT. CHG.	10-9-43	

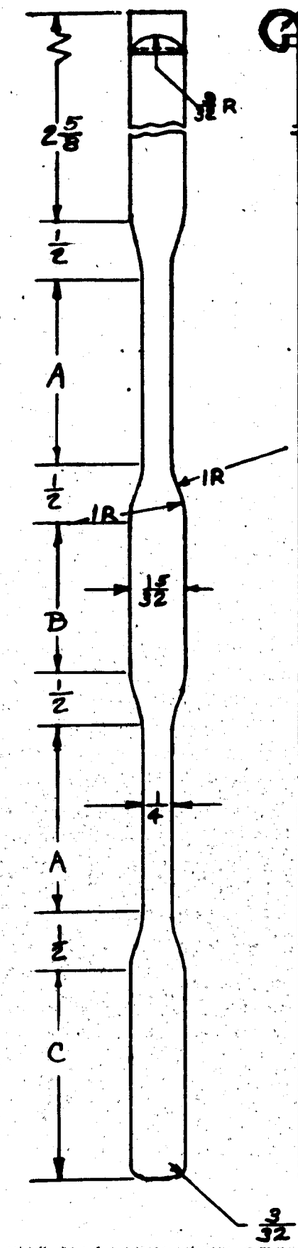

DETAIL OF -6 & -9

	A	B	C
-6	1 1/8	1 3/16	1 1/8
-9	1 1/4	1	1 1/16

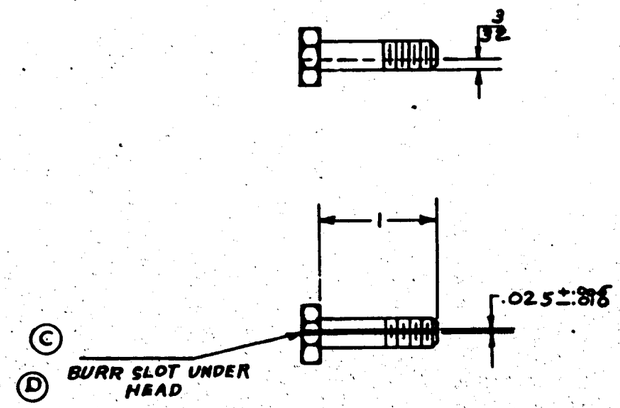

MAKE FROM AN-4-10A

DETAIL OF -8

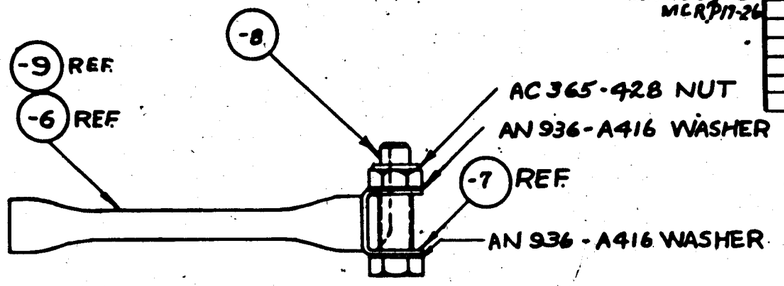

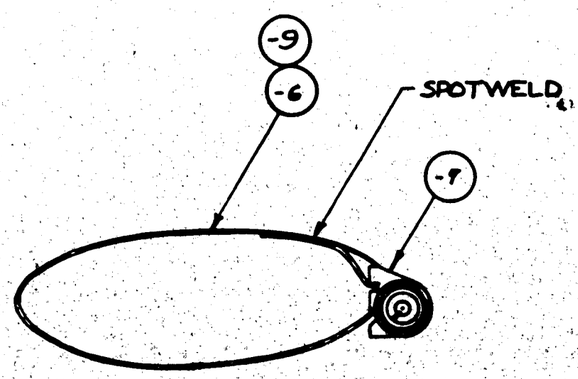

NOTE:
1.- ASSEMBLE FOR COUNTER-CLOCKWISE TIGHTENING.
(E) 2.- MATERIAL FOR -6 & -9 MAY BE:
(A) STAINLESS STEEL SHEET, SPEC. AN-QQ-S-757, COND. A, OR
(B) STAINLESS STEEL SHEET, SPEC. AN-QQ-S-772 COMP. G, COND. A.

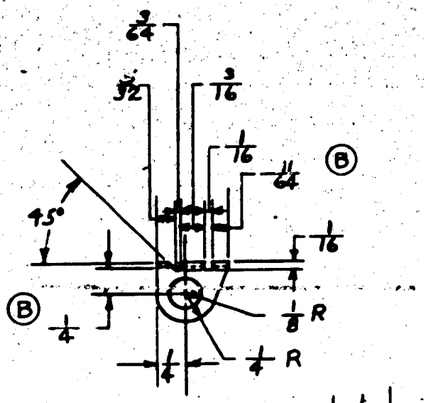

DETAIL OF -7

C-13595 P17-26
C-91876 ✱254 & ON
C-13595
C-91876 ✱254 & ON

ASSY. DASH No.	MODEL	NEXT ASSY.	QTY.
-2	PBY-5A	2865040	16
-2	PBY-5	2865040	16
-0	PBY-5A	2865040	16
-0	PBY-5	2865040	16

REQUIREMENTS PER AIRPLANE

REPLACES -2 " 32G1085 .0273 CALC. WT.
REPLACED BY -2 " 32G1109 ACT. WT.

UNLESS OTHERWISE SPECIFIED + 1/64 NOTED
SCALE 12" = 1'0"
STAMP PART NUMBER WHERE SHOWN

PART No.	STOCK	MATERIAL	SPEC.	LH REQ. -0	RH REQ. -0	LH REQ. -2	RH REQ. -2	LH REQ. -3	RH REQ. -3	LH REQ. -4	RH REQ. -4	LH REQ. -5	RH REQ. -5
-9	.016 x 9 1/8 x 5/16	NOTED	NOTED			2	2						
-8	MAKE FROM AN-4-10A					1	1						
-7	.050 x 1 1/8 x 1 3/8	C.M. STL.	AN-QQ-S-685 COMP. G			1	1						
-6	.016 x 11 x 5/16	NOTED	NOTED			1	1						

PARTS LIST PER ASSY.

AC		DRAWN	CHECK	STRUCT	MAT.	APPROV	ENG.
NAVY NONE	C (-7 & -8 ONLY)	6-1-42					
HEAT TREAT	FINISH	DRAFT					

NAME CLAMP - ELIPTICAL - SELF SEALING HOSE
CONSOLIDATED AIRCRAFT CORP. SAN DIEGO, CALIF.

OPP. HAND
DWG. SIZE D
2865190

R 0615992

LET	ALTERATION	DATE	BY
A	CHANGED NOTE #4 FROM "CAC TO FABRICATE PARTS & FURNISH TO VENDOR" TO READ "VENDOR TO FURNISH STIFFENERS WITH FUEL CELLS"	1-18-43	

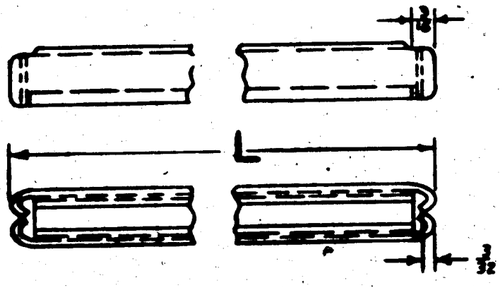

DASH NO.	L	CALC WT.
-6	17	.077
-7	18	.081
-8	19	.085
-9	20	.090
-10	21	.095
-11	23	.103
-12	24	.107
-13	12	.039

SEE NOTE 4

-8	PBY-5A	28G5109	2
-8	PBY-5	28G5109	2
-13	PBY-5A	28G5109	6
-13	PBY-5	28G5109	6
-12	PBY-5A	28G5108	8
-12	PBY-5	28G5108	8
-11	PBY-5A	28G5105	6
-11	PBY-5	28G5105	6
-10	PBY-5A	28G5109	4
-10	PBY-5	28G5109	4
-10	PBY-5A	28G5108	4
-10	PBY-5	28G5108	4
-10	PBY-5A	28G5107	2
-10	PBY-5	28G5107	2
-10	PBY-5A	28G5106	4
-10	PBY-5	28G5106	4
-10	PBY-5A	28G5105	2
-10	PBY-5	28G5105	2
-9	PBY-5A	28G5109	2
-9	PBY-5	28G5109	2
-9	PBY-5A	28G5108	4
-9	PBY-5	28G5108	4
-9	PBY-5A	28G5107	4
-9	PBY-5	28G5107	4
-9	PBY-5A	28G5106	2
-9	PBY-5	28G5106	2
-9	PBY-5A	28G5105	6
-9	PBY-5	28G5105	6
-8	PBY-5A	28G5107	2
-8	PBY-5	28G5107	2
-8	PBY-5A	28G5106	2
-8	PBY-5	28G5106	2
-7	PBY-5A	28G5107	8
-7	PBY-5	28G5107	8
-6	PBY-5A	28G5106	8
-6	PBY-5	28G5106	8

ASSY. DASH No.	MODEL	NEXT ASSY.	QTY.

REQUIREMENTS PER AIRPLANE

REPLACES	NOTED Gross Wt.
REPLACED BY	Adv. Wt.
Limit on Dimensions Unless Otherwise Specified ±1/32	SCALE 1/2"=1'-0"
STAMP PART NUMBER WHERE SHOWN	

NOTES:-

1. BREAK ALL SHARP EDGES.
2. CONT.#91876 FOR PBY-5. } MCR 181
3. CONT.#NXS13595 FOR PBY-5A }
4. VENDOR TO FURNISH STIFFENERS WITH FUEL CELLS.
(A)

APPROVED FOR TOOLING BY
P.B. Hamburger 1-14-43

PART No.	STOCK	MATERIAL	SPEC.	LH REQ.	RH REQ.	LH REQ.	RH REQ.	LH REQ.	RH REQ.	LH REQ.	RH REQ.	LH REQ.	RH REQ.
PARTS LIST PER ASSY.				-0		-2		-3		-4		-5	

SYMMAX NOTED

AC								
NAVY SR53	Z-P-GP	DRAFT	CHECK	STRUCT	MAT	APPROV	ENG	
HEAT TREAT	FINISH			11		1-15-43		

NAME STIFFENER-SELF-SEALING FUEL CELL — OPP. HAND

CONSOLIDATED AIRCRAFT CORP. San Diego, Calif. — SIZE D — DWG. 28G5191

R

LET	ALTERATION	DATE	BY
A	ADDED NOTE "A" FOR USE ONLY WITH SELF SEALING FUEL LINES NO WT CHG.	[illegible]	[illegible]
B	LIMITED REQ'S. FOR PBY-5 & 5A TO MCR 1190-A NO WT CHG.	7-8-43	[illegible]

FUEL SYSTEM DIAGRAM

FOR SELF SEALING FUEL LINES ON MODELS PBY-5,5A&5B

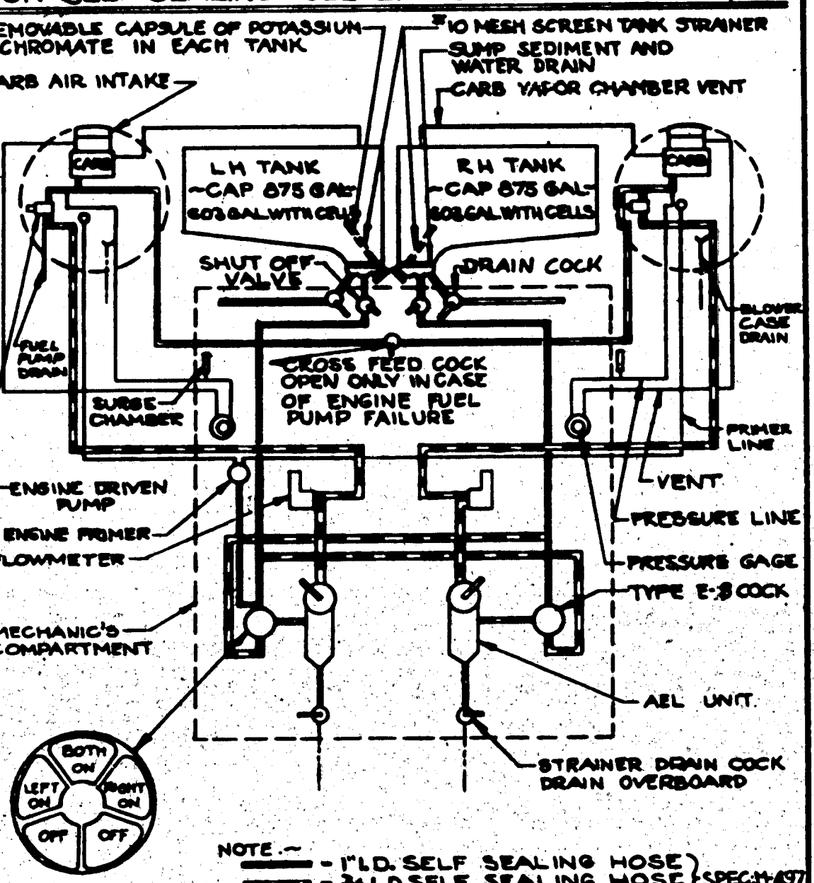

NOTE:—

- 1" I.D. SELF SEALING HOSE
- 3/4 I.D. SELF SEALING HOSE } SPEC: 11-497
- 3/8 I.D. SELF SEALING HOSE
- 1" O.D. AL. ALLOY TUBING
- 3/8 O.D. AL. ALLOY TUBING } 5280 SPEC: 44T32 TEMP "A"
- 1/4 O.D. AL. ALLOY TUBING

CONSOLIDATED AIRCRAFT CORP. SAN DIEGO, CALIF. DWG. Nº 2866012

TRIM BLUE PRINT COPIES ON THIS LINE

SEE NOTE UP TO MCR 1804

ASSY. SASH No.	MODEL	NEXT ASSY.	QUAN.
	PBY-5B	2866081	1
	PBY-5A	2866081	1
	PBY-5	2866081	1

REQUIREMENTS PER AIRPLANE

REPLACES — CALC. WT.

REPLACED BY — ADV. WT.

SCALE

STAMP PART NUMBER WHERE SHOWN

BLUE PRINT

PART No.	STOCK	MATERIAL	SPEC.	LH REQ.	RH REQ.	LH REQ.	RH REQ.	LH REQ.	RH REQ.	LH REQ.	RH REQ.	LH REQ.	RH REQ.
PARTS LIST PER ASSY.				-0		-2		-3		-4		-5	

A/C — NAVY — HEAT TREAT — FINISH — KARFL — 12-26-40 — DRAFT

CHECK — STRUCT — MAT — APPROV — ENG

NAME DIAGRAM FUEL SYSTEM

CONSOLIDATED AIRCRAFT CORP. San Diego, Calif.

OPP. HAND

SIZE D — DWG. 2866012

Ⓐ FOR USE ONLY WITH SELF-SEALING FUEL LINES

R. 2109082

[redacted]

OPPOSITE HAND							
DRAWING APPLIES ON:				DETAIL PARTS PER ASSEMBLY:			
AIRPLANE MODEL	ASSEMBLY NUMBER	NO. PER ASS'Y	NO. PER AIRPLANE	STANDARD PARTS	NO. REQ'D	PART NUMBER	NO. REQ'D

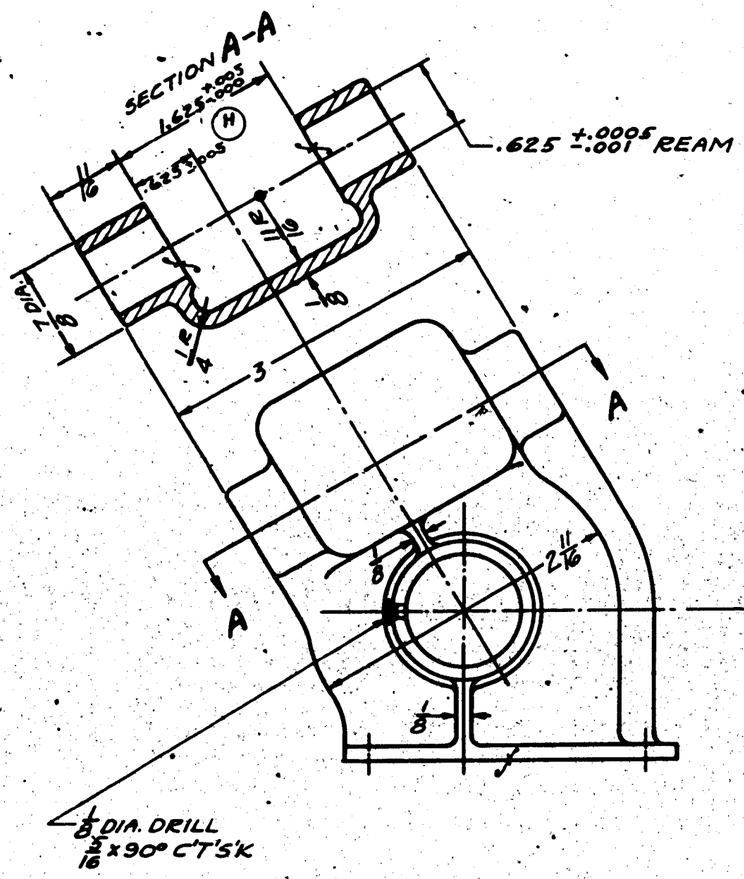

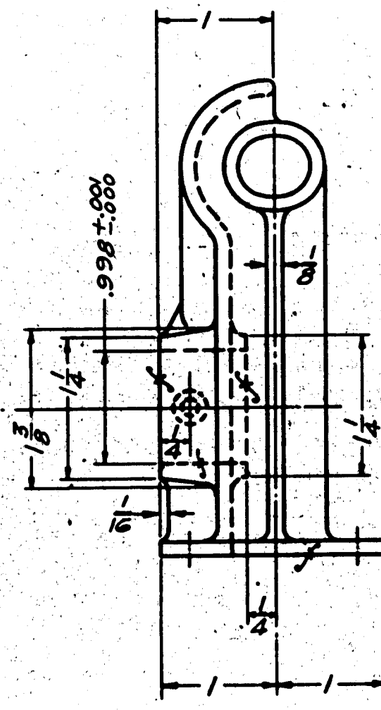

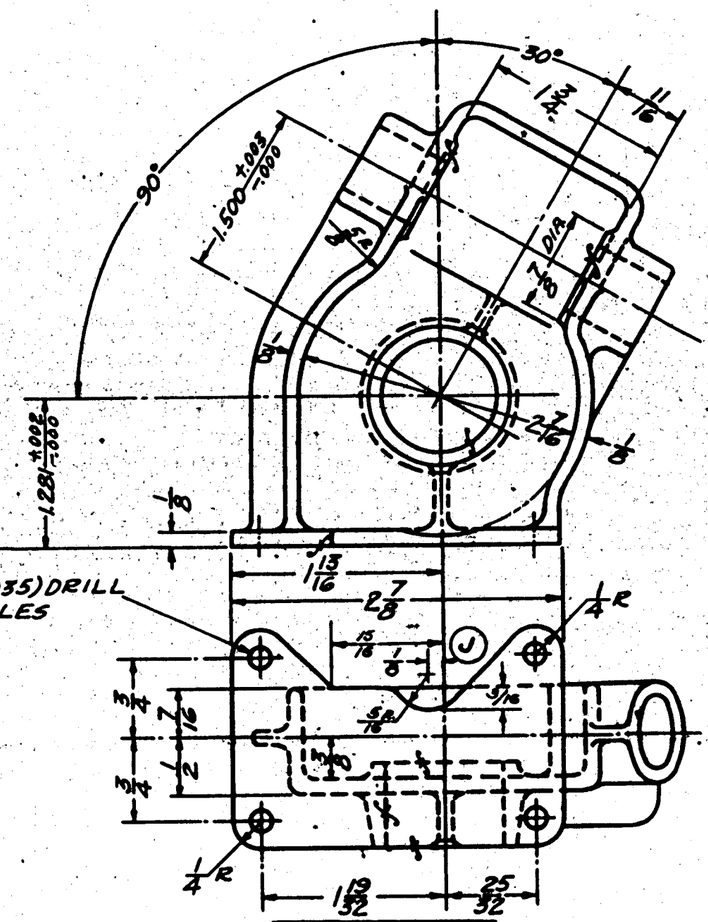

NOTES:
1.- ALL RADII 1/8 UNLESS OTHERWISE DESIGNATED.
(K) 2.- MATERIAL MAY BE:-
(A)- ALUM. ALLOY CASTING, SPEC. AN-QQ-A-390 CL I, H.T. 29,000 P.S.I., OR
(B)- 5-195T6, SPEC. AN-A-5 CL. II, 32,000 P.S.I.

FINISH:-
Z-P-2 G.A. ON P2Y-3, XP3Y-1, & PBY-1, P2Y-2
Z-P-2 G.P. ON PBY-5 & FUTURE

[illegible] 28B1808 REQ			
FOR PBY-5A LIMITED "I TO M.C.R. 272A-1 ADD 5 REQ'D (1 ADD)			
FOR PBY-5A, ACCEPTED ON A/N. CHG	9-2-40	[illegible]	
[illegible], REPLACED "ALUM ALLOY CASTING, SPEC 66A1E, H.T. 84000 P.S.I." WITH "MATERIAL" TO FACE OF			
ADDED MATL. NOTE "2.			
ADDED PARTS TO DATE [illegible] CUTOUT), REMOVED [illegible]	9-5-43	MBELL	
3 ADDED	10-22-36	E.J.C.	
REQ. ADDED	4-17-36	L.O.C.	
ED UP TO DATE	4-17-36	L.O.C.	
NGED.	7-14-35	HAFER	
	DATE	CH. BY	

CA-10	28B1808		1								
PBY-5A	28B1811		1	PBY-3	28B1808						
PBY-5A	28B1808		1	PBY-2	28B1808						
[illegible]	28B1808		1	PBY-1	28B1808						
[illegible]	28B1808		1	XPBY-1	28B1808	1	1				
[illegible]	[illegible]			PBY-2	22H335	1	1				
				P2Y-3	22H335	1	1				
28W	28B1808		1								
28W	28B1808		1								
28W	28B1808		1								
[illegible]	[illegible]		1								
[illegible]	[illegible]		NOTE								

MCE "272A-1 ADD 1 TO M.C.R. 272A-1

NAVY APPROVED 5-6-36 DATE

CALC. WT.	ACT. WT.
.53	.53

SCALE 1/1

AIRPLANE MODEL	ASSEMBLY NUMBER	NO. PER ASS'Y	NO. PER AIRPLANE	STANDARD PARTS	NO. REQ'D	PART NUMBER	NO. REQ'D
DRAWING APPLIES ON:				DETAIL PARTS PER ASSEMBLY:			

MATERIAL	NOTED	DRAFTSMAN	CAG 10-27-31
SPEC'S. [illegible] NO.:	NOTED	STRENGTH & WT. EXAM.	MILLER 11-12-31
HEAT TREAT	NOTED	CHECKED	
FINISH	NOTED	APPR'VD. & REL'S'D.	

HOUSING-HULL-BOMBERS WINDOW-SLIDING COVER GEAR

CONSOLIDATED AIRCRAFT CORPN. DR'W'G. No. 22H284

GREEN PRIME
[redacted]

[redacted]

OPPOSITE HAND							
DRAWING APPLIES ON:				DETAIL PARTS PER ASSEMBLY:			
AIRPLANE MODEL	ASSEMBLY NUMBER	NO. PER ASS'Y	NO. PER AIRPLANE	STANDARD PARTS	NO. REQ'D	PART NUMBER	NO. REQ'D
PBY-1	22H1528		1				
PBY-5			1				

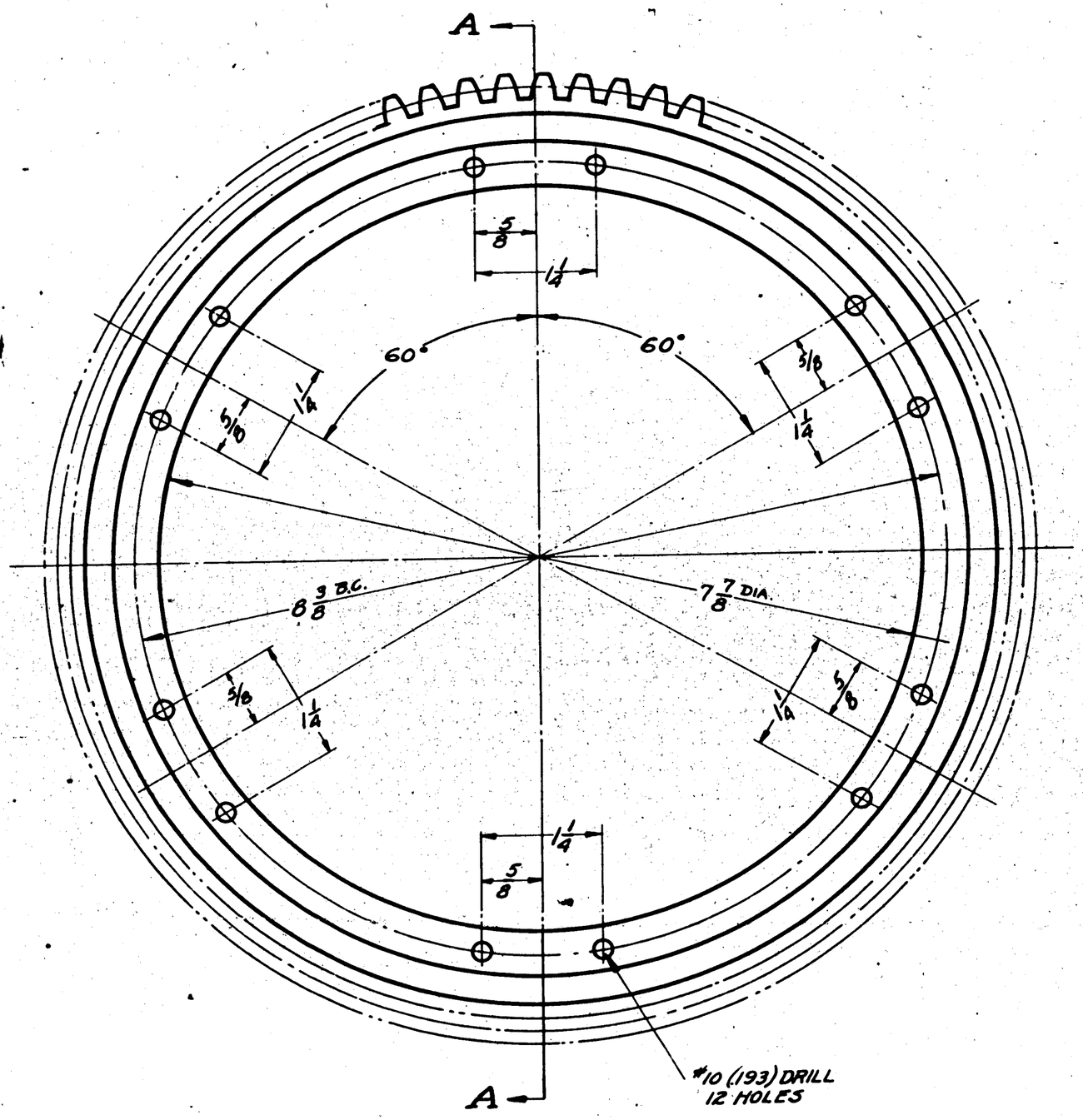

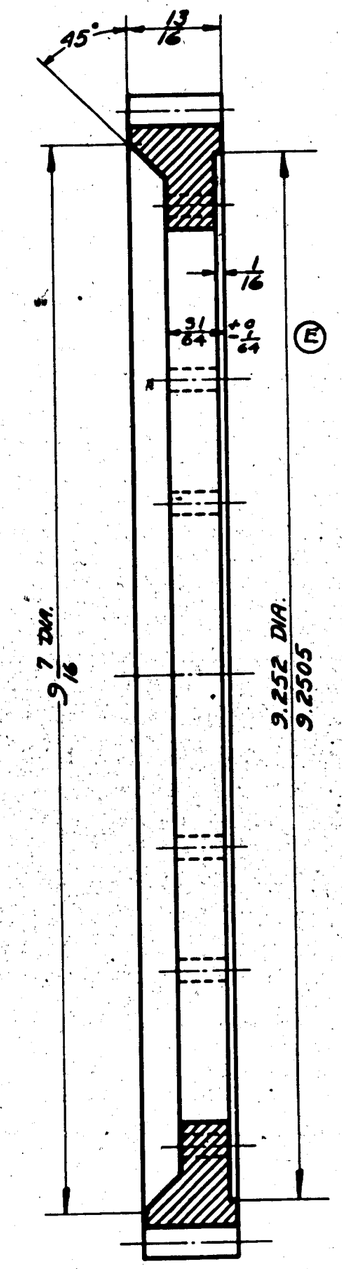

SECTION A-A

NOTE:
LOAD AT PITCH LINE 1280#

28-5 [redacted]	28H1026	1	1				
PBY-[redacted]	28H1026	1	1				
PBY-5A	28H1026	1	1				
PBY-5B	28H1026	1	1				
28-5 [redacted]	28H1026	1	1				
[redacted] AC	28H1026	1	1				
PBY-4	28H1027						
PBY-3	28H1027						
PBY-2	28H1027						
PBY-1	28H1027						
XPBY-1	28H1027						
PBY-2	22H1524	1	1				
PBY-3	22H1528	1	1				

GEAR DATA

DIA. PITCH	6-8
PITCH DIA.	10
TEETH (STUB)	60
OUTSIDE DIA.	10.250
PRESS. ANGLE	20°

NAVY APPROVED RCW 11-7-35 DATE

CALC. WT. .84#	ACT. WT. .84#	AIRPLANE MODEL	ASSEMBLY NUMBER	NO. PER ASS'Y	NO. PER AIRPLANE	STANDARD PARTS	NO. REQ'D	PART NUMBER	NO. REQ'D
SCALE 1/1		DRAWING APPLIES ON:				DETAIL PARTS PER ASSEMBLY:			

MATERIAL BAKELITE-CANVAS OR EQUIV.		DRAFTSMAN	VOGELI 10-13-31
SPEC'S. NAV NO 17114		STRENGTH & W'T. EXAM.	[redacted] 12-1-31
HEAT TREAT NONE		CHECKED	WILKINSON 11-18-31
FINISH "		APPR'VD. & REL'S'D.	

GEAR - ANCHOR REEL

CONSOLIDATED AIRCRAFT CORPN. DR'W'G. No. 22H528

LET.	CHANGED	DATE	CH. BY
E	SEC. A-A, 21/64 +0 -1/64 WAS 1/2. WT. CHG. NEG	6-26-43	WELLS
D	PBY-1 ADDED	10-31-35	CAMP
C	TRACED UP TO DATE	4-1-35	TUTTLE

SULLIVAN-SUGDEN Co., Inc. BUFFALO RAVELLO PENCIL CLOTH

RE

SUPPLIES & EQUIPMENT CLASSIFICATION			
LET	ALTERATION	DATE	BY
H	TRACED	7-26-37	[illegible]
J	CHANGED -3 TO 22H774-3	6-14-38	[illegible]
K	ADDED HOLES AND DRILL NOTES	7-1-39	[illegible]

(K) JIG DRILL THRU $\frac{3}{8}$ DIA. -3 HOLES TO MATCH CASTING 28H2039.

(K) JIG DRILL THRU $\frac{3}{8}$ DIA. -2 HOLES TO MATCH CASTING 28H1050

$1\frac{1}{2}$

24 R. APPROX.

$15\frac{3}{16}$

$1\frac{7}{8}$

$2\frac{7}{16}$ REF

℄ AXLE MACH. LENGTH

$53 \pm \frac{1}{16}$

$37\frac{7}{8}$

$5\frac{1}{8}$ MACHINED LENGTH

$8\frac{1}{2}$

$5.437^{+.004}_{-.000}$

A

$3.562^{+.005}_{-.000}$ BORE IN TUBE, $\frac{5}{8}$ DEEP
$3.562^{+.000}_{-.003}$ ON PLUG

$2.561^{+.000}_{-.002}$ DIA

$3.980^{+.000}_{-.004}$ DIA

$1\frac{5}{8}$

$3.981^{+.000}_{-.003}$ DIA

$2\frac{1}{2}$

DIA. TO BE CONCENTRIC WITH O.D. OF TUBE

2 DIA.

$\frac{7}{8}$ $1\frac{3}{4}$ $1\frac{7}{16}$

$12\frac{1}{32}$ $1\frac{3}{4}$

$23\frac{3}{4}$ 2

JIG DRILL THRU $\frac{1}{2}$ DIAM. -2 HOLES TO MATCH CASTING 28H2013 (K)

A

$\frac{1}{4}$ $\frac{7}{8}$ $\frac{1}{2}$

THD $2\frac{1}{2}$-8 NF-3
P.D. $2.4188^{+.0000}_{-.0054}$
AFTER PLATING

$2\frac{1}{2}$

CHAMFER $\frac{1}{16}$ x 45°

45° 45° 45°

DRILL THRU $\frac{41}{64}$ (.640 ±.005)
4 HOLES

22H774-3
(J)

(-2) 4 O.D. X 25 X $53\frac{1}{2}$
CHRO. MOLY. TUBING
NAVY SPEC. 44T18

SECTION A-A

FINISH CODE	
Z	ANODIC TREATMENT
P	P-27 PRIMER
AP	ALUMINIZED PRIMER
C	CADMIUM PLATE

BL - BLACK LACQUER

O.H.	MODEL	NEXT ASSY.	REQ.	ST'D PARTS	LH REQ.	RH REQ.	PART NO.	LH REQ.	RH REQ.
	PBY-5B	28H3005	2						
	PBY-4	28H3005-1							
	PBY-4	28H3005							
	PBY-3	28H3005-1							
	PBY-3	28H3005							
	PBY-2	28H005-1							
	PBY-2	28H005							
	PBY-1	28H005-1					22H774-3	1	
	PBY-1	28H005					28H040-2		1

REQUIREMENTS PER AIRPLANE | MAT. | PARTS LIST PER ASSY.

REPLACES

REPLACED BY

LIMIT ON DIMENSIONS UNLESS OTHERWISE SPECIFIED + −

APPROVED 7-26-37 DATE

CALC. WT. 46 ACT. WT.

SCALE 6" = 1'-0"

AC 160,000 #/a

NAVY NOTED MATERIAL

NOTED SPEC.

N.A.F. SH-27 HEAT TREAT

C-2P-1BL FINISH

CONSOLIDATED AIRCRAFT CORP. BUFFALO, N. Y.

STAMP PT. No. WHERE SHOWN

NAME STRUT BEACHING GEAR

OPP. HAND

DWG. SIZE D 28H040

	DRAFT	CHECK	EXAM.	ENG.
CORTE	3-30-36	7-29-37	8-11-36	

Sullivan-Merriman Co., Inc. Buffalo
Imperial Tracing Cloth

SUPPLIES & EQUIPMENT CLASSIFICATION			
LET	ALTERATION	DATE	BY
L	TRACED	4-20-37	E.M.
F	WAS 3 1/2 DEEP	1-26-38	BOWEN
Q	1.468 +.028 -.010 WAS 1.500 +.000 -.010 7/32, WAS 1/4 7/32 +1/64 -0 WAS 1/8 +1/64 -0	5-1-41	HICKS
H	REMOVED 1 3/8 DRILL X 2 3/4 DEEP DIM'S. ON 1 1/4 CORED HOLE. WT. INCREASE +.20	6-24-42	FASTERLY
J	IN B/M, REPLACED "493T. CLF 85,000 1/64 IN." WITH "NOTED" TO FACE, ADDED NOTE 1. NO WT. CNG.	9-8-43	HODIAK

E.O.A5237
28-5 M'S
PBY-5
E.O.A26002

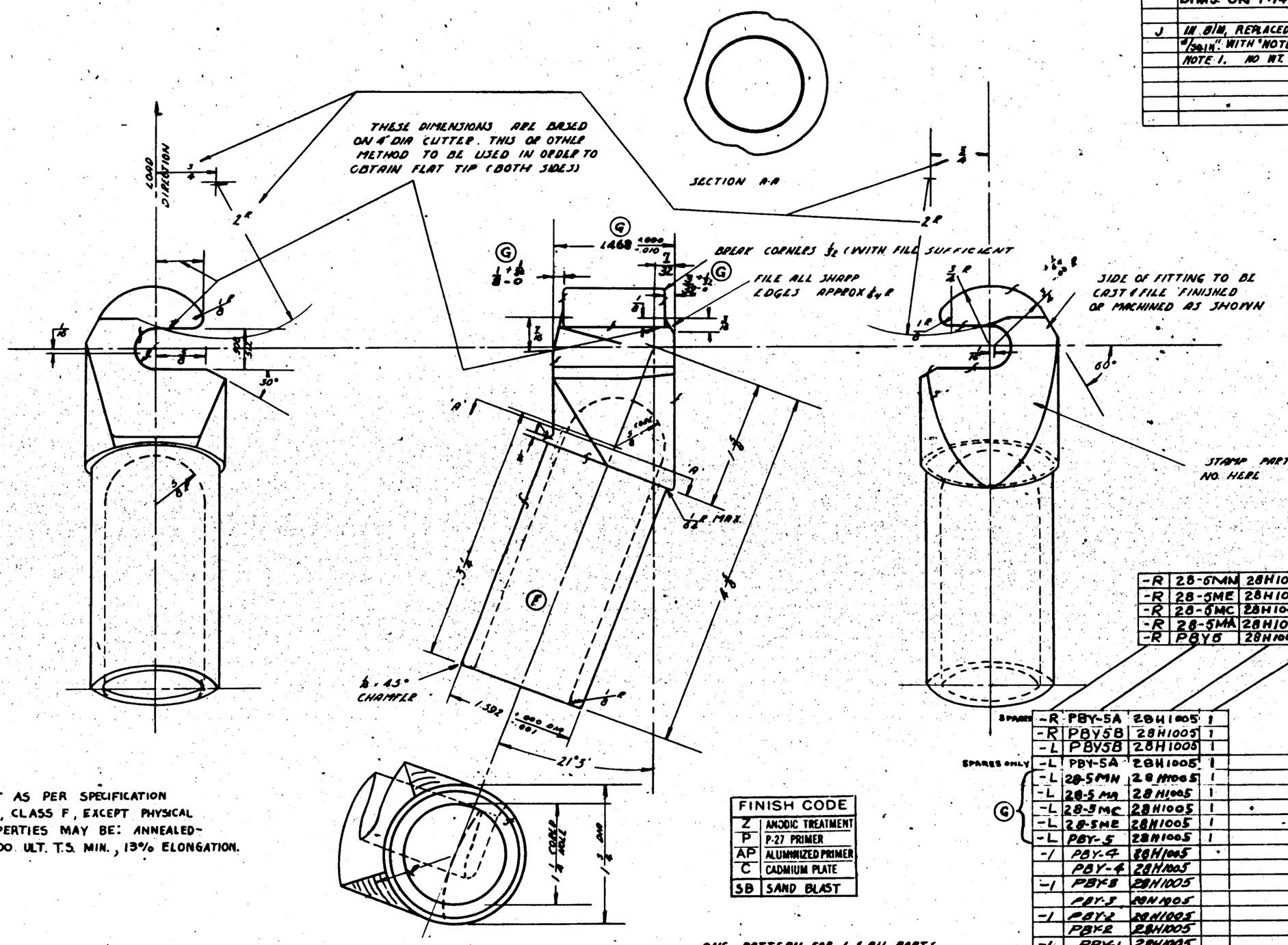
THESE DIMENSIONS ARE BASED ON 4" DIA CUTTER. THIS OR OTHER METHOD TO BE USED IN ORDER TO OBTAIN FLAT TIP (BOTH SIDES)
LOAD DIRECTION
SECTION A-A
BREAK CORNERS 1/2 (WITH FILE SUFFICIENT
FILE ALL SHARP EDGES APPROX 1/64 R
SIDE OF FITTING TO BE CAST & FILE FINISHED OR MACHINED AS SHOWN
STAMP PART NO. HERE
1/32 R MAX.
45° CHAMFER
1.392
21°3'
50°
60°

NOTES:-

1.- CAST AS PER SPECIFICATION 4951, CLASS F, EXCEPT PHYSICAL PROPERTIES MAY BE: ANNEALED- 90,000 ULT. T.S. MIN., 13% ELONGATION.

FINISH CODE	
Z	ANODIC TREATMENT
P	P-27 PRIMER
AP	ALUMINIZED PRIMER
C	CADMIUM PLATE
SB	SAND BLAST

ONE PATTERN FOR L & R.H. PARTS

													LH REQ.	RH REQ.	PART NO.	LH REQ.	RH REQ.
	-R	28-5MN	28H1005	1													
	-R	28-5ME	28H1005	1													
	-R	28-5MC	28H1005	1													
	-R	28-5MA	28H1005	1													
	-R	PBY5	28H1005	1													
SPARE	-R	PBY-5A	28H1005	1													
	-R	PBY5B	28H1005	1													
	-L	PBY5B	28H1005	1													
SPARES ONLY	-L	PBY-5A	28H1005	1													
(G)	-L	28-5MN	28H1005	1													
	-L	28-5MA	28H1005	1													
	-L	28-5MC	28H1005	1													
	-L	28-5ME	28H1005	1													
	-L	PBY-5	28H1005	1													
	-1	PBY-4	28H1005														
		PBY-4	28H1005														
	-1	PBY-3	28H1005														
		PBY-3	28H1005														
	-1	PBY-2	28H1005														
		PBY-2	28H1005														
	-1	PBY-1	28H1005														
		PBY-1	28H1005														
		YPBY-1	28H1005														

D.M.	MODEL	NEXT ASSY.	REQ.	ST'D PARTS	MAT.	PARTS LIST PER ASSY.	
REQUIREMENTS PER AIRPLANE							
NOTED	NOTED			SB SAND CAST'G C-P			
SPEC.	HEAT TREAT			FINISH		DRAFT	CHECK	EXAM.	ENG.

REPLACES	APPROVED	4-20-37 DATE	1-22-38 MILLER
REPLACED BY	CALC.WT.	ACT.WT.	1-MH 5-15-41
LIMIT ON DIMENSIONS UNLESS OTHERWISE SPECIFIED ± .010	SCALE 12"=10"		
[redacted]	AC		
	NAVY STEEL CAST'G		
	MATERIAL		
CONSOLIDATED AIRCRAFT CORP. BUFFALO, N.Y.	NAME	HOOK — BLEACHING GEAR — TAIL WHEEL	
STAMP PT. No. WHERE SHOWN	SIZE D	28H1008	OPP. HAND 28H1008-1

SULLIVAN-GRIFFITH CO., INC. BUFFALO
IMPERIAL TRACING CLOTH

SUPPLIES & EQUIPMENT CLASSIFICATION			
LET	ALTERATION	DATE	BY
E	TRACED	1-20-38	H.W.
F	WAS 3" DIM.	1-19-38	Bowen
G	FINISH WAS C-P-2 AKV	1-19-38	Bowen
H	ADDED NOTE: "ALTERNATE---"		
	COND. N." WT. CHG. NEG.	10-10-42	BRADLEY

-4 .094 CHR. MOLY. STL. SHEET SPEC. 47514

-2 .094 CHR. MOLY. STL. SHEET SPEC. 47514

-3 1¼ O.D. x .058 CHR. MOLY. STL. TUBE SPEC. 44T18

AN535-00-3

APPROX. ¼, ⅜, ½

1/16 R.

2¼ APPROX. (F)

37 3⅛

20 APPROX.

8½ APPROX.

8

¾

DRILL ⅛ THRU -3 ONLY, 4 HOLES EACH END OF -8 } WELD ALL AROUND HOLES TO INNER TUBE -8.

9/16 R.

½

1/32 CHAMFER

½ +⅛ -0

½ +⅛ -0

⅞

EXTENSION OF TUBE, -3. APPROX.

DRILL ⅛

3/16 R.

1/16

8

-8 1⅛ O.D. x .065 CHR. MOLY. STL. TUBE SPEC. 44T18

-5 .094 CHR. MOLY. STL. SHEET SPEC. 47514

.546 (9/16) DRILL
REAM .560 +.002 -.000
Q6B-14-8 BUSHING
PRESS IN PLACE AFTER H.T.

PRICK-PUNCH BOTH SIDES OF ALL 4 BUSHINGS, APPROX AS SHOWN.

11½

6

SCREW HERE, CAN GO DO NOT PUSH HERE

STENCIL IN WHITE 2 PLACES (ONE ON EACH SIDE)

SCALE: 3"=1'-0"

NOTE:- PLACE SCREW HDS. OPPOSITE LUG AND PEEN ENDS.

⅛, ¼, ½, ½, ¼, 1½

-8 REF.

-3 REF.

-7

.030 TO .040 x 5½ x 1¼ LAM. PHENOLIC MAT. SPEC.-17P5 TYPE FBG

AN520-6-26

ASSEMBLY NOTE: DRILL #33 (.113) THRU -3, -8 -6, +-7 AS A UNIT. THEN TAP 6-40 U.S.F. THDS. IN -6 ONLY, (3 PLACES) THEN REDRILL #28 (.140) THRU -3, -7, +-8 ONLY.

-6 CHR. MOLY. STL. SHEET SPEC. 47514

(H) * NOTE—
ALTERNATE MATERIALS FOR -8:
CHROME-MOLY WELDED TUBING, AN-T-3, TYPE I, COND. N.
CHROME-MOLY SEAMLESS TUBING, AN-WW-T-850, COND. N.

FINISH CODE	
Z	ANODIC TREATMENT
P	P-27 PRIMER
AP	ALUMINIZED PRIMER
C	CADMIUM PLATE

BL- BLACK LACQUER

O.H.	MODEL	NEXT ASSY.	REQ	PARTS								
	28-5MN	28H1010	1									
	28-5ME	28H1010	1	Q6B-14-8	4	4	4	4				
	28-5MC	28H1010	1	AN520-6-26	3	3	3	3				
	28-5MA	28H1010	1	AN535-00-3	2	2	2	2				
	PBY-5B	28H1010	1	* -8	1	1	1	1				
	PBY-5	28H1010	1	-7	1	1	1	1				
	PBY-4	28H1010		-6	1	1	1	1				
	PBY-3	28H1010		-5	2	2	2	2				
	PBY-2	28H1010		-4	4	4	4	4				
	PBY-1	28H1010		-3	1	1	1	1				
	XPBY-1	28H1010		28H1009-2	2	2	2	2				
					PBY-1	PBY-2	PBY-3	PBY-4	PBY-5	PBY-5A	PBY-5B	PBY-5MA

REQUIREMENTS PER AIRPLANE | PARTS LIST PER ASSY.

REPLACES 28H1009 ref 1-20-38	APPROVED H.W. 4-20-38 DATE
REPLACED BY	
LIMIT ON DIMENSIONS UNLESS OTHERWISE SPECIFIED ± .010	CALC. WT. / ACT. WT.
	SCALE 12"=1'-0" & 3"=1'-0"
	AC
	NAVY NOTED
	MATERIAL

NOTED	STRESS ASSY. -6, -7, -8 WELDING	ANOD. INSIDE & C.P. OUTSIDE	SHOP	DRAWN	MILLER
SPEC.	HEAT TREAT	STENCIL LETTERS AS NOTED	5-9-36	5-13-37	
		FINISH	DRAFT	CHECK	EXAM. ENG.

CONSOLIDATED AIRCRAFT CORP. BUFFALO, N.Y.

STAMP PT. No. WHERE SHOWN

NAME: STRUT-BEACHING GEAR TAILWHEEL-CENTER

OPP. HAND

DWG. D SIZE 28H1009

SULLIVAN-MORGEDAL CO., INC. BUFFALO
INFORMAL TRACING CLOTH

SUPPLIES & EQUIPMENT CLASSIFICATION			
LET	ALTERATION	DATE	BY
D	TRACED	4-20-37	H.W.
E	ADDED NOTE	6-2-37	NELSON
F	ADDED MAT'L NOTES # 1 & # 2		
	NOTE: "SEE MAT'L NOTE" WAS		
	"-2 MAT'L.---Z-P-2BC."		
	WT. CHG. NEG.	12-30-42	

E.O. # A91186 →

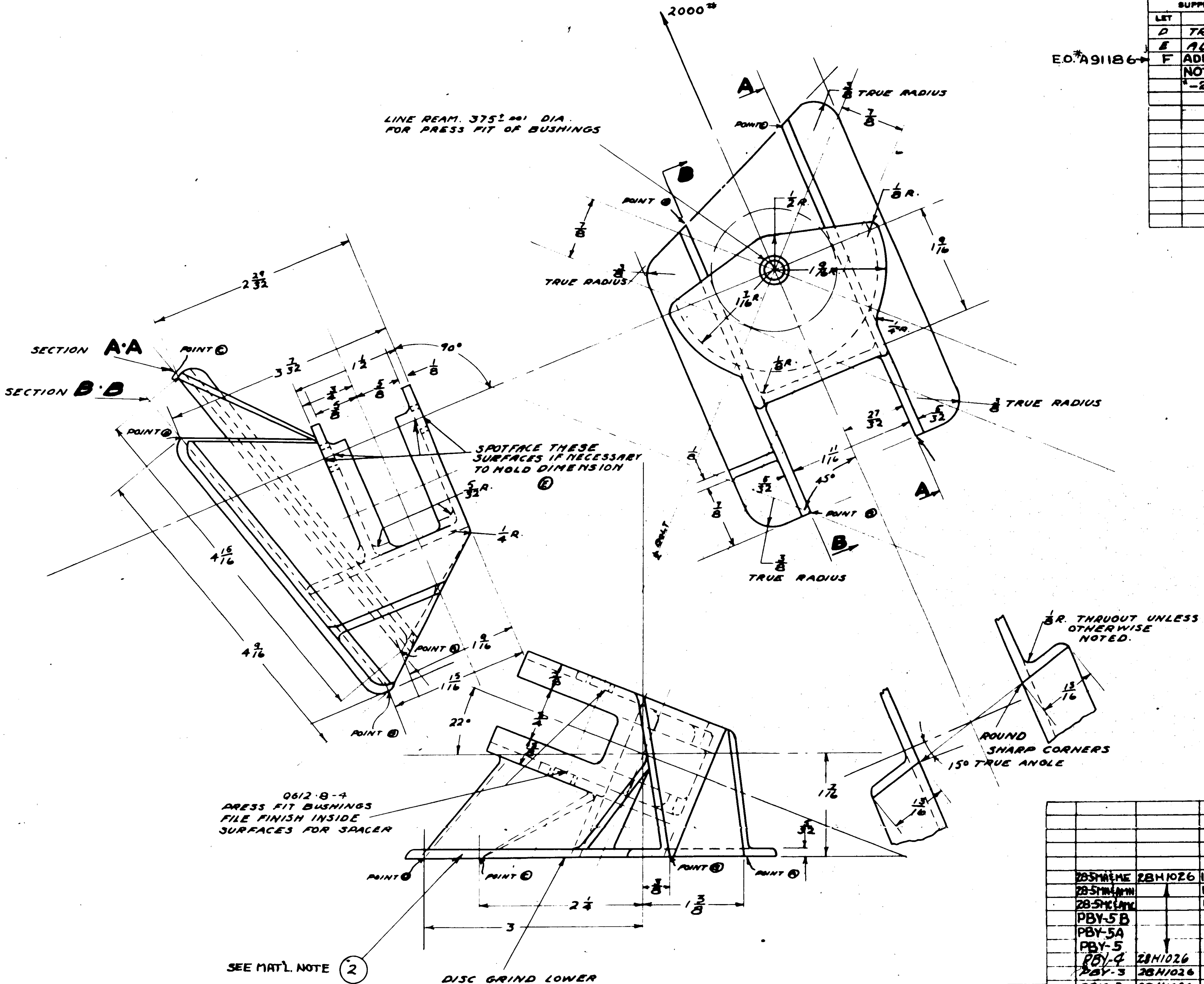

(F)

MATERIAL NOTE:

1. -2 MAY BE MADE FROM AL. AL. CASTING 356T6 SPEC. AN-QQ-A-394, H.T. 29,000 #/□," FINISH Z-P-2BC.

2. OR AL. AL. CASTING 195T4 SPEC. AN-QQ-A-390, CL. I. H.T. 29,000 #/□." FINISH Z-P-2BC

MASTIC COMPOUND

FINISH CODE	
P	PR PRIMER
AP	
C	

O.H.	MODEL	NEXT ASSY.	REQ.	PARTS			
				G-612-8-4	2	2	2
	28-5MA & ME	28H1026	1 EA.				
	28-5MA & AMN	↕	1 EA.				
	28-5MC & AMC		1 EA.				
	PBY-5B		1				
	PBY-5A		1				
	PBY-5		1				
	PBY-4	28H1026					
	PBY-3	28H1026					
	PBY-2	28H1026					
	PBY-1	28H1026		28H1018-2	1	1	1
					PBY-1	PBY-2	PBY-3

REQUIREMENTS PER AIRPLANE | MAT. | PARTS LIST PER ASSY.

REPLACES 28H1018 OF 4-3-36	APPROVED 4-20-37 DATE	
REPLACED BY	44 CALC. WT.	ACT. WT.
LIMIT ON DIMENSIONS UNLESS OTHERWISE SPECIFIED ± 1/32	SCALE 12" = 1'-0".	

[redacted]

AC							
NAVY NOTED	NOTED	NOTED	NOTED	FANNE		GREEN	
				5-4-36	5-13-37	5-18-36	
MATERIAL	SPEC.	HEAT TREAT	FINISH	DRAFT	CHECK	EXAM.	ENG.

CONSOLIDATED AIRCRAFT CORP. BUFFALO, N. Y.

STAMP PT. No. WHERE SHOWN

NAME: BRACKET-ASSEMBLY ANCHOR BOX. INTERIOR-PULLEY-INNER

OPP. HAND

DWG. SIZE D 28H1018

SULLIVAN McKEEGAN Co. INC. BUFFALO
IMPERIAL TRACING CLOTH

LET	ALTERATION	DATE	BY
	SUPPLIES & EQUIPMENT CLASSIFICATION		
A	TRACED	4-20-37	H.W.
B	MAT'L SPEC WAS 17PS GR FBG	1-25-38	RRH.
C	REMOVED RAD. IN CORNERS	3-8-38	WEIR
"	9/16 & 9/16 DIM. ADDED	" "	"
D	REVISED DIM. PROCEDURE & ADDED	3-16-42	[illegible]
"	TOLERANCE PER D.E.M. TO CONFORM	"	"
"	WITH PARTS ON HAND	"	"

C.O. 6985A

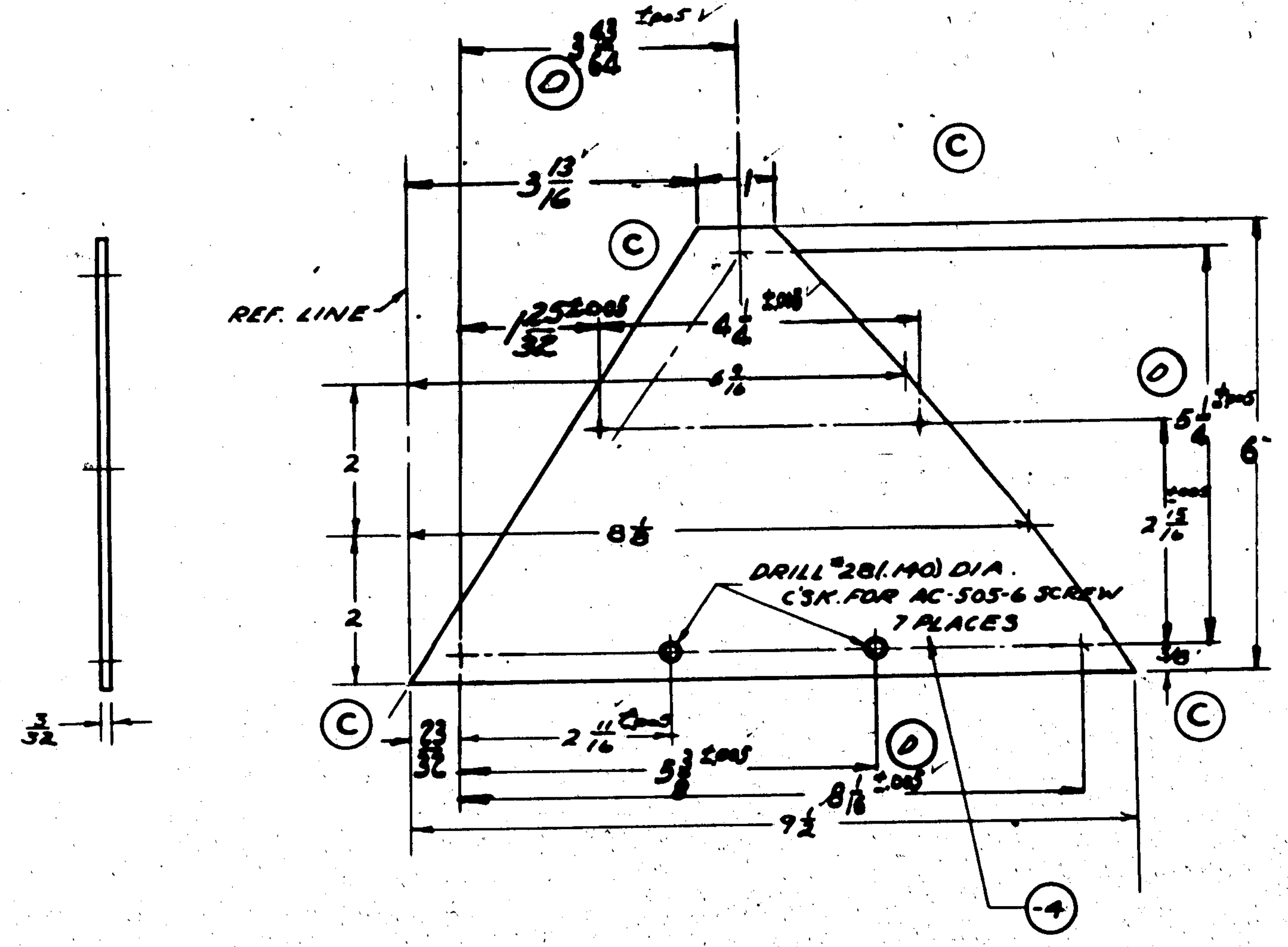

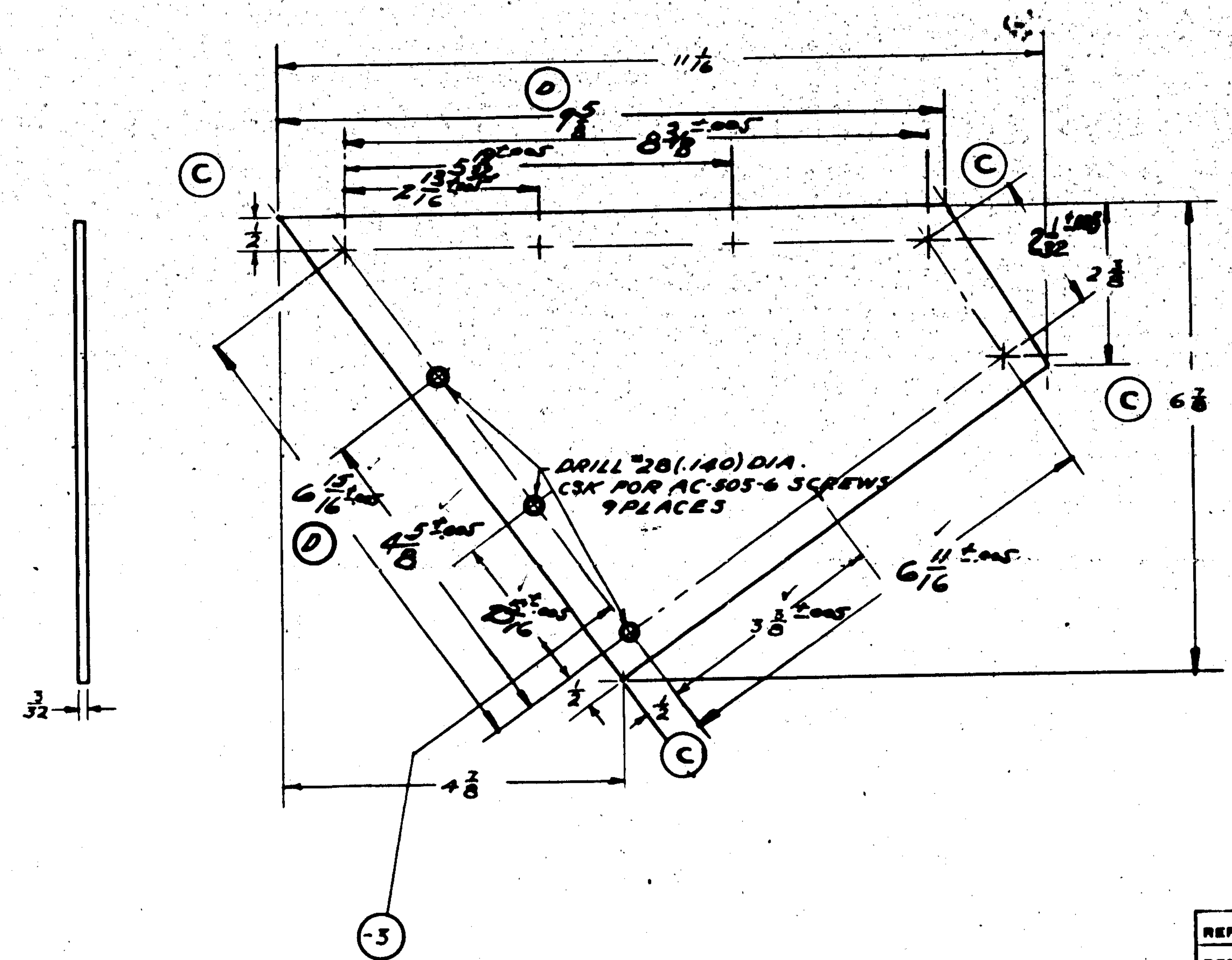

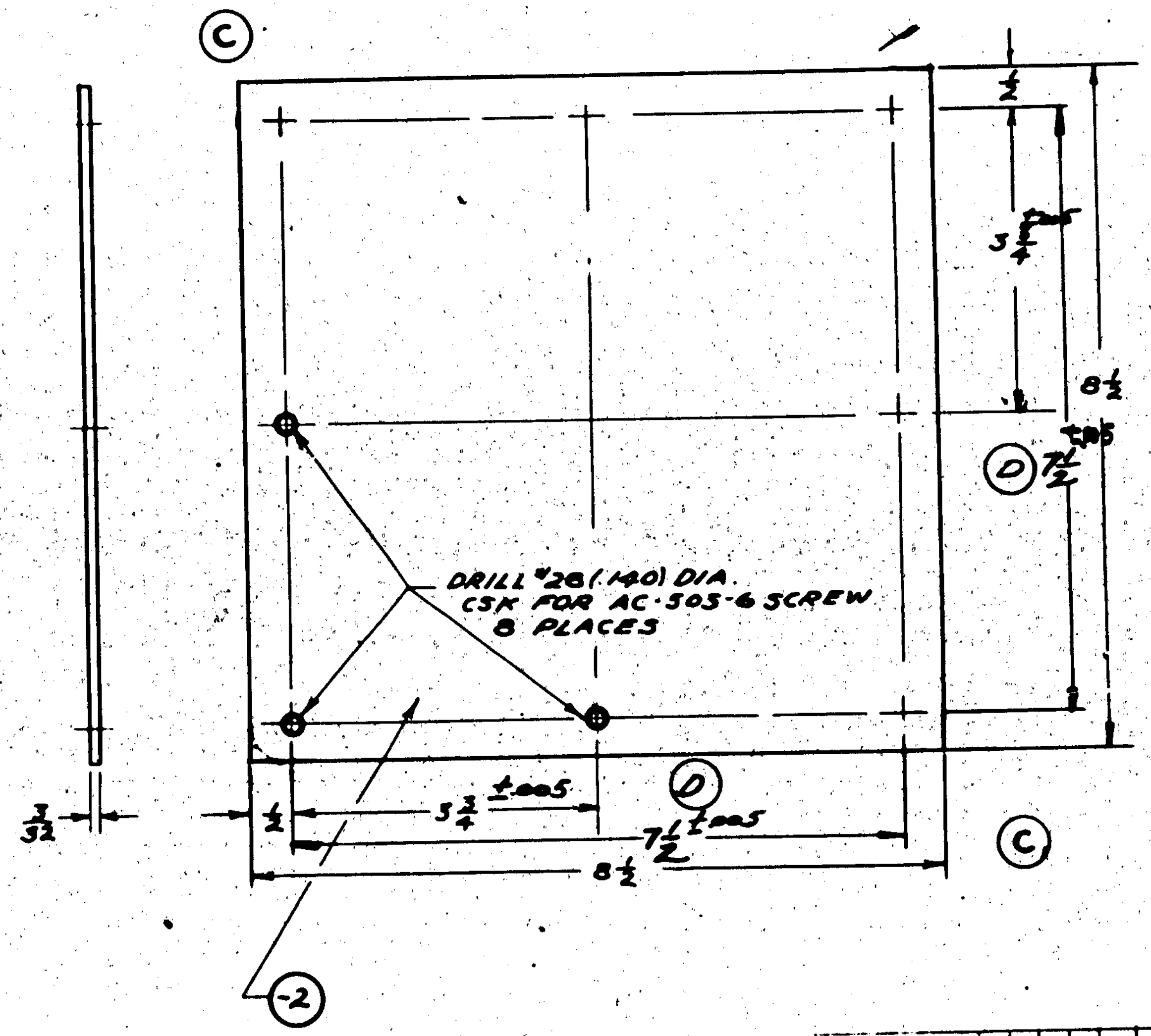

MATERIAL:
PHENOLIC MATERIAL LAMINATED

NAVY SPEC. 17PS GR P.B.G.
(-2) (-3) (-4) (B)

O.H.	MODEL	NEXT ASSY.	REQ.	PARTS	XPBY-1 LH	XPBY-1 RH	PBY-1 LH	PBY-1 RH	PBY-2 LH	PBY-2 RH	PBY-3 LH	PBY-3 RH
-4	PBY-3 & 4	28H1012										
-3	PBY-3 & 4	28H1012										
-2	PBY-3 & 4	28H1023										
-4	PBY-2	28H1012										
-3	PBY-2	28H1012										
-2	PBY-2	28H1023										
-4	PBY-1	28H1012										
-3	PBY-1	28H1012										
-2	PBY-1	28H1023										
-4	XPBY-1	28H1012		28H1022-4	1		1		1		1	
-3	XPBY-1	28H1012		28H1022-3	1		1		1		1	
-2	XPBY-1	28H1023		28H1022-2	1		1		1		1	

REQUIREMENTS PER AIRPLANE — MAT. — PARTS LIST PER ASSY.

REPLACES		APPROVED	4-20-37 DATE
REPLACED BY		CALC. WT.	ACT. WT.
LIMIT ON DIMENSIONS UNLESS OTHERWISE SPECIFIED	+ −	SCALE 6" = 1'-0"	
[redacted]		AC	

NAVY	MATERIAL	SPEC.	HEAT TREAT	FINISH
	NOTED	NOTED	—	NONE

DRAFT	CHECK	EXAM.	ENG.
SCHNABEL 5-19-36	[illegible] 5-13-37	CN MILLER	

CONSOLIDATED AIRCRAFT CORP.
BUFFALO, N.Y.

STAMP PT. No. WHERE SHOWN

NAME: ANCHOR - HULL
RUBBING STRIPS - ANCHOR BOX

OPP. HAND

DWG. D SIZE 28H1022

SUPPLIES & EQUIPMENT CLASSIFICATION			
LET	ALTERATION	DATE	BY
E	TRACED	4-20-37	R.M.
F	AN285-19 WAS AN285-11	1-19-38	RPH
G	AN285-19 STYLE 8 TO AN286-4 STYLE 4	6-19-41	EDWARDS
H	ADDED RELIEF TO SHAFT. DIM 1 1/8 WAS 1 9/16 & DIM. 1 9/16 WAS 1 1/8 WT. CHG. NEG.	4-9-43	HUTCHINSON
J	REMOVED FROM FACE OF DWG. AT -2 CALL-OUT "AL ALLOY CASTG., SPEC M186, H.T 42,000 #/D, FINISH ZPIGP" ADDED NOTE #1. NO WT. CHG	10-4-43	LARSEN
K	CORRECTED VIEW OF MILLED RELIEF ADDED DIM. 5/16. WT. CHG. NEG.	10-26-43	WELCH

"6851

1/4 DIA DRAIN HOLE

5625 REAM 5615 FOR PRESS FIT OF BUSHINGS

1/8

ALL RADII 1/8 UNLESS OTHERWISE NOTED

Q618 BIA 46 BRONZE BUSHING

1 7/16

13/16 DIA

DISC GRIND TOP SURFACE TO DIMENSION SHOWN

1

1/8 — 1 1/2 — SHAFT — 4 5/8

3/4 — 3 — 3/4

(K) 1/8 R

.840"

PRICK PUNCH THIS SIDE 6 PLACES

1/8 R

5/8 DIA BOSS

13/16 — 13/16 — 2 3/8 — 5/16

5/16

(H) 1 1/8 — (H)(K) 1 9/16 — 5/16

CONICAL SHAPE 30°

REAM INSIDE OF BUSHING .4365 .438 DIA HOLE FOR SHAFT

1/8 R

13/16

HOLE

DISC GRIND SURFACE OF FLANGE

2 1/2

(F) AN 286-4 STYLE 4
DRILL 1/4 DIA CSK 100° 1/2 DP
TAP PIPE THD IN BOSS

NOTE:

(J) 1—MATERIAL FOR -2 MAY BE:
(A) AL. ALLOY CASTING, 220T4, SPEC. AN-QQ-A-392, T.S. 42,000 P.S.I., FINISH ZPIGP, OR
(B) AL. ALLOY CASTING, 195T6, SPEC. AN-QQ-A-390, CL. II, T.S. 32,000 P.S.I, FINISH ZPIGP.

FINISH CODE
Z = ANODIZE
P = P27 PRIMER
GP = GREEN PRIMER
FBE = FLAT BLACK ENAMEL

			Q618B1/4-46	1
28-5AMN	28H1026	1		
28-5AMC	28H1026	1		
28-5ME&MN	28H1026	1 EA		
28-5MA&MC	28H1026	1 EA		
PBY-5B	28H1026	1		
PBY-4	28H1026			
PBY-3	28H1026			
PBY-2	28H1026	1		
PBY-1	28H1026	1		
XPBY-1	28H1026		AN286-4 . 1	28H1025-2 . 1
PBY-5	28H1026	1		
PBY-5A	28H1026	1		

O.H. MODEL	NEXT ASSY.	REQ.	ST'D PARTS	LH REQ.	RH REQ.	PART NO.	LH REQ.	RH REQ.

REPLACES 28H1023 of 3-20-36
REPLACED BY
LIMIT DIMENSIONS UNLESS OTHERWISE SPECIFIED ± 1/32
APPROVED 4-20-37 DATE
.53 CALC. WT. ACT. WT.
SCALE 12" = 1'-0"
AC
NAVY NOTED
MATERIAL

REQUIREMENTS — PLANE — MAT. NOTED — PARTS LIST PER ASSY.

NOTED | NOTED | NOTED | 2 FBE | FRAME | CH.

4-8-36 | 5-15-37 | DRAFT | CHECK | EXAM. | ENG.

CONSOLIDATED AIRCRAFT CORP. BUFFALO, N.Y.
STAMP PT. No. WHERE SHOWN

NAME ANCHOR CRANK SHAFT BRACKET ASSY

OPP. HAND

DWG D SIZES 28H1023

ENG. FILE

SUPPLIES & EQUIPMENT CLASSIFICATION			
LET	ALTERATION	DATE	BY
F	TRACED	7-26-37	[redacted]

LINE REAM .375 +.001 DIA FOR PRESS FIT OF BUSHINGS

Q612-8-8 PRESS FIT BUSHING.

APP 3/16 R TRUE RAD.

ROUND OFF EDGE APPROX. 1/8 R.

1 27/32

REF 40° APPR.

(2) AL. ALLOY (CASTING) SPEC. 46A1 CL4. H.T. 29,000 #/□" FINISH ZP 2BC

4 7/16

PRICK PUNCH ON UNDERSIDE 3 PLACES

1/8 R

1/16 R

3/4 DIA

1 1/8 R

9/16 R

3/4

9/32

1/8

3 5/8

2 3/4

1 3/16

1/4 R.

1 5/16

5/16

3/4

5/16

CASTING & CABLE ℄

DRILL #11 (.1910) DIA 5 HOLES IN BASE

1/8

ROUND SHARP CORNERS

1 7/8

1/8 (REF)

1 3/8 (REF)

1 1/4

5/8

DISC GRIND LOWER SURFACE

TO HOR REF. 17 3/16 LINE

1/8 R

5/32 DIA PILOT HOLES

5°

ALL RADII 1/8 UNLESS OTHERWISE NOTED

SECTION A-A

2 13/32

40° (REF)

A

A1

3/8 RAD.

SKIN LINE AT FRAME #0.66

TRUE LENGTH 2 1/4

1 3/8

3/8

1 1/8

3/4

7/8

3 5/8

43.50°

28 3/8 TO ℄ SHIP (REF.)

BC-BITUMASTIC COMPOUND

[redacted] CODE

								Q612-8-8	2	
	PBY-5B	28H1026	1							
	PBY-5A	28H1026	1							
	PBY-4	28H1026								
	PBY-3	28H1026								
	PBY-2	28H1026								
	PBY-1	28H1026						28H1034-2	1	
O.H.	MODEL	NEXT ASSY.	REQ.	ST'D PARTS	LH REQ.	RH REQ.	PART NO.		LH REQ.	RH REQ.

REPLACES

REPLACED BY

LIMIT ON DIMENSIONS UNLESS OTHERWISE SPECIFIED ± 1/32

[redacted]

APPROVED [redacted] DATE 7-26-37

CALC. WT. .51 ACT. WT.

SCALE 12"=1.0"

AC

NAVY NOTED MATERIAL

REQUIREMENTS PER AIRPLANE | MAT. | PARTS LIST PER ASSY.

NOTED SPEC. | NOTED HEAT TREAT | NOTED FINISH

	[redacted]	[redacted]	[redacted]	
DRAWN	5-5-36	7-26-37	5-10-36	
DRAFT	CHECK	EXAM.	ENG.	

CONSOLIDATED AIRCRAFT CORP. BUFFALO, N. Y.

STAMP PT. No. WHERE SHOWN

NAME BRACKET ASSEMBLY

ANCHOR BOX INTERIOR-PULLEY-OUTER

OPP. HAND

CODE D 81228

28H1034

BULLETIN-REPRODUCO CO., INC. BUFFALO
IMPERIAL TRACING CLOTH

SUPPLIES & EQUIPMENT CLASSIFICATION			
LET	ALTERATION	DATE	BY
F	TRACED	7-22-37	BMC
G	NUT & BOLT OF STAINLESS STEEL WERE AN320-8 & AN28-27 (-4 BOLT & -5 NUT) ADDED PBY-5 RQTS.	12-2-37	Mitchell
		1	1
H	ON FACE, FOR -2 & -3, REMOVED "STAINLESS STL. ROD 46518 & GR. 7" ADDED MAT'L NOTE "1"	1-26-38	

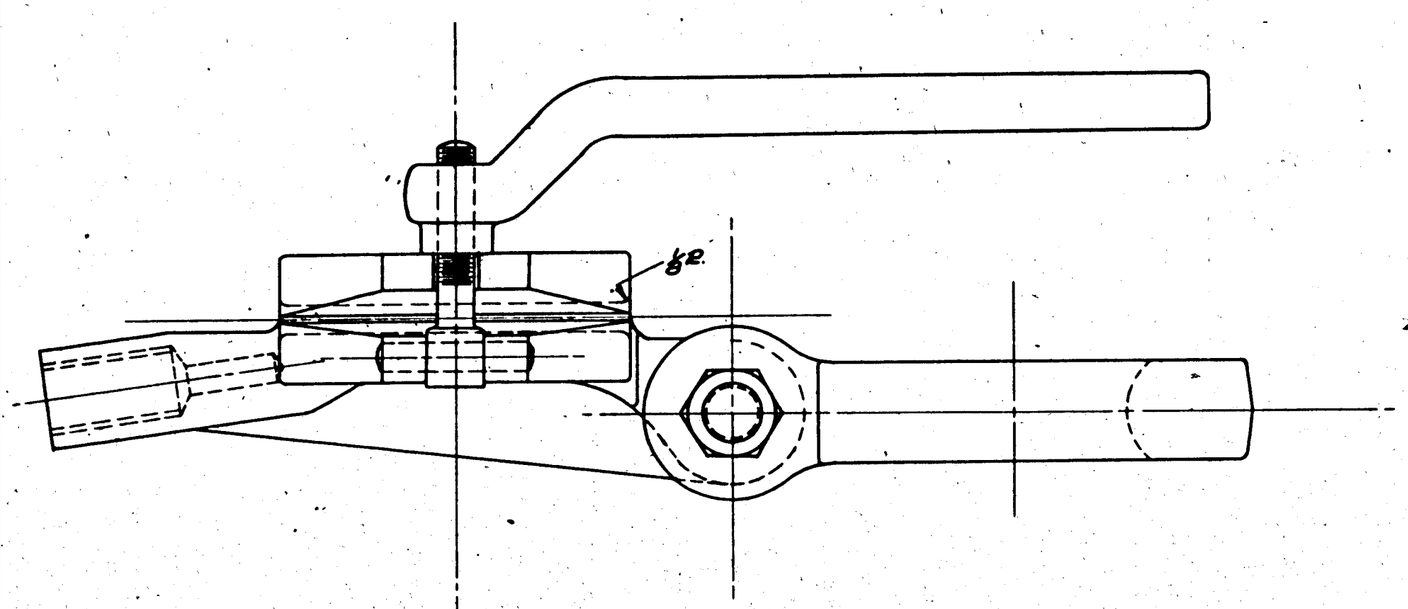

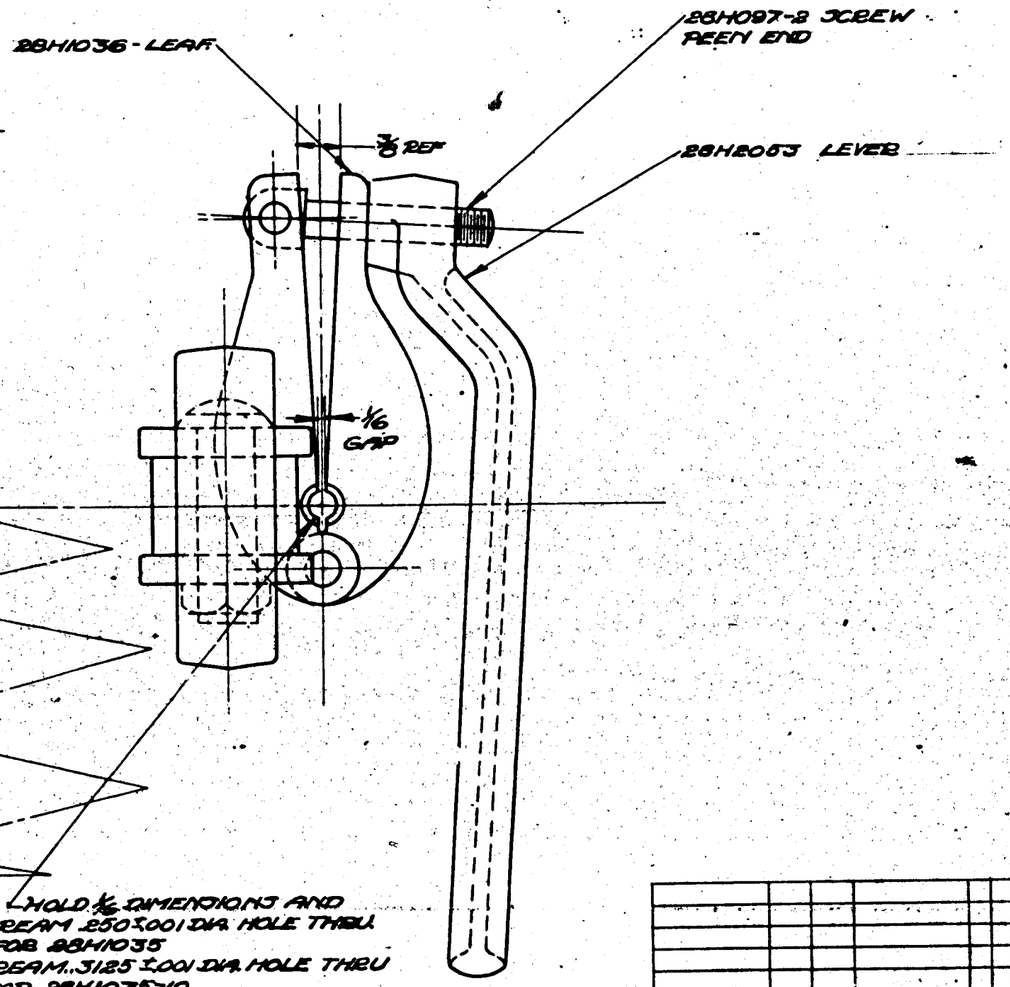

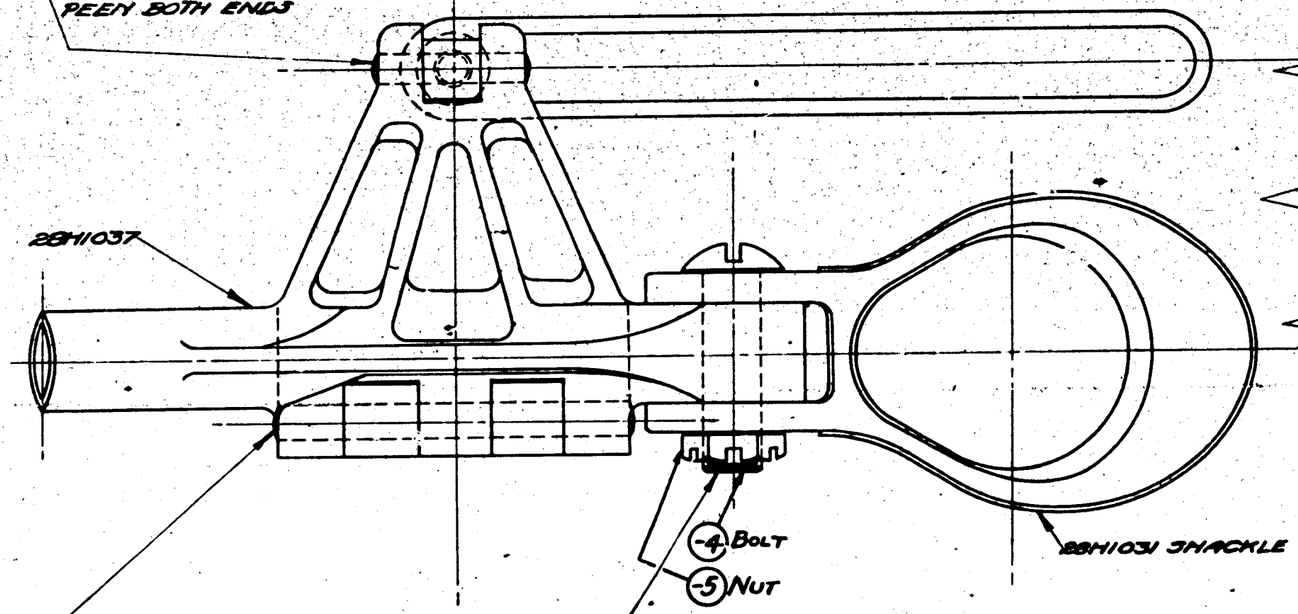

(-3) 1/2 DIA. x 1 3/32 — PEEN BOTH ENDS

(-2) 5/16 DIA. x 3 1/16 — PEEN BOTH ENDS

(G) NUT & BOLT TO BE MADE OF STAINLESS STEEL, SPEC. 46518-GR. 7, TYPE E, TO DIMENSIONS OF AN320-8 NUT & AN28-27 BOLT. AN380-C3-3 COTTER PIN MARK "SPECIAL" ON BOLT HEAD AND ON FLAT OF NUT.

HOLD 1/16 DIMENSION AND REAM .2500/.2001 DIA. HOLE THRU FOR 28H1035
REAM .3125/.3001 DIA. HOLE THRU FOR 28H1035-10

MAT'L. NOTES-
1- MAT'L. FOR -2 & -3 MAY BE-
(A) STAINLESS STEEL ROD, SPEC. AN-QQ-S-771, COMP. FM, COND. B, OR
(B) STAINLESS STEEL ROD, SPEC. AN-QQ-S-771, COMP. G, COND. A.

	28-5'S	28H1012	1EA.					28H1035-5	1 / 1
	PBY-5B	28H1012	1					28H1035-4	1 / 1
	PBY-5A	28H1012	1					28H2005	1 / 1
	PBY-5	28H1012	1					28H1037	1 / 1
	PBY-4	28H1012						28H1036	1 / 1
-10	XPB2Y-1	28H1020	1					28H1031	1 / 1
	PBY-3	28H1012	1	AN380-C3-3	1			28H1097-8	1 / 1
	PBY-2	28H1012	1					28H1035-3	1 / 1
	PBY-1	28H1012	1					28H1035-2	1 / 1

REPLACES															PART NO.	LH REQ.	RH REQ.	A & B	A & B -10
REPLACED BY																			
LIMIT ON DIMENSIONS UNLESS OTHERWISE SPECIFIED	+ 1/64 −	APPROVED		DATE	7-26-37														
CALC. WT.	ACT. WT.	O.N.	MODEL	NEXT ASSY.	REQ.	ST'D PARTS	REQUIREMENTS PER AIRPLANE			MAT.	PARTS LIST PER ASSY.								
3.68											DRILLING	ASSEMBLY	MILLER						
SCALE 12" = 1'-0"											9-14-37	7-26-37							
AC											DRAFT	CHECK	EXAM.	ENG.					
NAVY NOTED		NOTED		NONE		NONE					OPP. HAND 28H1035-10								
MATERIAL		SPEC.		HEAT TREAT		FINISH													

CONSOLIDATED AIRCRAFT CORP. BUFFALO, N. Y.

STAMP PT. No. WHERE SHOWN

NAME: CLAMP ASSEMBLY ANCHOR LINE MOORING

SIZE D — DWG. 28H1035

SULLIVAN-SCHOHAN CO., INC. BUFFALO
INTERNAL TRACING CLOTH

SUPPLIES & EQUIPMENT CLASSIFICATION			
LET	ALTERATION	DATE	BY
M	TRACED UP TO DATE	7-23-37	
N	WAS REAM .3125 +.0005 -.001	1-29-38	
O	1 13/16 DEEP WAS 1 1/16	1-29-38	
P	REVISED AND VIEWS OF CASTING TO CLARIFY DWG	4-16-40	
Q	TOLERANCES WERE .005 ±.010 4.625 ±.005	4-29-40	
R	1.247 +.003 -.008 DIM. WAS 1.257 ±.008	7-2-40	
S	CHANGED DIM. 1/2 WAS 11/16	9-30-40	
	ADDED NOTE	9-30-40	
T	ADDED HOLE IN CASTING	12-13-40	
U	CHG'D DIM. 7/8 WAS 5/8, 3 5/16 WAS 3 7/16	8-8-41	
V	DIM. .505 +.003 -.005 WAS .500 ±.005 RD WT CHG.	12-30-42	

E.O. 20667

E.O. A11633

DRILL #F(257)

TAP DRILL 1/2 DEEP
TAP 5/8-18 N.F. 3
15/16 DEEP

T DRILL #10 (.1935) THRU

REAM -.500 +.0005 -.001

NOTE:
ALL UNMARKED RADII 1/8 & 1/4

P

U

REAM -.250 +.0005 -.001 THRU.

DRILL .3125 +.006 -.001 THRU.
N

V

.505 +.003 -.005

-2 STAINLESS STEEL CASTING
SPEC. 46327
70000 #/□"

FINISH - C

S BREAK CORNERS OF MACHINED SURFACES

P

U

-3 SPEC. COMML. SOFT BRASS

MILL SLOT 7/32 R x 3/16 DEEP
HEAT PART & POUR SOFT
BRASS AS SHOWN

DRILL 3/32 DIA x 1/8
4 PLACES TO
ANCHOR -3

[redacted]

	28-5PM4(RPM	28H1035	1 EA.										
	28-5PM4(APC	28H1035	1 EA.										
	28-5PM4(ME	28H1035	1 EA.										
	PBY-5B	28H1035	1										
	PBY-5A	28H1035	1										
	PBY-5	28H1035	1										
	PBY-4	28H1035											
	XPBZY-1	28H1035-1											
	PBY-3	28H1035											
	PBY-2	28H1035										28H1037-3	1
	PBY-1	28H1035										28H1037-2	1
				O.H.	MODEL	NEXT ASSY.	REQ.	STD PARTS	LH REQ.	RH REQ.	PART NO.	LH REQ.	RH REQ.

REPLACES	APPROVED [redacted]	7-23-37 DATE	PARTS LIST PER ASSY.
REPLACED BY	.93 CALC. WT.	ACT. WT.	REQUIREMENTS PER AIRPLANE
LIMIT OR DIMENSIONS UNLESS OTHERWISE SPECIFIED ± 1/64	SCALE 12"=1'-0"		MAT.
[redacted]	AC		
	NAVY NOTED	NOTED	NOTED
	MATERIAL	SPEC.	HEAT TREAT
	CONSOLIDATED AIRCRAFT CORP. BUFFALO, N. Y.		FINISH
	STAMP PT. No. WHERE SHOWN		NAME LEAF - ANCHOR LINE - CLAMP-CABLE ATTACH

DRAFT	CHECK	EXAM.	ENG.
5-7-36 [redacted]			
PROJECT 7-8-37			

OPP. HAND

SIZE D

28H1035

DULLAM-MORRISON CO., INC. BUFFALO
IMPERIAL TRACING CLOTH

SUPPLIES & EQUIPMENT CLASSIFICATION			
LET	ALTERATION	DATE	BY
C	TRACED	4-19-37	V.I.B
D	19 1/2 WAS 19 1/4; 5 WAS 5 1/8; 11 1/2 WAS 11 3/8; 3 1/8 WAS 3 1/4	10-6-37	[illegible]
E	5/8 WAS 5 1/2; 1/2 R WAS 1/8	10/44	[illegible]

CA 16964

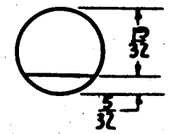

SECTION A-A
MILL AS SHOWN

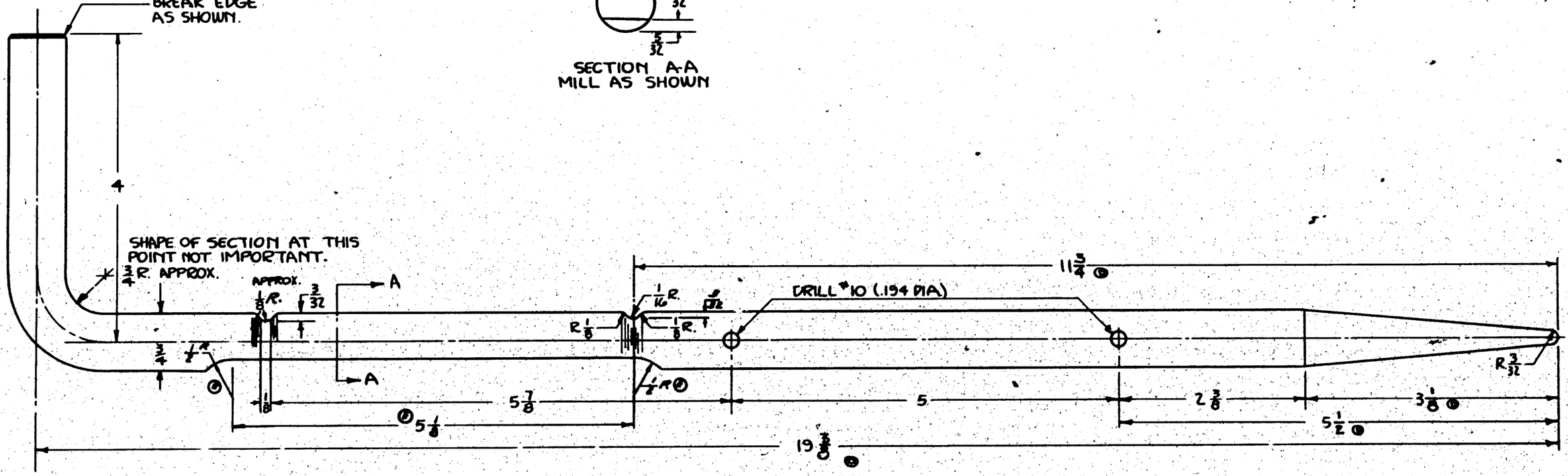

FINISH CODE	
Z	ANODIC TREATMENT
P	P-27 PRIMER
AP	ALUMINIZED PRIMER
C	CADMIUM PLATE

BL- BLACK LACQUER

O.H.	MODEL	NEXT ASSY.	REQ.	ST'D PARTS	LH REQ.	RH REQ.	PART NO.	LH & RH REQ.
	PBY-5B	28H3015	4					
	PBY-5	28H3005	4					
	PBY-4	28H3005-1						
	PBY-4	28H3005						
	PBY-3	28H3005-1						
	PBY-3	28H3005						
	PBY-2	28H005-1						
	PBY-2	28H005						
	XP3Y-1	28H005-1						
	XP3Y-1	28H005						
	PBY-1	28H005-1						
	PBY-1	28H006						

REQUIREMENTS PER AIRPLANE

REPLACES 28H048
REPLACED BY
LIMIT ON DIMENSIONS UNLESS OTHERWISE SPECIFIED ± 1/32
APPROVED [signature] 4-19-37 DATE
CALC. WT. 2.56 ACT. WT.
SCALE 12" = 1'-0"
AC
NAVY [illegible] CHR. MOL. ROD — MATERIAL
4GS23 — SPEC.
N.A.F. SH. 21-5 [illegible] — HEAT TREAT
C-2P-1BL. — FINISH
MAT.
PARTS LIST PER ASSY.
DRAWN 3-15-35 TRACED 5-8-37 CHECKED 3-12-35
DRAFT CHECK EXAM. ENG.

CONSOLIDATED AIRCRAFT CORP. BUFFALO, N. Y.
STAMP PT. No. WHERE SHOWN

NAME
LOCK PIN - UPPER BEACHING GEAR

OPP. HAND
SIZE D CODE
28H1048

SULLIVAN-STEINBRENNER CO., INC., BUFFALO

SUPPLIES & EQUIPMENT CLASSIFICATION			
LET	ALTERATION	DATE	BY
A	TRACED	4-19-37	V.I.B

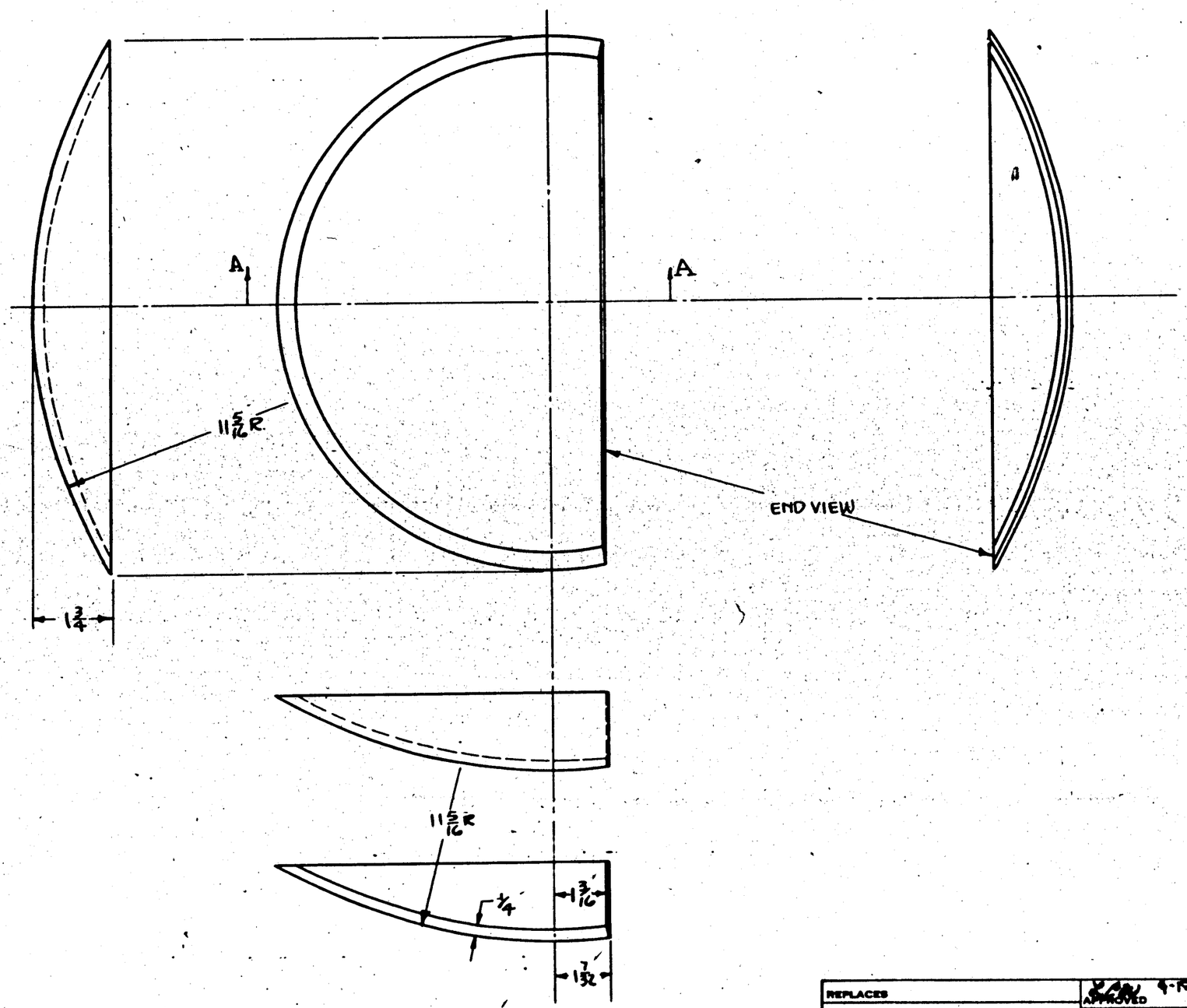

SECTION A-A

NOTE:-
REFER TO: THE FORMICA INSULATION COMPANY
DRAWING Nº 1241

	PBYSA&B	28H1012	1EA												
	PBY-4	28H1012													
	PBY-3	28H1012													
	PBY-2	28H1012													
	PBY-1	28H1012													
	KP3Y-1	28H1012													

O.H.	MODEL	NEXT ASSY.	REQ.	ST'D PARTS	LH REQ.	RH REQ.	PART NO.	LH REQ.	RH REQ.

REPLACES

REPLACED BY

LIMIT ON DIMENSIONS UNLESS OTHERWISE SPECIFIED ± 1/32

APPROVED [signature] 4-20-37 DATE

CALC.WT. .76 ACT.WT.

SCALE 6"-1'-0"

AC

NAVY PHENOLIC MAT. LAMIN. MOLDED

MATERIAL

CONSOLIDATED AIRCRAFT CORP. BUFFALO, N. Y.

STAMP PT. No. WHERE SHOWN

REQUIREMENTS PER AIRPLANE

MAT. | PARTS LIST PER ASSY.

17P5 FBG	NONE	NONE
SPEC.	HEAT TREAT	FINISH

R.M. [signature] CN

CHKD. [signature]

6-22-37 5-19-37 MILLER.

DRAFT | CHECK | EXAM. | ENG.

NAME RUBBING DISC. - HULL ANCHOR BOX BOTTOM

OPP. HAND

SIZE D

28H1055

DUPLICATOR-BLUEPRINT CO., INC. BUFFALO
IMPERIAL TRACING CLOTH

LET	ALTERATION	DATE	BY
N	TRACED NO WT. CHG.	9-14-43	CARTER
P	NAF 1088-2C-5(1)-2 ASSY WAS NAF 29500-2C-5 & NAF 1088-2C-8 (1) EA FOR -3, -5, -6 & -7 ASSYS. WAS NAF 29500-2C-8 NO WT. CHG.	9-27-43	CARTER
Q	IN B/M, REPLACED "7/8 DIA X 1 1/4, ST. STL. ROD AN-QQ-S-771" WITH "NOTED." FOR -4, ADDED NOTE "1" NO WT CHG.	10-8-43	CARTER

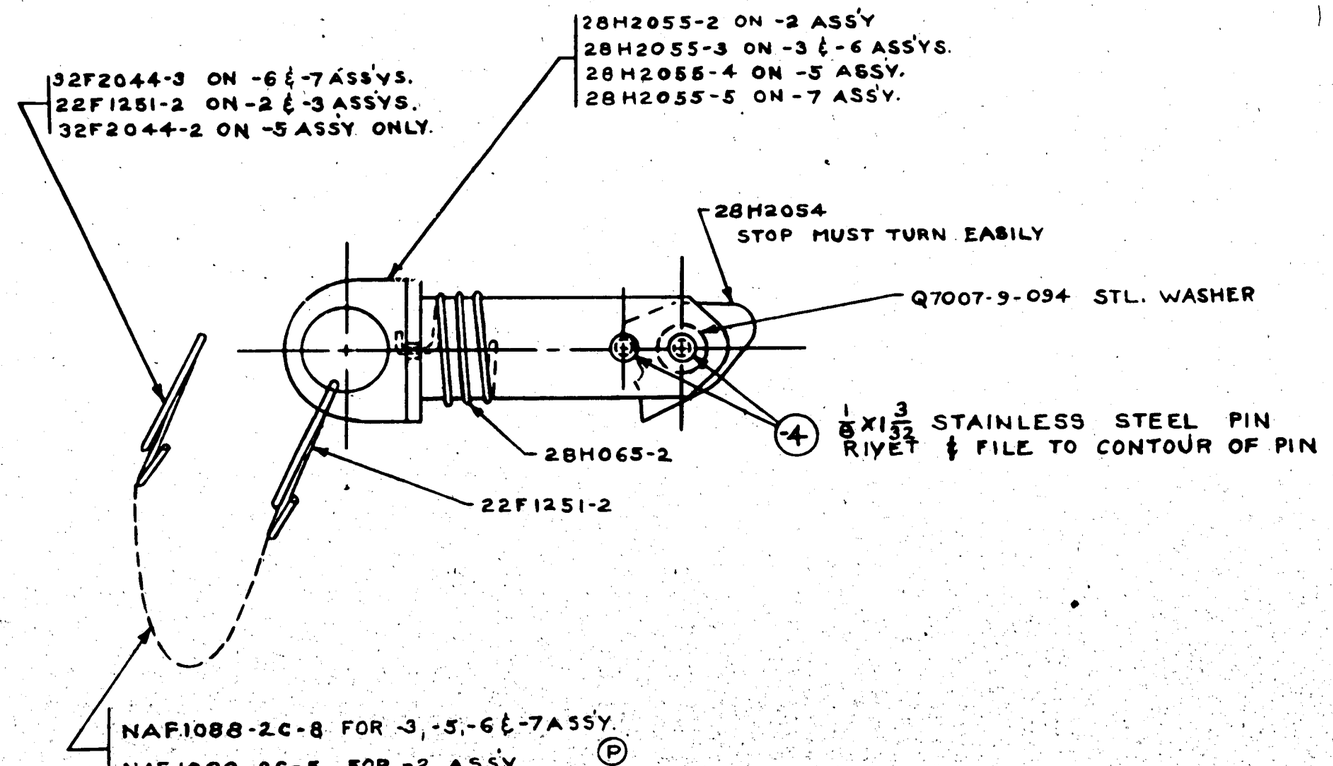
32F2044-3 ON -6 & -7 ASS'YS.
22F1251-2 ON -2 & -3 ASSYS.
32F2044-2 ON -5 ASSY ONLY.
28H2055-2 ON -2 ASS'Y
28H2055-3 ON -3 & -6 ASS'YS.
28H2055-4 ON -5 ASSY.
28H2055-5 ON -7 ASS'Y.
28H2054
STOP MUST TURN EASILY
Q7007-9-094 STL. WASHER
28H065-2
22F1251-2
-4
1/8 X 1 3/32 STAINLESS STEEL PIN
RIVET & FILE TO CONTOUR OF PIN
NAF1088-2C-8 FOR -3, -5, -6 & -7 ASSY. (P)
NAF1088-2C-5 FOR -2 ASSY.

NOTES-

(Q) 1- MAT'L. FOR -4 MAY BE-

(A) 1/8 DIA. X 1 1/4, STAINLESS STEEL ROD, SPEC. AN-QQ-S-771, COMP. FM, COND. B, OR

(B) 1/8 DIA. X 1 1/4, STAINLESS STEEL ROD, SPEC. AN-QQ-S-771, COMP. G, COND. A.

ASS'Y. NO.	WEIGHT
-2	.48#
-3	.50#
-5	.49#
-6	.47#
-7	.48#

EFF. #1 PROD. AIRPLANE & EVERY 10TH AIRPLANE

EVERY 10TH PLANE

PURCHASE TO DWG. WITH NEXT ASS'Y.

#1 TO #770 & EVERY 10TH PLANE BEGINNING WITH #780

(TOTAL 25) C. NOS. 1 & 4 & 1-100
(TOTAL 112) C. NOS. 3 & 4 & 101 (on)
(TOTAL 124) C. 91876, 91 & ON
C. 70496-77713 & 88476
C. 70496 & 91876 #1 TO 90

-6	PB4Y-2	32H011	1	
-5	PP4Y-2	32H011	1	
-5-6	B24C	32H011	1E	
-6	B24E	32H011	1	
-5	B24E	32H011	1	
-6	XP4Y-1	31F166	1	
-5	XP4Y-1	31F166	1	
-7	XB-32	33F2548	1	
-6	LB-30	32H011	1	
-5	LB-30	32H011	1	
-6	B-24D	32H011	1	
-5	B-24D	32H011	1	
-6	B-24A	32H011	1	
-6	B-24	32H011	1	
-6	XB-24	32H011	1	
-5	B-24A	32H011	1	
-5	B-24	32H011	1	
-5	XB-24	32H011	1	
-2-3	PBY-5A	28H1003	1EA	
-2-3	PBY-5	28H1003	1EA	
-2-3	PBY-5A	28H1003	1EA	
-2-3	PBY-5	28H1003	1EA	
-2-3	28-5AMN	28H1003	1EA	
-2-3	28-5AMC	28H1003	1EA	
-2-3	28-5MN	28H1003	1EA	
-2-3	28-5ME	28H1003	1EA	
-2-3	28-5MC	28H1003	1EA	
-2-3	28-5MA	28H1003	1EA	
-2-3	PBY-5B	28H1003	1EA	
-3	PBY-4	28H1003-20		
-2	PBY-4	28H1003-20		
-3	PBY-3	28H1003-20		
-2	PBY-3	28H1003-20		

ASSY. DASH NO.	MODEL	NEXT ASSY.	REQ.
REQUIREMENTS PER AIRPLANE			
REPLACED 28H2056, 11-1-37		NOTED CALC. WT.	
REPLACED BY		ASY. WT.	
UNLESS OTHERWISE SPECIFIED	SCALE 12"= 1'-0"		
STAMP PART NUMBER WHERE SHOWN			

PART No.	STOCK	MATERIAL	SPEC.	LH REQ. -2	RH REQ. -2	LH REQ. -3	RH REQ. -3	LH REQ. -5	RH REQ. -5	LH REQ. -6	RH REQ. -6	LH REQ. -7	RH REQ. -7
Q7007-9-094				1	1	1	1	1	1	1	1	1	1
NAF1088-2C-8													
NAF1088-2C-5													
32F2044-3										1	1	1	1
32F2044-2								1	1				
22F1251-2				2	2								
28H2055-5												1	1
28H2055-4								1	1				
28H2055-3						1	1						
28H2055-2				1	1								
28H2054				1	1	1	1	1	1	1	1	1	1
28H065-2				1	1	1	1	1	1	1	1	1	1
28H2056-4	NOTED	NOTED	NOTED	2	2	2	2	2	2	2	2	2	2

PARTS LIST PER ASSY. -2 -3 -5 -6 -7

AC NONE		ERBELSUS		MOFFATT	L.C.W	
NAVY NONE		5-28-37	11-2-37		11-1-37	
HEAT TREAT	FINISH	DRAFT	CHECK	STRUCT	ENGR	APPROV	ENG.

NAME PIN ASSEMBLY-FURNS. HOISTING SLING

CONSOLIDATED VULTEE AIRCRAFT CORP. SAN DIEGO DIVISION SAN DIEGO, CALIF.

OPP. HAND

SIZE D 28H2056

R9502H82

SUPPLIES & EQUIPMENT CLASSIFICATION			
LET	ALTERATION	DATE	BY
A	TRACED	4-20-37	V.I.G

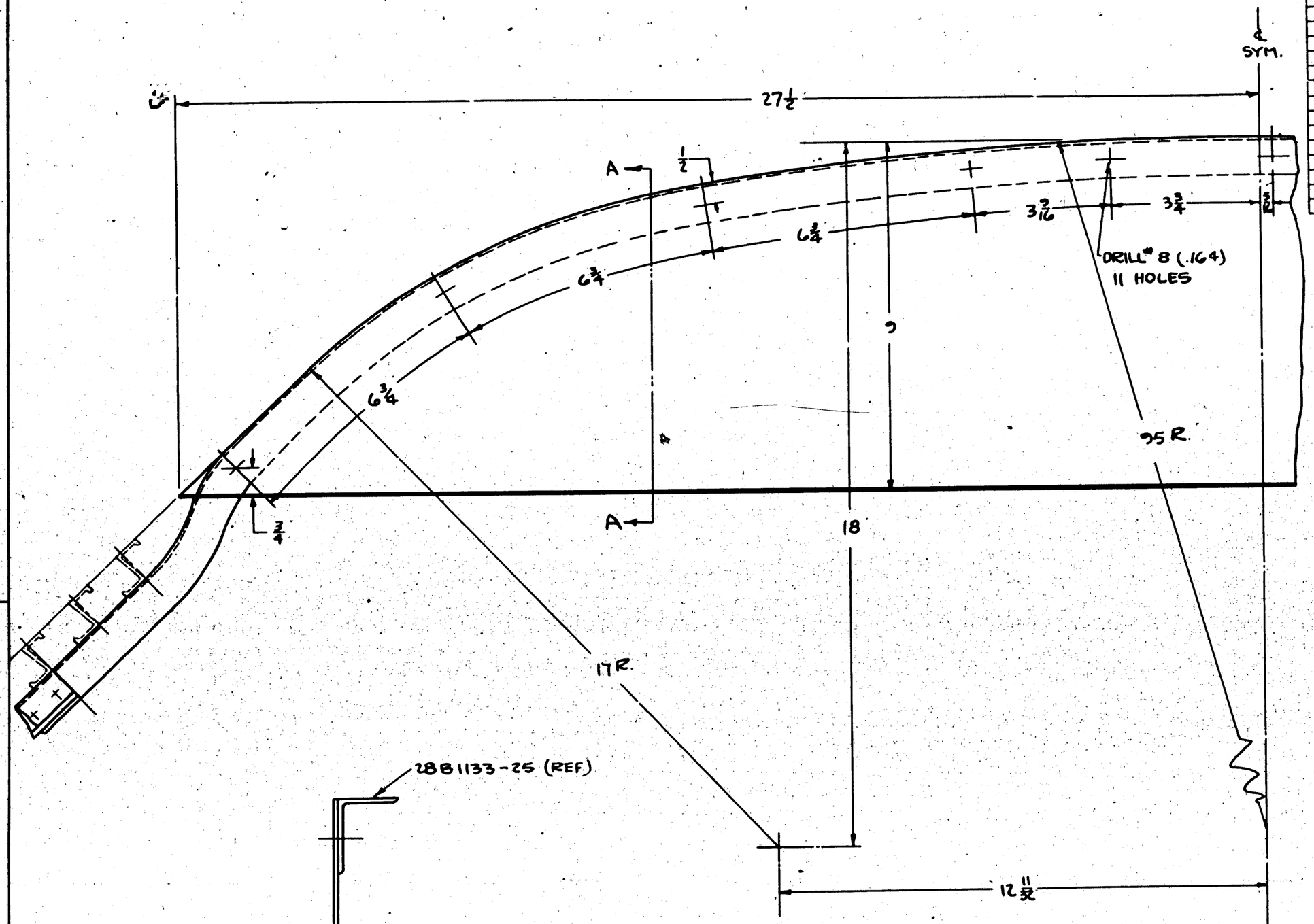

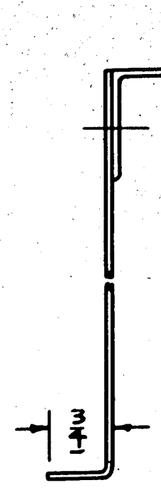

NOTE:- THIS PLATE IS A TEMPORARY PART TO MAINTAIN THE UPPER CONTOUR AT THIS STATION UNTIL INSTALLATION OF PILOTS INST. PANEL, AND IS NOT A PART OF THE COMPLETED ARTICLE.

	PBY-5B	28B1133								
	PBY-5A	28B5015								
	PBY-4	28B1128								
	PBY-2	28B1123								
	PBY-2	28B1123								
	PBY-1	28B1133								
								LH REQ.	RH REQ.	PART NO.	LH REQ.	RH REQ.
O.H.	MODEL	NEXT ASSY.	REQ.	ST'D PARTS	MAT.	PARTS LIST PER ASSY.						
REQUIREMENTS PER AIRPLANE												
NONE	NONE			NONE								
SPEC.	HEAT TREAT			FINISH		DRAFT	CHECK	EXAM.	ENG.			
						J.G.S.						
						1-14-38	5-8-37	5-14-38				

REPLACES

REPLACED BY

LIMIT ON DIMENSIONS UNLESS OTHERWISE SPECIFIED ± 1/32

[redacted]

KCW 4-20-37 APPROVED DATE

CALC. WT. ACT. WT.

SCALE 6" = 1'-0"

AC

NAVY ¼ GALV. IRON

MATERIAL

CONSOLIDATED AIRCRAFT CORP. BUFFALO, N. Y.

STAMP PT. No. WHERE SHOWN

NAME

PLATE - HULL
TEMP. TIE - BELTFRAME 1.33

OPP. HAND

DWG. D SYMBOL

28J1000

SULLIVAN-HUTCHINSON CO., INC. BUFFALO
IMPERIAL TRACING CLOTH

SUPPLIES & EQUIPMENT CLASSIFICATION			
LET	ALTERATION	DATE	BY
D	TRACED	4-21-37	H.W.
E	-11 & PBY-2 & PBY-3 REQ. ADDED, TRACED FROM BREWSTER DRWG B-30814 AFTER CHG. LET "G"	11-9-37	[illegible]
F	3/16 WAS 9/16	12-31-37	Maurer
G	ON FACE OF DWG. MAT'L NOTE FOR -5 WAS "3/4 X 3/4 ANGLE LH DIE "KS401". NOTE FOR -4 WAS "3/4 X 3/4 X 1/16 ANGLE DIE "KS401." NOTE FOR -3 & -2 WAS "7/8 X 7/8 X .062 EXT. ANGLE DIE "K-9876." REMOVED BRKN NOS "-2 & -3" FROM NOTE "THE FOLLOWING PARTS TO BE COND. A ---- -11". REVISED REV. PLATE BLOCK.	MT. CHG. REQ.	H.L.S.	[illegible]

E.O. (BREWSTER) 292

(-5) .064 SHEET L.H.

(-6) R.H.

(-4) MAKE FROM Y-Z-AZ8T. (G)

SLOPE OF FLANGE TO DECREASE GRADUALLY FROM 11° AT THIS POINT TO 4° AT UPPER END OF FLANGE

STAMP PART NO. HERE

C=11°

C=12°

C=13°

C=15°

C=19°

C=26°

SYMMETRICAL ABOUT

(-9) (-10) MAKE FROM Y-6-AGT. (G)

NOTE:- SLOPES SHOWN IN SECTIONS A-A & BB ARE NOT SHOWN HERE

(-2) L.H. (G)

MAKE FROM Y-Z-AZ8T.

(-3) R.H.

CHINE LINE

PBY-1 ONLY .051 SHEET (-7)

-20 ASSY ONLY (-11) SEE DETAIL

ALL RIVETS AN442-D6

VIEW LOOKING FORWARD

NOTE:- THE FOLLOWING PARTS TO BE COND. "A":- -5, -6, -7, -11. (G)

CHINE ANGLE (PBY-1 ONLY) GUSSET FITS AGAINST SKIN ON PBY-2 & PBY-3.

SECTION A-A
SCALE 12"=1'-0"

BELT FRAME DIMENSIONS ARE GIVEN TO INSIDE OF SKIN IN THIS PLANE.

KEEL (PBY-1 ONLY) GUSSET FITS AGAINST SKIN ON PBY-2 & PBY-3

SLOPE OF BOTTOM TO DECREASE GRADUALLY FROM 1° AT CHINE TO 0° AT KEEL.

(-11) REF DETAIL - SAME AS -7 EXCEPT FOR DIMS. SHOWN. -11 IS USED ON -20 ASSEM.

SECTION B-B
SCALE 12"=1'-0"

-11	-6
-10	-8
-9	-7
-7	PBY-1 ONLY
-6	-5
-5	-4
-4	-3
-3	-2
28L017-2	A-30814-1
CONSOLIDATED	[illegible]

CONVERSION TABLE FOR DASH NOS.

| -20 ASSEM. | | |

SUPPLIES & EQUIPMENT CLASSIFICATION

LET	ALTERATION	DATE	BY
A	TRACED	4-22-37	MASSIE
S	CHANGED METHOD OF FASTENING NUT TO FLANGE APPLIED AC500A-6-4, AC995-C32-3, A.T.960 DG 4.1380-2-2 W-3 AN380-2-6 REQD.	6-4-37	NELSON
T	INCORP. C.O. #6766. WAS AC995-C32-3	1-25-38	BOWEN
U	REMOVED AN960-D6	1-25-38	BOWEN
V	CHG'D -4 "FAFNIR 55FT BALL B'RG." TO NORMA-HOFFMAN S-5 BALL B'RG. NOW [illegible]	3-25-38	APPROVED MAN
W	AN502-8-5 WAS AN520-8-5, NOW AN502-8-13	4-13-42	
X	NOTE: "FAFNIR---BE42" WAS "NORMA ---EQUIV." WT. CHG. NEG.	8-28-42	FUNK

E.O. #017 (BREWSTER) E.O. A54303

(W) AN502-8-5
AN935-8
(UNDER SCREW HEAD)

ASSY # TO BE ON COVER (REF.) AS SHOWN FOR L.H. 28L032-1 FOR R.H.

28L042
28L042-1
28L1000
28L1012-3

(V) (X) -4 FAFNIR 55K OR NORMA HOFFMAN SER BALL B'RG. C.A.C. BE42. 28L040-2

-2 FAFNIR SEALED KC8 OR EQUIVALENT 28L039 28L1011

28L1059
AN 320-4
AN 380-2-2
AC-945-4

28L1013 (S) AC500A-6-4 (U)

(S) AN 380-2-2
DRILL #50(.070) 2 HOLES WITH NUT IN PLACE AFTER SETTING GEARS IN CORRECT MESH

MAKE THIS ANGLE AS GREAT AS POSSIBLE

(T) DRILL #50 (.070) THRU 4 LUGS OF ADJUSTING NUT, AFTER SETTING GEARS, LACE LOCKWIRE THRU & AROUND LUGS APPROX. AS SHOWN.

AC995-32-12 LOCKWIRE — 1 PLACE (DRAW UP VERY TIGHT)

CAUTION:- KEEP LOCKWIRE CLEAR OF ROTATING SHAFT.

VIEW AT A-A

28L1006-3 GASKET

28L1059

28L1058

III

2/32

II

I

RATIO 1:1.867

28L105
AN 320-4
AN 380-2-2
AC 945-4

-2 FAFNIR SEALED KC8 BALL BEARING OR EQUIVALENT

28L040-3
28L012-2
28L1001
28LC[illegible]-LH
28L033-1-RH

-3 NORMA-HOFFMANN 202-PP SEALED BALL BEARING OR FAFNIR 202-KDD OR EQUIVALENT

28L036
28L038

LUBRICATION
- FILL ONLY TO 1/4" FROM BOTTOM WITH MOBIL GREASE #2 OR ~ (OR EQUIVALENT)
- COLD TEST LUBRICANT → KALREX #1

SERVICE NOTE: IF REPLACEMENT OF ONE OF THE GEARS IS NECESSARY REPLACE BOTH OF THE PAIR OF GEARS AND NOT ONE PART ONLY.

ON XP3Y-1
GEAR RATIO = 1:1.5
WITH GEARS #28L035 & #28L037

NOTE FOR ADJUSTMENT OF GEARS

AFTER ASSEMBLING AS SHOWN, ALLOWING SLIGHTLY MORE PITCH CLEARANCE THAN NECESSARY, TIGHTEN THE 1/4" END NUTS ON SHAFTS, THUS SECURING CORRECT RELATIVE POSITION OF PARTS ON EACH SHAFT.

THEN ADJUST WITH I-II & III FOR CORRECT MESH WITH BACKLASH OF .004 MAX AT PITCH DIAMETER.

NOTE: THAT NUT I CAN BE TURNED IN (OR OUT), MOVING THE WHOLE SHAFT ASSEMBLY WHILE NUT III MUST BE BACKED BEFORE TIGHTENING NUT II (OR VICE VERSA)

MAKE SURE THAT BEFORE DRILLING FOR COTTER PINS AS NOTED, NUTS II & III ARE TIGHT AGAINST BEARINGS

USE ANTI-SEIZE COMPOUND ON ALL DURAL ADJUSTMENT NUTS & COVER SCREWS

						28L1001	1	1
						28L1000	1	1
						28L1012-2	1	1
						28L1006-3	1	1
						28L032-4	1	1
						28L032-3	1	1
						28L032-2	2	2
						28L1011	1	1
						28L042	1	
						28L1059	2	2
						28L1058	1	1
						28L042-1		1
(T) (U)	AC995-32-12	1	1			28L1013	1	1
						28L1012-3	1	1
						28L105	1	1
-1	PBY-4	28L006		AC500A-6-4	2	2	28L040-3	1
	PBY-4	28L006		ANTI-SEIZE COMPOUND			28L040-2	1
-1	PBY-3	28L006		LUBRICANT			28L039	1
	PBY-3	28L006		AN935-8	4	4	28L038	1
-1	PBY-2	28L006						
	PBY-2	28L006						
-1	PBY-1	28L006		AC945-4	2	2	28L036	1
	PBY-1	28L006		AN320-4	2	2		
-1	XP3Y-1	28L006		AN380-2-2	4	4	28L033-1	1
	XP3Y-1	28L006		AN502-8-5	4	4	28L033	1
					LH	RH	PART NO.	LH RH
					REQ'D PARTS		REQ'D	

R	28-5AMN	28L006	1
L	28-5AMN		1
R	28-5MN		1
L	28-5MN		1
R	28-5AMC		1
L	28-5AMC		1
R	28-5MC		1
L	28-5MC		1
R	28-5MG		1
L	28-5MG		1
R	28-5MA		1
L	28-5MA		1
R	PBY-5B		1
L	PBY-5B		1
R	PBY-5A		1
L	PBY-5A		1
R	PBY-5		1
L	PBY-5	28L006	1
OR	MOBIL GREASE #2	LIGHT ARMY	REQ'D

REQ'D PER A/C | PART NO. | NOMENCLATURE

REPLACES
MEDIUM FOR
DIMENSIONS UNLESS
OTHERWISE SPECIFIED

APPROVED 4-22-37 DATE
2 30 AAA
SCALE 12"-1'0"
NAVY NOTED
MATERIAL

CONSOLIDATED AIRCRAFT CORP. BUFFALO, N.Y.

O.M.	MODEL	NEXT ASSY	REQ	ST'D PARTS	REQ'D
	REQUIREMENTS PER AIRPLANE		MAT		PARTS LIST PER ASST
	NONE		TOUGH OIL		4-10-37 Funk H P
	SPEC	HEAT TREAT	FINISH		DRAFT PIECE ITEM ENG

NAME GEAR BOX ASSEM-FLOAT CONTROL - OUTER REAR

STAMP PT. NO. WHERE SHOWN

ORD. HAND 28L032-1

DWG D 28L032

SUPPLIES & EQUIPMENT CLASSIFICATION			
LET	ALTERATION	DATE	BY
M	TRACED - UP TO DATE	4-21-37	AC.M.
N	ADD DRILL & TAP NOTE	6-4-37	MCL.SON
	REMOVED DRILL NOTE		
P	REMOVED DIM. 1 3/32 & 11°45'	6-11-37	Ashton
R	ADDED DIM. 1 3/32 & 11°47'	7-16-37	Ashton
S	ADDED 2 3/16 DRAIN HOLES & E.O. A27753		
	DIMS 3/8, 3/16 & 7/16 NO W.T. CHG.	3-25-42	BRADLEY

#8-36 NF-3 THD
#29 (.136) TAP DRILL
4 HOLES

DRILL 3/16
2 HOLES

DRILL AND TAP
FOR #6-32
THRU TOPSIDE ONLY

BREAK EDGE

MACHINING NOT
NECESSARY IF FACE
CAST SMOOTH.

1 1/2-18 U.S.F. THD
BORE 1.439 ± .002
P.D. 1.464 +.003 -.000

SECTION B-B

PATTERN DIM.

MACHINE OFF FOR
L.H. PART

BREAK EDGE

1.750 +.001 -.000
CONCENTRIC WITH

1 1/4-18 U.S.F. THD.
BORE 1.189 ± .002
P.D. 1.214 ± .002

SECTION A-A

DRILL 3/16
6 HOLES
7/16 DIA. SPOTFACE
WHERE NECESSARY
(THESE HOLES TO MATCH
WITH HOLES ON 28L034
CONSIDERING LEFT AND
RIGHT HAND PART)

ONE PATTERN FOR L.H. & R.H.
PART AS SHOWN

GP GREEN PRIME FINISH CODE

Z	[redacted]
P	
XP	
C	

FILE FLAT 1/32 BELOW ROUND
CONTOUR AS SHOWN
BOTH SIDES

L R	28-5MA,MC	28L032	1 EA.				
L R	PBY-5 5A,5B	28L032	1 EA.				
-1	PBY-3A	28L032-1					
	PBY-3A	28L032					
-1	PBY-2	28L032-1					
	PBY-2	28L032					
-1	PBY-1	28L032-1					
	PBY-1	28L032					
-1	XPBY-1	28L032-1	1				
	XPBY-1	28L032	1				

O.H.	MODEL	NEXT ASSY.	REQ.	ST'D PARTS	LH REQ.	RH REQ.	PART NO.	LH REQ.	RH REQ.

REQUIREMENTS PER AIRPLANE — PARTS LIST PER ASSY.

MAT.				Z-P	4-12-34	Thumb	
				2 GP OUTSIDE	5-3-37	WM	✓
SPEC.		HEAT TREAT		FINISH	DRAFT	CHECK	EXAM.	ENG.

L R	28-5MC,MN	28L032	1 EA.	
L R	28-5ME,MN	28L032	1 EA.	

REPLACES
REPLACED BY CAST ± 1/32
LIMIT ON DIMENSIONS UNLESS OTHERWISE SPECIFIED MACH ± .010
APPROVED 4-21-37 DATE
1.13 CALC.WT. KRG ACT.WT.
SCALE 12" = 1'-0"
ALCOA M. 195T4
NAVY AL. ALLOY C3T6 AN AL CLA
MATERIAL SPEC. HEAT TREAT
CONSOLIDATED AIRCRAFT CORP. - BUFFALO, N.Y.
STAMP PT. No. WHERE SHOWN

NAME BOX - FLOAT - CONTROL OUTER REAR GEAR
OPP. HAND 28L033-1
DWG. SIZE D
28L033

SUPPLIES & EQUIPMENT CLASSIFICATION			
LET	ALTERATION	DATE	BY
G	TRACED	4-22-37	B.K.N.
H	REMOVED #50(.070) DRILL HOLES AND NOTES. ADDED DRILL & TAP HOLE	6-3-37	
I	1.1250 DIM. WAS 1.1266 1.3780 DIM. WAS 1.3785 -.001 +.000 WAS +.001 -.000	6-5-37	
J	DRWG. REVISED SHOWING L.H. ONLY	2-1-38	G.P.
K	REMOVED CHANGE J.	3-11-38	
L	REMOVED 1 13/32 O.D. FOR MACH-ING OF BOSS.- BOSS IS FACED ONLY REMOVED NOTE ALLOWING 1/16 ECCENTRICITY OF BOSSES	6-21-38	

CO9516

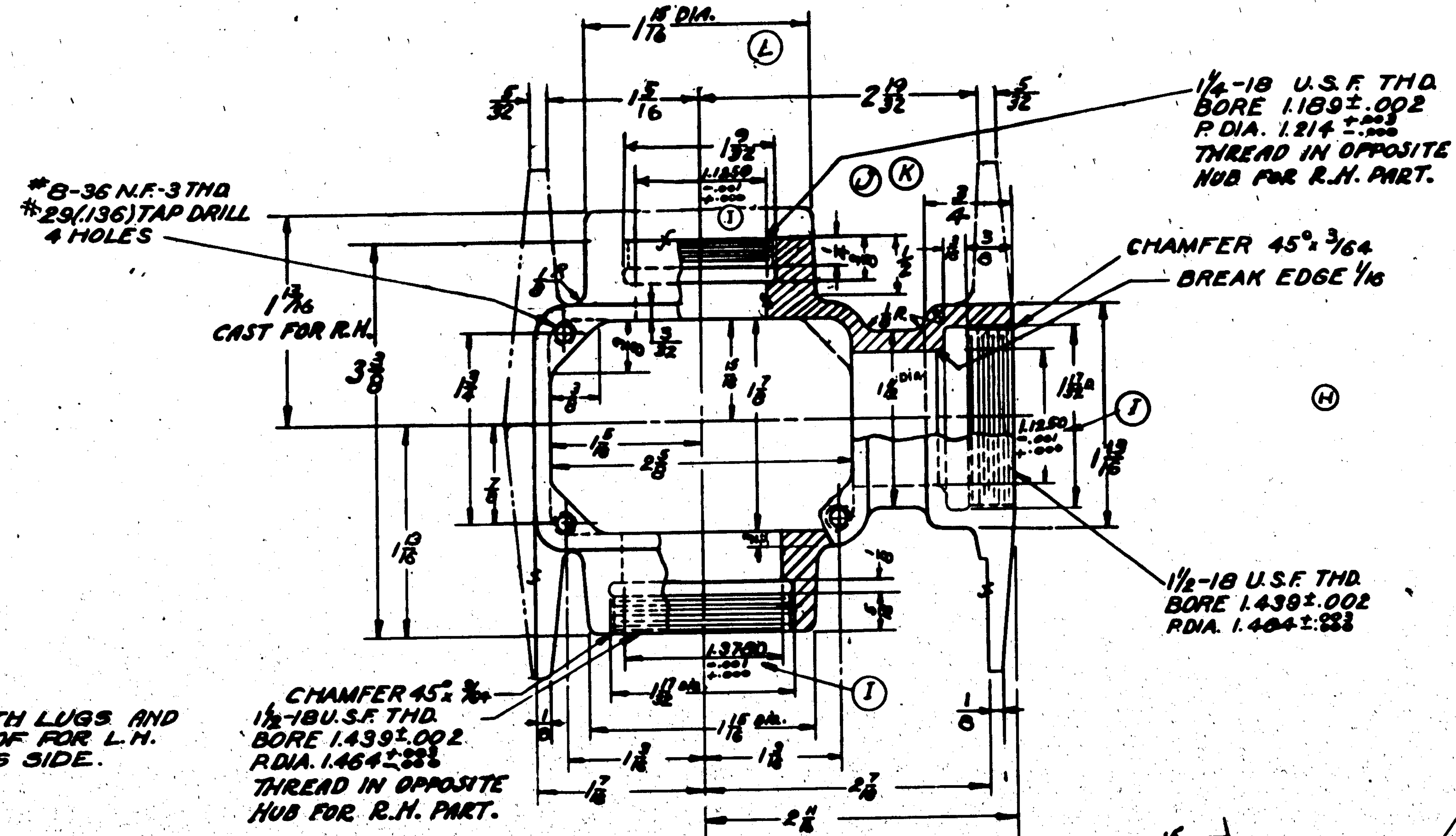

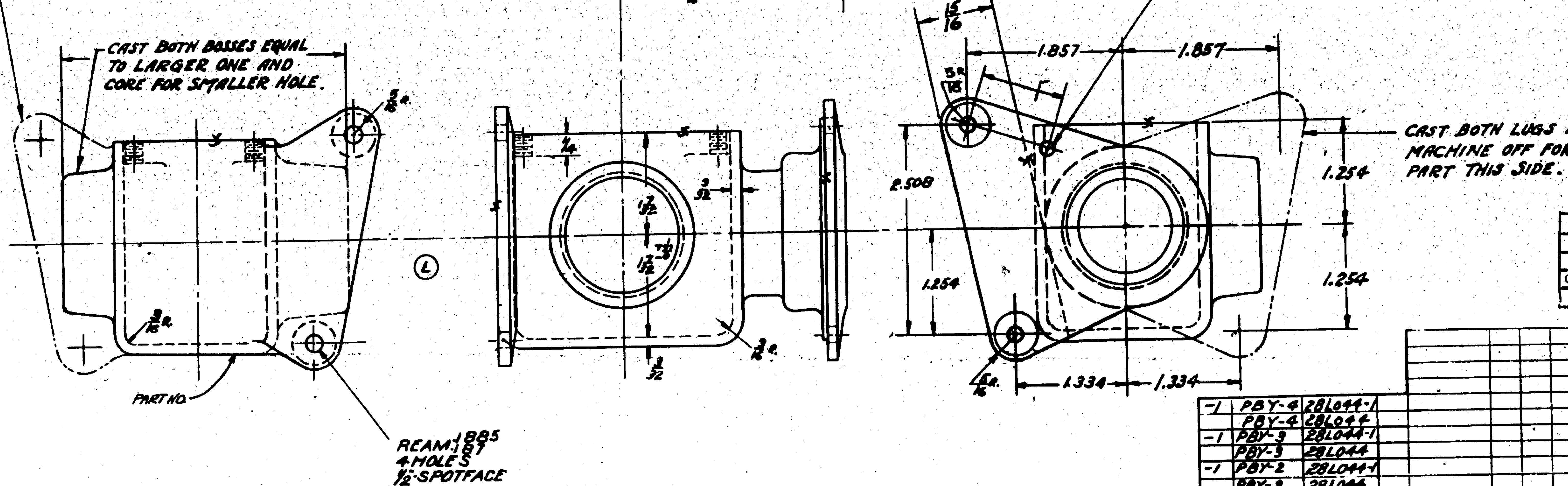

NOTE :-

ONE PATTERN MAY BE USED FOR L.H. & R.H. PARTS IF ALL LUGS ARE CAST ON AS SHOWN AND MACHINED OFF WHERE NOT REQUIRED.

FINISH CODE	
Z	ANODIC TREATMENT
P	P-27 PRIMER
GP	GREEN PRIMER
C	CADMIUM PLATE

O.H.	MODEL	NEXT ASSY.	REQ.
-1	PBY-4	28L044-1	
	PBY-4	28L044	
-1	PBY-3	28L044-1	
	PBY-3	28L044	
-1	PBY-2	28L044-1	
	PBY-2	28L044	
-1	PBY-1	28L044-1	
	PBY-1	28L044	
	XP3Y-1	28L050	
-1	XP3Y-1	28L044-1	
	XP3Y-1	28L044	
L-R	PBY-5A&B	28L044	1EA

REQUIREMENTS PER AIRPLANE — ST'D PARTS — LH RH REQ. — PART NO. — LH RH REQ. — MAT. — PARTS LIST PER ASSY:

REPLACES

REPLACED BY

LIMIT ON DIMENSIONS UNLESS OTHERWISE SPECIFIED + 1/32 CAST. - .010 MACH.

[redacted]

APPROVED: ZCW 4-22-37 DATE

CALC. WT. .70 ACT. WT.

SCALE 12"=1'-0"

ALCOA 195-T4

NAVY AL ALLOY CS76 — SPEC. 46AL.CL.4 — HEAT TREAT 29,000#/□" — FINISH Z-P-ZGP Outside

MATERIAL

DRAFT W.M. 4-8-34 — CHECK 5-8-37 — EXAM. Miller — ENG.

CONSOLIDATED AIRCRAFT CORP. BUFFALO, N.Y.

STAMP PT. No. WHERE SHOWN

NAME: BOX-FLOAT-CONTROL-OUTER FRONT-GEAR

OPP. HAND 28L045-1

DWG. SIZE D 28L045

R

28L045

SUPPLIES & EQUIPMENT CLASSIFICATION			
LET	ALTERATION	DATE	BY
H	TRACED UP TO DATE	9-22-37	L.M.C.
J	REMOVED ONE #50 DRILL	6-3-37	
	HOLES RELOCATED TWO		
	#30 HOLES ADDED DRILLED		
	AND TAP HOLE		
K	CHGD DIAM. 1.1250 ± .001 WAS		
	1.1250 +.000 −.001. FINISH	2-16-38	
	Z-P-2GP WAS Z-P-2 AL.		
	NO WT. CHG.		
L	IN B/M, REPLACED "ALCOA 195T4		
	AL. ALLOY CSTG. "SPEC." 46 AL-CL4		
	& H.T. "29,000 #/□" WITH "NOTED."		
	ADDED MAT'L NOTES #1 & 2.		
	NO WT. CHG.	7-18-45	

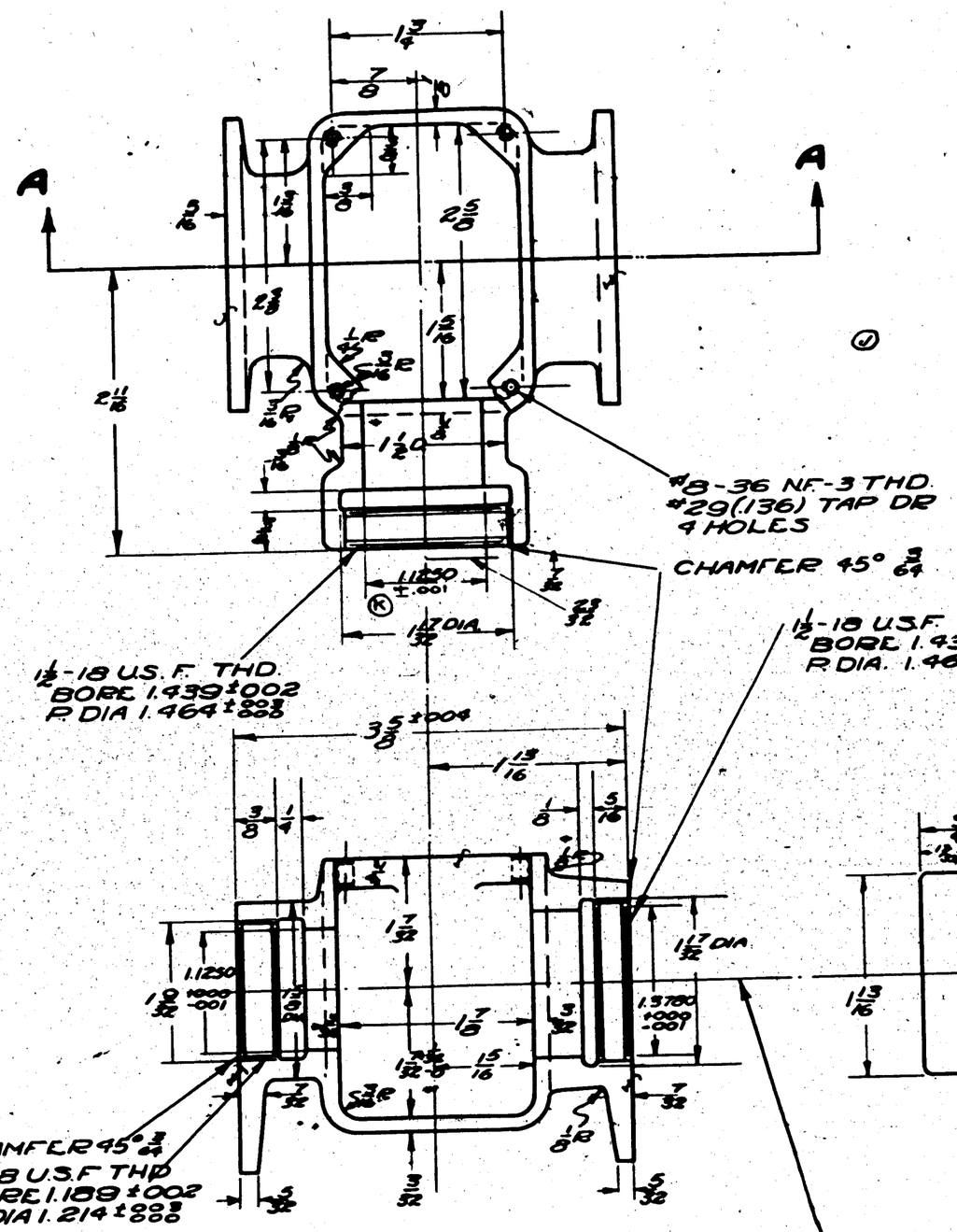

SECTION A~A

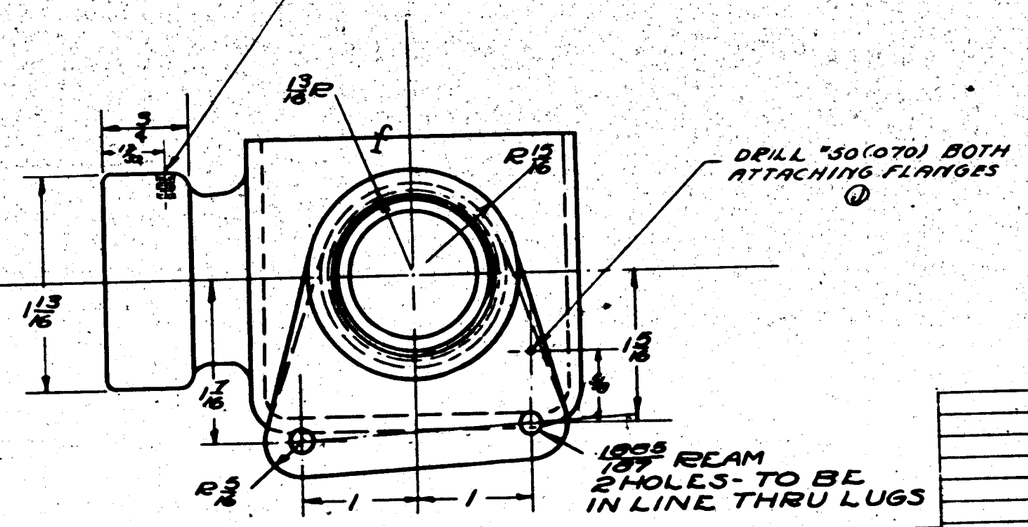
1/2-18 U.S.F. THD
BORE 1.439 +.002
R DIA. 1.464 +.003 -.000
DRILL #33 (.110)
TAP #6-32 1/4 DEEP
DRILL #30 (.070) BOTH ATTACHING FLANGES
1.9995 +.000 -.001 REAM 2 HOLES - TO BE IN LINE THRU LUGS

MATERIAL NOTES-

(L)
1.- 195T4 AL. AL. CASTING, SPEC. AN-QQ-A-390 CL. I., T.S. 29,000 P.S.I., OR
2.- S195T6 AL AL. CASTING, SPEC. AN-A-5 CL. II., T.S. 32,000 P.S.I.

28-S's	28L049	EA.	
PBY-5A	28L049	1	
PBY-5B	28L049	1	
PBY-5	28L049	1	
PBY-4	28L049		
PBY-3	28L049		
PBY-2	28L049		
PBY-1	28L049		
XPBY-1	28L049		

O.H.	MODEL	NEXT ASSY.	REQ.	STD PARTS	LH REQ.	RH REQ.	PART NO.	LH REQ.	RH REQ.
REQUIREMENTS PER AIRPLANE				MAT.	PARTS LIST PER ASSY.				
				Z-P-2GP					
NOTED	NOTED			OUTSIDE ONLY	WM	SFS	ROLLED		
SPEC.	HEAT TREAT			FINISH	DRAFT	CHECK	EXAM.	ENG.	

REPLACES

REPLACED BY

LIMIT ON DIMENSIONS UNLESS OTHERWISE SPECIFIED ±

APPROVED 4-22-37 DATE

CALC. WT. ACT. WT.

SCALE

NAVY NOTED MATERIAL

CONSOLIDATED AIRCRAFT CORP. BUFFALO, N.Y.

STAMP PT. No. WHERE SHOWN

NAME BOX-FLOAT-CONTROL-CENTER UPPER GEAR

OPP. HAND

SIZE D

28 L 050

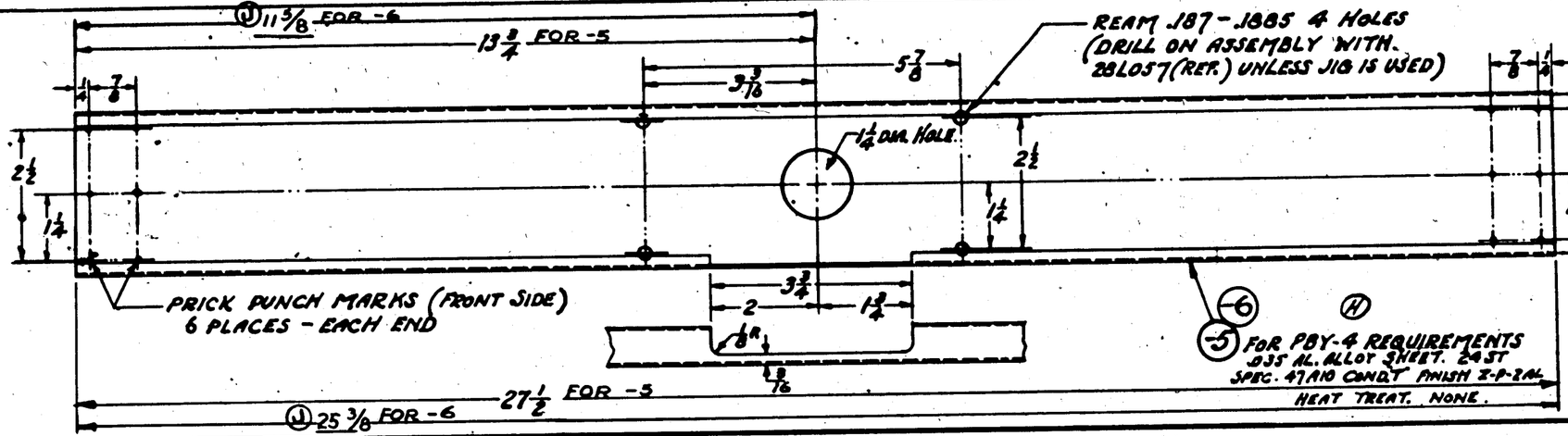
(J) 11 3/8 FOR -6
13 3/4 FOR -5
REAM .187 - .1885 4 HOLES (DRILL ON ASSEMBLY WITH 28L057 (REF.) UNLESS JIG IS USED)
INSIDE DIM.
1 1/4 DIA. HOLE
PRICK PUNCH MARKS (FRONT SIDE) 6 PLACES - EACH END
(-6) (H)
(-5) FOR PBY-4 REQUIREMENTS .035 AL. ALLOY SHEET. 24ST SPEC. 47A10 COND'T FINISH 2-P-2AL HEAT TREAT. NONE.
27 1/2 FOR -5
(J) 25 3/8 FOR -6

SUPPLIES & EQUIPMENT CLASSIFICATION			
LET	ALTERATION	DATE	BY
F	TRACED	4-22-37	[illegible]
G	PBY-4 REQUIREMENTS ADDED	8-8-38	[illegible]
H	ADDED PART 28L089-5	8-2-38	[illegible]
J	ADDED -6 TO FACE & B/M. ADDED DIMS. 25 3/8 & 11 3/8 FOR -6 ONLY. WT. CHG. NEG.	4-4-42	EDWARDS
K	IN BRKT'S/AIR BLOCK ADDED -6 (NA. 28L1047) FOR PBY-5A C.NOs(S) 4G4 9514 & 00. & LIMITED -5 TO C.8847G C-70496, C-77713 (PBY-5A) T, CHG. NEG. 9-19-42		

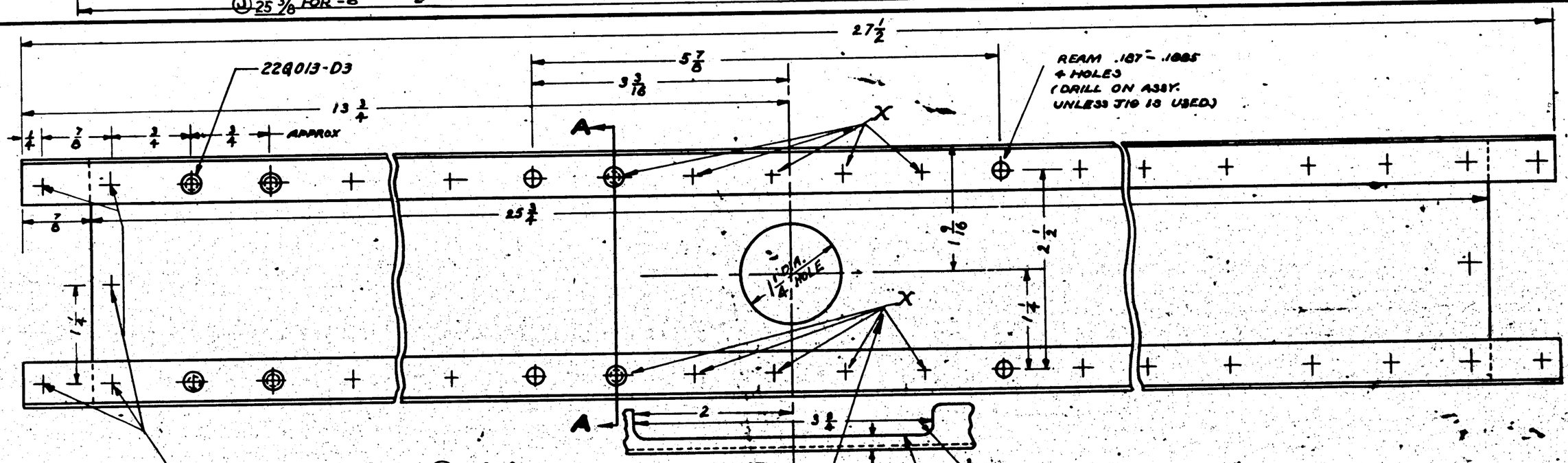

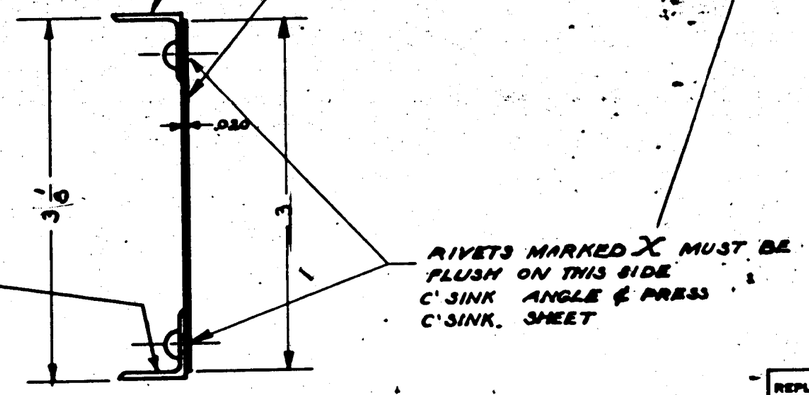
(-4) 1/2 X 1/2 X .040 - ALCOA DIE K6240 - 24ST AL.AL. EXTRUDED - SPEC. 4CA9 COND. T
(-3) ALUM. ALLOY SHEET 24ST 47A10 CONDITION T.
.020
3 1/16
3
(-2) 1/2 X 1/2 X .040 - DIE # K6240 24ST. AL. ALLOY EXTR SPEC.
RIVETS MARKED X MUST BE FLUSH ON THIS SIDE C'SINK ANGLE & PRESS C'SINK. SHEET

SECTION AA

C.NOs (S) 4G4 ALL C.70496, C.77713 (C.8847) ONLY
C.91876
C° 70496
MAKE FUTURE SPARES FROM -5.

-5	28-5'S	28L1047	1						28L089-6	1	
-5	PBY-5A	28L1047	1		FOR PBY-4				28L089-5	1	
-5	PBY-5A		1								
-5	PBY-5B		1								
-6	PBY-5		1						22Q013-D3		
-5	PBY-4		1		FOR PBY-1					1	
	PBY2		1		PBY-2 & PBY-3				28L089-4	1	
	PBY2		1						-3	1	
	PBY-1		1						-2	1	
	XPBY-1	28L1047	1								

O.H.	MODEL	NEXT ASSY.	REQ.	ST'D PARTS	LH REQ.	RH REQ.	PART NO.	LH REQ.	RH REQ.

REQUIREMENTS PER AIRPLANE — MAT. — PARTS LIST PER ASSY.

NAVY NOTED	NOTED	NOTED	BP-[illegible] GP	4-17-39	Chunky	KMP	
MATERIAL	SPEC.	HEAT TREAT	FINISH	DRAFT	CHECK	EXAM.	ENG.

REPLACES
REPLACED BY
LIMIT ON DIMENSIONS UNLESS OTHERWISE SPECIFIED ± 1/64
APPROVED [illegible] 1-16-36 DATE
CALC. WT. [illegible] ACT. WT.
SCALE 12" = 1'-0" [illegible]
AC-

CONSOLIDATED AIRCRAFT CORP. BUFFALO, N. Y.
STAMP PT. No. WHERE SHOWN

SUPPORT — FLOAT — CONTROL LOWER CENTER GEAR BOX & MOTOR

OPP. HAND
SIZE D
28L089

LET	ALTERATION	DATE	BY
E	REVISED & REDRAWN. -5 WAS -3. REMVD DIMS. 1 1/16, 1/2, 1 3/32, 5/16 & 3/4, ADDED DIMS. 3/8, 1 5/8, 1 3/16, 2 3/4, .800 +.003 -.000 & VAR. ADDED NOTES: "DRILL 1/16 --- ON REAMER" & "DRILL --- DEEP". ADDED: 28L082, 28L083, AN960-D10, AN320-3, AN-380-B2-2. (2 EA.) WT. CHG. NEG.	9/25/44	CLARK
F	CHG'D. POSITION DIM. .800 +.003 -.000 TO SHOW DIA. OF PLUG; WAS INSIDE DIA. -2. REMVD. "AFTER WELDING" FROM NOTE 2. IN B/M -6 STOCK LENGTH 2 1/4 WAS 1 5/8. NO WT. CHG.	10-22-45	CARTER

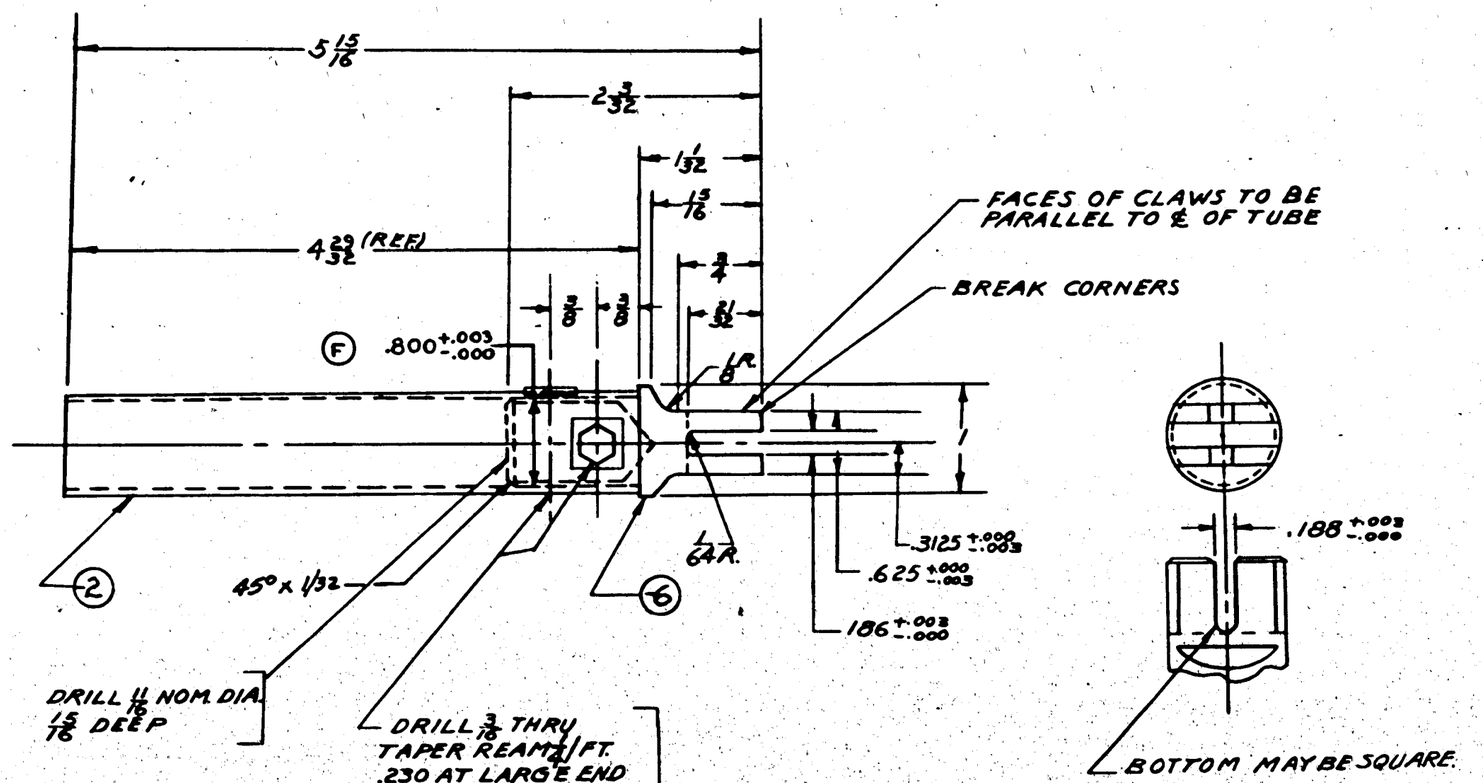

NOTES:

1. ALTERNATE MATERIALS:
   (A) CH. MOLY WELDED TUBING AN-T-3, TYPE I. COND N.
   (F) (B) CH. MOLY SEAMLESS TUBING ANWW T850 COND. N.
2. BEFORE MACHINING. NAFSH 276-3 (150,000)
3. FILL INSIDE OF TUBE WITH G.P.B. DRAIN, OUTSIDE ONE COAT, EXCEPT MACHINE END.

ASSY. DASH NO.	MODEL	NEXT ASSY.	REQ.
	28-3AMM	28L107	1
	28-5AMC		1
	28-5MM		1
	28-3MB		1
	28-5MC		1
	28-3MA		1
	PBY-5B		1
	PBY-5A		1
	PBY-3		1
	PBY-2-A		
	PBY-1-3		
	XP3Y-1	28L107	1

REQUIREMENTS PER AIRPLANE

REPLACES	CALC. WT.
28L091 OF 12-4-36	
REPLACED BY	ASS'Y. WT.

UNLESS OTHERWISE SPECIFIED DIMENSIONS ARE	SCALE
± .010	12"=1'-0"

STAMP PART NUMBER WHERE SHOWN

PART No.	STOCK	MATERIAL	SPEC.	LH REQ.	RH REQ.	LH REQ.	RH REQ.	LH REQ.	RH REQ.	LH REQ.	RH REQ.	LH REQ.	RH REQ.
				-0		-2		-3		-4		-5	
28L093					2								
28L082					2								
AN380-B2-2					2								
AN960-D10					2								
AN320-3					2								
-6	1 DIA. X 2 3/4	CH. MOLY TUBE	4130 X 3	1									
-2	7/8 X .035 X 5 1/4	CH. MOLY TUBE	4130 X 3	1									

PARTS LIST PER ASSY.

AC NOTED	NOTED	9/1/44	U.S.				M.P.	L
NAVY		MAR-DOLPH 12/1/44						
HEAT TREAT	FINISH	DRAFT	CHECK	STRUCT.	MAT	APPROV.	ENG.	

NAME COUPLING FLOAT-CONTROL TORQUE TUBE

OPP. HAND

CONSOLIDATED VULTEE AIRCRAFT CORP. SAN DIEGO DIVISION . . . SAN DIEGO, CALIF.

SIZE D

28L091

R

160782

INCORPORATES
XPBY-1 BU. AERO. CNG. # 23
PBY-1 " " " # 126
PBY-2 " " " # 84
PBY-3 " " " # 62
PBY-4 " " " # 23

E.O. 10691

SUPPLIES & EQUIPMENT CLASSIFICATION			
LET	ALTERATION	DATE	BY
F.	TRACED	4-12-37	H.W.
G	RELOCATED ALL SLEEVES 3/32 OUTBOARD FROM OLD LOCATIONS	5-3-37	[illegible]
H.	CHANGED DIM. 1 1/2 TO 1 3/32. CHANGED B.M. AN380-2-5 TO AN380-2-5.	5-18-37	[illegible]
J	ADDED -4 REINF. TUBE & DETAIL A SHOWING INSTALL.	8-17-39	FOA
K	*SWAGE TO .920 +.000 -.010 O.D. TO FIT INSIDE OF -2 1/2-3 (REF.) WAS *SWAGE TO FIT INSIDE DIA. OF -2 1/2-3 (REF.). WT. CHG. NEG.	8-21-42	CHANGE MAN

AN23-21 BOLT
AN320-3 NUT
AN380-B2-2 COTTER

28L082 BOLT
28L083 WASHER
AN320-3 NUT
AN380B2-2 COTTER

DRILL 3/16 THRU
TAPER REAM - 1/4 PER FT. TO .230
AT LARGE END. USE STOP
ON REAMER. 2 PLACES.

DO NOT PAINT

28L098 COUPLING.

(-2) 1X.035 AL. ALLOY TUBE -17ST COND.T, SPEC. 44T21 OR -24ST. COND.T, SPEC 44T28
(-3) FINISH. Z-INSIDE-[illegible]; OUTSIDE-P-[illegible] GP
-247 3/16 (20'-9 3/16") FINISHED
-248 3/16 (20'-10 1/16") LENGTHS

FINISH: ANODIZE, GREEN PRIMER INSIDE
P27 PRIMER, GREEN PRIMER OUTSIDE

SQUARE TUBE END

SEE DETAIL A FOR -4 REINF. (REF.)

2 1/4 REF.
1 REF.
1 3/32 REF.
3/32 REF.

*50 (.070) DRILL - TWO HOLES IN TUBE FROM OPPOSITE SIDES.

L.H.

1 1/2

SQUARE END

28L097 SLEEVE

AN380-2-5

5 11/32 +.00 -1/32
26 13/32 +.00 -3/32
52 13/32 +.00 -3/32
75 23/32 +.00 -3/32
96 7/32 +.00 -1/32
117 5/32 +.00 -1/32
140 13/16 +.00 -1/16
158 9/32 +.00 -1/32
170 5/32 +.00 -1/32
185 11/32 +.00 -1/16
198 13/32 +.00 -1/32
225 15/32 +.00 -1/32

PAINT LARGE BLACK LETTERS AS SHOWN. R.H. FOR 28L095-1

(G)

LENGTH = 250 1/2 ± 1/32 (20'-10 1/2") FOR 28L095 L.H. (SEE PAINT NOTE)
LENGTH = 249 15/16 ± 1/32 (20'-9 15/16") FOR 28L095-1 R.H.

GENERAL NOTE: PREVENT DAMAGING AND BENDING OF TUBE ASS'Y. WHEN HANDLING OR PLACING IN STORAGE.

LOCATE SLEEVE & COTTER-HOLES, AS DIMENSIONED. SLIDE SLEEVE ASIDE, AND PAINT TUBE -AL. REPLACE SLEEVE, WHILE PAINT IS WET, & COTTER. PROTECT SLEEVE WHEN COMPLETING FINISH OF TUBE.

(-4) 1" X .035 AL. ALLOY TUBE
SAME SPEC. AS -2 1/2-3 (REF)
SWAGE TO .920 +.000 -.010 O.D. TO
FIT INSIDE OF -2 1/2-3 (REF.)

(K)

4 1/4
5/8 5/8 5/8 5/8 1 3/8
45°
5/8

AN 442-D4 RIVETS
6 REQ.
SPACE AS SHOWN.

DETAIL A
SHOWING INSTALL. OF -4 (REF) REINFORCING TUBE IN END OF -2 1/2-3 (REF)

O.H.	MODEL	NEXT ASSY.	REQ.	STD PARTS	REQUIRED LH	REQUIRED RH	PART NO.	PARTS LIST PER ASSY. LH	PARTS LIST PER ASSY. RH
-R	28-5MM[illegible]	28L006	1						
-L	28-5MM[illegible]	28L006	1						
-R	PBY-5B	28L006	1						
-L	PBY-5B	28L006	1						
-R	28-5MM[illegible]	28L006	1						
-L	28-5MM[illegible]	28L006	1						
-R	28-5AMC[illegible]	28L006	1						
-L	28-5AMC[illegible]	28L006	1						
-R	PBY-5[illegible]5A	28L006	1						
-L	PBY-5[illegible]5A	28L006	1				28L098	1	1
-1	PBY-3-4	28L005					28L097	12	12
	PBY-3-4	28L005					28L083	2	2
-1	PBY-1-2	28L006		AN380B2-2	3	3	28L082	2	2
	PBY-1-2	28L006		AN380-2-5	12	12	28L095-4	1	1
-1	PBY-1	28L006		AN320-3	3	3	28L095-3	-	1
	XPBY-1	28L006		AN23-21	1	1	28L095-2	1	-

REPLACES 28L095 OF 5-1-54
REPLACED BY
LIMIT ON DIMENSIONS UNLESS OTHERWISE SPECIFIED ± NOTED
APP[illegible] 4-12-37 DATE
J.21 CALC.WT. ACT.WT.
SCALE 12"=1'-0"
AC
NAVY NOTED
MATERIAL
NOTED SPEC. | NOTED HEAT TREAT | NOTED FINISH
REQUIREMENTS PER AIRPLANE | MAT. [illegible] | PARTS LIST PER ASSY.
DRAFT | CHECK | EXAM. | ENG.
CONSOLIDATED AIRCRAFT CORP. BUFFALO, N.Y.
STAMP PT. No. WHERE SHOWN
NAME TUBE ASS'Y.-FLOAT-CONTROL WING-CENTER SECT. TORQUE
OPP. HAND 28L095-1
SIZE D
DWG. 28L095

SUPPLIES & EQUIPMENT CLASSIFICATION			
LET	ALTERATION	DATE	BY
F	TRACED UP TO DATE	8-7-57	D4JN

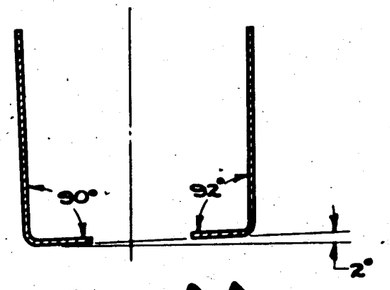

SECTION A-A

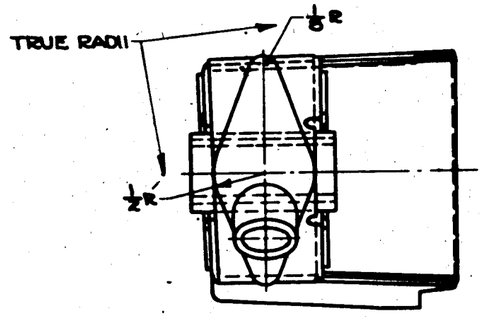

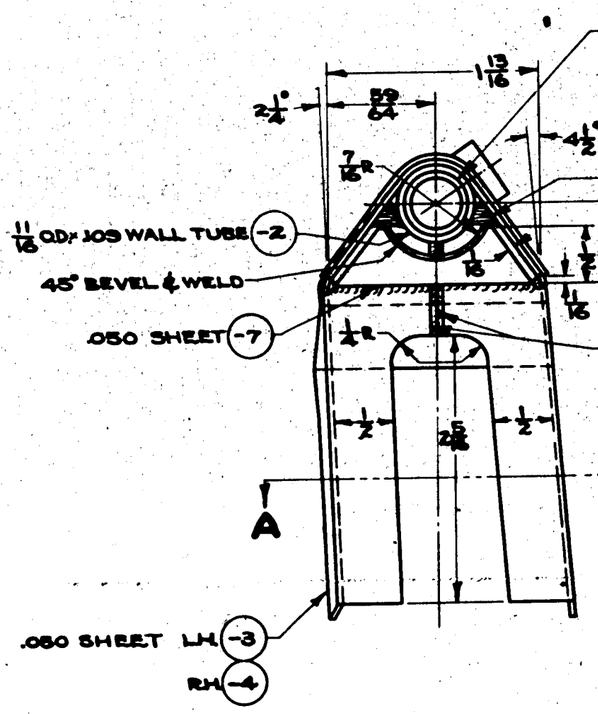

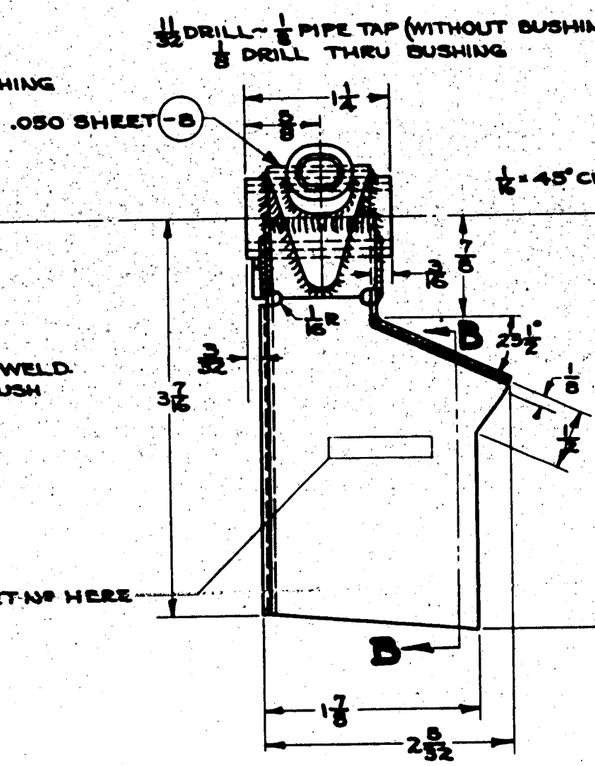

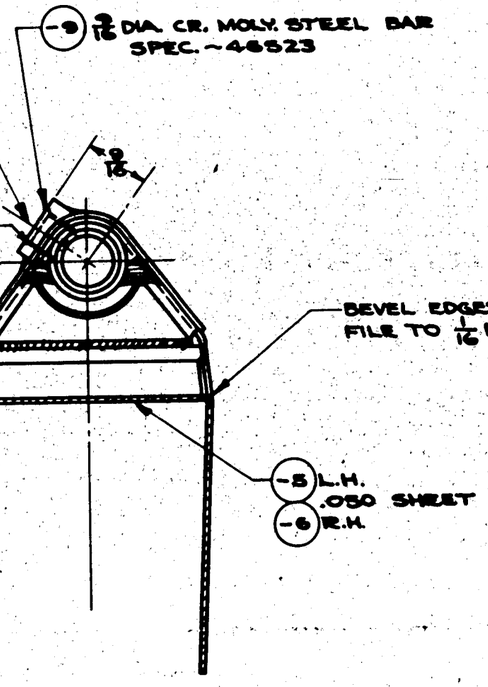

SECTION B-B

SB-SAND BLAST FINISH CODE

[redacted]

NOTE:~
ALL SHEET CHR. MOLY. STEEL - SPEC. - 47514a.
ALL TUBING CHR. MOLY. STEEL - SPEC. - 44T18a.
ALL BEND RADII 1/16.
WELD AS SHOWN. USE CHR. MOLY. STEEL WELDING ROD.
CLOSE CORNER HOLES WITH WELD

O.H.	MODEL	NEXT ASSY.	REQ.	ST'D PARTS	LH REQ.	RH REQ.	PART NO.	LH REQ.	RH REQ.
							9618-14-40	1	1
-9	PBY-SAME	28L113	2EA.						
-2	PBY-SAME	28L113	2EA.						
-R	PBY-SAME	28L2000	1EA.				-3	1	1
-L	PBY-SAME	28L2000	1EA.				-8	1	1
-1	PBY-4	28L2000-R					-7	2	2
	PBY-4	28L2000-L					-6	1	1
-1	PBY-2-3	28L2000-R					-5	1	1
	PBY-2-3	28L2000					-4	1	1
-1	PBY-1	28L009-1					-3	1	1
	PBY-1	28L009					28L112-2	1	1

REPLACES	APPROVED [redacted] 8-7-57 DATE	REQUIREMENTS PER AIRPLANE	MAT.
REPLACED BY	.420 CALC. WT. ACT. WT.		PARTS LIST PER ASSY.
LIMIT ON DIMENSIONS UNLESS OTHERWISE SPECIFIED ± .010 ± 1/2°	SCALE 12" = 1'0"		S-15-24 H.M.P.
[redacted]	AC		RB 8-8-57
	NAVY NOTED	NOTED SAE 2715-1 (25,000 PSI) SB-C-P	DRAFT CHECK EXAM. ENG.
	MATERIAL	SPEC. HEAT TREAT FINISH	OPP. HAND 28L112-1
	CONSOLIDATED AIRCRAFT CORP. BUFFALO, N. Y.	NAME FITTING-FLOAT-BRACE UPPER FRONT	DWG. NO. D 28L112
	STAMP PT. No. WHERE SHOWN		

SUPPLIES & EQUIPMENT CLASSIFICATION			
LET	ALTERATION	DATE	BY
F	TRACED UP TO DATE	8-7-37	D-M-M

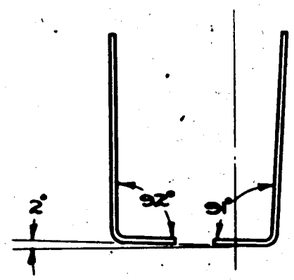

SECTION A-A

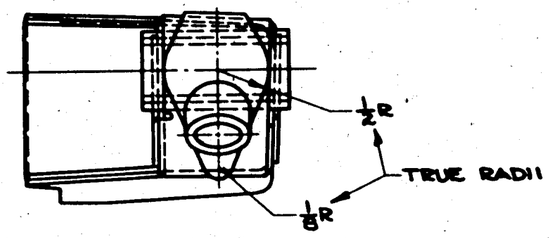

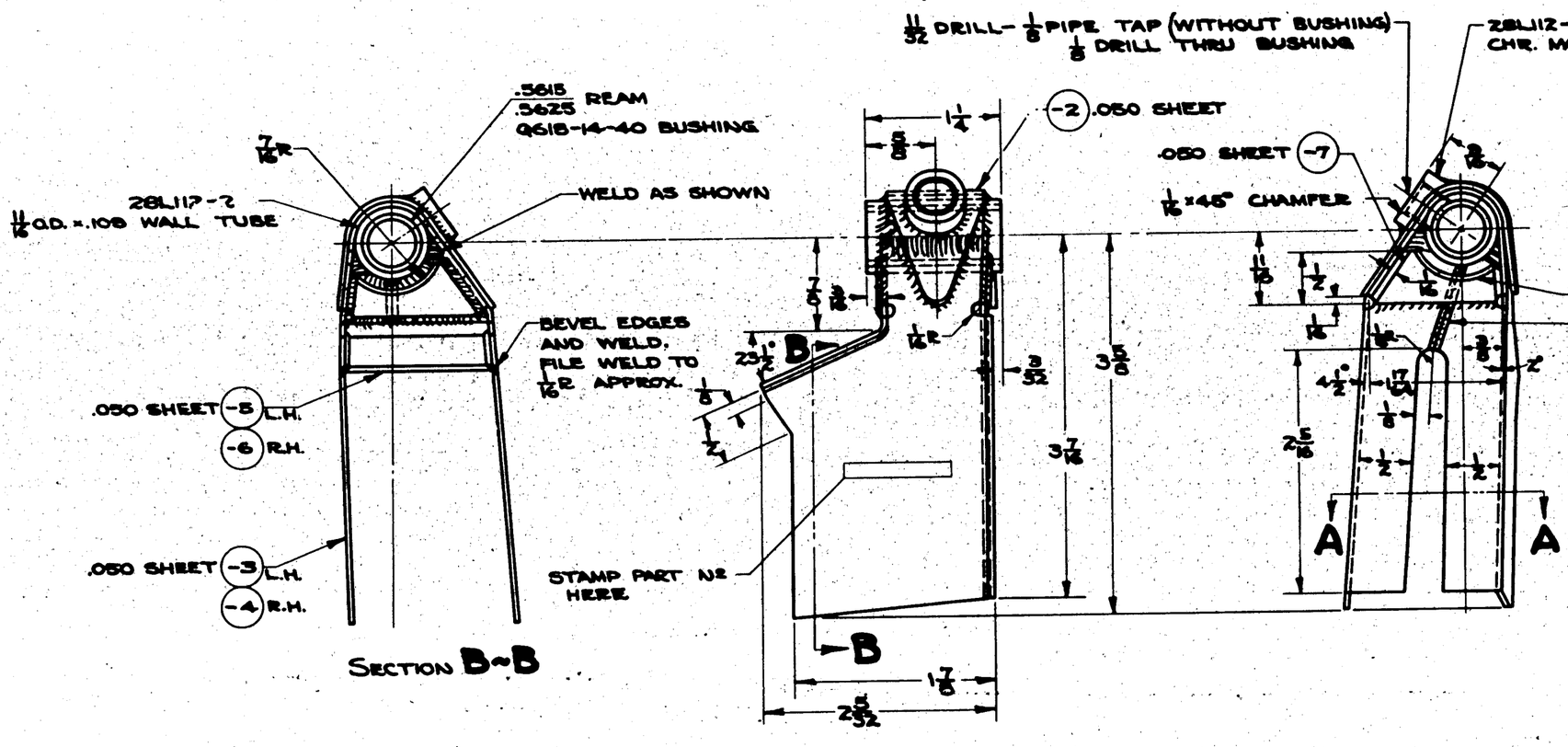

SECTION B-B

SB- SAND BLAST
GP- GREEN PRIME

FINISH CODE	
A	
B	
C	

NOTE:-

ALL SHEET CHR. MOLY. STEEL - SPEC. 47514 a.
ALL TUBING CHR. MOLY. STEEL - SPEC. 44718 a.
ALL BEND RADII 1/16.
WELD AS SHOWN - USE CHR. MOLY STEEL WELDING ROD.
CLOSE CORNER HOLES WITH WELD.

									Q618-14-40	1	1	
									28L112-9	1	1	
									28L112-2	1	1	
-R	PBY-5A/B	28L2000	1EA						-7	2	2	
-L	PBY-5A/B	28L2000	1EA						-6		1	
-1	PBY-3-4	28L2000-R							-5	1		
	PBY-3-4	28L2000							-4		1	
-1	PBY-1-2	28L0009-1							-3	1		
	PBY-1-2	28L0009							28L113-2	1	1	
O.H.	MODEL	NEXT ASSY.	REQ.	ST'D PARTS	LH REQ.	RH REQ.	PART NO.			LH REQ.	RH REQ.	

REQUIREMENTS PER AIRPLANE — MAT. — PARTS LIST PER ASSY.

REPLACES	APPROVED	DATE
REPLACED BY	CALC. WT. .40	ACT. WT.
LIMIT ON DIMENSIONS UNLESS OTHERWISE SPECIFIED ± .010 ± 1/2°	SCALE 12" = 1'0"	
[redacted]	AC	
	NAVY NOTED	
	MATERIAL	

NOTED	SAE 4130 (125,000 lbs)	SB-C-GP
SPEC.	HEAT TREAT	FINISH

DRAFT	CHECK	EXAM.	ENG.
R.B. 8-8-37			

CONSOLIDATED AIRCRAFT CORP. BUFFALO, N. Y.

STAMP PT. No. WHERE SHOWN

NAME FITTING-FLOAT-BRACE UPPER REAR

OPP. HAND 28L113-1

SIZE D — 28L113

LET	ALTERATION	DATE	BY
M	TRACED	8-16-43	PHILLIPS

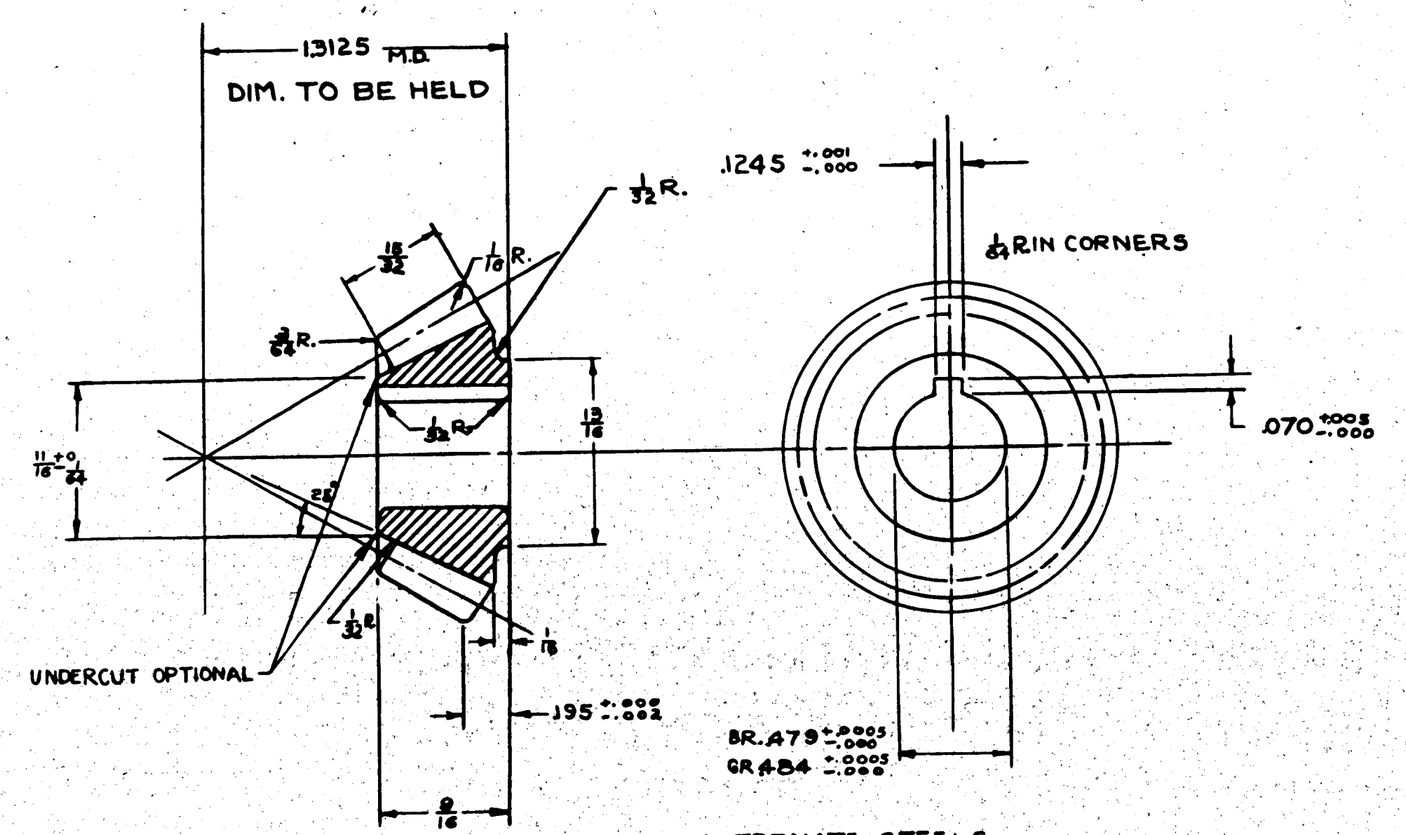

ALTERNATE STEELS
IN ORDER OF PREFERENCE
1. X4130 175,000 P.S.I.
2. 4037 175,000 P.S.I.
3. {NE 8739 OR / NE 8735} 175,000 P.S.I.
4. NE 8744 175,000 P.S.I.

SPIRAL ANGLE - 40°
PRESS ANGLE - 20°
PITCH ANGLE - 28°11'
FACE ANGLE - 35°17'
PITCH 12 D.P.
TEETH 15.
MATERIAL - NOTED
O.D. 1.433 +.003 -.003

NOTE:-
1. SERVICE NOTE: IF REPLACEMENT OF THIS PINION IS NECESSARY, THE CORRESPONDING GEAR 28L1001-REF. MUST ALSO BE REPLACED.
2. 12 DP. LONG & SHORT ADDENDUM, CURVED TOOTH - GLEASON SYS. 40° LEFT-HAND SPIRAL GEAR TO MESH WITH 28L1001 - 28 TEETH
3. SPEC. SAE 2535 OR 3245 OR 6141

M.C.R.* 189-1

ASSY. DASH NO.	MODEL	NEXT ASSY.	REQ'D
	PBY-5,5A&5B	28L057	1EA
	PBY-5,5A&5B	28L044	2EA
	PBY-5,5A&5B	28L049	1EA
	PBY-5,5A&5B	28L032	2EA
	PB2Y-3	29L3562	1
	ALL 28-5'S	28L044	2EA
	ALL 28-5'S	28L049	1EA
	ALL 28-5'S	28L057	1EA
	ALL 28-5'S	28L032	2EA
	PBY-1,2,3&4	28L057	
	PBY-1,2,3,&4	28L049	
	PBY-1,2,3&4	28L044	
	PBY-1,2,3&4	28L032	

REQUIREMENTS PER AIRPLANE

REPLACES 28L1000 OF 11-16-36 — CALC. WT.

REPLACED BY — ACT. WT.

SCALE 24" = 1'-0"

STAMP PART NUMBER WHERE SHOWN

PURCHASE TO DRAWING

PART No.	STOCK	MATERIAL	SPEC.	LH REQ.	RH REQ.	LH REQ.	RH REQ.	LH REQ.	RH REQ.	LH REQ.	RH REQ.	LH REQ.	RH REQ.
PARTS LIST PER ASSY.				-0		-2		-3		-4		-5	
-0	1 5/8 DIA. x 1 1/2	COMM STEEL	SEE NOTE 3										

AC 180,000-200,000 PSI	REMOVE HEAT TREAT SCALE	4-17-36	TJ			LC.W	R.
		12-1-36	PHILLIPS			11-16-36	
HEAT TREAT	FINISH	DRAFT	CHECK	STRUCT	MAT	APPROV	ENG.

NAME PINION - FLOAT - RETRACTING MECH.

OPP. HAND

CONSOLIDATED VULTEE AIRCRAFT CORP. SAN DIEGO DIVISION . . . SAN DIEGO, CALIF.

DWG. D SIZE 28L1000

R 000182

LET	ALTERATION	DATE	BY
L	TRACED	8-14-45	

SAME AS -0 EXCEPT FOR .080 DIM. (-7)

28L1001

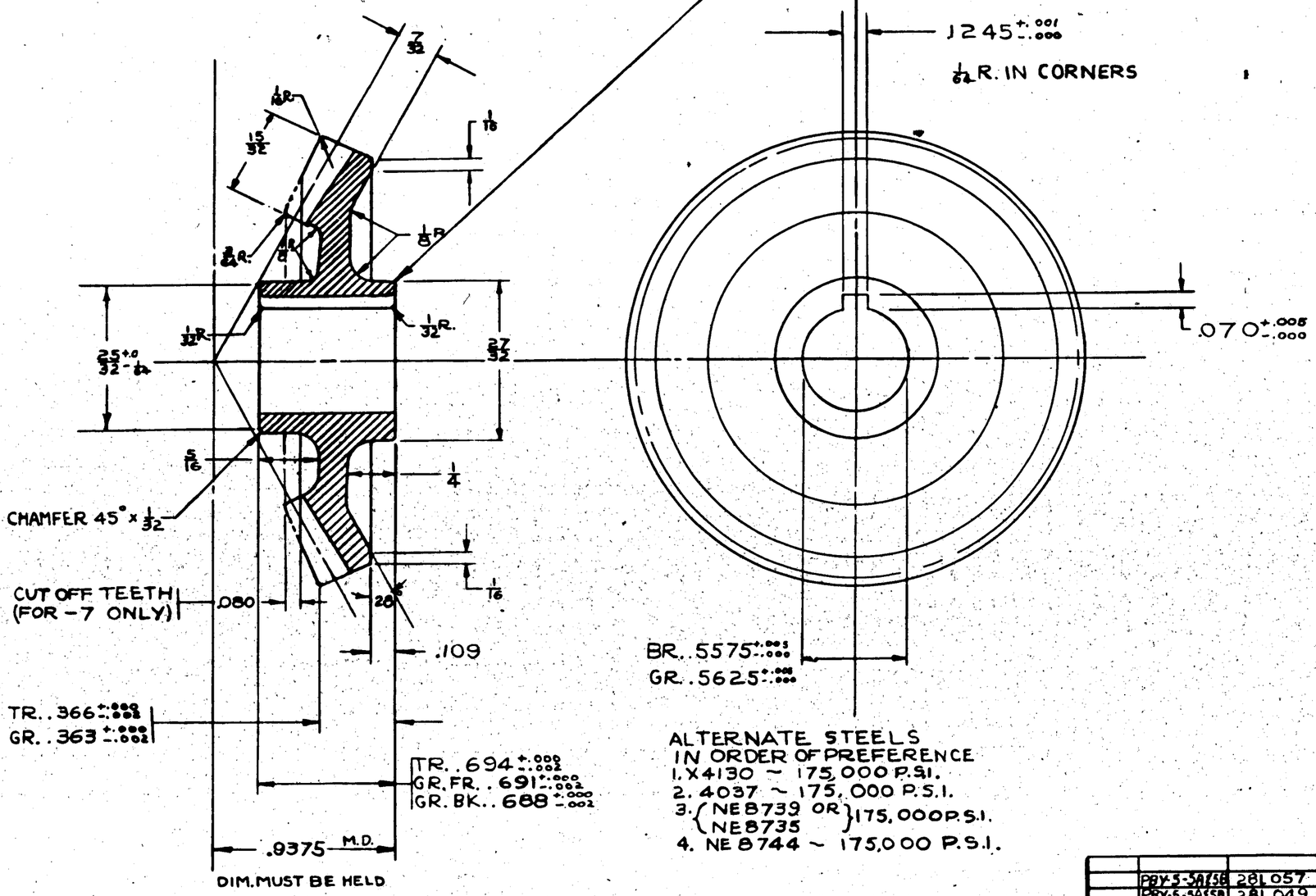

ALTERNATE STEELS
IN ORDER OF PREFERENCE
1. X4130 ~ 175,000 P.S.I.
2. 4037 ~ 175,000 P.S.I.
3. (NE8739 OR NE8735) 175,000 P.S.I.
4. NE 8744 ~ 175,000 P.S.I.

SPIRAL ANGLE - 40°	
PITCH ANGLE - 61°49'	
FACE ANGLE - 66°54'	
PRESS ANGLE - 20°	
TEETH - 28	
PITCH - 12 D.P.	
O.D. 2.387 +.003 -.003	
NOTE: MAX. O.D. AFTER TURNING .016 - 2.350	

NOTE:—

1. SERVICE NOTE: IF REPLACEMENT OF THIS GEAR IS NECESSARY, THE CORRESPONDING PINION 28L1000-REF. MUST ALSO BE REPLACED
2. 12 D.P. LONG & SHORT ADDENDUM. CURVED TOOTH - GLEASON SYS. 40° RIGHT HAND SPIRAL GEAR TO MESH WITH 28L1000 - 15 TEETH
3. SPEC. SAE 2535 OR 3245 OR 6141.

(#12 ONLY)

ASSY. BASH NO.	MODEL	NEXT ASSY.	REQ'D
	PBY-5-5A/5B	28L057	1 EA
	PBY-5-5A/5B	28L049	1 EA
	PBY-5-5A/5B	28L044	2 EA
	PBY-5-5M/5B	28L032	2 EA
-7	PB2Y-3	29L3562	1
	ALL 28-5'S	28L057	1 EA
	ALL 28-5'S	28L049	1 EA
	ALL 28-5'S	28L044	2 EA
	ALL 28-5'S	28L032	2 EA

REQUIREMENTS PER AIRPLANE

REPLACES 28L1001 OF 11-16-36 — .17 CALC. WT.

REPLACED BY — ACT. WT.

LIMIT ON DIMENSIONS WHERE NO TOLERANCE SPECIFIED: + . — SCALE 24" = 1'-0"

STAMP PART NUMBER WHERE SHOWN

PURCHASE TO DRAWING

PART NO.	STOCK	MATERIAL	SPEC.	LH REQ. -0	RH REQ. -2	LH REQ. -3	RH REQ. -4	LH REQ. -5	RH REQ.
-7	2 1/2 DIA. X 1 1/8	COMM. STEEL	SEE NOTE #3						
28L1001-6	2 1/2 DIA. X 1 1/8	COMM. STEEL	SEE NOTE #3						

PARTS LIST PER ASSY.

HEAT TREAT	FINISH	DRAFT	CHECK	STRUCT	MAT'	APPROV	ENG.
AC 160,000 - 200,000 P.S.I. NAVY	REMOVE HEAT TREAT SCALE	4-17-36					R
		PHILLIPS 12-1-36				11-16-36	

NAME GEAR - FLOAT - RETRACTING MECH.

OPP. HAND

DWG. SIZE D — 28L1001

CONSOLIDATED VULTEE AIRCRAFT CORP. SAN DIEGO DIVISION . . SAN DIEGO, CALIF.

R 1001782

SUPPLIES & EQUIPMENT CLASSIFICATION			
LET	ALTERATION	DATE	BY
✓	TRACED	4-21-37	CLARK
K	ADDED 28L1031-2 AS PER REQUIREMENTS	3-3-38	Bowers
L	ADDED INFORMATION TO "DETAIL A-A"	10/31/40	Miller
M	FAFNIR # B544. WAS FAFNIR # A544. ON FACE & IN B.M. NO WT CHG	9-24-42	[illegible]

E.O. 18067
E.O. A51269

28L1009-1 ASSEMBLE THESE PARTS (ATTENTION
28L1026-1 TO DOUBLE LEAD IN THD.) SO THAT
28L1022-1 DRIVE NUT HAS 1/64 CLEARANCE EACH
28L1018-1 END WHEN STOPS ARE ENGAGED.

AN502-10-6
AC995-41-6
28L1025
28L1050-4
REF. TO RETAINT FLOAT
NUT-SHEAR-AN320-4
COTTER AN380-2-2
WASHER AC945-4
28L1033
(2) BALL BEARING FAFNIR #37K OR FEDERAL #37R OR EQUIVALENT SPEC. 42B-8 (CADM) PLATE
SEAL-28L1050-2
SEAL-28L1050-3
SEAL-28L1050-4
28L1029
28L1028
28L1012-2
WASHER AN945-4
28L1027
28L1032
28L1024
NUT AN310-4
COTTER AN380-2-2
CLEVIS BOLT-AN24-11
NUT-AN320-4
WASHER AN960-416
COTTER-AN380-2-2
DO NOT TIGHTEN THESE BOLTS TOO MUCH. JOINT SHOULD BE SLIGHTLY FLEXIBLE AC995-47-3

DRILL #A (.203). REAM .217 +.001 -.000
C'SK. 45° x 1/32 DEEP 1 SIDE ONLY
PIN 28L1032 DRIVE FIT.
PEEN OVER END - NOT TO PROTRUDE BEYOND DIM SHOWN.

(K)
28L1031-2
R.D. HEAD TYPE FOR PBY-4
28L1031 HEX. H'D. TYPE FOR PBY-3
SPACER-28L1021 REF. LOCK PUNCH 2 PLACES
(3) BALL BEARING FAFNIR #B544 (M)
28L1014 REF.
28L1016 REF.
28L1017 REF.
28L1023 REF.
CHECK FOR 1/32 MIN CLEAR. IN THIS POSITION
(L)
(ON PB2Y-2) 28L1116 REF.
ON PBY {28L1018 FOR L.H. / 28L1018-1 FOR R.H.} REF.
SCREW-AN510-6-6 REF.
A-A

CLEVIS PIN AN393-7B
WASHER AN960-10
COTTER AN380-2-2
28L1015
BOLT AN3-17
NUT AN310-3
COTTER AN380-2-2
WASHER AN960-10
28L1016
28L1014
PAINTED BLACKBAND
CHECK FREE TRAVEL
A
A
28L1025
28L1023
2 1/2 APPROX.
.6
.6
1.2
·3 TURNS · ACTIVE FOR UNLOCKING
·3 TURNS FOR FREE RECOIL
TOTAL TRAVEL · 6 TURNS OF SHAFT

ENGINEERING INFORMATION

POSITIVE SAFETY STAKE IN 2 PLACES AT SCREW HEAD SLOT, THUS
STAKE SO AS TO FLOW MATERIAL OF SPACER INTO SLOT

										PB2Y-Z ONLY	28L1116	2	2
										PBY-4 ONLY	28L1031-2	2	2
											28L1060-4	2	2
											28L1009-1		1
											28L1009	1	
											28L1052	3	3
											28L1060-3	1	1
											28L1060-2	1	1
											28L1027	1	1
											28L1028	1	1
											28L1032	1	1
										PBY-1,-2,-3 ONLY	28L1031	2	2
											28L1012-2	1	1
											28L1027	1	1
											28L1028	1	1
										AC995-47-3	2	2	28L1026-1		1
										AN310-4	1	1	28L1024	1	
										AN310-3	2	2	28L1025	1	1
										AN960-5-6	2	2	28L1034	1	1
										AC995-4-6	1	1	28L1022-1		1
										AN3-17	2	2	28L1022	1	
										AN960-416	2	2	28L1018-1		1
										AN24-11	2	2	28L1018	1	
													28L1017	1	1
-L	PBY-5	28L1040	1							AN502-10-6	6	6	28L1016	1	1
-R	PBY-5	28L1040	1							AC945-4	2	2	28L1015	1	1
-L	PBY-5A	28L1040-1	1							AN320-4	3	3	28L1014	1	1
-R	PBY-5A	28L1040	1							AN380-2-2	7	7	28L1010-3	1	1
-L	PBY-5B	28L1040	1							AN960-10	3	3	28L1010-2	2	2
-R	PBY-5B	28L1040	1							AN393-7B	1	1	28L1087	1	1
-1/2R	28-5 MA-AC	28L1040-1	1 EA											LH	RH
-1/2R	28-5 SME-Jan	28L1040	1 EA											REQ.		PART NO.		REQ.
-1/2R	28-5 AMC	28L1040-1	1 EA															
-1/2R	28-5 AMM	28L1040	1 EA	O.H.	MODEL	NEXT ASSY.	REQ.	STD PARTS										

LUBRIC. NOTE: 28L1028 BEARING ASSY. SHOULD BE PACKED WITH GREASE BEFORE ASSEMBLING. OTHER BEARINGS & SCREW ARE TO BE LUBRIC. WITH INSTR. OIL

REPLACES			
REPLACED BY			
LIMIT ON DIMENSIONS UNLESS OTHERWISE SPECIFIED	± .010		
[redacted]			
APPROVED	DATE 4-21-37		
CALC. WT. 3.44	ACT. WT.		
SCALE 12" = 1'-0"		REQUIREMENTS PER AIRPLANE	MAT.
AC			
NAVY			
MATERIAL	SPEC.	HEAT TREAT	FINISH

PARTS LIST PER ASSY.

J.S.	[illegible]	[illegible]	
5-26-38	6-8-37		
DRAFT	CHECK	EXAM.	ENG.

CONSOLIDATED AIRCRAFT CORP. BUFFALO, N. Y.
STAMP PT. No. WHERE SHOWN

NAME ASSEMBLY - FLOAT LOCK & RECOIL MECH.

OPP. HAND 28L1010-1

SIZE D — DWG. 28L1010

SUPPLIES & EQUIPMENT CLASSIFICATION			
LET	ALTERATION	DATE	BY
A	TRACED FROM BREWSTER DRWG. NO. B-30012 AFTER CHG. "C"	11-1-37	[illegible]
B.	ON FACE OF DWG., IN MATERIAL B/M, FOR -5, REPLACED "K-3401 X13LG. AL ALL EXTR., 46A9-(T)" WITH "Y-2-A28TX 13" BRO'T. RELEASES UP TO DATE. WT. CHG. NEG.	4-29-93	[illegible]

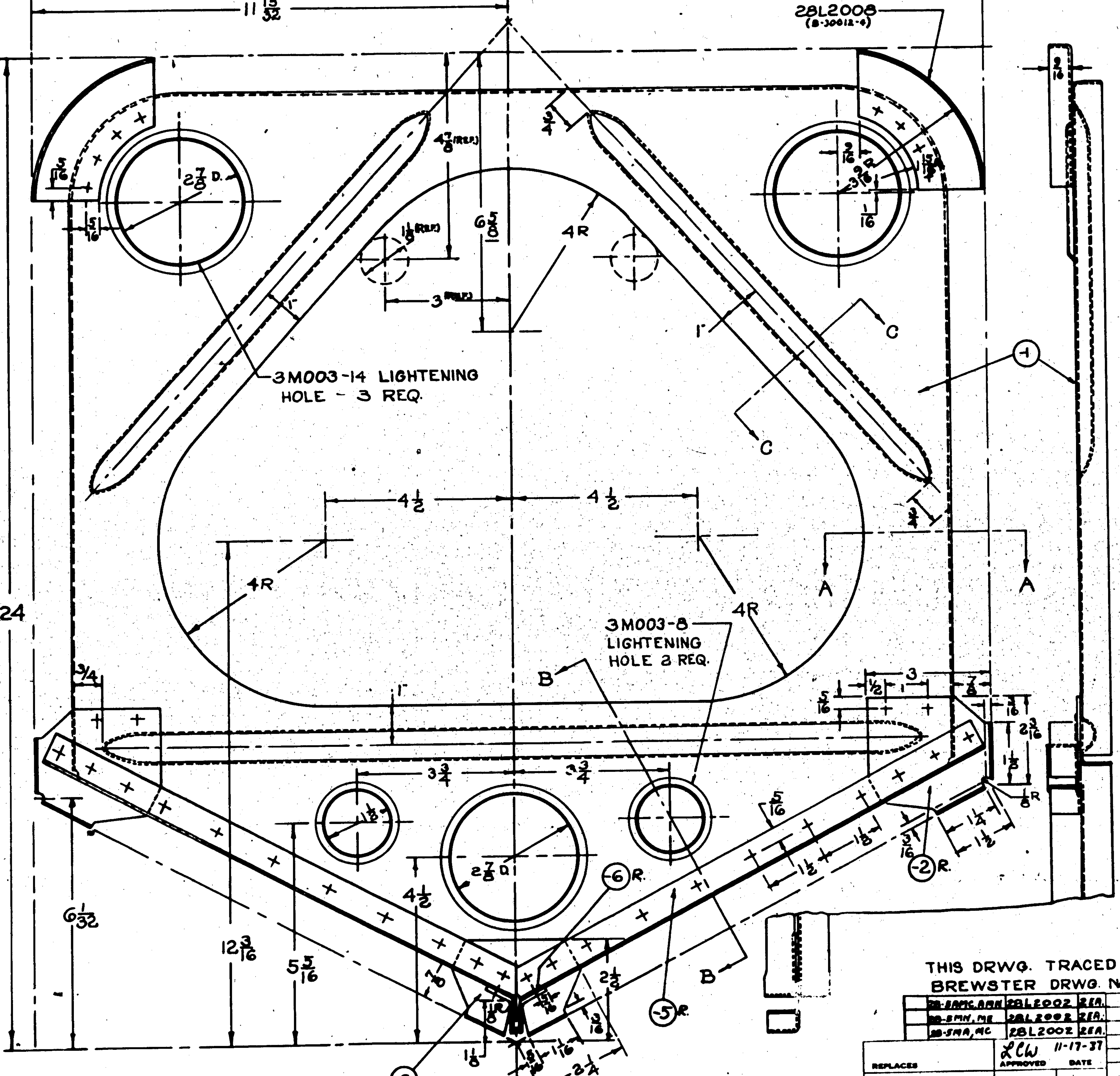

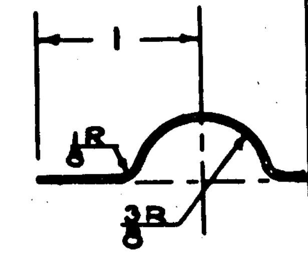

SECTION "C-C"
-FULL SIZE-

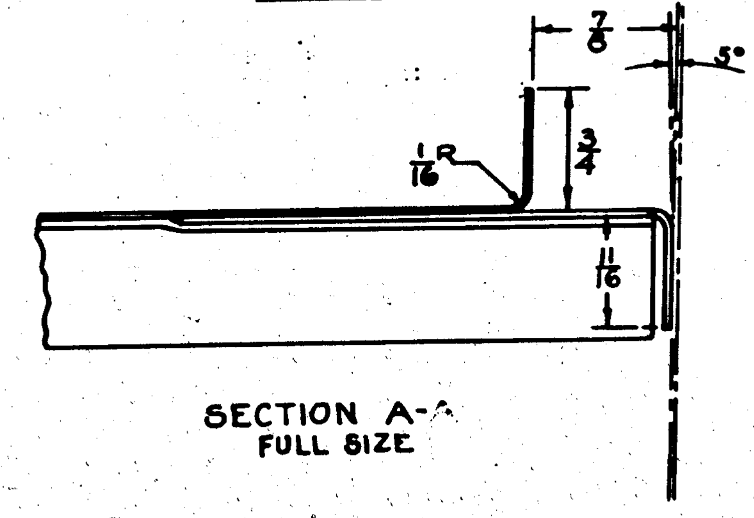

SECTION A-A
FULL SIZE

THIS ANGLE TO DECREASE GRADUALLY FROM 2° AT CHINE TO 0° AT KEEL

AN442-D6 RIVETS LOCATE ON ASSY.

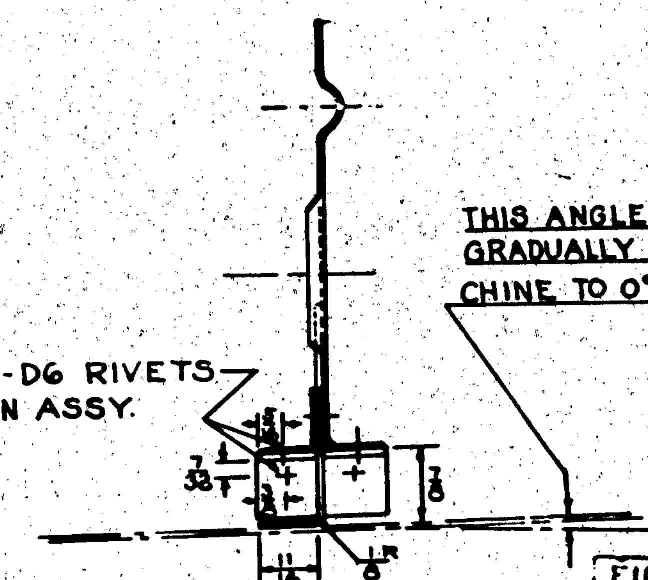

SECTION B-B
HALF SIZE

FINISH CODE	
Z	[redacted]
P	[redacted]
AP	[redacted]
C	[redacted]

VIEW LOOKING FORWARD
-HALF SIZE-

DASH NO.	NAME	MATERIAL	SPEC.	H.T.
-1	PLATE	.040 x 24 x 23.5 AL. ALL. SHT.	47A10 (A)	SR-53
-2	GUSSET	.064 x 4 x 4 AL. ALL. SHT.	47A10 (T)	NONE
-3	GUSSET	.064 x 3 x 3 1/2 AL. ALL. SHT.	47A10 (T)	NONE
-5	ANGLE	Y-2-A28T x 13		NONE
-6	CLIP	.064 x 3/4 x 1 1/2 AL. ALL. SHT.	47A10 (T)	NONE

UNLESS NOTED ALL RIVETS AN442 D5
SPACE RIVETS APPROX. AS SHOWN

THIS DRWG. TRACED FROM BREWSTER DRWG. NO. B-30012

28-5AMC, AMN	28L2002	2 EA.	PBY-5 & 5A	28L2002	2 EA.		
28-5MN, ME	28L2002	2 EA.	PBY-5B	28L2002	2		
28-5MA, MC	28L2002	2 EA.	PBY-3-4	28L2002-R			
			PBY-3-4	28L2003			
			PBY-2	28L2002-R		AN442 D6	8
			PBY-2	28L2002		AN442-D5	34
		O. H.	MODEL	NEXT ASSY.	REQ.	ST'D PARTS	REQ.
			REQUIREMENTS PER AIRPLANE			MAT.	

PART NO.	REQ.
B-30033 & B-30012-4 28L2008	2
-6R	2
-6L	2
-5R	1
-5L	1
-3	1
-2R	1
-2L	1
-1	1

PARTS LIST PER ASSY.

REPLACES	LCW 11-17-37 APPROVED / DATE		
REPLACED BY	CALC. WT.	ACT. WT.	
1/64 LIMIT ON DIMENSIONS UNLESS OTHERWISE SPECIFIED ±	SCALE 6" = 1'-0" & NOTED		

A C								
NAVY NOTED	NOTED	NOTED	Z-P	12-28-36 A.H.	11-17-37 [illegible]			
MATERIAL	SPEC.	HEAT TREAT	FINISH	DRAFT	CHECK	EXAM.	ENG.	

CONSOLIDATED AIRCRAFT CORP.
SAN DIEGO, CALIF.
STAMP PT. NO. WHERE SHOWN

NAME: BELTFRAME *1.5 FLOAT

OPP. HAND

DWG. SIZE D — 28L2005

PRINTED ON "IMPERIAL" TRACING CLOTH

SUPPLIES & EQUIPMENT CLASSIFICATION			
LET	ALTERATION	DATE	BY
B	TRACED	11-17-37	MAY
C	WAS 3/16 R. BREWSTER ENG. ORDER #65	8-17-38	[illegible]
D	DIMS. [illegible] REVISED SEC. AA		
	[illegible] ADDED SEC. BB	11-1-40	KMP
E	M186B SPEC. WMS 46A1 CLASS A	12-13-40	MONSEN
F	46A1-CL4 WAS M186B	12-26-44	SIMS

BREWSTER E.O. #15

BREWSTER E.O. #16

BREWSTER E.O. #375

17/64 DIA.-4 HOLES
JIG LOCATE IN CONJUNCTION WITH 28L2018 (REF.)

CASTING Nº.

SYM. ℄ ARC "a"

POINT OF ARC "a"

END VIEW F-F

SECTION D-D

SECTION B-B

SECTION E-E

END VIEW C-C

ARC "a"

MACHINING REF. LINE

3.000 +.002 -.003 DIA.

FILE FINISH IF NECESSARY TO OBTAIN PROPER RECESS.

SECTION A-A

FINISH:
ANODIZE
P27 PRIMER
GREEN PRIMER

NOTE - MINIMUM DRAFT THROUGHOUT

REPLACES	LCW APPROVED	9-28-36 DATE	
REPLACED BY	.75 CALC. WT.	AGT. WT.	
1/32 CAST. UNLESS OTHERWISE SPECIFIED	SCALE 12"=1'-0"		

	PBY-5B	28L2002	2																				
	PBY-5&5A	28L2002	2																				
	PBY-3-4	28L2002-R																					
	PBY-3-4	28L2002																					
	PBY-2	28L2002-R																					
	PBY-2	28L2002																					
O. H.	MODEL	NEXT ASSY.	REQ.	ST'D PARTS	LH REQ.	RH REQ.	PART NO.	LH REQ.	RH REQ.	LH REQ.	RH REQ.	LH REQ.	RH REQ.	LH REQ.	RH REQ.	LH REQ.	RH REQ.						
REQUIREMENTS PER AIRPLANE				MAT.	PARTS LIST PER ASSY.																		

A C						6/22/38	
NAVAL ALLOY CAST	46A1-CL4	29000 #/□" AS REC.	Z-P - GP			Holmes	Miller
MATERIAL	SPEC.	HEAT TREAT	FINISH			DRAFT	CHECK	EXAM.	ENG.

CONSOLIDATED AIRCRAFT CORP. SAN DIEGO, CALIF.
STAMP PT. NO. WHERE SHOWN

NAME HOUSING - FLOAT FRONT HANDLING LUG

OPP. HAND

DWG. D SIZE 28L2012

SUPPLIES & EQUIPMENT CLASSIFICATION		[redacted]	
LET	ALTERATION	DATE	BY
D	TRACED	11-10-37	J.H.H.
E	WAS .870±.003 BREWSTER ENG. ORDER #71	2-7-39	[illegible]
F	1/4 WAS 5/32 BREWSTER E.O. 17	11-1-40	[illegible]
G	.876 +.002 -.000 WAS .895 +.002 -.000. WT. CHG. NEG.	6-24-52	[illegible]
H	ADDED DIMS: 1 1/2, 5/8, 1 1/4 & 1/4 R; 3/4 PIPE TAP WAS 1/8; 1/4 R WAS 3/16 R; REMOVED DIM 1 1/2. WT. CHG. NEG.	1-9-43	[illegible]

BREWSTER E.O.# 541

BREWSTER E.O.# 618

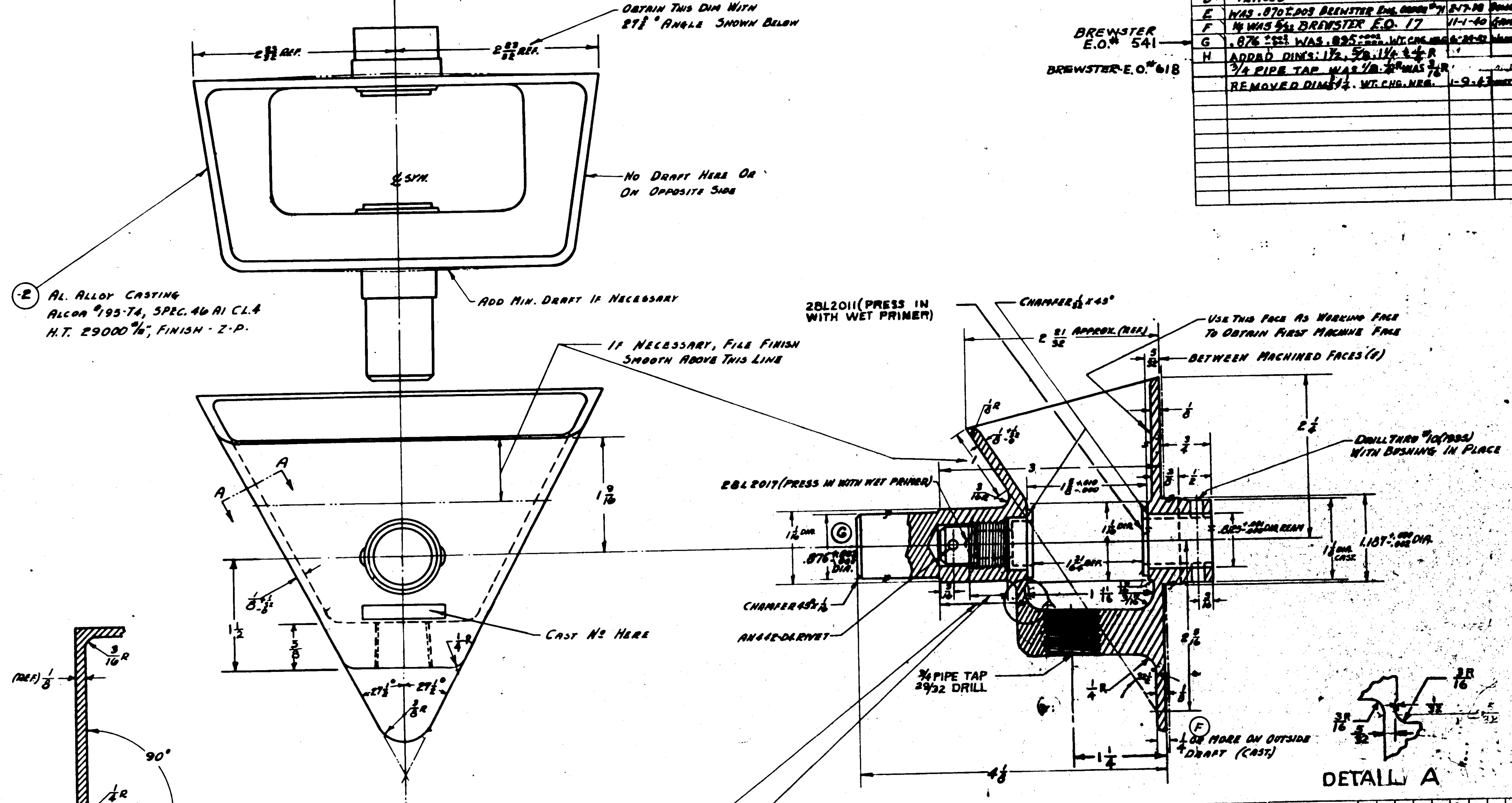

O.H.	MODEL	NEXT ASSY.	REQ.	ST'D PARTS	REQ. LH	REQ. RH	PART NO.	REQ.
	PBY5B	28L2003	2					
	PBY6B	28L2006	2					
	PBY5A	28L2003	2					
	PBY6A	28L2006	2					
	PBY5	28L2006	2					
	PBY-5	28L2003	2					
	28-5MA, 5MC	28L2006	2 EA.					
	28-5MA, 5MC	28L2003	2 EA.					
	28-5ME, MN	28L2006	2 EA.					
	28-5ME, MN	28L2003	2 EA.					
	28-5AMC	28L2006	2					
	28-5AMC	28L2003	2					
	28-5AMN	28L2006	2				28L2017	1
	28-5AMN	28L2003	2				28L2011	1
	[illegible]	[illegible]	2	AN442-D4			28L2020-2	1

REQUIREMENTS PER AIRPLANE | MAT. | PARTS LIST PER ASSY.

REPLACES	YCW APPROVED	9-28-36 DATE
REPLACED BY	.76 SNA. CALC. WT.	ACT. WT.
1/64 LIMIT ON DIMENSIONS UNLESS OTHERWISE SPECIFIED	SCALE 12"=1'-0"	

[redacted]

FINISH CODE	
Z	ANODIC TREATMENT
P	P-27 PRIMER
AP	ALUMINIZED PRIMER
C	CADMIUM PLATE

A C				Ohman	MILLER		
NAVY NOTED	NOTED	NOTED	NOTED	8/31/36	9-21-36		
MATERIAL	SPEC.	HEAT TREAT	FINISH	DRAFT	CHECK	EXAM.	ENG.

CONSOLIDATED AIRCRAFT CORP. SAN DIEGO, CALIF.

STAMP PT. NO. WHERE SHOWN

NAME FITTING-FLOAT-RETR. STRUT TO FLOAT ATTACH.

OPP. HAND

DWG. SIZE D 28L2020

SUPPLIES & EQUIPMENT CLASSIFICATION			
LET	ALTERATION	DATE	BY
F	TRACED	7/28/37	Adkins

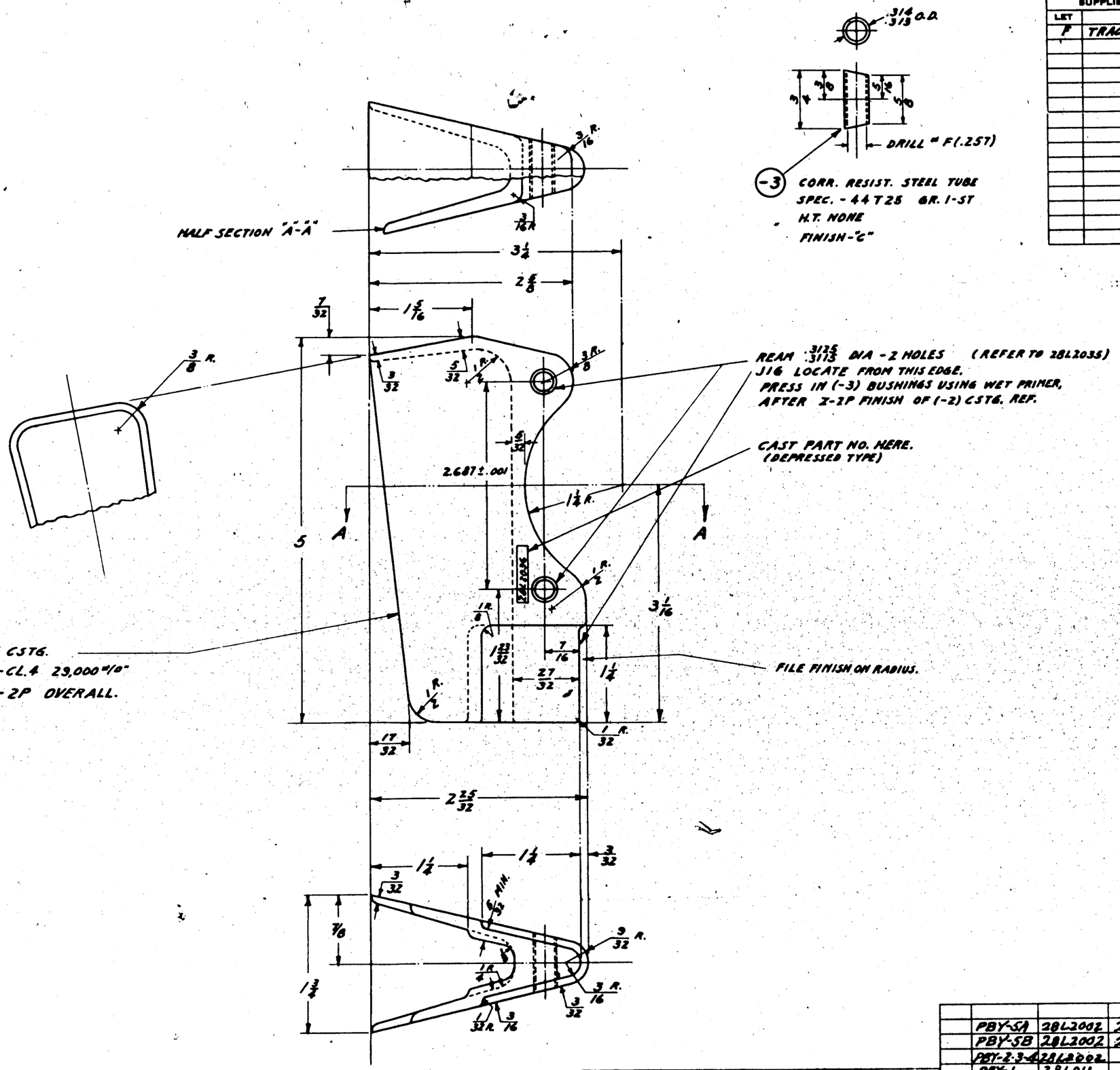

FINISH CODE	
Z	
F	
C	

PBY-5A	28L2002	2			
PBY-5B	28L2002	2			
PBY-2-3-4	28L2002				
PBY-1	28L011		-3	2	
			28L2036 -2	1	
			PART NO.	LAST ASS'Y. USED ON PBY-1	

REPLACES							
REPLACED BY							
LIMIT ON DIMENSIONS UNLESS OTHERWISE SPECIFIED ± 1/32							
[redacted]							
APPROVED LCW 7/28/37 DATE							
CALC.WT. .60	ACT.WT.	O.H.	MODEL	NEXT ASSY.	REQ.		
SCALE 12"=1'-0"		REQUIREMENTS PER AIRPLANE				MAT.	PARTS LIST PER ASSY.
AC							
NAVY NOTED		NOTED		NOTED		NOTED	
MATERIAL		SPEC.		HEAT TREAT		FINISH	

DRAFT	CHECK	EXAM.	ENG.
10-13-36 & PHILLIPS	Adkins 7-28-37	MILLER	

CONSOLIDATED AIRCRAFT CORP. BUFFALO, N. Y.
STAMP PT. No. WHERE SHOWN

NAME HOUSING FLOAT REAR HANDLING LUG

OPP. HAND

SIZE D DWG. 28L2036

SULLIVAN-SUHRBRIER CO., INC. BUFFALO
IMPERIAL TRACING CLOTH

SUPPLIES & EQUIPMENT CLASSIFICATION			
LET	ALTERATION	DATE	BY
A	TRACED FROM BREWSTER DWG. N° B-30027	11-16-37	
	AFTER CHG. "A"		

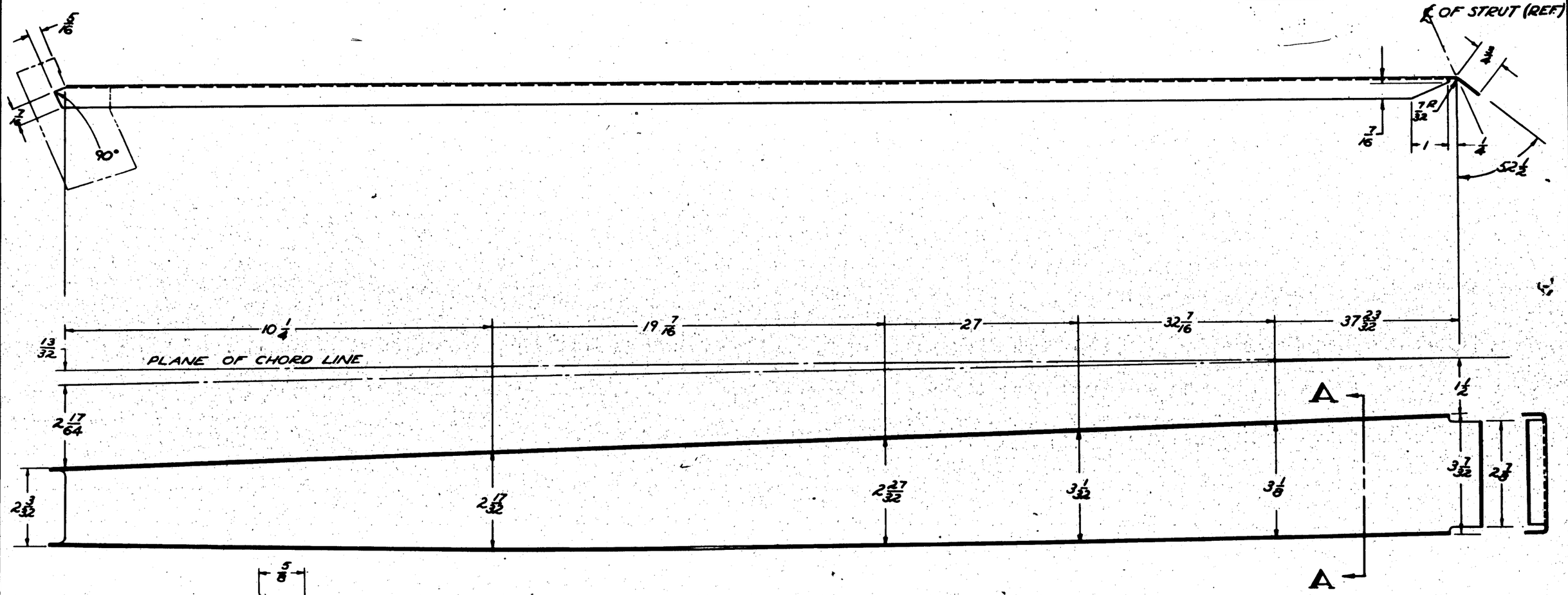

SECTION A A
FULL SIZE

NOTE
CONTOUR OFFSETS GIVEN TO
OUTSIDE OF FLANGE

THIS DRAWING TRACED FROM
BREWSTER DRWG N° B-30027

FINISH:
ANODIZE
P27 PRIMER
GREEN PRIMER

-R	PBY-5A&B	28L2000	1EA																				
-L	PBY-5A&B	28L2000	1EA																				
R	PBY-3-4	28L2000R																					
	PBY-3-4	28L2000																					
R	PBY-2	28L2000R																					
	PBY-2	28L2000																					
O. H.	MODEL	NEXT ASSY.	REQ.	ST'D PARTS	LH	RH	PART NO.	LH	RH	LH	RH	LH	RH	LH	RH	LH	RH	LH	RH				
					REQ.			REQ.		REQ.		REQ.		REQ.		REQ.		REQ.					
REQUIREMENTS PER AIRPLANE				MAT.	PARTS LIST PER ASSY.																		

REPLACES	APPROVED	DATE
	XCL	11-16-37
REPLACED BY	CALC. WT.	ACT. WT.
1/32 LIMIT ON DIMENSIONS UNLESS ± OTHERWISE SPECIFIED	1/2 & NOTED	SCALE

A C				3-2597 11-16-37
NAVY AL. ALLOY .030 SHEET	47A10(A)	SR-53	Z-R	JJB
MATERIAL	SPEC.	HEAT TREAT	FINISH	DRAFT CHECK EXAM. ENG.

CONSOLIDATED AIRCRAFT CORP.
SAN DIEGO, CALIF.
STAMP PT. NO. WHERE SHOWN

NAME
CHANNEL
UPPER FRONT - FLOAT BRACE

OPP. HAND 28L2047R

DWG. D SIZE 28L2047

SUPPLIES & EQUIPMENT CLASSIFICATION			
LET	ALTERATION	DATE	BY
A	TRACED FROM BREWSTER		
	DRWG. NO. B-30028 AFTER CHG 'A'	12-37	[illegible]

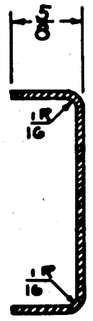

SECTION A-A
FULL SIZE

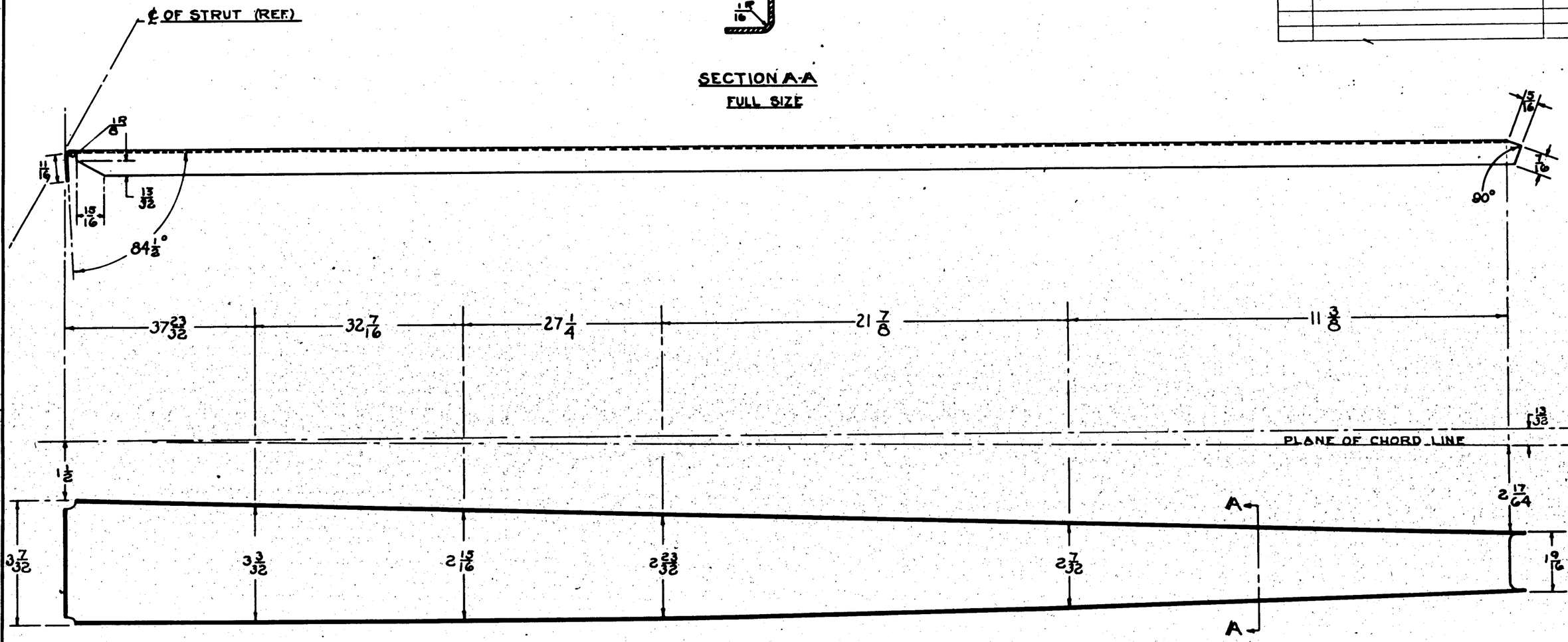

NOTE:
CONTOUR OFFSETS GIVEN TO OUTSIDE OF FLANGE

FINISH:
ANODIZE
P27 PRIMER
2 GREEN PRIMER

THIS DRWG. TRACED FROM BREWSTER DRWG. NO. B-30028

-R	PBY-5B	28L2000	1																		
-R	PBY-5A	28L2000	1																		
-L	PBY-5B	28L2000	1																		
-L	PBY-5A	28L2000	1																		
R	PBY-3	28L2000-R																			
L	PBY-3	28L2000																			
R	PBY-2	28L2000-R																			
L	PBY-2	28L2000																			
O. H.	MODEL	NEXT ASSY.	REQ.	ST'D PARTS	LH REQ.	RH REQ.	PART NO.	LH REQ.	RH REQ.	LH REQ.	RH REQ.	LH REQ.	RH REQ.	LH REQ.	RH REQ.	LH REQ.	RH REQ.				
REQUIREMENTS PER AIRPLANE				MAT.	PARTS LIST PER ASSY.																

REPLACES	APPROVED	DATE	A C		
REPLACED BY	CALC. WT.	ACT. WT.	NAVY .064 × 5 × 39 AL. ALLOY SHT.	47A10 (A)	SR-53
LIMIT ON DIMENSIONS UNLESS ± OTHERWISE SPECIFIED: 1/32	SCALE: 6" = 1'-0" UNLESS NOTED		MATERIAL	SPEC.	HEAT TREAT

	11-16-37	Z-R (GP 2 COATS PRIMER 2 COATS GP)	3-26-37 / 11-16-37
		FINISH	DRAFT / CHECK / EXAM. / ENG.

CONSOLIDATED AIRCRAFT CORP. SAN DIEGO, CALIF.
STAMP PT. NO. WHERE SHOWN

NAME: CHANNEL
REAR UPPER FLOAT BRACE

OPP. HAND 28L2048-R

SIZE D

28L2048

PRINTED ON IMPERIAL TRACING CLOTH

SUPPLIES & EQUIPMENT CLASSIFICATION			
LET	ALTERATION	DATE	BY
A	TRACED	7-20-38	Stevens
B N	CHANGED UPPER LIP ANGLE FROM 45° TO 70°	4-15-41	HANSEN

PBY-5 E.C.0403
CD-3-5 ALL DRAWINGS

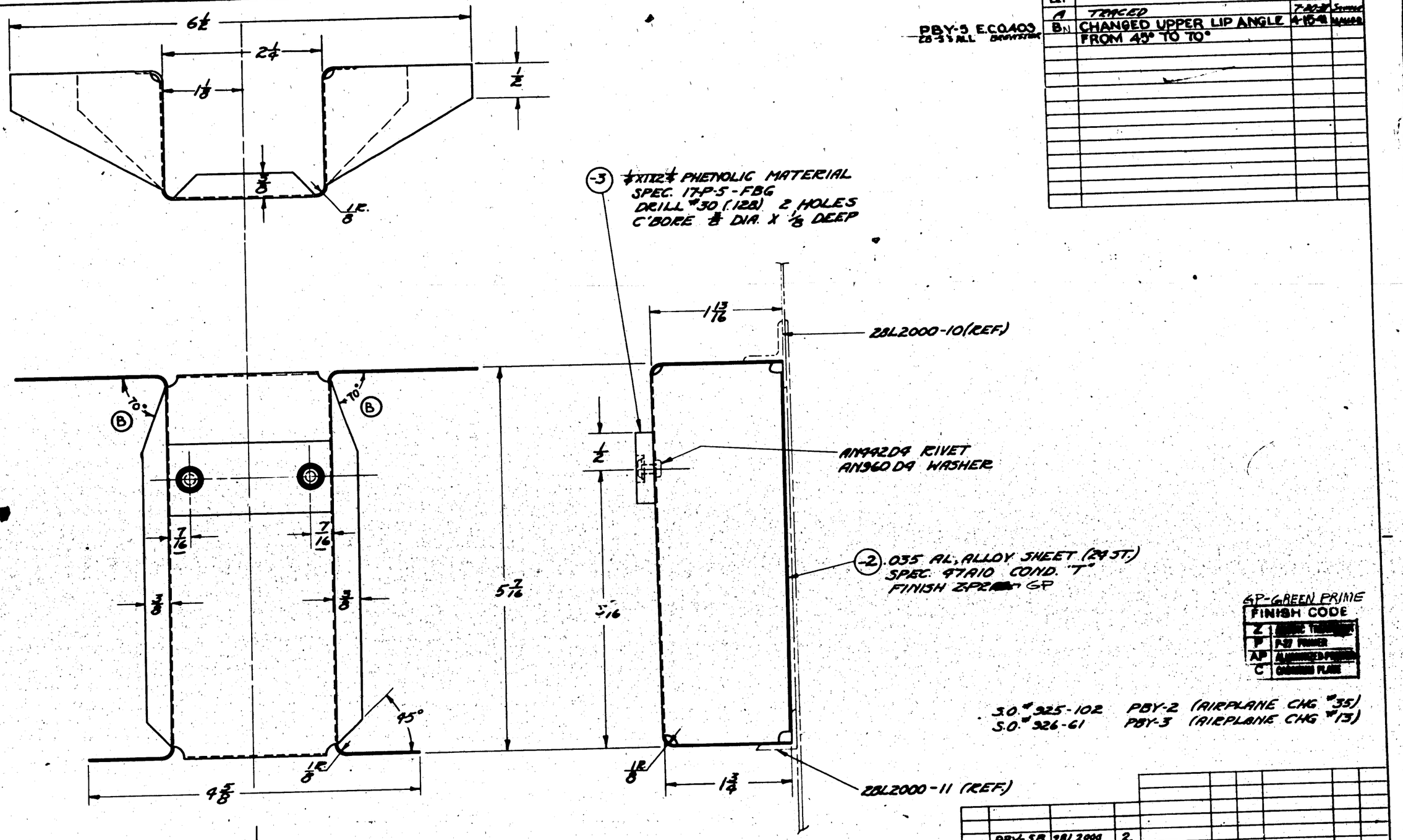

GP-GREEN PRIME

FINISH CODE	
Z	[illegible]
P	PRIMER
AP	[illegible]
C	CHROMIC PLATE

S.O. # 325-102 PBY-2 (AIRPLANE CHG #35)
S.O. # 326-61 PBY-3 (AIRPLANE CHG #13)

PBY-5B	28L2000	2									
28-5AN	28L2000	2									
28-5MB	28L2000	2									
28-5MC	28L2000	2									
28-5MA	28L2000	2									
28-5AMC	28L2000	2									
PBY-5A	28L2000	2									
PBY-5	28L2000 [illegible]	2									
PBY-4	28L2000 [illegible]										
PBY-3	28L2000 [illegible]		AN442-D4						-3	1	
PBY-2	28L2000 [illegible]		AN960-D4	2			28L2051-2		1		
				LH REQ.	RH REQ.		PART NO.		LH REQ.	RH REQ.	

REPLACES	APPROVED [illegible] 7-20-38 DATE	O.H.	MODEL	NEXT ASSY.	REQ.	ST'D PARTS	PARTS LIST PER ASSY.
REPLACED BY	CALC. WT. .21 ACT. WT.	REQUIREMENTS PER AIRPLANE				MAT.	6-Y-38 J.P.K.
LIMIT ON DIMENSIONS UNLESS OTHERWISE SPECIFIED ±1/64	SCALE 12" = 1'-0"						DRAWN [illegible] TRACED [illegible] CHECKED E
	AC						
	NAVY NOTED	NOTED	NONE	NOTED			DRAFT CHECK EXAM. ENG.
	MATERIAL	SPEC.	HEAT TREAT	FINISH			

CONSOLIDATED AIRCRAFT CORP.
BUFFALO, N. Y.
STAMP PT. No. WHERE SHOWN

NAME BRACKET - FLOAT - LOWER RETRACTING STRUT STOP

OPP. HAND

SIZE D

28L2051

SULLIVAN-MCKEOGAN CO., INC. BUFFALO

PBY-5A
20-10
28-5AMC E.O. A1312

LET	ALTERATION	DATE	BY
A	15° ± ½° WAS 16° ± ½°	5-12-44	[illegible]

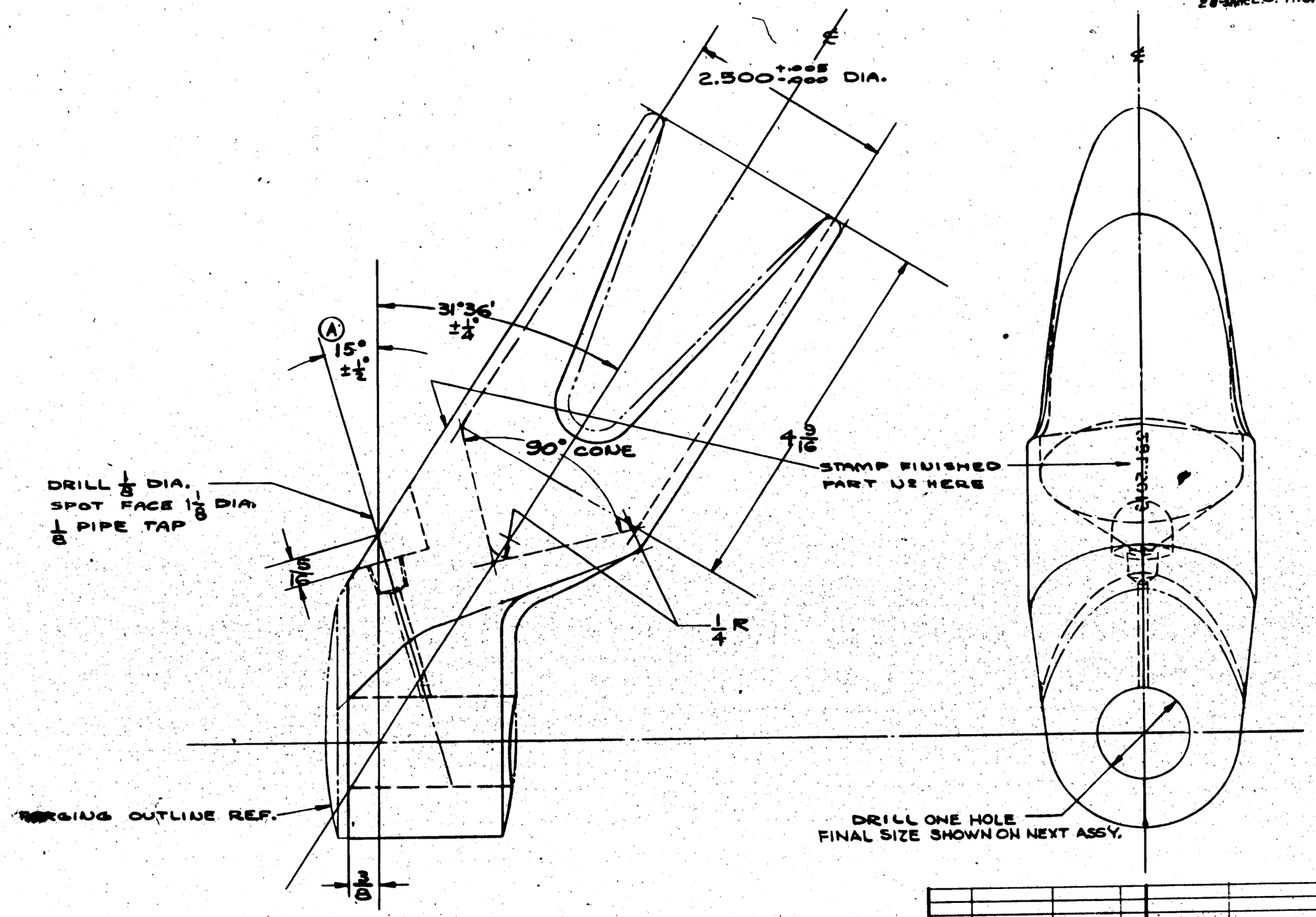

NOTE:

THIS PART TO BE H.T. AFTER WELDING AS PART OF 28L5015 ASS'Y.

FOR FUTURE SPARES ONLY

ASSY. DASH NO.	MODEL	NEXT ASSY.	REQ.
	OAU-1	28L5015	2
	28-5AMC	28L5015	2
	PBY-5A	28L5015	2
	XPBY-5A	28L5015	2

REQUIREMENTS PER AIRPLANE

REPLACES — Calc. Wt. 3.9 lbs

REPLACED BY — Act. Wt.

Limit on Dimensions Unless Otherwise Specified: ± 1/64

SCALE 12" = 1'-0"

STAMP PART NUMBER WHERE SHOWN

FORGING 28L5017 MAKE FROM

PART No.	STOCK	MATERIAL	SPEC.	LH REQ. -0	RH REQ. -2	LH REQ. -3	RH REQ. -4	LH REQ. -5	RH REQ.
PARTS LIST PER ASSY.									

AC

NAVY NOTED

HEAT TREAT

NONE

FINISH

5-3-44

SUBJECT [illegible]

DRAFT | CHECK | STRUCT. | MAT | APPROV. | ENG.

NAME FITTING-MAIN. LAND. GEAR-LOWER VEE STRUT REAR

OPP. HAND

CONSOLIDATED AIRCRAFT CORP. SAN DIEGO, CALIF.

DWG. SIZE D

28L5013

R

LET	ALTERATION	DATE	BY
A	CHG'D. [illegible]	[illegible]	[illegible]

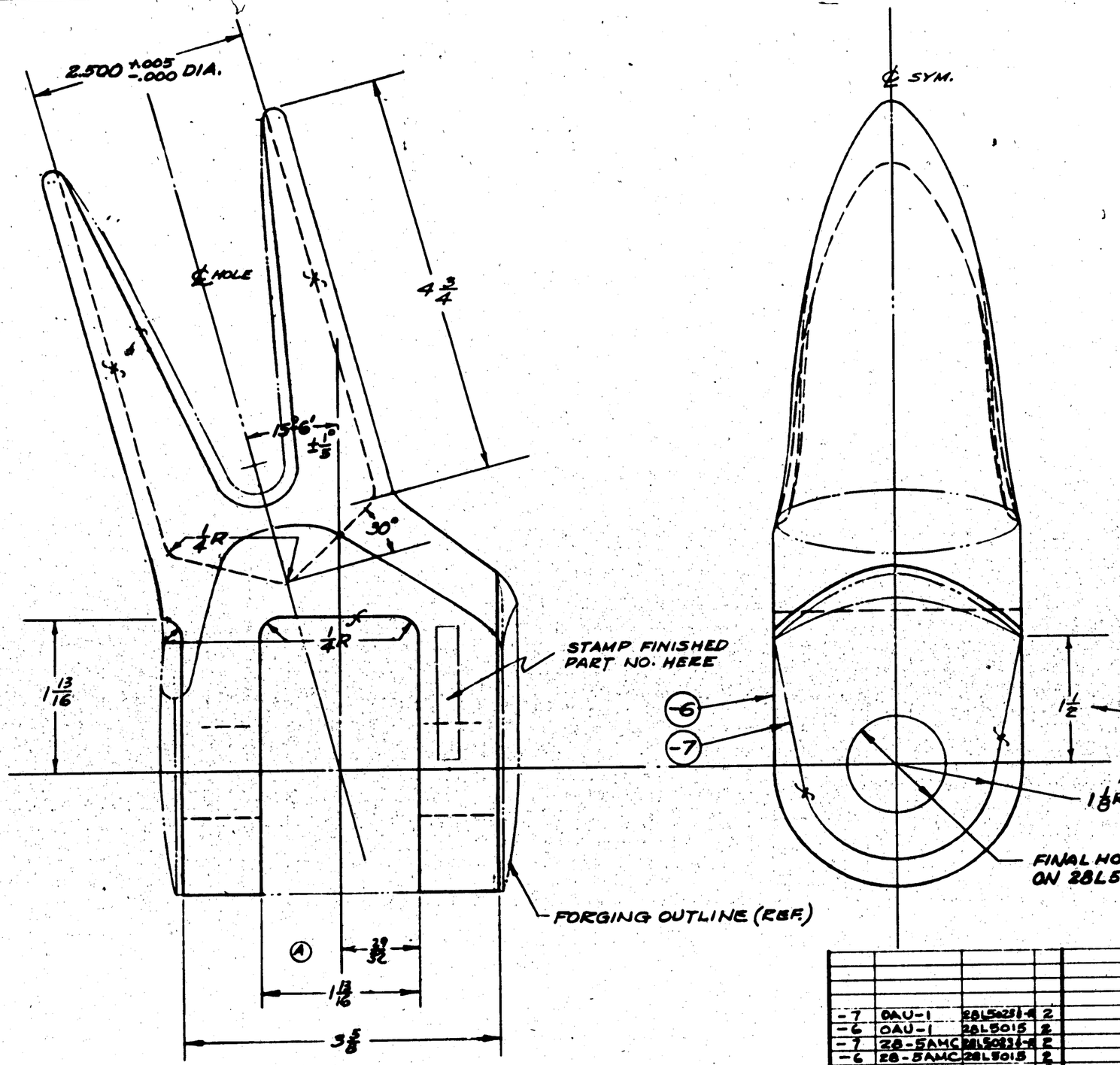

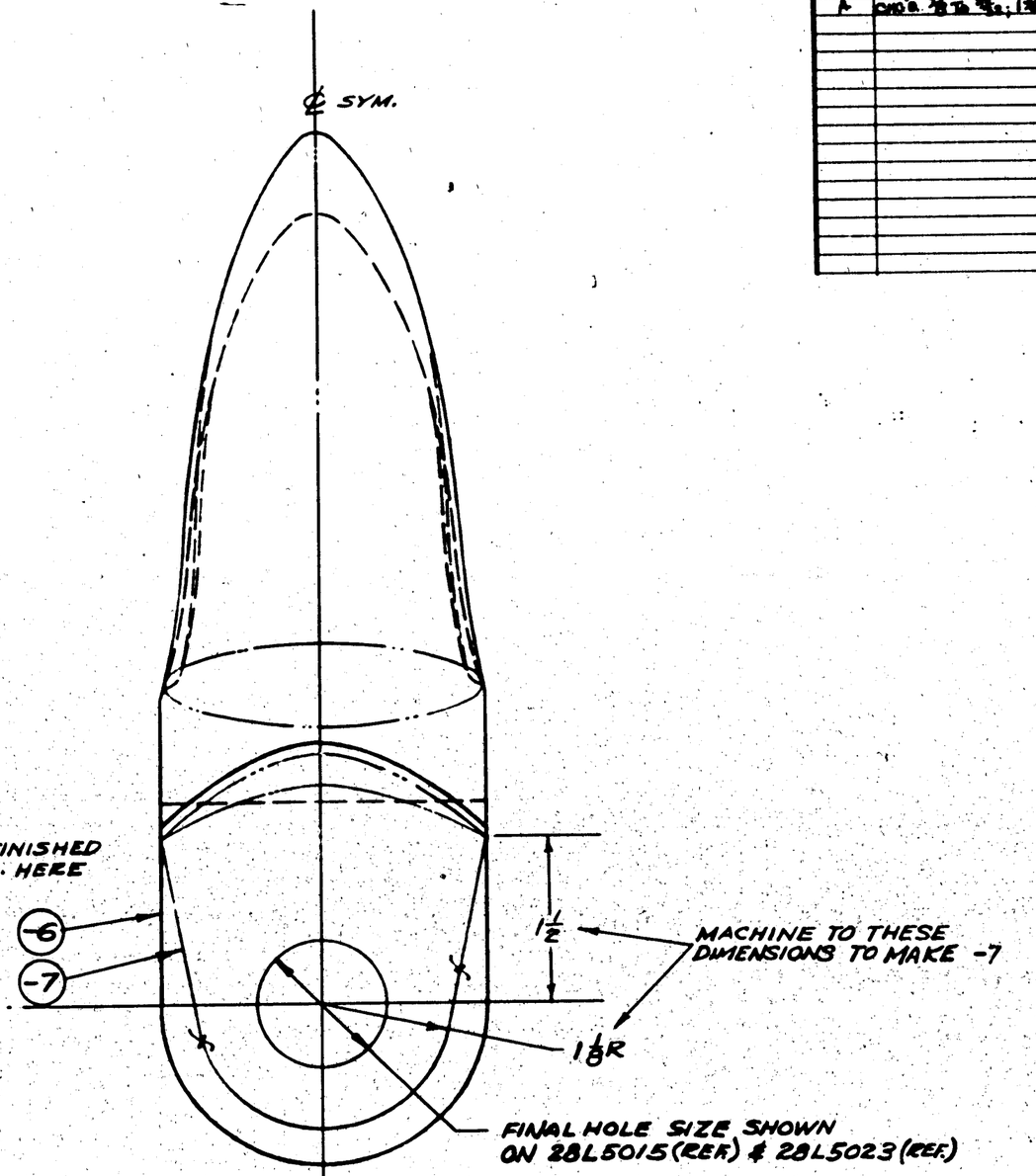

NOTE:
THIS PART TO BE H.T. AFTER WELDING AS PART OF 28L5015 } ASS'Y.
& 28L5023 }

ASSY. DASH No.	MODEL	NEXT ASSY	REQ'D
-7	OAU-1	28L5023-6	2
-6	OAU-1	28L5015	2
-7	28-5AMC	28L5023-6	2
-6	28-5AMC	28L5015	2
-7	PBY5A	28L5023	2
-6	PBY5A	28L5015	2

REQUIREMENTS PER AIRPLANE

REPLACES -6 28L5014-6 CHG'D. BY

REPLACED BY ACT. BY

UNLESS OTHERWISE SPECIFIED + 1/64 SCALE 12" = 1'-0"

STAMP PART NUMBER WHERE SHOWN

-7 28L5016 FORGING & MAKE FROM

PART No.	STOCK	MATERIAL	SPEC.	LH REQ.	RH REQ.	LH REQ.	RH REQ.	LH REQ.	RH REQ.	LH REQ.	RH REQ.	LH REQ.	RH REQ.
PARTS LIST PER ASSY.				-0	-2	-3	-4	-5					

AC

NAVY NOTED — NONE

HEAT TREAT — FINISH

	DRAFT	CHECK	STRUCT	MAT	APPROV.	ENG.
5-9-40	Goldsmith	Cloud	Green	[illegible]	[illegible]	[illegible]

NAME FITTING-M.L.G.-UPPER & LOWER VEE STRUT-FRONT

CONSOLIDATED AIRCRAFT CORP. San Diego, Calif.

OPP. HAND

SIZE D

28L5014-R

LET	ALTERATION	DATE	BY
A	REVISED	9/1/39	CHECK
B	MAT'L X4130 WAS W.O.4125 A SPEC AN-QQ-S-684 WAS 27-105 NO WT. CHG	7/13/42	
C	ADDED NOTE (4): NE.8735--STEEL (NEG. WT. CHG)	9-8-42	

FORG. NOT AFF.

FORG. NOT AFF.

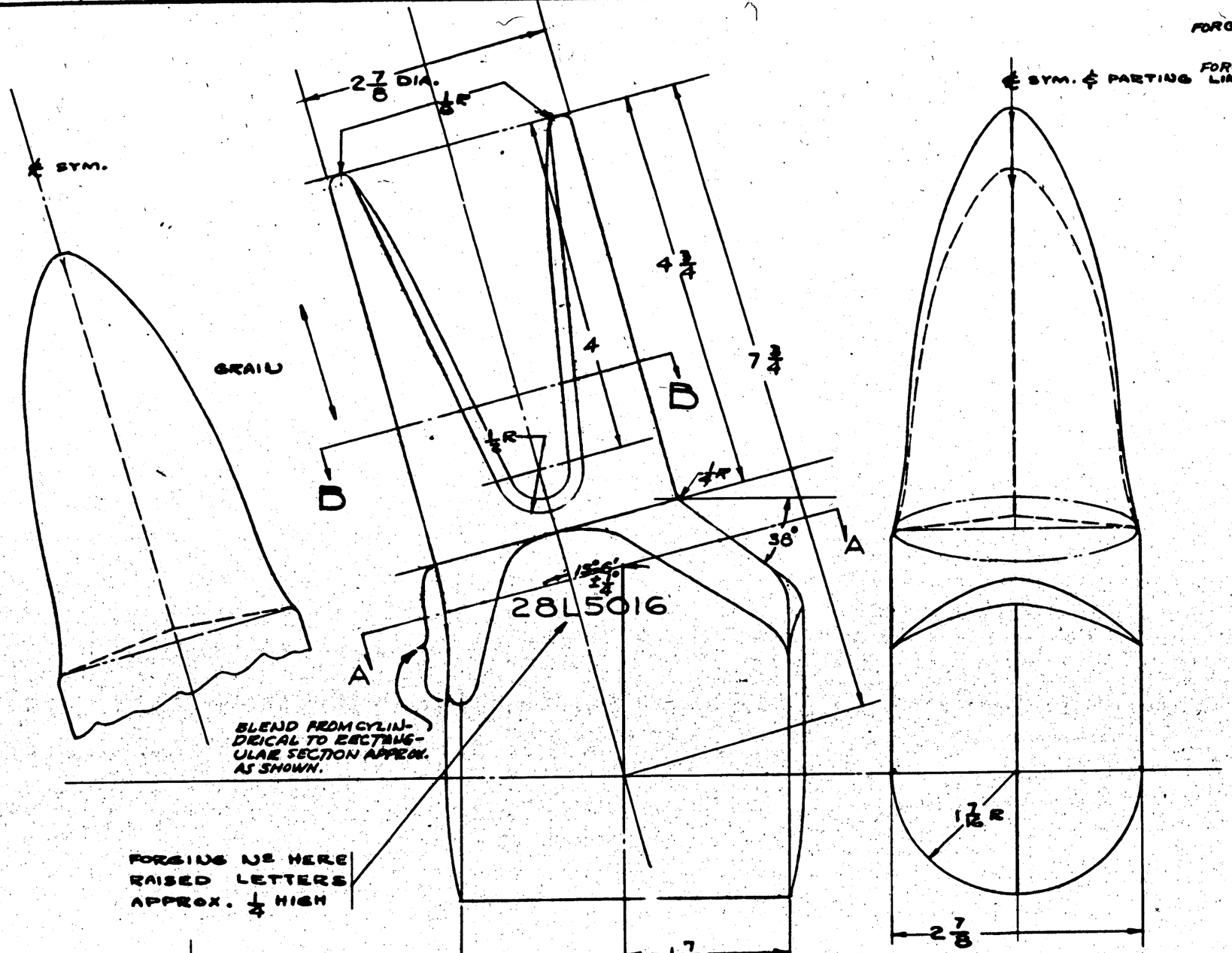

NOTES:

1) 7° DRAFT ANGLES
2) CORNER RADII 1/8
3) DIMENSIONAL TOLERANCES ±1/32 SHIFT 1/64
(4) NE.8735-8739-SAE 4340 STEEL MAY BE USED AS ALTERNATE FOR CHR-MOLY. STEEL.

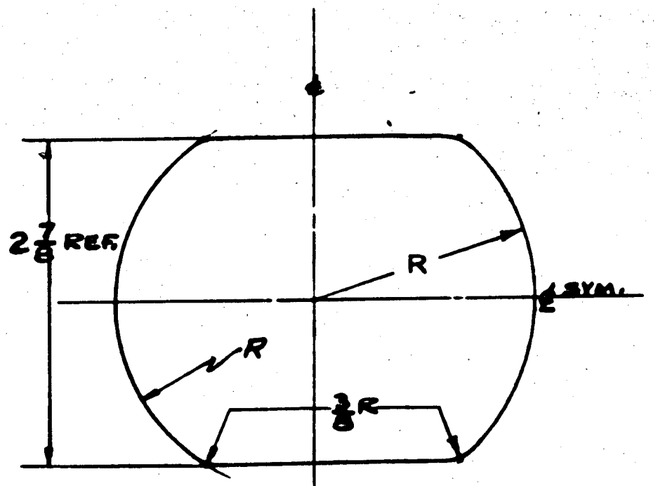

SEC. A-A

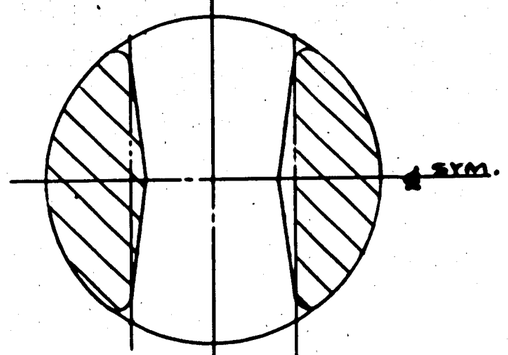

SEC. B-B

28-5 AMPLIFICATION 4

28-5 AMC 28L5014 4
PBY-5 A 28L5014 4

ASSY. SASH NO.	MODEL	NEXT ASSY.	REQ.

REQUIREMENTS PER AIRPLANE

REPLACES	15.1 GALS. WT.
REPLACED BY	ASY. WT.
± VOTED	SCALE 12"=1'-0"

STAMP PART NUMBER WHERE SHOWN

(SEE NOTE 4) FORGING — STEEL - X4130 CHR. MOLY. AN-QQ-S-685

PART NO.	STOCK	MATERIAL	SPEC.	LH REQ. -0	RH REQ. -2	LH REQ. -3	RH REQ. -4	LH REQ.	RH REQ.

PARTS LIST PER ASSY.

AC
NAVY AS REC'D. ALUMINIZED
HEAT TREAT

NONE
FINISH

6-5-40
BUDISH
DRAFT | CHECK | STRUCT. | MAT | APPROV. | ENG.

NAME FITTING-MAIN LAND. GEAR VEE STRUT FRONT (FORGING)
OPP. HAND
CONSOLIDATED AIRCRAFT CORP. SAN DIEGO, CALIF.
SIZE D
28L5016

R

LET	ALTERATION	DATE	BY
A	REVISED		
B	MAT X4130 WAS W.D 4135 ℄		
	SPEC. AN-QQ-S-684 WAS 57-105		
	NO WT CHG	7/10/42	Bauer
C	ADDED NOTE (4) : "NE 8739 -- STEEL"		
	(NEG. WT. CHG.)	9-9-42	Bauer

FORG NOT AFF.

℄ SYM. ℄ FORG NOT AFFECTED PARTING LIVE

$2\frac{13}{16}$ DIA.

B

$\frac{1}{8}$R

PARTING LINE

GRAIN

B

$31°41'$ $\pm\frac{1}{4}°$

FORGING NO HERE-
RAISED LETTERS
APPROX. $\frac{1}{4}$ HIGH

28L5017

4

$8\frac{1}{2}$

A

$\frac{1}{2}$R

$2\frac{3}{8}$

$1\frac{3}{4}$

A

$\frac{15}{32}$

$1\frac{29}{32}$

$\frac{1}{2}$R-TRUE

$1\frac{3}{16}$R

NOTES:

1) 7° DRAFT ANGLES
2) CORNER RADII $\frac{1}{8}$
3) DIMENSIONAL TOLERANCES $\pm\frac{1}{32}$; SHIFT $\frac{1}{64}$
4) NE 8739, SAE 4340 STEEL MAY BE USED AS ALTERNATE FOR CHR-MOLY. STEEL

© ©

PARTING LINE

$2\frac{13}{16}$ DIA. REF.

$\frac{1}{2}$ R-TRUE

SEC. A-A

SEC. B-B

FOR FUTURE SPARES ONLY

ASSY. SASH NO.	MODEL	NEXT ASSY.	REQ.
	28-5 ARMY	28L5010	2
	28-5 ARMY	28L5013	2
	28-5 ANC	28L5008	2
	28-5 AMC	28L5015	2
	PBY-5A	28L5018	2
	PBY-5A	28L5019	2
	XPBY-5A	28L5014	2
	XPBY-5A	28L5010	2

REQUIREMENTS PER AIRPLANE

REPLACES — 10.5# Calc. Wt.

REPLACED BY — Act. Wt.

UNLESS OTHERWISE SPECIFIED DIMENSIONS ARE IN ACCORDANCE WITH + NOTED

SCALE 12"=1'-0"

STAMP PART NUMBER WHERE SHOWN

PART No.	STOCK	MATERIAL	SPEC.	LH REQ.	RH REQ.	LH REQ.	RH REQ.	LH REQ.	RH REQ.	LH REQ.	RH REQ.	LH REQ.	RH REQ.
PARTS LIST PER ASSY.	FORGING	(SEE NOTE 4) X4130 C.M. STEEL AN-QQ-S-684		-0		-2		-3		-4		-5	

AC
NAVY AS REC'D UNSEALED
HEAT TREAT

NONE
FINISH

2-3-43 REVISED
DRAFT | CHECK | STRUCT | MAT | APPROV. | ENG.

NAME FITTING-MAIN. LAND. GEAR
VEE STRUT REAR (FORGING)
OPP. HAND

CONSOLIDATED AIRCRAFT CORP. San Diego, Calif.

DWG. SIZE D

28L5017

R

LET	ALTERATION	DATE	BY
A	CHANGED: 6°30' ± 1/2° TO 8°00' ± 1/2°	4-15-41	[illegible]

PBY-5A
OA-10
28-5AMC
} E.O. A1318.

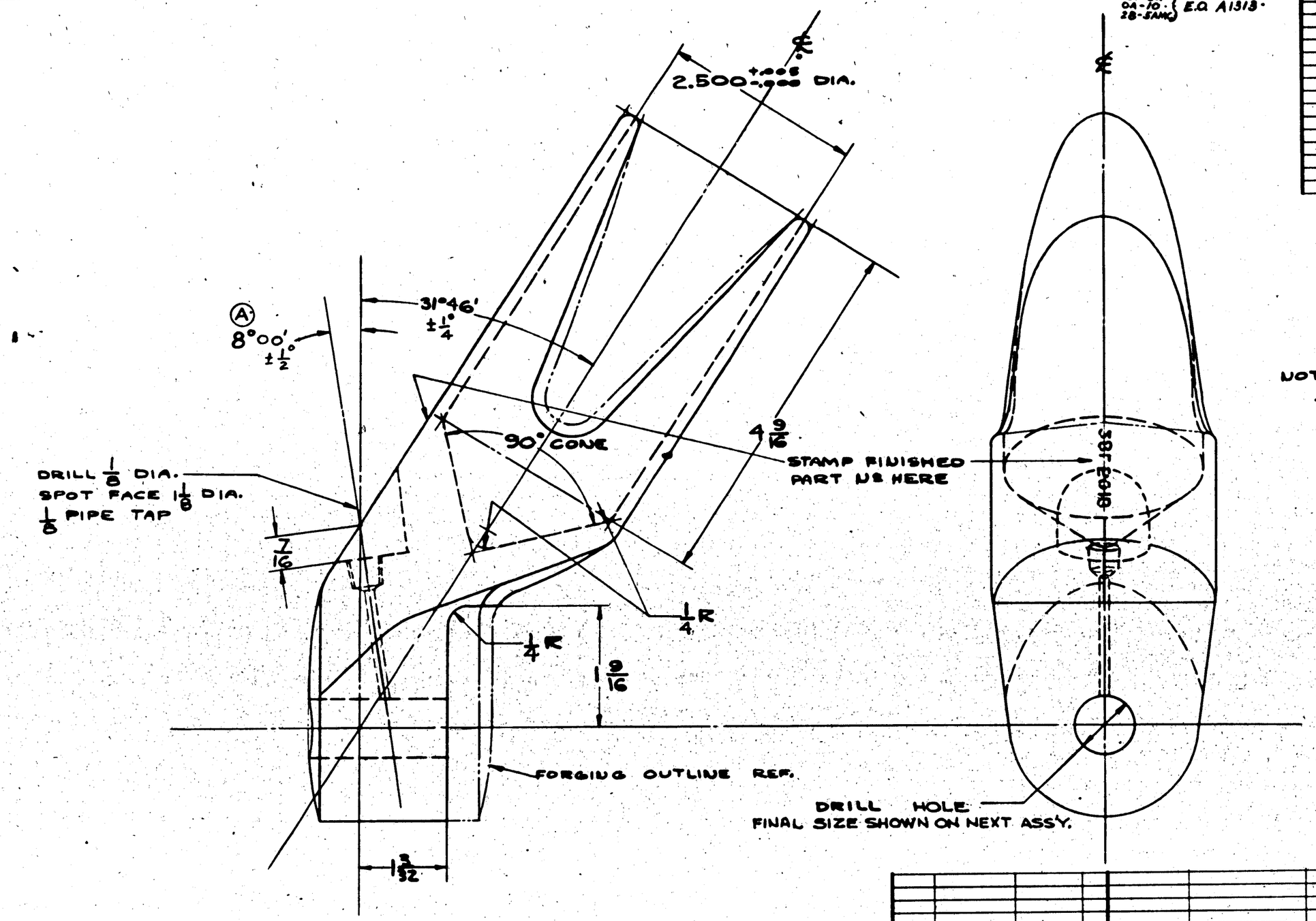

NOTE:
THIS PART TO BE H.T. AFTER WELDING AS PART OF 28L5023 ASS'Y.

FOR FUTURE SPARES ONLY

OAU-1	28L5023	2
28-5AMC	28L5023	2
PBY-5A	28L5023	2
XPBY-5A	28L4017	2

ASSY. DASH NO.	MODEL	NEXT ASSY.	REQ.

REQUIREMENTS PER AIRPLANE

REPLACES — 40 GALS. WT.
REPLACED BY — ASY. WT.
SCALE 12"=1'-0"
STAMP PART NUMBER WHERE SHOWN

FORGING 28L5017 MAKE FROM

PART No.	STOCK	MATERIAL	SPEC.	1 LH REQ.	RH REQ.	LH REQ.	RH REQ.	LH REQ.	RH REQ.	LH REQ.	RH REQ.	LH REQ.	RH REQ.
PARTS LIST PER ASSY.				-0	-2	-3	-4	-5					

AC
NAVY NOTED
HEAT TREAT

NONE
FINISH

DRAFT	CHECK	STRUCT.	MAT	APPROV.	ENG.
4-9-41	[illegible]	[illegible]	[illegible]	[illegible]	[illegible]

NAME FITTING-MAIN LAND. GEAR UPPER VEE STRUT REAR
OPP. HAND
CONSOLIDATED AIRCRAFT CORP. SAN DIEGO, CALIF.
DWG. SIZE D
28L5018

R

LET	ALTERATION	DATE	BY
A	REVISED	9/4/40	Revised
B	CHG'D. DRWG. TO MAKE IT A LEFT-HANDED PART	10/16/40	[illegible]
C	MAT'L. X4130 WAS W.D. 4135 E SPEC. AN-QQ-S-686 WAS 57-106 NO WT. CHG.	7/15/42	[illegible]

FORG. NOT AFF

℄ SYM. OF -6 & PARTING LINE

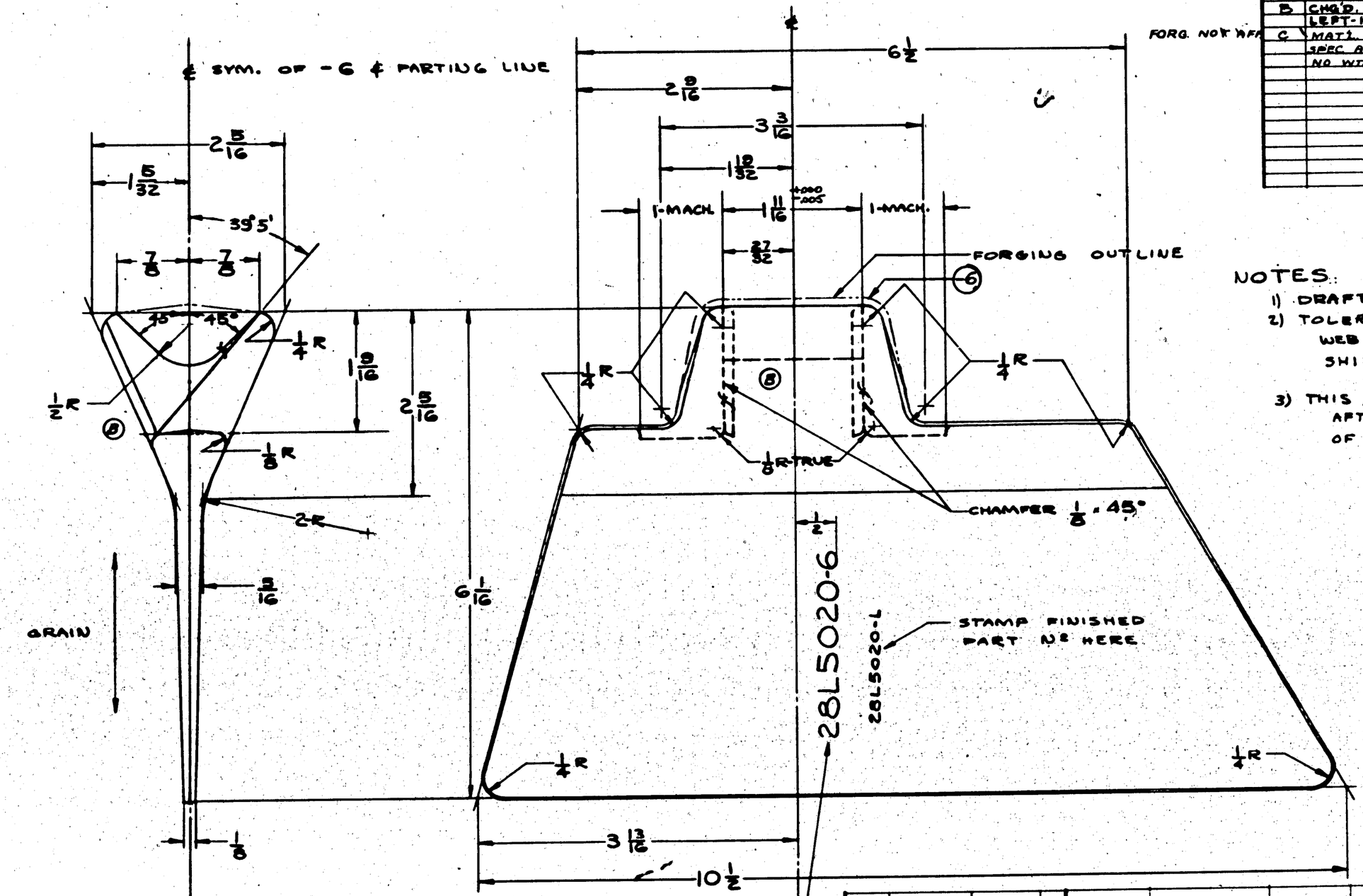

NOTES:

1) DRAFT ANGLES 7°
2) TOLERANCES:
   WEB THICKNESS ±1/64; OTHERS ±1/32
   SHIFT 1/64; MACH. ±.010
3) THIS PART WILL BE H.T. AFTER WELDING AS PART OF 28L5023 ASS'Y.

L&R	PBY-5	28L5023	1 EA
L&R	28-5AMC	28L5023	1 EA
LC-R	28-5AMC	28L5023	1 EA
LC-R	PBY-5A	28L5023	1 EA

ASSY. DASH NO.	MODEL	NEXT ASSY.	REQ.
REQUIREMENTS PER AIRPLANE			

REPLACES — CALC. WT.

REPLACED BY — ADV. WT.

SCALE 12"=1'-0"

+ NOTED

STAMP PART NUMBER WHERE SHOWN

PART No.	STOCK	MATERIAL	SPEC.	LH REQ.	RH REQ.	LH REQ.	RH REQ.	LH REQ.	RH REQ.	LH REQ.	RH REQ.	LH REQ.	RH REQ.
-6	FORGING	STEEL - CHR. MOLY.	X4130 AN-QQ-S-686										
PARTS LIST PER ASSY.				-0		-2		-3		-4		-5	

AC — 6-10-40

AS REC'D NAVY ALUMINALED — NONE — HEAT TREAT — FINISH

DRAFT [illegible] CHECK [illegible] STRUCT. [illegible] MAT [illegible] Approv. [illegible] ENG. [illegible]

NAME PLATE - MAIN LAND. GEAR - UPPER VEE STRUT CENTER FITTING

OPP. HAND 28L5020-R

CONSOLIDATED AIRCRAFT CORP. San Diego, Calif.

SIZE D

28L5020

R

LET	ALTERATION	DATE	BY
A	REVISED	[illegible]	[illegible]
B	MAT'L X4130 WAS W.D 4135 & SPEC. AN-QQ-S-684 WAS 57-105 NO WT. CHG.	[illegible]	[illegible]
C	ADDED NOTE(5) "NE 8739 -- STEEL" (NEG. WT. CHG.)	9-8-42	[illegible]

FORG. NOT AFF.

FORG. NOT AFF.

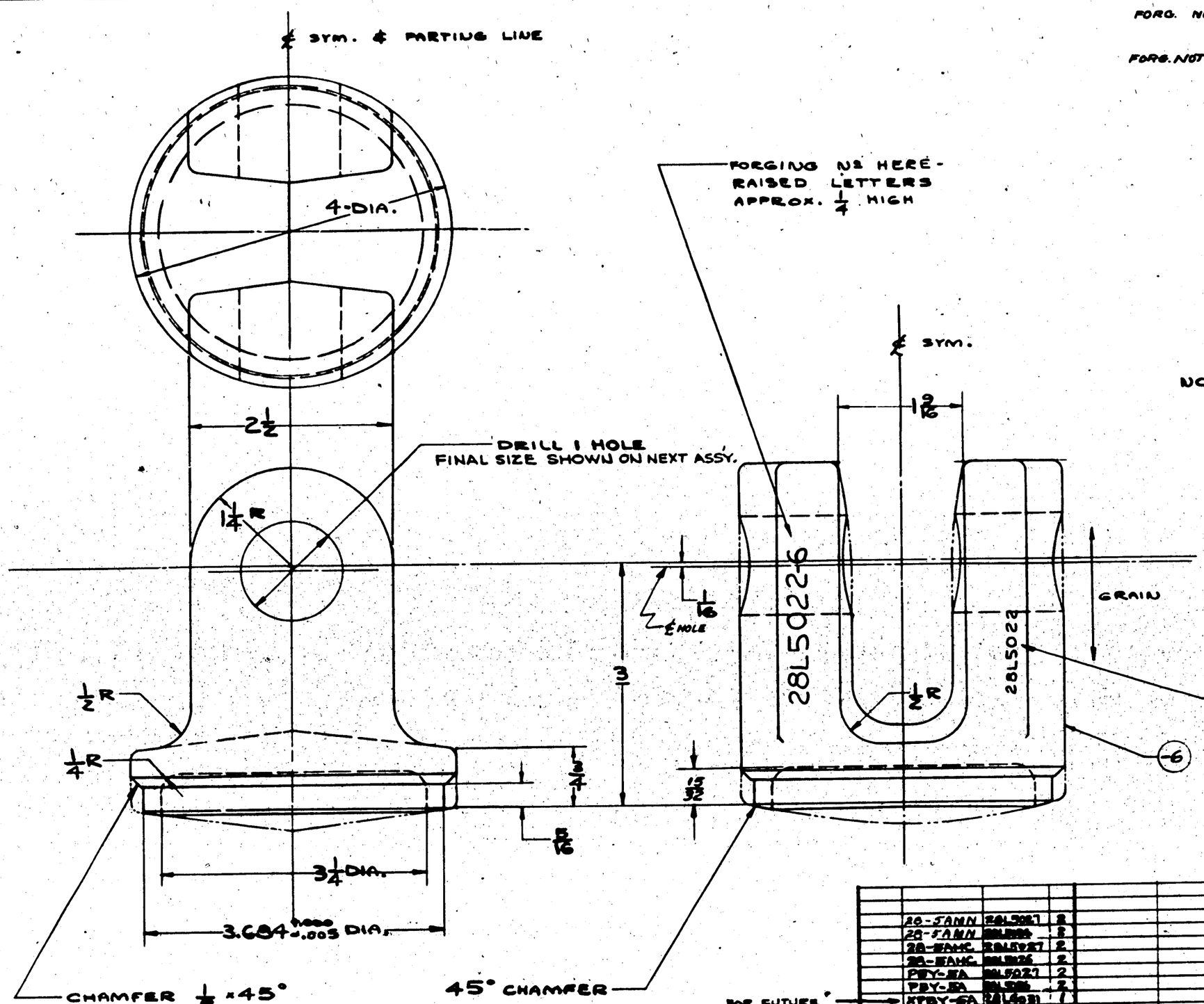

NOTES:

1) DRAFT ANGLES 7°
2) CORNER RADII 1/8
3) TOLERANCES: DIMENSIONS ± 1/32; SHIFT 1/64; MACH. ± .010
4) THIS PART TO BE H.T. AFTER WELDING AS PART OF 28L5026 & 28L5027 ASS'Y.
(5) NE 8739-SAE 4340 STEEL MAY BE USED AS © ALTERNATE FOR CHROME-MOLY. STEEL

2A-SANN	28L5027	2	
2A-SANN	28L5026	2	
2A-SAMC	28L5027	2	
2A-SAMC	28L5026	2	
PBY-5A	28L5027	2	
PBY-5A	28L5026	2	
→ XPBY-5A	28L5027	1	FOR FUTURE SPARES ONLY

ASSY. GROUP DIA.	MODEL	NEXT ASSY.	REQ.
REQUIREMENTS PER AIRPLANE			

PART NO.	STOCK	MATERIAL	SPEC.	LH REQ.	RH REQ.	LH REQ.	RH REQ.	LH REQ.	RH REQ.	LH REQ.	RH REQ.
				-0		-2		-3		-4	-5
-6	FORGING	STEEL CHR. MOLY.	X4130 AN-QQ-S-684								

PARTS LIST PER ASSY.

REPLACES — 5.9 GALS. WT.
REPLACED BY — ASY. WT.
UNLESS OTHERWISE SPECIFIED DIMENSIONS ARE IN INCHES: ± NOTED
SCALE 12" = 1'-0"
STAMP PART NUMBER WHERE SHOWN

AC
NAVY ANNEALED AS REC'D
HEAT TREAT
NONE
FINISH

6-19-42 [illegible]
DRAFT | CHECK | STRUCT | MAT | APPROV. | ENG

NAME FITTING - MAIN LAND. GEAR - MAIN STRUT
OPP. HAND
CONSOLIDATED AIRCRAFT CORP. SAN DIEGO, CALIF.
DWG D SIZE
28L5022

LET	ALTERATION	DATE	BY
A	REVISED	[illegible]	HURT
B	ADDED MFG DIM. B	6/7/41	HURT
C	ADDED 1/16 RAD. A ON END	3/14/41	HURT
D	CHANGE 1/16 R TO 1/8 R ADD. 5/32	9/11/41	HURT
E	ADDED DIM. 1/16 ± 1/32 R & 1/32 TO 1/16 R. (FORGING NOT AFFECTED) NEG WT. CHG. E.O.# A26004		
F	IN JIG DRILL NOTE .25 +.005 -.001 WAS 1/4 NO WT. CHG. E.O.# A34704	1-22-42	[illegible]
G	ADDED DIMS. 1/16, 5/16, 1/8, 15/16, 1 7/8, 5/32, 1/4, REMOVED DIMS. 1/2, 1 1/16, 1/16, 5/8, 1 1/4, 1 3/16, 1 7/32 NEG. WT. CHG. E.O. A33733A	5-16-42	[illegible]

FORGING NOT AFFECTED

THIS VIEW ONLY

IN THIS VIEW ONLY

JIG DRILL ONE .25 +.005 -.001 HOLE THRU PIECE TO MATCH 28L5045 (REF.)

FORGE PART NO. HERE
STAMP PART NO. BELOW.

REAM 1.125 +.000 -.001
CHAMFER 1/64 × 45° BOTH SIDES

1.000 +.005 -.000 AFTER H.T.

1 13/16 DIA.

55° ± 2½°

7½° ± 1°

4 17/32

1 13/32

2 3/16

1 3/32

2 3/8

1 1/4

3 3/16

4 1/2

SECT. A-A

28L5029-G
28L5029

FOR 28-3AMC

NOTES-

(1) PHANTOM LINES SHOW FORGING OUTLINE.
(2) ALL DRAFT ANGLES 7°.
(3) ALL CORNER AND FILLET RADII 1/8 UNLESS OTHERWISE NOTED.
(4) SHIFT TOL. 1/32.
(5) H.T.:- -6 ANNEAL
-6 H.T. TO 175,000 #/□" AFTER MACH.
(6) FINISH - POLISH, EXCEPT -7.
(7) BREAK ALL SHARP EDGES.

℄ SYM. ℄ PARTING LINE OF -6.

ASSY. DASH NO.	MODEL	NEXT ASSY.	QTY.
	28-5AMN	28L5004	1
	28-5AMC	28L5004	1
	PBY-5A	28L5004	1

REQUIREMENTS PER AIRPLANE

REPLACES — QTY. CALC. WT.

REPLACED BY — QTY. ACT. WT.

SCALE 12" = 1'-0"

FORGING: .010 MACH.

STAMP PART NO. AS SHOWN

PART NO.	STOCK	MATERIAL	SPEC.	LH REQ.	RH REQ.	LH REQ.	RH REQ.	LH REQ.	RH REQ.	LH REQ.	RH REQ.	LH REQ.	RH REQ.
-6	FORGING	STAIN. STEEL	M-286	1									
PARTS LIST PER ASSY.				-0		-2		-3		-4		-5	

A.C. — 4/7/40
NAVY NOTED — NOTED — T.S. — ELDRED — GREEN — 7/23/40 — 7/23/40
HEAT TREAT — FINISH — DRAFT — CHECK — STRUCT. — APPROV.

NAME LATCH-NOSE LANDING GEAR-DOWN LOCK

OPP. HAND

CONSOLIDATED AIRCRAFT CORP. SAN DIEGO, CALIF.

SIZE D — 28L5029

LET	ALTERATION	DATE	BY
A	REVISED		
B	MAT 4130 WAS WD 4135 & SPEC AN-QQ-S-685 WAS ST-105 AND WT CHG		
C	ADDED NOTE 8 NE-8735 -- STEEL" (NEG WT CHG)	9-9-42	

FORG. NOT AFT.

FORG. NOT AFT.

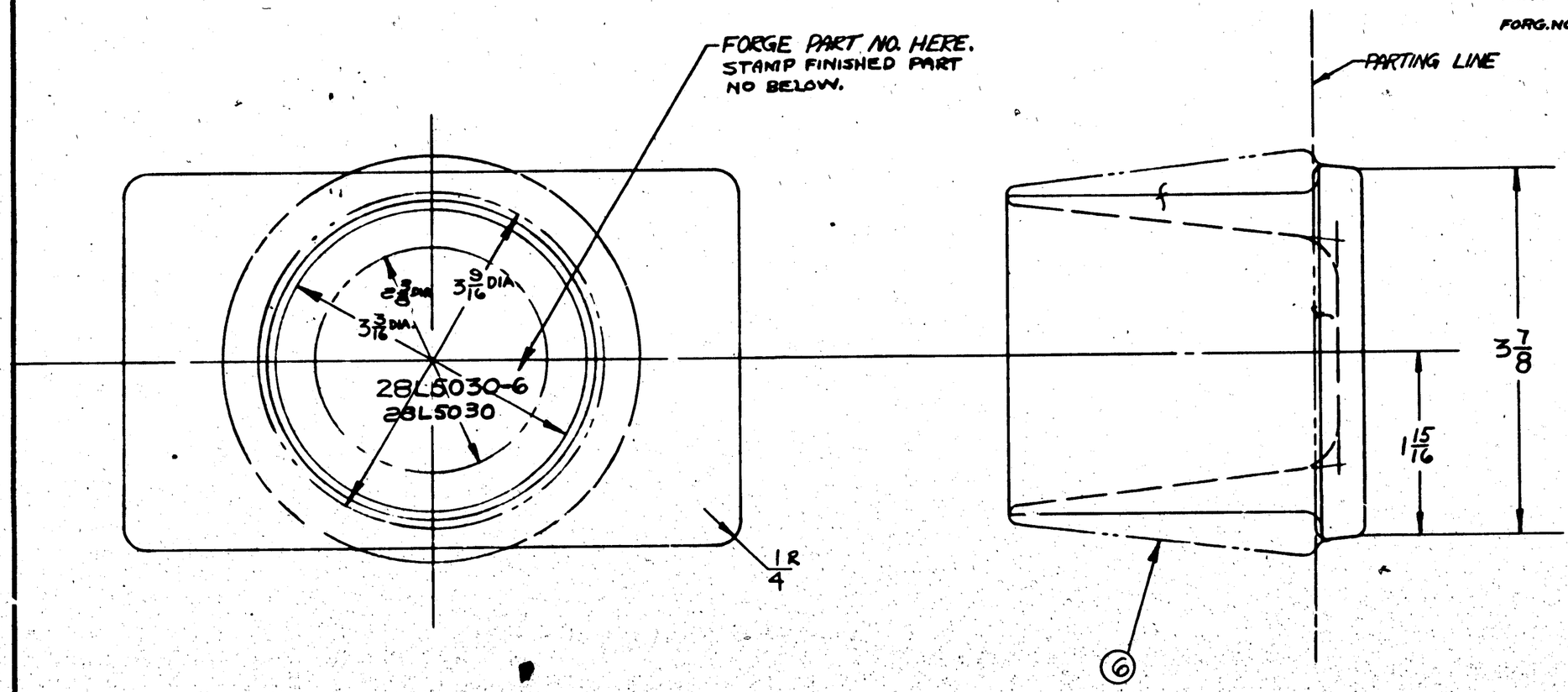

NOTES-

(1) PHANTOM LINES SHOW FORGING OUTLINE.
(2) ALL DRAFT ANGLES 7° UNLESS OTHERWISE NOTED.
(3) ALL CORNER AND FILLET RADII 1/8 UNLESS OTHERWISE NOTED.
(4) H.T. ANNEAL -6
-6 TO BE H.T. AS PART OF WELDED ASSEM.
(5) FINISH- NONE
(6) BREAK ALL SHARP EDGES.
(7) FORG. TOL: THICKNESS ± 1/32, LENGTHS +1/16 -1/32, SHIFT ± 1/32
(8) NE 8735 2739 AE4340 STEEL MAY BE USED AS ALTERNATE FOR CHROME-MOLY. STEEL.

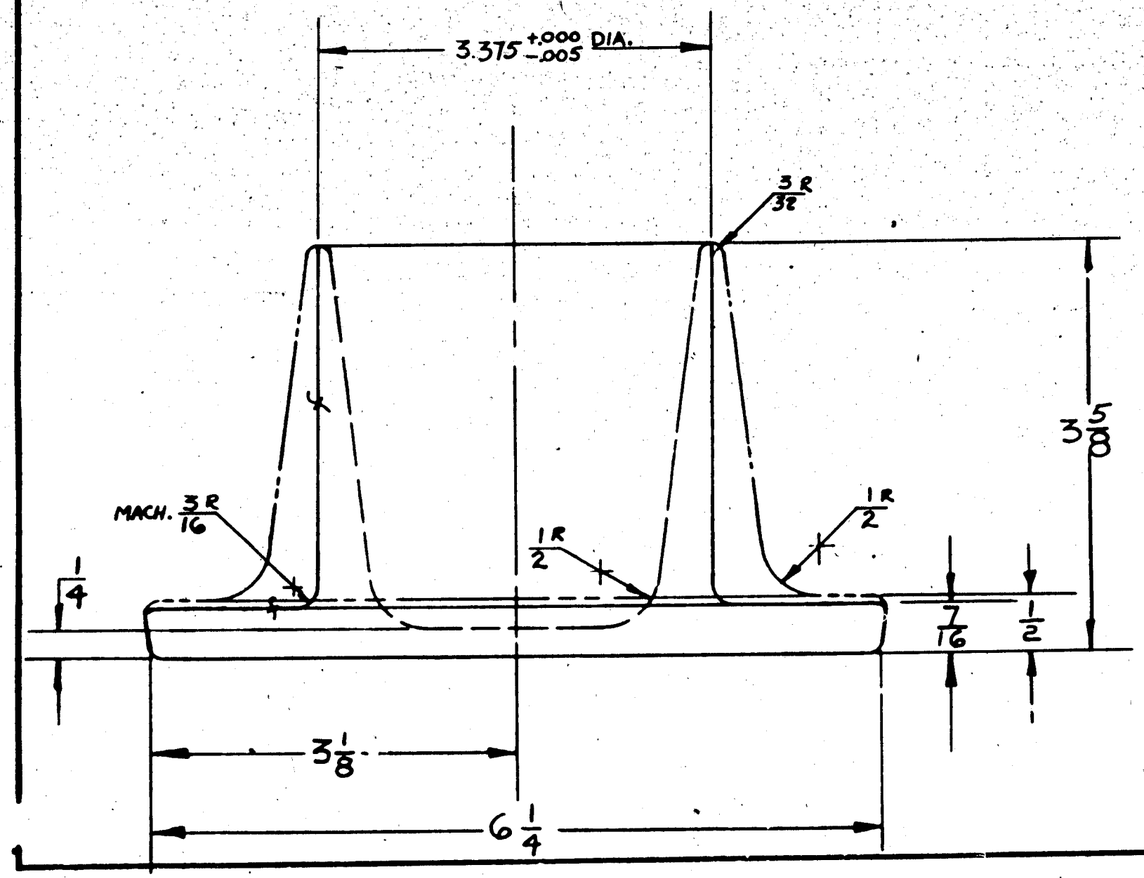

FOR FUTURE SIZES

ASSY. DASH NO.	MODEL	NEXT ASSY.	REQ'D
	28-SAHN	28L5053	2
	28-5 AHC	28L5053	2
	PBY-5A	28L5053	2
	YPBY-5A	28L4076	2

REQUIREMENTS PER AIRPLANE

REPLACES 28L4036-11 OF 4/28/39 — GALC. WT. 9.09
REPLACED BY — ACT. WT.

UNLESS OTHERWISE SPECIFIED ± 1/32 — SCALE 12" = 1'-0"

STAMP PART NUMBER WHERE SHOWN

PART No.	STOCK	MATERIAL	SPEC.	LH RH REQ.	LH RH REQ.	LH RH REQ.	LH RH REQ.	LH RH REQ.
PARTS LIST PER ASSY.				-0	-2	-3	-4	-5
-6 FORGING		SEE NOTE 8	X4130 C.M. STEEL	AN-QQ-S-685				

AC		6/17/40						
NAVY NOTED	NOTED	T.S. PLANCH						
HEAT TREAT	FINISH	DRAFT	CHECK	STRUCT.	MAT	APPROV.	ENG.	

NAME FITTING-NOSE LANDING GEAR TORQUE TUBE — OPP. HAND

CONSOLIDATED AIRCRAFT CORP. SAN DIEGO, CALIF. — DWG. SIZE D — 28L5030

R

LET	ALTERATION	DATE	BY
A	CHANGE 3 7/32 DIA. TO 3 3/4 DIA.	5-19-41	HARVEC
B	CHANGE .240 ± .005 -TO .252 ± .005	6-23-41	HORT
	ADDED "AFTER PLATING" NOTE		
C	DIAS 4.625 ± .010 & 4.875 ± .010	7-23-41	DANIELS
	WERE 4 5/8 & 4 7/8		
D	4.626 ± .010 DIA. WAS 4.625 ± .005 ADDED AFTER PLATING		
	4.876 ± .010 DIA. WAS 4.875 ± .005 ADDED AFTER PLATING		
	ADDED "NO PRIMER ON THESE SURFACES"	10-28-41	SCHULER
	ADDED MAX. TO Vers R.		
E	ADDED INSPECTION NOTE	6-18-42	PRICE

E.O. A-8948

PBY-5A E.O. A 8378
OA-10, 28-5AMC

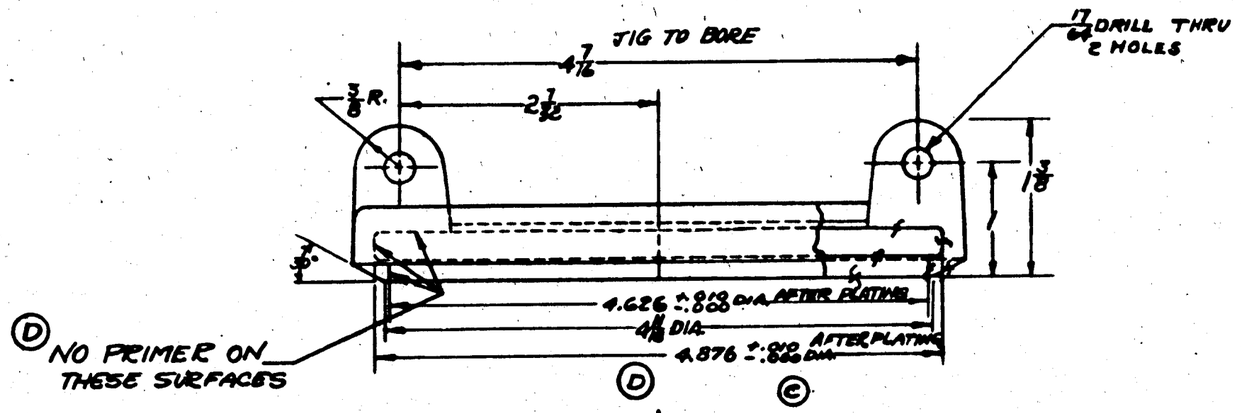

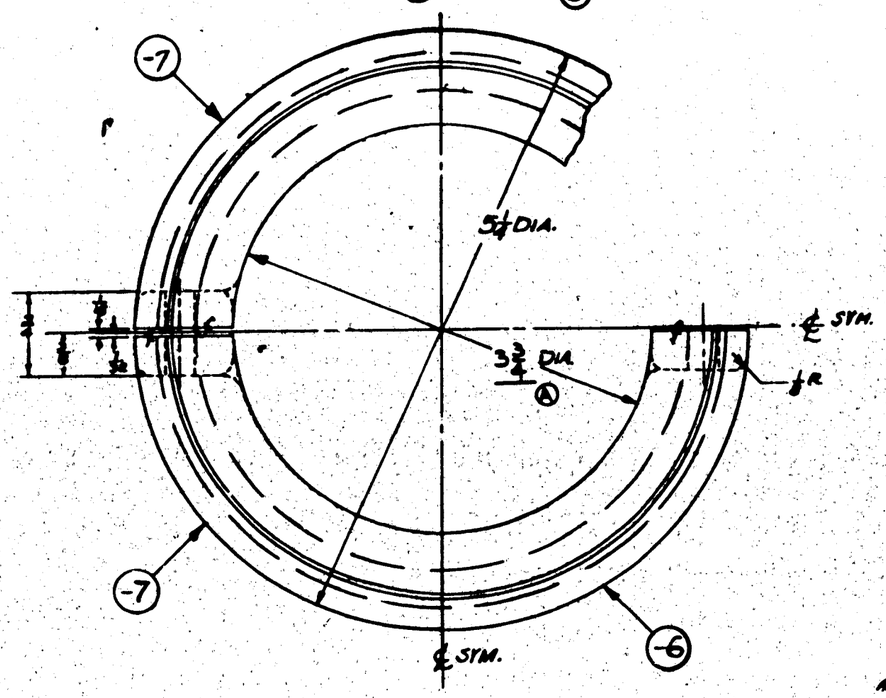

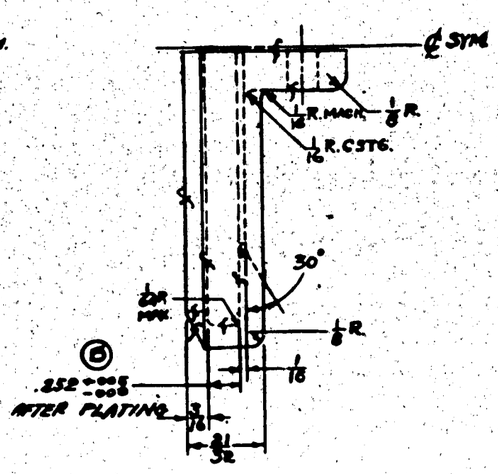

FINISH CODE	
Z	ANODIC TREATMENT
P	P-27 PRIMER
AP	ALUMINIZED PRIMER
C	CADMIUM PLATE

NOTE:
MAKE CSTG(-6) IN ONE PIECE
MACHINE AND DRILL HOLES.
CUT IN HALF TO MAKE TWO INTER-CHANGEABLE -7 PARTS.
BREAK ALL SHARP EDGES.
CLASS I INSPECTION (E)

ASSY. DASH NO.	MODEL	NEXT ASSY.	REQ.
-7	28-5AMN	28L5002	
-7	28-5AMC	28L5002	2
-7	OA-10	28L5002	2
-7	PBY-5A	28L5002	2

REQUIREMENTS PER AIRPLANE

REPLACES — CALC WT. 1.2 LBS
REPLACED BY — ACT. WT.
SCALE 12" = 1'0"
STAMP PART NUMBER WHERE SHOWN

PART NO.	STOCK	MATERIAL	SPEC.	LH REQ.	RH REQ.	LH REQ.	RH REQ.	LH REQ.	RH REQ.	LH REQ.	RH REQ.	LH REQ.	RH REQ.
	PARTS LIST PER ASSY.			-0		-2		-3		-4		-5	
-7	MAKE FROM -6			2									
-6	CASTING							SC		HP2		J.w.h.	

AC
NAVY NONE — HEAT TREAT
C-P — FINISH
6/30/40 — DRAFT
CHECK
STRUCT.
5/24/40 — MAT
5/19/40 — APPROV.
ENG.

NAME COLLAR - NOSE WHEEL - KEEL THRUST BEARING - SPLIT
CONSOLIDATED AIRCRAFT CORP. SAN DIEGO, CALIF.
OPP. HAND
DWG. SIZE D
28L5035

R

LET	ALTERATION	DATE	BY
A	REMOVED #10 HOLE – REMOVED NOTE ON DRILLING & SPOT-FACING – ADDED 1/16 DIM.	10-18-40	WARMOND
B	CORRECTED ANGLES	10-30-40	REST
C	1 3/32 WAS 1 5/64; ADDED 1/4 DIM, REMOVED NOTE, REDESIGNED TEETH TO 30° ANGLE	11-8-40	REST & SWIFT
D	35° WAS 55°	11-22-40	WARMOND
EN	.563 ± .002 DIM. WAS .750 ± .005	9-12-41	DUFFIELD
F	DRAFT ANGLES 1° WAS 10° INTERNAL 1° TO LITERAL, /EA CH CORNERS WAS 1/16 R, ALL FILL RTO 10 FORGING LIMIT, FINISH = 2P-1GP WAS 2 2P-1AL, REVISE FORGING OUTLINE & DIMS 1/8 R, 1/16 R, 1/8 R & NOTE PUNCH OUT AT ℄ OF 1/2 R", FILLED SECT A-A DIMS 3/8 R & 1/32 R; DIM 2 1/8 R WAS 2 1/16 R, 3/16 WAS 5/32 & 1/32 - 0, 3/16 WAS 5/32 & 1/32 - 0, 2 11/32 WAS 2 5/32, 4 1/16 WAS 4 1/16	9-2-42	GRAIN
	1 9/16 DRILL 1/8 WAS 1/16 NO WT. CHG		
	ADDED 28 SAMN REQTS TO B/M.		

ED A13186
PBY-5A, OA-10
& 28-5AMC

LINE REAM
.4375 +.003 -.000 — PRESS IN
Q700C10-8 BUSHINGS
WITH WET PRIMER

1/4 + 45° CHAMFER

DRILL 1/4

28L5049-6
28L5049

1R FRG'S

FORGING NO. HERE

SECTION A-A

DIRECTION OF GRAIN

3563 +.002 -.000 DIA

JIG LINE REAM -
.5625 +.001 -.000 TO MATCH
HOLE IN 28L5053 7

PUNCH OUT
AT ℄ OF 1/2 R

NOTES: —

1 ALL DRAFT ANGLES 7°
2 ALL RADII 1/4 AND 1/2 UNLESS OTHERWISE SPECIFIED. 1/8 RADII ON CORNERS
3 TOLERENCES:-
SHIFT: ± 1/64
FORGING: ± 1/32 (NOTED ℄ ± 1°
(MACH.: ± .010 (NOTED
(ANGLES: ± 1/4°
4 BREAK ALL SHARP EDGES

FINISH CODE	
GP	GREEN PRIME
Z	AN-C-20
P	P-27
AP	ALUMINUM
C	CAD

FB-5AMN	28L5004	1	Q700C10-8
CB-5AMC	28L5004	1	
A-10	28L5004	1	
PBY-5A	28L5004	1	

DASH NO.	MODEL	NEXT ASSY	NO

REQUIREMENTS PER AIRPLANE

REPLACES .75# CALC WT
REPLACED BY CALC WT

NOTED — SCALE 12" = 1'-0"

STAMP PART NUMBER WHERE SHOWN

6 FORGING — ALCOA 145T, M-277

PART NO	STOCK	MATERIAL	SPEC	REQ -0	REQ -2	REQ -3	REQ -4	REQ -5

PARTS LIST PER ASSY

A.C. NAVY AS PER SPEC. — HEAT TREAT
Z-2P-1GP — FINISH
H 21-40 — HURT ELDRED GREEN 9/27/40 9/27/40 — DRAFT CHECK STRUCT MA ENG
J.H.Z.U.M.S

NAME ARM-NOSE LAND'G GEAR-RETRACT'G-TORQUE
OPP HAND
DWG D
28L5049

CONSOLIDATED AIRCRAFT CORP. SAN DIEGO CALIF

LET	ALTERATION	DATE	BY
A	-7 DASH NO LONGER REQ'D. MACHINED FORGING NOW STD.	11/42	GRAY
B	ADDED NOTE (2) WAS AL ALLOY 164 ST. SPEC. M-277, H.T. "AS PER SPEC." FINISH Z-P-2AL (WT. 3.03 WAS 3.03)	6-10-42	(ILLEGIBLE)
C	ADD. NOTE "3. ALTERNATE ....C-P-2GP." NO WT. CHG.	10-19-42	WATSON
D	TO FACE OF DWG. ADDED NOTE "#4 "ALT. MAT'L. - - - - - C-P-2GP." (WT. CHG NEG.)	2-20-43	NODIE
E	28L5151 WAS Q 700 C 12-2GP. ADDED DIM. .9375±.002. 3.125±.002 WAS 3.125±.010. 1.875±.002 WAS 1.875±.005. NO WT. CHG.	8-29-43	BARTON

TAP $\frac{1}{4}$-28 NF-3 THRU WALL OF -7

$\frac{1}{2}$ DIA

$\frac{7}{16}$R

$\frac{1}{8}$R

$\frac{5}{16}$

$\frac{1}{16}$

$\frac{3}{16}$R

$\frac{13}{16}$

$\frac{3}{8}$

$\frac{3}{32}$ DESIRABLE GRAIN

$\frac{3}{16}$

7

$1\frac{7}{32}$

$\frac{7}{8}$

$\frac{1}{16}$

$\frac{7}{16}$R

PARTING LINE

$\frac{1}{8}$R

$2\frac{1}{16}$

$1\frac{1}{32}$

$1.875^{+.002}_{-.005}$

ALEMITE #1641 LUBRICATOR

E.O. A31551A FORGING NOT AFFECTED

E.O. A58108

$\frac{1}{8}$R

Ⓔ

$\frac{1}{8}$R. FORG.

REAM .500±.889 28L5151

C.R. 09X255-

Ⓔ PRESS IN WITH WET PRIMER

$\frac{5}{8}$

$2\frac{3}{8}$

$1\frac{23}{32}$

$\frac{13}{16}$

$\frac{1}{8}$R

A

A

$\frac{1}{2}$R

$\frac{3}{4}$R

SYM.

$\frac{1}{4}$

28L5055-6

28L5055

$\frac{1}{2}$R

STAMP PART NO. HERE

FORGING NO. HERE

$\frac{1}{2}$R

$\frac{5}{16}$R. FORG

$\frac{1}{16}$R MACH

$\frac{5}{8}$

$\frac{1}{16}$

LINEAR AMOUNT .001 .625 28L5151 PRESS IN WET PRIMER

Ⓔ

$\frac{5}{8}$R. FORG

$1\frac{5}{16}$

$2\frac{15}{16}$

$1\frac{9}{16}$

Ⓐ

$\frac{3}{4}$

$3.125^{+.002}$

$\frac{5}{8}$

$4\frac{13}{16}$

$\frac{3}{16}$R

$\frac{1}{16}$R

SEC. A-A

Ⓐ -7 -6

NOTES

1. DRAFT ANGLES 7°
FORGING LIMITS ± 1/32; MAX DIE SHIFT 1/32.
MACHINE LIMITS ± .010 UNLESS NOTED
BREAK ALL EDGES.

2. CHROME MOLY STEEL-SPEC. AN-QQ-S684. HEAT TREAT 170,000 TO 190,000 #/a & FINISH C-P-2 GP, OR — FOR FUTURE SPARES
Ⓑ

3. ALTERNATE MATERIAL X-4340 CHROME-MOLY. STEEL-SPEC. AN-QQ-S-756-HEAT TREAT 170,000 TO 190,000 #/a - FINISH C-P-2GP, OR
Ⓒ

Ⓓ 4. ALTERNATE MATERIAL MAYBE SAE. 4140, SPEC. AN-QQ-S-752 -H.T. 170,000 TO 190,000 #/a"; FINISH C-P-2GP.

FINISH

Z	ANODIC T...
P	P-27 PRIMER
AP	ALUMINIZE PRIMER
C	CADMIUM ...

ASSY DASH NO.	MODEL	NEXT ASSY	REQ
28-5AM4	28L5002		1
28-5AM6	28L5002		1
PBY-5A	28L5002		1
PBV-5A	28L4002		1

REQUIREMENTS PER AIRPLANE

REPLACES 28L4104 DE 3.03

3/11/43 — DISPLACED BY — CALC BY — ACT WT

NOTED — SCALE 1"=1'-0"

STAMP PART NUMBER WHERE SHOWN

ALEMITE #1641 LUBRICATOR

28L5151

28L5055-7 MACHINED FORGING

6 FORGING — NOTED — NOTED — 1

PART NO	STOCK	MATERIAL	SPEC	WEIGHT	REQ	REQ	REQ	REQ
PARTS LIST PER ASSY					-0	-2	-3	-4	-5

A.C. — NAV — NOTED — NOTED — Crowe Edwards 8/4/43 — Dorman 8/4/43 — Wm

HEAT TREAT — FINISH — DRAFT — WELD DTD — MAT — APPROVED — ENG

NAME SCISSORS-NOSE L.G. UPPER

CONSOLIDATED AIRCRAFT CORP SAN DIEGO CALIF

USED ON — DWG D 28L5055 — SIZE D

ENG. FILE

LET	ALTERATION	DATE	BY
A	ADDED 3/16, 3/16 & 37/64 DIMENSIONS; 1/8 R WAS 1/2 R ADDED REQ. FOR 28-5AM & 20-10	12-3-42	CW TURNER
B	ADDED NOTE (2) W/AS AL. ALLOY 14-ST. SPEC M-277, HT AS PER SPEC" FINISH Z-P-2 AL (WT. 3.3 WAS 1.1)	6-16-43	A.J. ROGERS
C	ADDED NOTE #3. NO WT. CHG	10-19-43	J.E. PEPSER
D	TO FACE OF DWG. ADDED NOTE #4 "ALT. MAT'L ---- C-P-26P (MACHINED) & KQ-43. NO WT CHG		
E	ADDED -7 FOR MACH. FORGING. REVISED NOTE; ROUGH - - MACH. FORGING." NO WT CHG	7-17-43	[illegible]
F	DIMS. 2.125 ±.002 WAS 2.125 ±.008, 3.125 ±.002 WAS 3.125 ±.018, 28L5151 WAS Q700C12 24. No WT. CHG	9-29-43	GOTHAM

PAY-5A
20-5AMC
0A-10

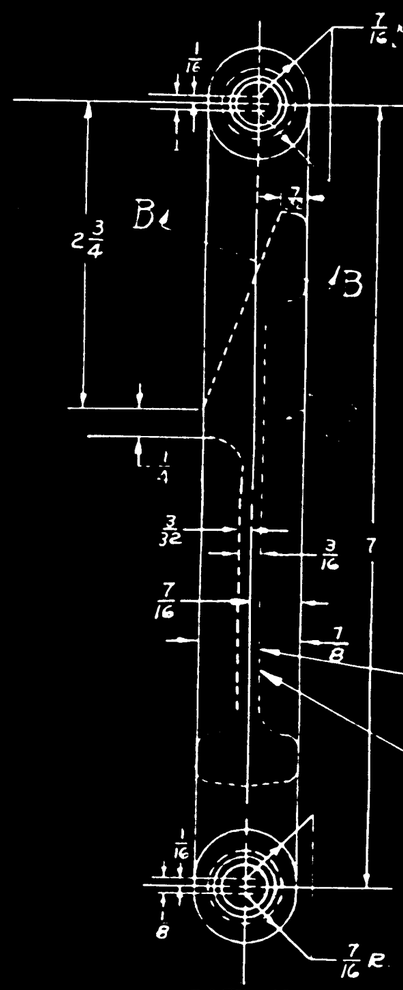

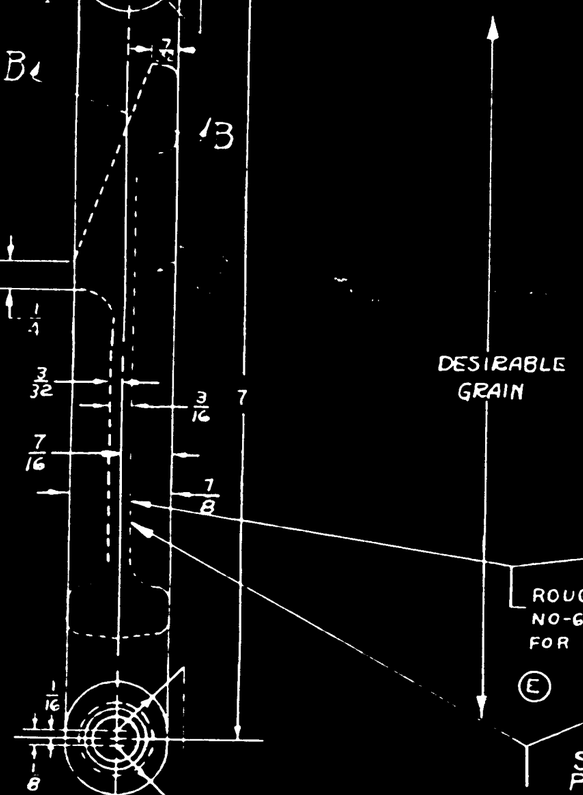

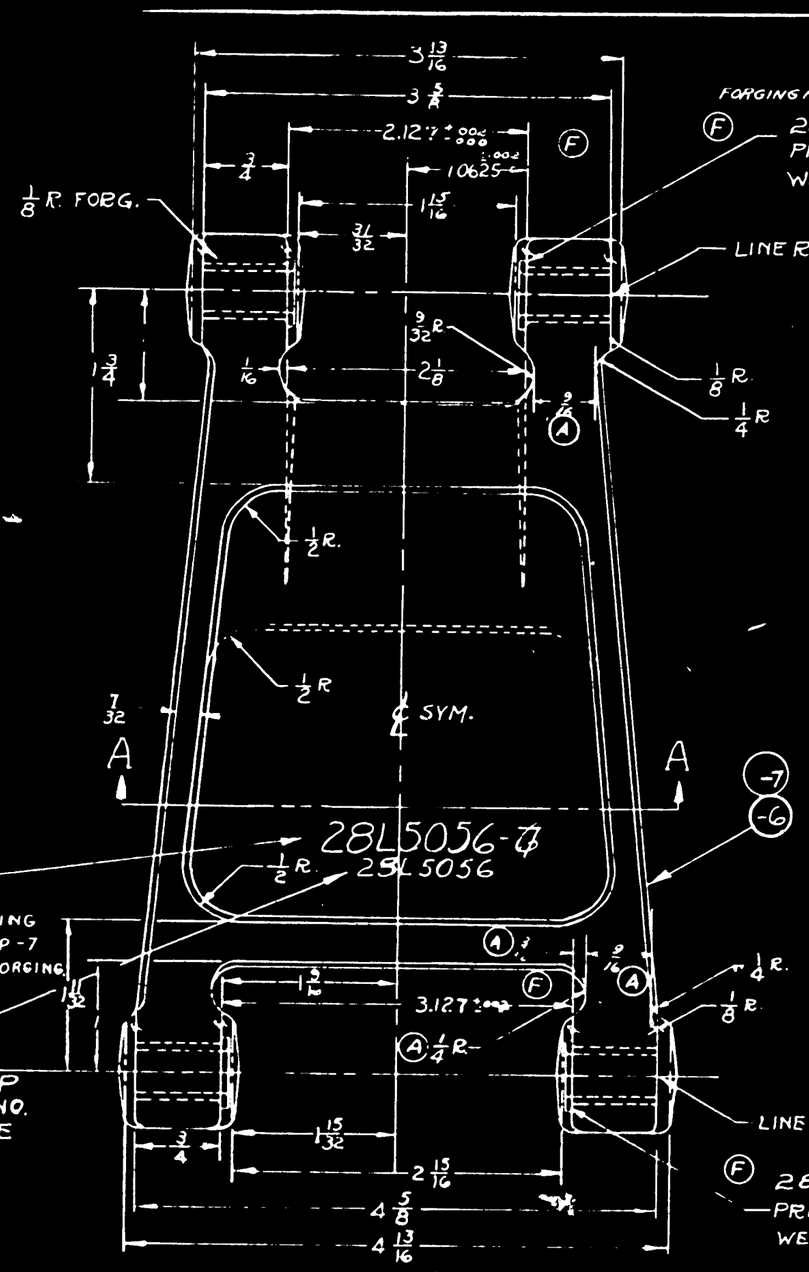

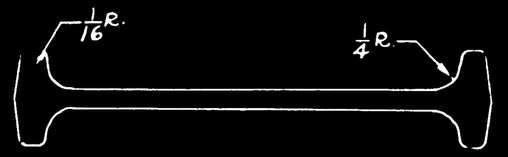

SECTION A-A

SECTION B-B

—NOTES—

1. DRAFT ANGLES 7°
   FORGING LIMITS ±1/32; MAX. DIE SHIFT 1/32
   MACHINE LIMITS ±.010 UNLESS NOTED
   BREAK ALL EDGES
2. CHROME MOLY STEEL - SPEC AN-QQ-5684 - HEAT TREAT 170,000 TO 190,000 #/□" - FINISH C-P-2GP, OR (B)
3. (C) ALTERNATE MATERIAL X4340 CHROME-MOLY STEEL ~ SPEC AN-QQ-5-756 ~ HT 170,000 TO 190,000 #/□" ~ FINISH C-P-2GP, OR
4. (D) ALTERNATE MATERIAL MAYBE S.A.E. 4140, SPEC. AN-QQ-S-752 - H.T 170,000 TO 190,000 #/□", FINISH C-P-2GP.

FUTURE SPARES

28-5 IN 28L5002
20-5 IC 28L5002
PD SA 28L5002
XPD1 R 28L4002

REQUIREMENTS PER AIRPLANE

28L4105 (D) OF 3/4 3.3 #

NOTED 12"=1'0"

STAMP PART NUMBER WHERE SHOWN

28L5151

-7 MACH FORGING

PART NO.	QTY	MATERIAL	SIZE	REQ -0	REQ -2	REQ -3	REQ -4	REQ -5
FORGING		NOTED	NOTED					

PARTS LIST PER ASSY

8-23-40 ELDRED

NOTED NOTED

CROWN GREEN 9/4/40 9/4/40

FINISH

NAME SCISSORS-NOSE LANDING GEAR-LOWER

CONSOLIDATED AIRCRAFT CORP. SAN DIEGO CALIF.

OPP HAND

DWG D 28L5056

28L5056 A

LET	ALTERATION	DATE	BY
A	MTIF ASSY WAS 28L7068	4/6/44	[illegible]
	1/4-28 & 1/4 NPTF (3B) WAS 1/4-28 & 1/4 NPT	10-6-44	Almer
	1/8 R WAS 1/8 R & ADDED 1/8 R		
C	5/32 DIA WAS 5/32 +.015 -.000	11/10/44	[illegible]
D	MAT X4130 WAS W.D. 4130 & SPEC AN-QQ-S-685 WAS ST. 105 NO WIDTH OF [illegible]	[illegible]	[illegible]

E.O. 94-4499

FORG. NOT AFC

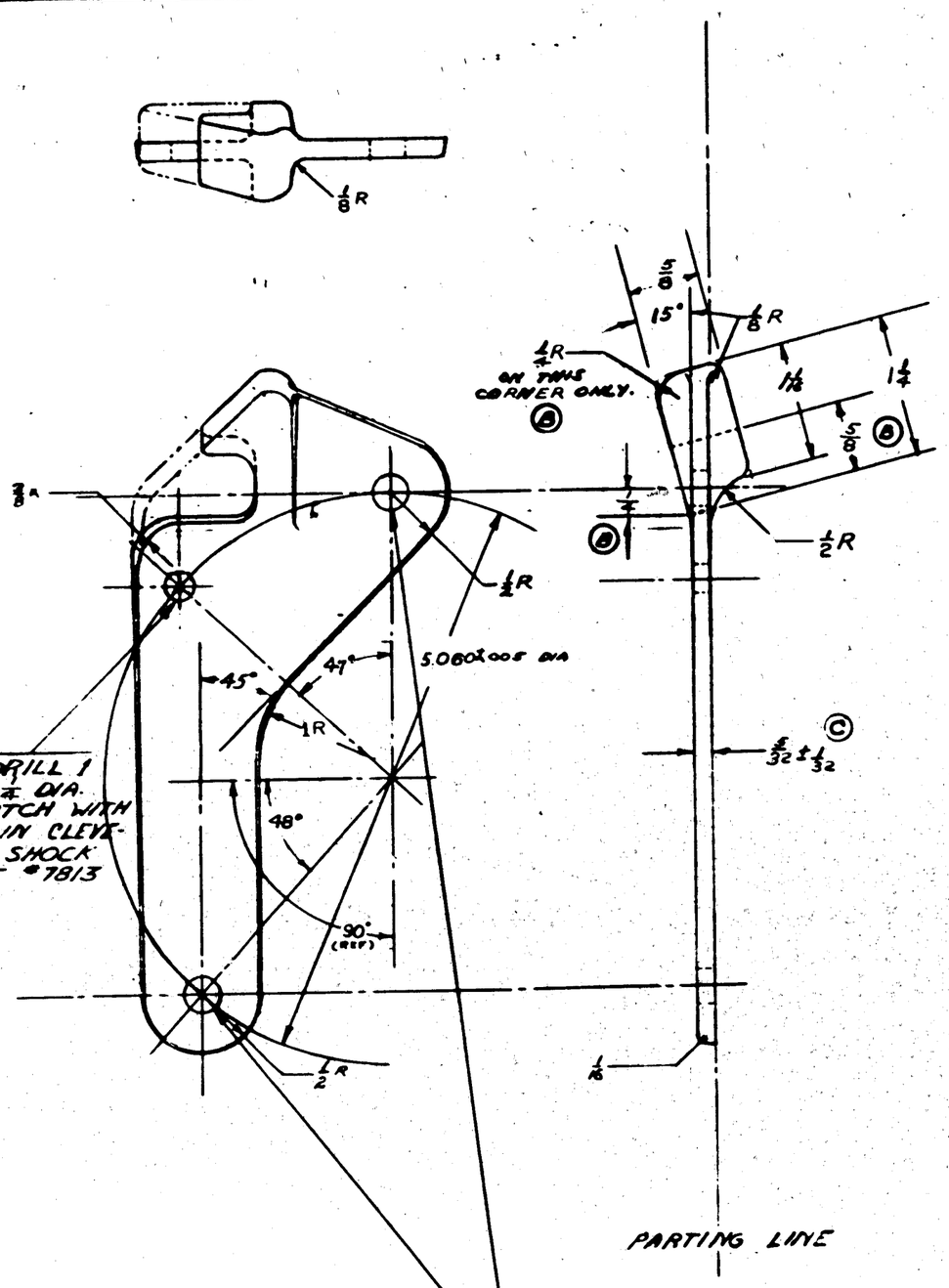

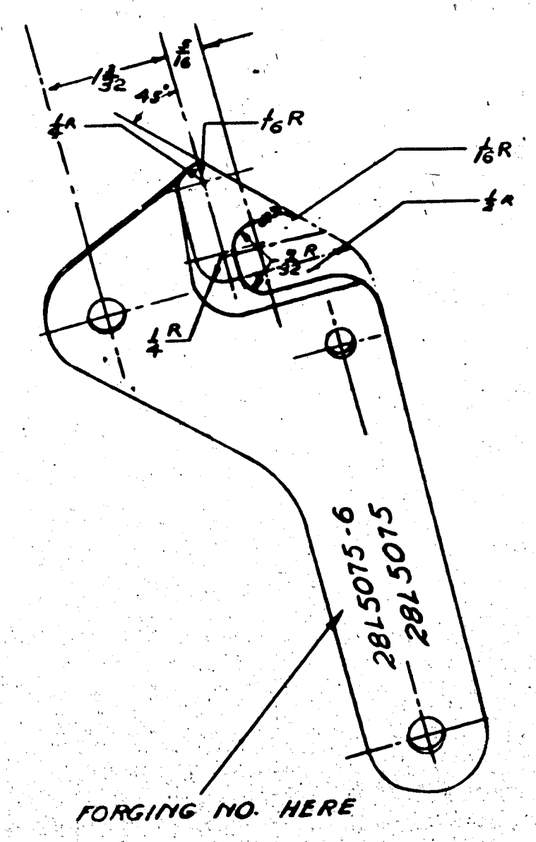

NOTES-
1. ALL DRAFT ANGLES 7°
2. TOLERANCES
   SHIFT - 1/64
   FORGING - 1/32
   MACH. - .010
3. TO BE ANNEALED BY VENDOR - 175000 P.S.I. H.T. BEFORE FINISH MACH.

FINISH CODE	
Z	ANODIC TREATMENT
P	P-27 PRIMER
AP	ALUMINIZED PRIMER
C	CADMIUM PLATE

ASSY. DASH NO.	MODEL	NEXT ASSY	QUAN.
	28-5AMN	28L5002	1
	28-5AMC	28L5002	1
	PBY-5A	28L5002	1

REQUIREMENTS PER AIRPLANE

REPLACES — CALC WT.

REPLACED BY — ACT WT.

SCALE 12"=1'-3"

+ NOTED

STAMP PART NUMBER WHERE SHOWN

PART NO.	STOCK	MATERIAL	SPEC.	LH REQ.	RH REQ.	LH REQ.	RH REQ.	LH REQ.	RH REQ.	LH REQ.	RH REQ.	LH REQ.	RH REQ.
-1	FORGING	CAR. STEEL	X4130 AN-QQ-S-685										
				-0		-2		-3		-4		-5	

PARTS LIST PER ASSY.

AC

NAVY NOTED — HEAT TREAT

C-2P- — FINISH

9-13-44 — DRAFT — Hart

CHECK — Ellwood

STRUCT. — Ryan

MAT — Ryan

APPROV. — Ryan

ENG. — JWL

NAME HOOK - NOSE L.D.G. GEAR-UP LOCK

OPP. HAND

SIZE D

28L5075-1

CONSOLIDATED AIRCRAFT CORP. SAN DIEGO, CALIF.

LET	ALTERATION	DATE	BY
A	DIM. .997 +.003 -.000 WAS .996 ± .001	3-14-41	DOUGLAS
B	DIM. .977 +.003 -.000 WAS .997 +.000 -.003	8-8-41	WHEELDON

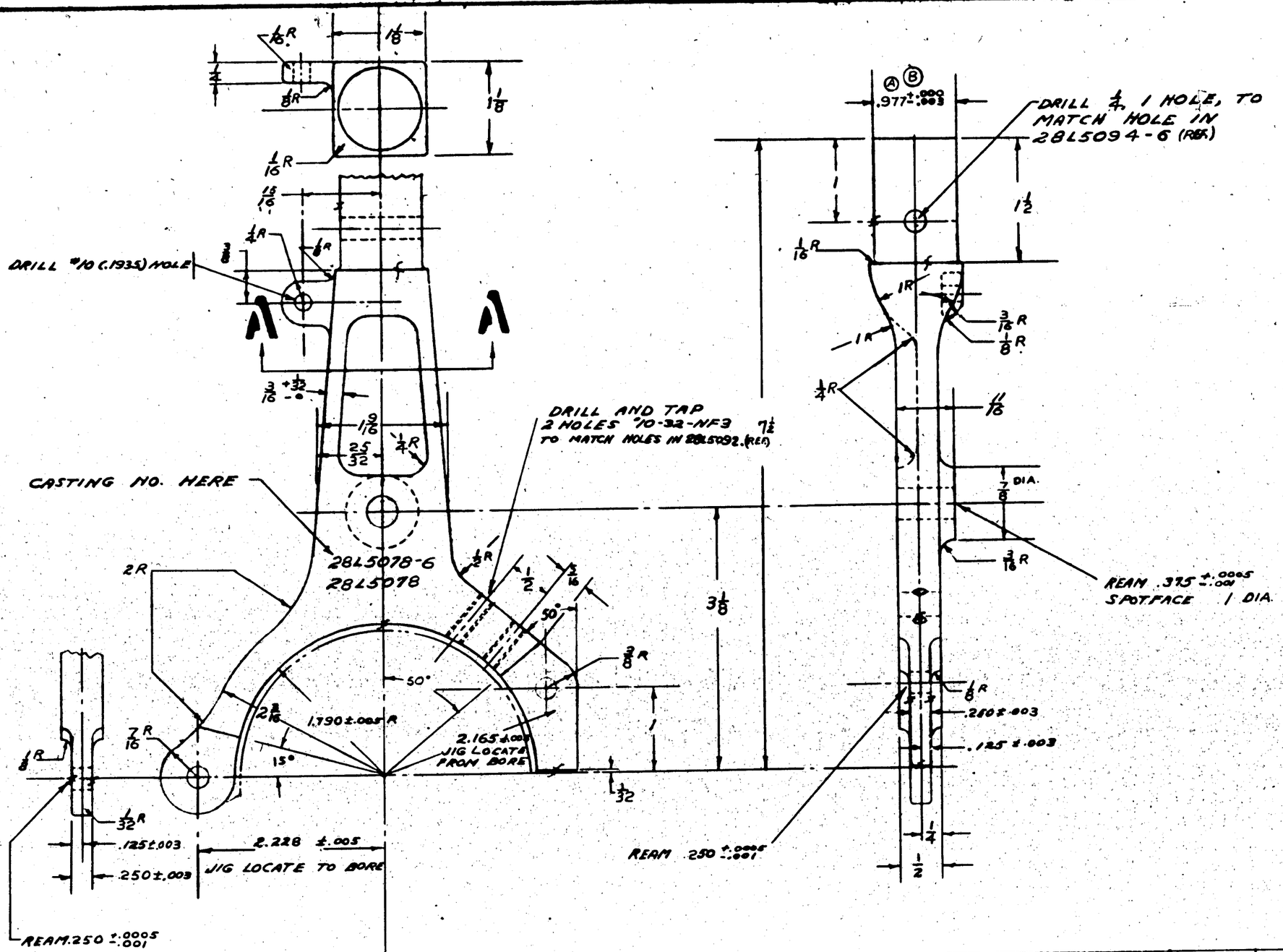

NOTES +
1. TOLERANCES - CAST. $+\frac{1}{16}$ $-\frac{0}{4}$ MACH. ± .010 ANGLES ± 4
2. BREAK ALL SHARP EDGES.
3. DISC GRIND, IF NECESSARY, TO MAKE SURFACES SMOOTH.
SPEC.- MAT'L. TO CONFORM TO 4951 NAVY SPEC. EXCEPT MAT'L. TO BE C. M. STEEL OF ULT. TENS. STRENGTH OF 100,000 #/□" MIN.
5. FILE OR GRIND, IF NECESSARY, TO SMOOTH UP CASTING.

FINISH CODE	
Z	ANODIC TREATMENT
P	P-57 PRIMER
AP	ALUMINIZED PRIMER
C	CADMIUM PLATE

ASSY. DASH No.	MODEL	NEXT ASSY	QTY
	PBY-5A	28L5096	1
	28-5-AMC	28L5096	1
	OAN-1	28L5096	1
	XPBY5A	28L5096	1

REQUIREMENTS PER AIRPLANE

REPLACES 1.15A CALC WT.

REPLACED BY ACT WT

LIGHT ON DIMENSIONS UNLESS OTHERWISE SPECIFIED: ± NOTED

SCALE 12"=1'-0"

STAMP PART NUMBER WHERE SHOWN

PART No	STOCK	MATERIAL	SPEC.	LH REQ.	RH REQ.	LH REQ.	RH REQ.	LH REQ.	RH REQ.	LH REQ.	RH REQ.	LH REQ.	RH REQ.
-6	CASTING	C.M. STL.	NOTED	-0		-2		-3		-4		-8	

PARTS LIST PER ASSY.

AC		NOT GD						
NAVY NOTED	C-P	HGT	CHECK	STRUCT.	MAT	APPROV.	ENG	
HEAT TREAT	FINISH	DRAFT	JWL					

NAME ATTACHMENT - N.L.G. - EMERG. LOWERING LEVER

OPP. HAND

CONSOLIDATED AIRCRAFT CORP. San Diego, Calif.

DWG. SIZE D

28L5078

LET	ALTERATION	DATE	BY
A	AN316-5R WAS AN316-5L	12-3-40	[illegible]
B	RETAINER AND CYLINDER ARE CALLED OUT AS 28L5082	4-17-41	[illegible]
C	[illegible]	7-30-41	[illegible]
	ADDED -6 DETAIL		
D	CALLED FOR 3/16 DIA. CROSS DRILLED HOLE	12-15-41	[illegible]
	STRAIGHTENED & REAMED 3/16 HOLE		
E	ADDED AN960-616 TO 3 PLACES	3-[illegible]-42	[illegible]
	PLACED AN931-616 WITH AC365-624		
F	IN LIEU AN486-1 WAS AN		
	481-1 - NRQ. WT. CHG.	[illegible]	[illegible]

FINISH CODE

Z	ANODIC TREATMENT
P	P-27 PRIMER
AP	ALUMINIZED PRIMER
C	CADMIUM PLATE

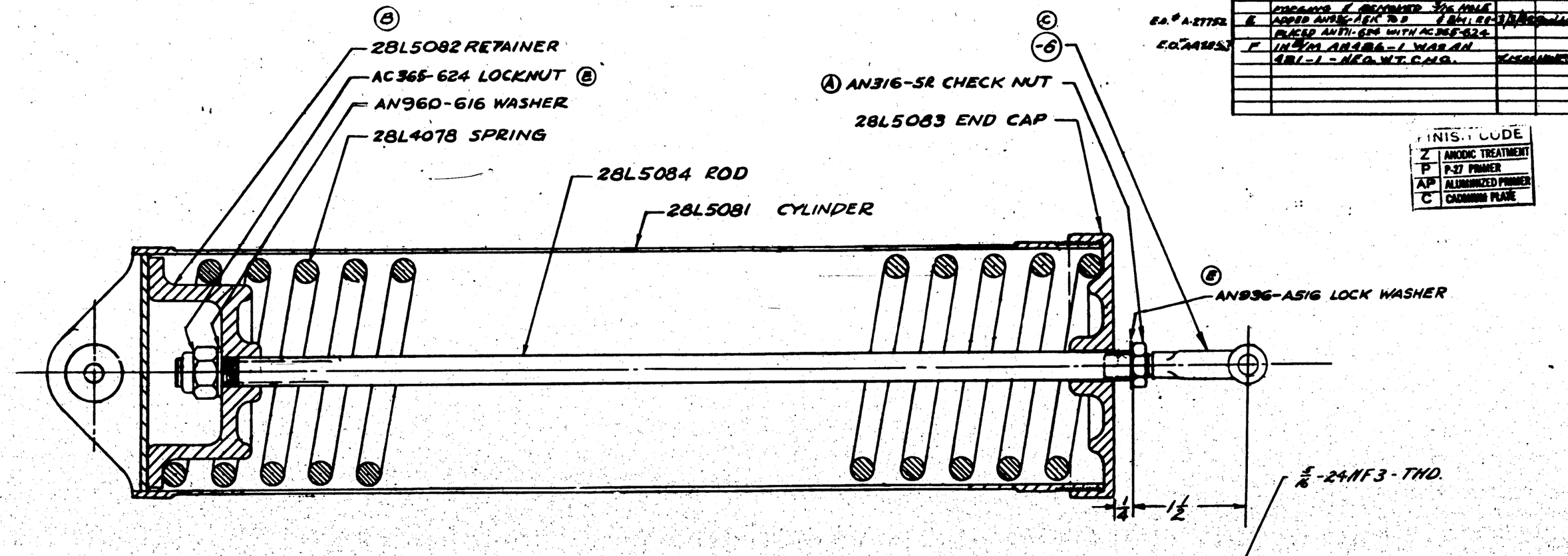

FINISH NOTE:

1. P-1AL (OUTSIDE ONLY; NO PAINT ON THDS.) COAT ALL INTERNAL PARTS THOROUGHLY WITH PARALKETONE.
(C) 2. FINISH -6 (REF.) C-P AFTER MACH.

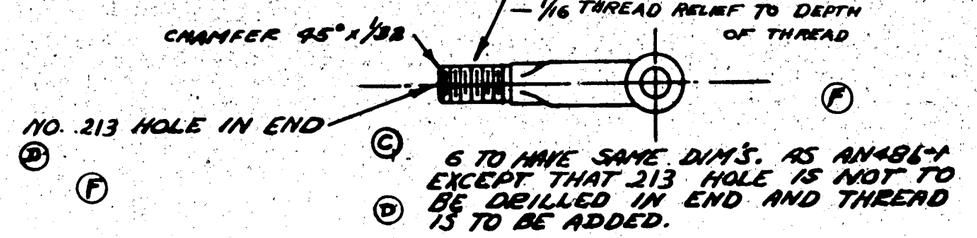

-6 TO HAVE SAME DIM'S. AS AN486-1 EXCEPT THAT .213 HOLE IS NOT TO BE DRILLED IN END AND THREAD IS TO BE ADDED.

DETAIL OF -6

PART No (C)	STOCK	MATERIAL	(D) SPEC.	LH REQ. -0	RH REQ. -2	LH REQ. -3	RH REQ. -4	LH REQ. -5	RH REQ.
			AN936-A516	1					
			AN960-616	1					
			AC365-624	1					
28-5AMN	28L5003-1	2	AN316-5R	1					
28-5AMC	28L5003-4	2	28L5084	1					
PBY-5A	28L5003	2	28L5083	1					
			28L5082	1					
			28L5081	1					
			28L4078	1					
(B)	MAKE FROM AN486-1 BLANK FORGING			1					

PARTS LIST PER ASSY.

ASSY. DASH NO. | MODEL | NEXT ASSY. | REQ'D

REQUIREMENTS PER AIRPLANE

REPLACES | REPLACED BY | CALC. WT. 4.15 | ACT. WT.

LIST OF SUBASSEMBLIES SHIPPED: X | SCALE 12" = 1'-0"

STAMP PART NUMBER WHERE SHOWN

AC | NAVY NONE | HEAT TREAT | NOTED | FINISH

10-11-40 | DRAFT | CHECK | STRUCT. | STAT. | APPROV. | ENG.

NAME ASSEMBLY - M.L.G. - BUMPER SPRING

CONSOLIDATED AIRCRAFT CORP. SAN DIEGO, CALIF.

ORD. HAND

SIZE D | DWG. 28L5085

LET	ALTERATION	DATE	BY
G	TRACED. NO WT. CHG.	10-18-[illegible]	[illegible]

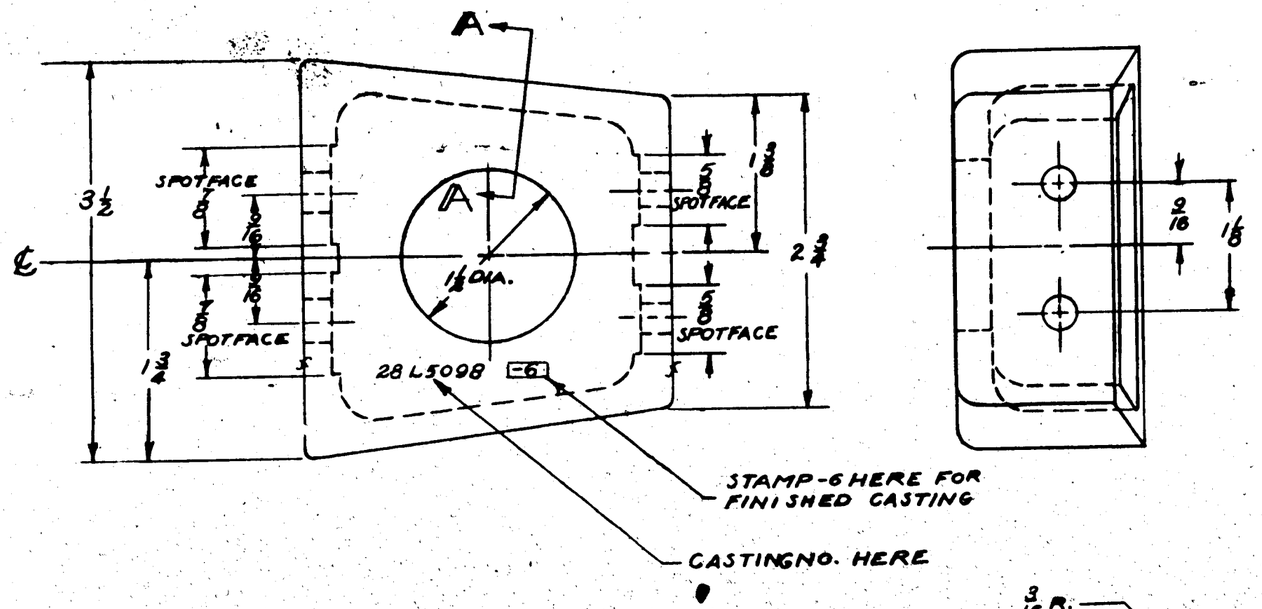

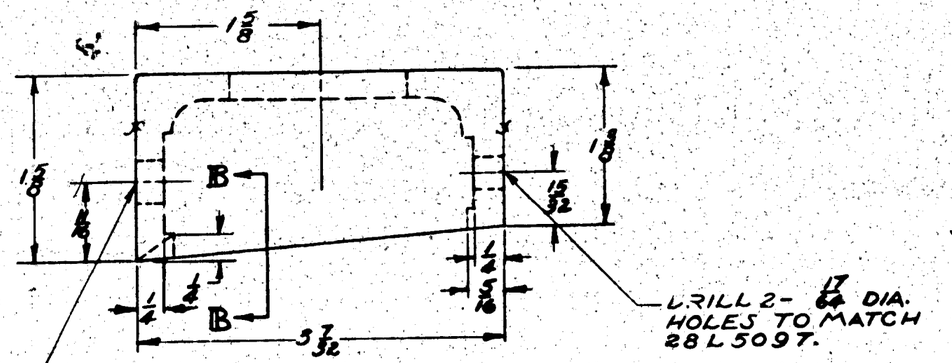

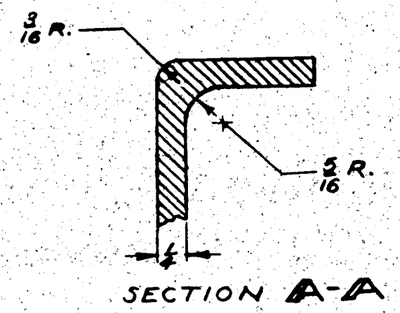

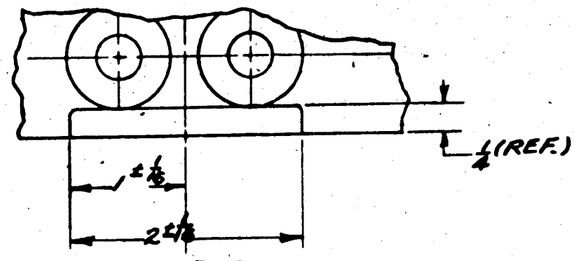

FINISH CODE	
Z	ANODIC TREATMENT
P	P-27 PRIMER
GP	GREEN PRIMER
C	CADMIUM PLATE

MATERIAL FOR -6 MAY BE-
(A) 195 T4 AL. AL. CASTING, SPEC. AN-QQ-A-390 CL. I, T.S. 29,000 P.S.I., OR
(B) 195 T6 AL. AL. CASTING, SPEC. AN-A-5 CL. II, T.S. 32,000 P.S.I.

TOLERANCE:
CASTING - ± 1/32
MACHINE - ± .010

NOTE:
OUTSIDE RADIUS 3/16
INSIDE RADIUS 5/16

ASSY. DASH NO.	MODEL	NEXT ASSY.	QTY.
-6	A8Y-5A	28L3004	1
-6	28-5AMN	28L3004	1
-6	28-5AMC	28L3004	1

REQUIREMENTS PER AIRPLANE

REPLACES 28L5098 M-7-40	.46 ENG. WT.	
REPLACED BY	ASY. WT.	
LAST ON ENGINEERING UNLESS OTHERWISE SPECIFIED: NOTED	SCALE 12" = 1'0"	

PART NO.	STOCK	MATERIAL	SPEC.	LH REQ.	RH REQ.	LH REQ.	RH REQ.	LH REQ.	RH REQ.	LH REQ.	RH REQ.	LH REQ.	RH REQ.
PARTS LIST PER ASSY.				-0	-2	-3	-4	-5					
-6	MACH. CASTING	MADE FROM	28L5098										
-6	CASTING	NOTED	NOTED										

AC		M-7-40	[illegible]	[illegible]	[illegible] 10-11-44	[illegible] 11-14-40	[illegible]	[illegible]
NAVY NOTED	Z-2P-GP	DRAWING						
HEAT TREAT	FINISH	DRAFT	CHECK	STRUCT	MAT	APPROV	ENG.	

NAME BUMPER-NOSE LAND. GEAR - STRUT DOWN
[illegible] AIRCRAFT CORP. [illegible]

OPP. HAND

SIZE D

28L5098

8605782

LET	ALTERATION	DATE	BY
A	ADDED #1220 LOCKWASHER	7-14-41	NOW
B	ADDED -7 (NOTE 2) TO BE --- (illegible)	(illegible)	(illegible)
C	ADDED TO FACE NOTE #2 AT -6		
	ADDED "SEE NOTE #2"; NO WT CHG.	3-16-43	(illegible)
D	AC566-C6-6 (2 PLACES), SET SCREW, AN936-A6 (2 PLACES) WASHER, (AN960-616 (2 PLACES) NUT & WAS "AC566-C6-6 (2 PLACES) SET SCREW, DRILL --- WITH AC936-516-4" REPLACED DIM 11 13/32 & VIEW OF LOCKWIRE WITH WASHER & NUT AC936-416-4 (1 REQ) WAS (2 REQ.) ADDED AN936-A6 (2 REQ) & AN340-6 (2 REQ). WT. CHG. NEG.		

A 4695
E.O. "A23333"

GARLOCK KLOZURE #6-PRESS IN WITH WET PRIMER WITH SEALING LIP OUTBOARD.- METAL CASING OF KLOZURE TO BE CADMIUM PLATED LUBRICATE KLOZURE WITH LIGHT GREASE BEFORE ASSEMBLY & INSTALL.

AN936-A6
AN340-6

PBY-5A
#94 & ON
C.00170

VIEW A-A

28L5111-SPRING

5 19/32 (APPROX.)

28B5519-7 (REF)

AN3-7A BOLT (4 PLACES)
BOOTS NUT-SCOVILL
CAT NO. 96B9067
AN960-A10 (8 PLACES)
(SEE 28B5523 (REF)).

3/32 CLEARANCE

28L5110-YOKE

AN960-C516
AN316-5R

℄ SHIP (REF.)

28L5119-UPLATCH (REF.)

SEE NOTE #2

-6 BOLT

2 1/4 (REF.)

WITH UPLATCH IN LOCKED POSITION (AS SHOWN)

1 31/32 APPROX.

3/32

28L5108-HANDLE

33 19/32 (REF.)

℄ WHEEL ℄ AXLE

AC366-C6-6 (2 PLACES)-SET SCREW
AN936-A6 (2 PLACES) WASHER
AN340-6 (2 PLACES) NUT

(REF.)

AN960-C10-WASHER (2 REQ'D)
AN23-13 CLEVIS BOLT
AN320-3 NUT
AN380-C2-2 COTTER

28L5106-PLUNGER

28L5105-SPRING

28L5103-CYLINDER

28L5104-CAP

AC995-535-4

28L5102-SCREW

AN316-6R-NUT

28L5099 C'STG. (REF.)

28L5107-SLIDE

28L5077-GASKET

PESCO #523 (REF.) JACK

28B5519-6 (REF.)

28B5519-8 (REF.)

28B5595 (REF.)

28B5519-22 (REF.)

COAT ALL INTERNAL PARTS THOROUGLY WITH PARALKETONE OR EQUIVALENT

SNAKEPROOF #1220 LOCKWASHER

NOTES:

(1) -7 TO BE MADE FROM Q812C-10-64 SPACER, REAM .325/.327 ID

(2) ALL REWORKED AN STANDARD BOLTS MUST BE MARKED PER SPECIFICATION 3R-123

FINISH CODE
GP-GREEN PRIME

ASSY DASH NO.	MODEL	NEXT ASSY	QTY
	28-5AMN	28L5003	2
	28-5AMC	28L5003	2
	PBY5A	28L5003	2

REQUIREMENTS PER AIRPLANE

REPLACES — 1.40 CALC WT.

REPLACED BY — ASS'Y WT

SCALE 12"=1'-0

STAMP PART NUMBER WHERE SHOWN

PART NO	STOCK	MATERIAL	SPEC.	LH REQ'D -0	RH REQ'D -2	LH REQ'D -3	RH REQ'D -4	LH REQ'D -5	RH REQ'D
AN320-6									
AN924-A6									
#1220 SNAKEPROOF LOCKWASHER CAD PLATED									
AN936-A6									
BOOTS NUT-SCOVILL CAT. # 96B9067									
AN3-7A									
AN316-5R									
AC566-C6-6									
AN316-5R									
AC566-C6-6									
AN316-5R									
AN960-C5-2									
AN320-3									
AN23-13									
AN960-C516									
GARLOCK KLOZURE #6 (OR EQUIV.) CAD PLATED OPT.									
28L5112-7 (FOR PBY-5A ONLY) C00170 (SEE NOTE)									
28L5077	(GASKET)								
28L5111	(SPRING)								
28L5110	(YOKE)								
28L5108	(HANDLE)								
28L5107	(SLIDE)								
28L5106	(PLUNGER)								
28L5105	(SPRING)								
28L5104	(CAP)								
28L5103	(CYLINDER)								
28L5102	(SCREW)								
28L5112-0	MADE AS ANE-ES EXCEPT THREADED PORTION IS 1" LONG.								

PARTS LIST PER ASSY.

AC								
NAVY NONE	TOUCH UP WITH GP	12 7/16						
HEAT TREAT	FINISH	DRAFT	CHECK	STRUCT.	MAT	APPROV	DRA.	

NAME INSTALL ℄ ASS'Y-MLG. UPLATCH RELEASE ℄ EMERGENCY RELEASE

CONSOLIDATED AIRCRAFT CORP. San Diego, Calif.

CORP. NUMB.

SERIAL D DWG 28L5112

R

LET	ALTERATION	DATE	BY
A	3.360 WAS 3.363	4-28-42	[illegible]
B	—CONTL. (4) 1/4 x 626 x 3 1/2 D) Mat'l — (4) 1/4 x 3.062 x DIA. ADDED. NOTE "SCHEDULE J" TUBING MAY BE USED	[illegible]	[illegible]
C	REMOVED 3/4 DIM. NO INT. CHG.	7-25-42	[illegible]

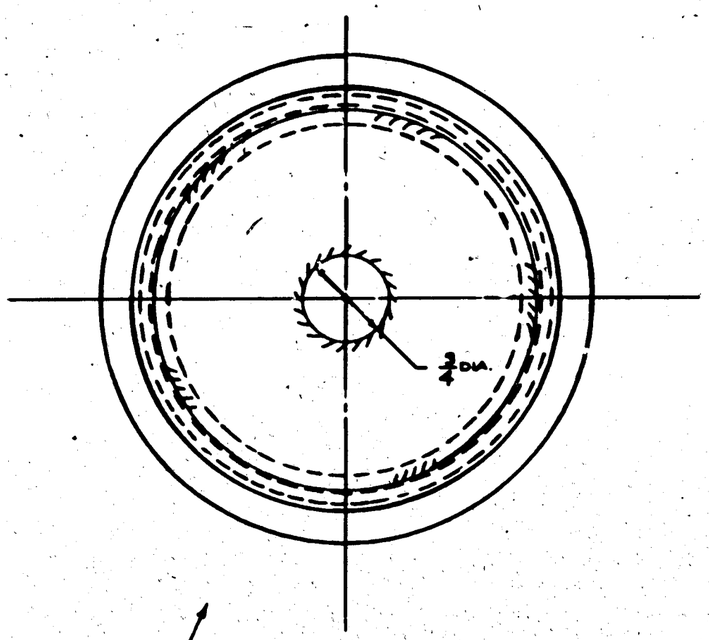

(B) SCEDULE J TUBING MAY BE USED

FINISH CODE	
Z	ANODIC TREATMENT
P	[illegible] PRIMER
AP	ALUMINIZED PRIMER
C	CADMIUM PLATE

FUTURE PARTS WILL BE ON ← Contr 7713 & Contr 88476

ASST. DASH NO.	MODEL	NEXT ASSY.	REQ'D
	CONSAIR	28L3155-4	1
	CONVAIR	28L3065-4	1
	PBY-5A	28L3023	1

REQUIREMENTS PER AIRPLANE

REPLACES — 3.2 Max. WT.

REPLACED BY — ASY. WT.

LIMIT OF DECIMALS UNLESS OTHERWISE SPECIFIED ± .010 — SCALE 12"=1'0"

STAMP PART NUMBER WHERE SHOWN

PART No.	STOCK	MATERIAL	SPEC.	LH REQ'D	RH REQ'D	LH REQ'D	RH REQ'D	LH REQ'D	RH REQ'D	LH REQ'D	RH REQ'D	LH REQ'D	RH REQ'D
-8	3 1/2 DIA x .083 W	CRS STL TUBE	4130									1	1
-7	4 1/2 DIA x .125 W x 7 3/4 LG	CRS STL SHT	4130									1	1
-6	4 1/2 DIA x .125 W x 3 LG	CRS STL TUBE	4130									1	1

PARTS LIST PER ASSY.

A'C		DRAWN	BH	CHECKED		KLEIN
NAVY [illegible] REQ.	C-P	1-12-42			VEZ	1-12-42
HEAT TREAT	FINISH	DRAFT	DESIGN	STRUCT.	MAT'L	APPROV.	ENG.

NAME: END FITTG-N.L.G.-TORQUE TUBE

CONSOLIDATED AIRCRAFT CORP. SAN DIEGO, CALIF.

OPP. HAND

ENGR. D

28L5135

R

LET	ALTERATION	DATE	BY
A	-8 REPLACED -6 REMOVED		
	NOTE "LOCATE -7 ... HOLES"		
	AN442AD4(2) WAS AN526DD-1032-8(2), AC365D1032(2) &		
	AN960D10(2). ADDED		
	28E6255 REF. 28E5812 (REF.)		
	NO WT. CHG.	10-21-41	HUNTER

INCOMER BUR. AERO. CHANGE #40-PBY-5A
E.O. A53820A

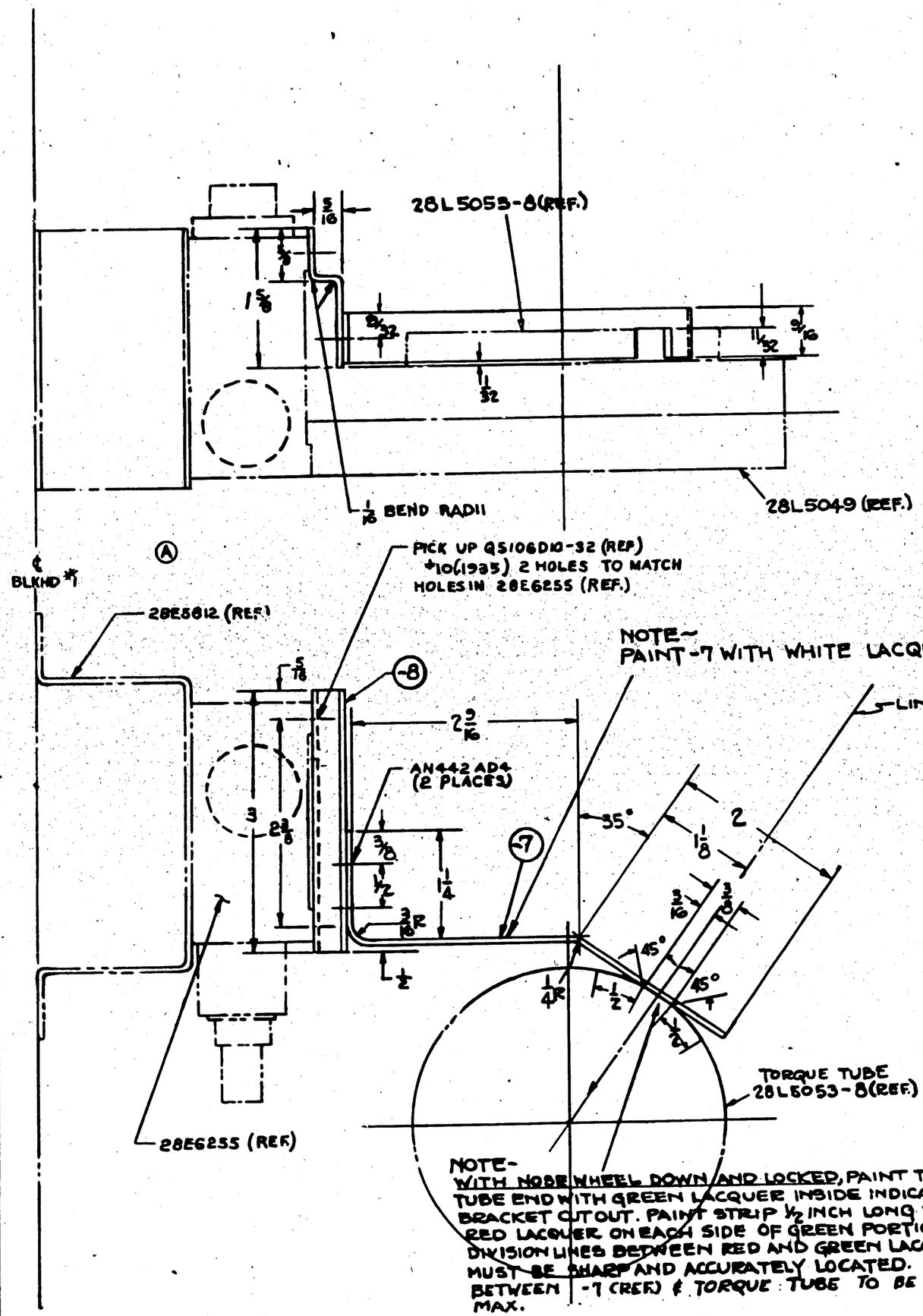

NOTE~
WITH NOSE WHEEL DOWN AND LOCKED, PAINT TORQUE TUBE END WITH GREEN LACQUER INSIDE INDICATOR BRACKET CUTOUT. PAINT STRIP 1/2 INCH LONG WITH RED LACQUER ON EACH SIDE OF GREEN PORTION. DIVISION LINES BETWEEN RED AND GREEN LACQUER MUST BE SHARP AND ACCURATELY LOCATED. GAP BETWEEN -7 (REF.) & TORQUE TUBE TO BE 1/22" MAX.

FINISH CODE	
Z	ANODIC TREATMENT
P	P-27 PRIMER
AP	ALUMINIZED PRIMER
C	CADMIUM PLATE

ASSY. DASH No.	MODEL	NEXT ASSY.	QUAN.
	28-SAMC	28L5004	1
	28-SAMN	28L5004	1
	PBY-5A	28L5004	1

REQUIREMENTS PER AIRPLANE

REPLACES — CALC WT. .05 lbs

REPLACED BY — ACT. WT.

UNLESS OTHERWISE SPECIFIED DIMENSIONS ARE IN INCHES — SCALE 12" = 1'-0"

± 1/32 & ± 1/2°

STAMP PART NUMBER WHERE SHOWN

AN442AD4 2

PART No.	STOCK	MATERIAL	SPEC.	LH REQ. -0	RH REQ. -2	LH REQ. -3	RH REQ. -4	LH REQ. -5	RH REQ.
	-8	.032 X 2 1/2 X 3 1/8	ALC. 24 ST	4748 COND. T	1				
Δ	-7	.064 = 1/4 = 5 1/8	ALC. 24 ST	47A8 COND. T	1				

PARTS LIST PER ASSY.

AC
NAVY NONE
HEAT TREAT

Z-P & NOTED
FINISH

	DRAFT	CHECK	STRUCT	MAT	APPROV	ENG
DATE	2-27-42	3-4-42	3-6-42			11/7/42

NAME BRACKET ~ N.L.G. ~ DOWN LOCK-INDICATOR

CONSOLIDATED AIRCRAFT CORP. SAN DIEGO, CALIF.

OPP. HAND

SIZE D — 28L5140

R

LET	ALTERATION	DATE	BY

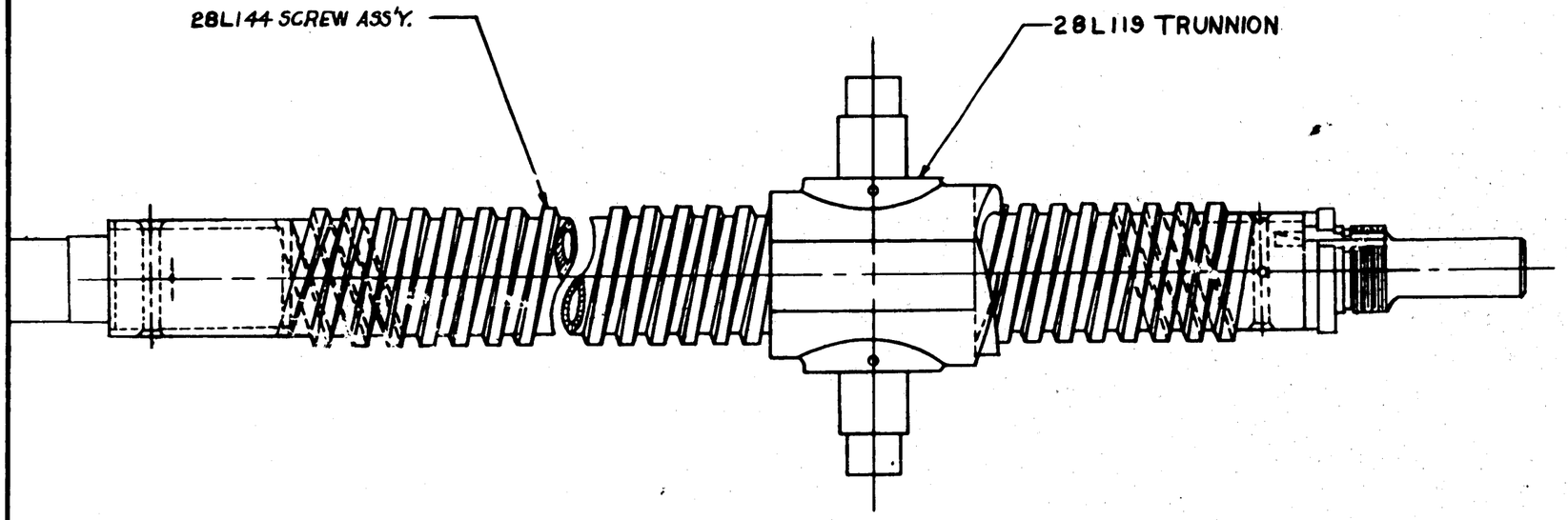

ASSY. DASH NO.	MODEL	NEXT ASSY.	QTY.
-R	PBY-5B	28L078	1
-L	PBY-5B	28L078	1
-R	PBY-5A	28L078	1
-R	PBY-5	28L078	1
-L	PBY-5A	28L078	1
-L	PBY-5	28L078	1

REQUIREMENTS PER AIRPLANE

REPLACES	6.71 GALC. WT.
REPLACED BY	ASY. WT.
LIMIT ON DIMENSIONS UNLESS OTHERWISE SPECIFIED: ± .010	SCALE: 12"=1'-0"

STAMP PART NUMBER WHERE SHOWN

PART No.	STOCK	MATERIAL	SPEC.	LH REQ.	RH REQ.	LH REQ.	RH REQ.	LH REQ.	RH REQ.	LH REQ.	RH REQ.	LH REQ.	RH REQ.
28L144-R				-	1								
28L144-L				1	-								
28L119-R				-	1								
28L119-L				1	-								
PARTS LIST PER ASSY.				-0		-2		-3		-4		-5	

AC		STEWART					
NAVY NONE	NONE	7-13-43	8-10-43				
HEAT TREAT	FINISH	DRAFT	CHECK	STRUCT	MAT	APPROV	ENG.

NAME SCREW & TRUNNION ASS'Y - FLOAT RETRACTING MECHANISM

OPP. HAND 28L5148-R

CONSOLIDATED VULTEE AIRCRAFT CORP. SAN DIEGO DIVISION . . SAN DIEGO, CALIF.

SIZE D

28L5148

APPROVED FOR TOOLING BY Jane 8/3-43

R

28L5148

LET	ALTERATION	DATE	BY
A	IN PBQ/SUPP. BLK. REMOVED		
	28-SAMN NEXT ASSY. 28L5003		
	& 28-SAMC NEXT ASSY. 28L5003		
	NO WT. CHG.	9/13/43	WHEELER
B	ADDED LIMIT. "MCR 301--301C-1"		
	NO WT. CHG.	9/13/43	WHEELER

MCR 301C

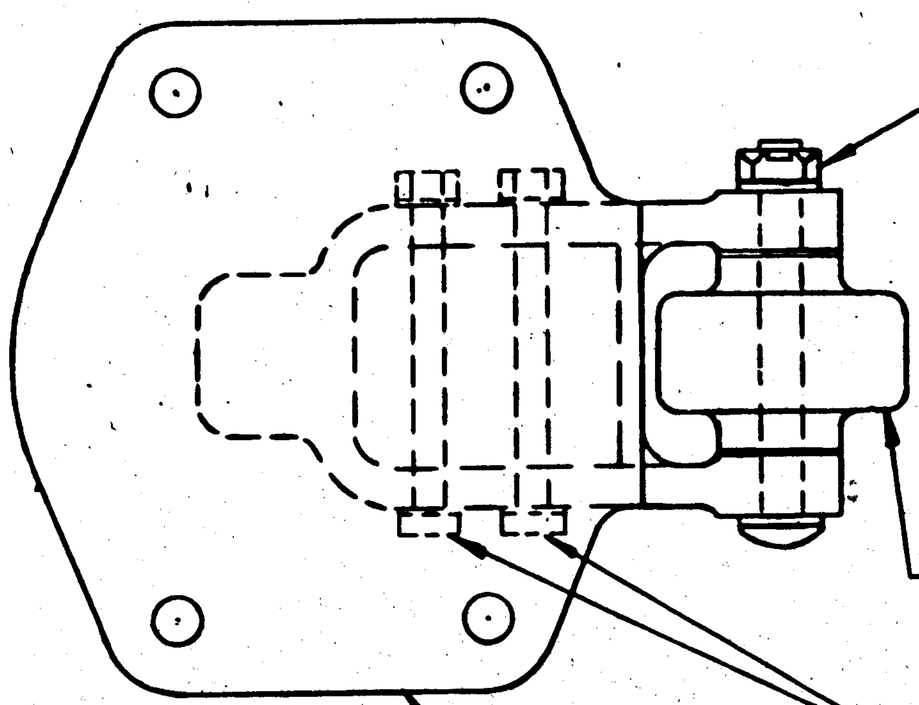

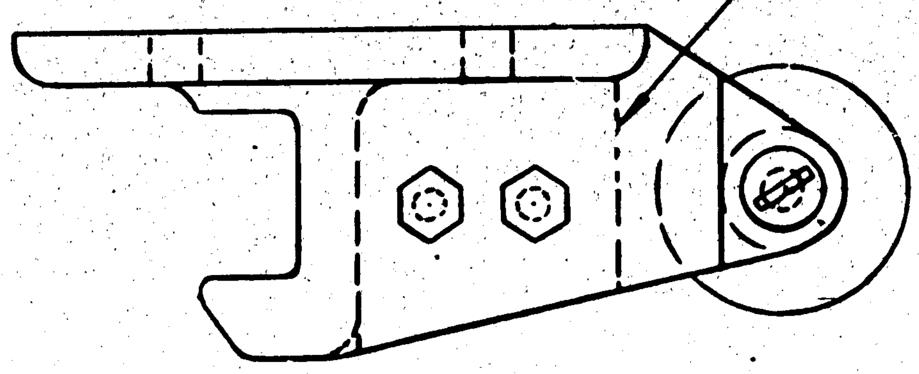

MCR 301 TO MCR301C-1

APPROVED FOR TOOLING BY
Gene 7/26-48

				PART No.	STOCK	MATERIAL	SPEC.	-0 REQ.
				Q7102 AL10				4
				AC364D1032				2
				AN960-416				2
				AN380C2-2				1
				AN320-4				1
				AN24-38				1
	PBY-5A	28L5003	2	AN3D21				2
ASSY. DASH No.	MODEL	NEXT ASSY.	REQ.					
REQUIREMENTS PER AIRPLANE				28L5099				1
REPLACES		1.74 CALC. WT.		28L5100				1
				28L5149				1
REPLACED BY		ACT. WT.						
LIMIT ON DIMENSIONS UNLESS OTHERWISE SPECIFIED ± 1/32		SCALE 12"=1'0"		PARTS LIST PER ASSY.				
STAMP PART NUMBER WHERE SHOWN								

Columns -2, -3, -4, -5 (LH/RH REQ.) are blank.

[redacted]

AC		7-21-43					
NAVY NONE	NONE	WHEELER					
HEAT TREAT	FINISH	DRAFT	CHECK	STRUCT	MAT	APPROV	ENG.

NAME ASSY.-MLG. OLEO BUMPER ROLLER

OPP. HAND

DWG. SIZE D 28L5150

CONSOLIDATED VULTEE AIRCRAFT CORP. SAN DIEGO DIVISION . . SAN DIEGO, CALIF.

R. 0515782

LET	ALTERATION	DATE	BY
E	REDRAWN. WAS "A" SIZE.	1-31-41	[illegible]
F	ADDED -4, -5, -6 & -7.	4-28-42	[illegible]

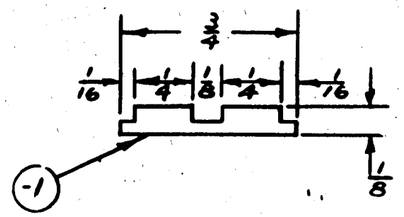

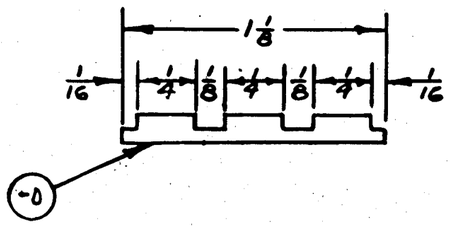

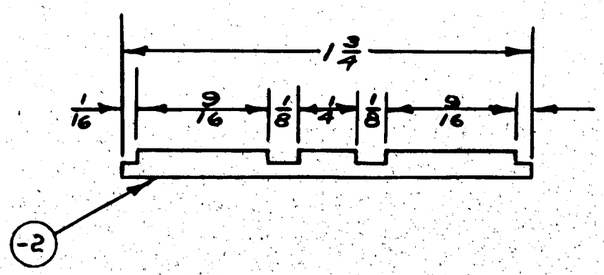

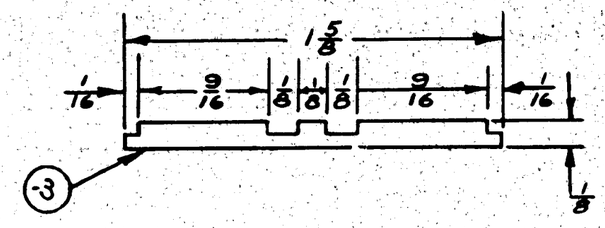

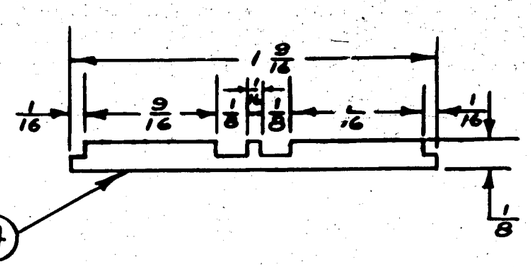

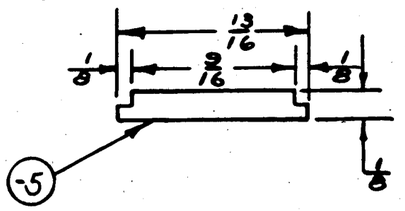

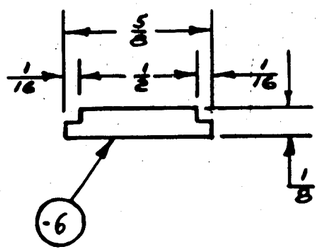

NOTE:
SCHLEGEL MFG. CO.
FELT SECTION
#14X106. MADE
BY THE SCHLEGEL
MFG. CO.
ROCHESTER, N.Y.

TRAINING STAND S.O. 935-12

S.O. 933-48

ASSY. DASH No.	MODEL	NEXT ASSY.	REQ.
	SEE B/M.		
-6	PB2Y-2	29F2567	1
-5	PB2Y-2	29F2567	3
-4	PB2Y-2	29F2567	1
-3	PB2Y-2	29F2567	1
-6	XPB2Y-3	29F2567	1
-5	XPB2Y-3	29F2567	3
-4	XPB2Y-3	29F2567	1
-3	XPB2Y-3	29F2567	1
-6	PB2Y-2	29F2567	1
-5	PB2Y-2	29F2567	3
-4	PB2Y-2	29F2567	1
-3	PB2Y-2	29F2567	1
	B240		
	B-24A		
	B-24		
	XB-24		
	PB2Y-2	SEE B/M.	
	PBY-4		
	PBY-3		
	PBY-2		
	PBY-5A		

REQUIREMENTS PER AIRPLANE

REPLACES M-1564 "A" SIZE OF 7/7/37 — CALC WT.

REPLACED BY — ACT. WT.

LIGHT OD SHEDDING UNLESS OTHERWISE SPECIFIED — SCALE 24" = 1'-0"

STAMP PART NUMBER WHERE SHOWN

PURCHASE TO DWG.

PART No	STOCK	MATERIAL	SPEC.	LH REQ. -0	RH REQ. -2	LH REQ. -3	RH REQ. -4	LH REQ. -5	RH REQ. -6	LH REQ. -7	RH REQ.
			PARTS LIST PER ASSY.								
-7	LONG	FELT	COMM.								
-6	LONG	FELT	COMM.								
-5	LONG	FELT	COMM.								
-4	LONG	FELT	COMM.								
-3	LONG	FELT	COMM.								
-2	LONG	FELT	COMM.								
-1	LONG	FELT	COMM.								
M-1564-0 ●	LONG	FELT	COMM.								

AC		SCHOEN-EMAN	4-28-42					
NAVY								
HEAT TREAT	FINISH	DRAFT	CHECK	STRUCT	MAT	APPROV	ENG.	

NAME SCHLEGEL LINING — PILOT'S SLIDING WINDOW PANEL

CONSOLIDATED AIRCRAFT CORP. SAN DIEGO, CALIF.

OPP. HAND

DWG. SIZE D

M-1564

R

LET	ALTERATION	DATE	BY
C	REDRAWN A/NEO19 AS PER E-IC-39 & ADDED -5		

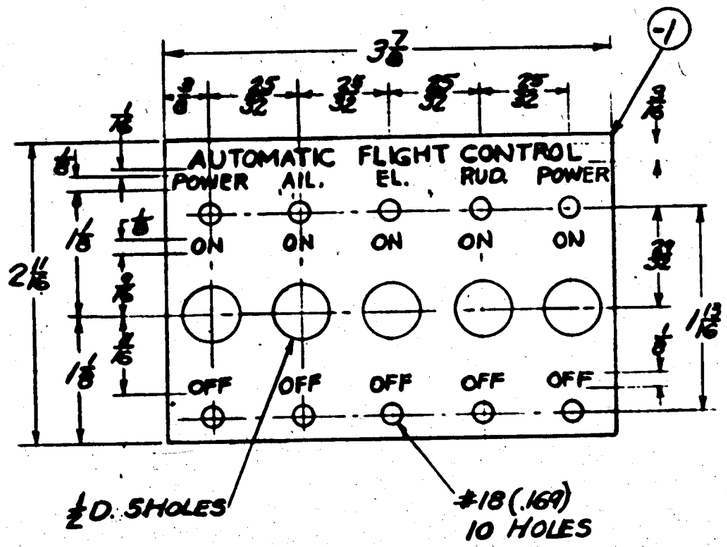

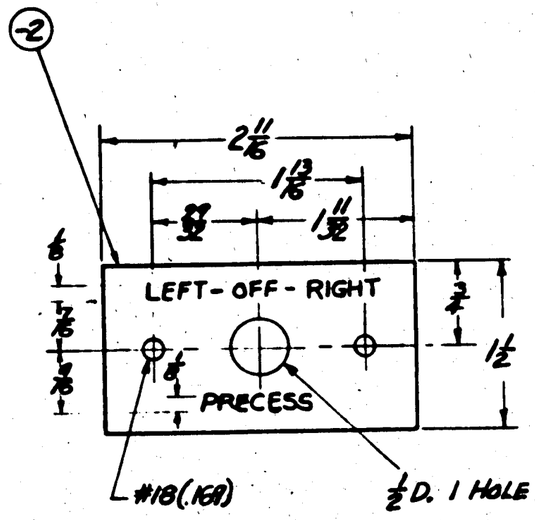

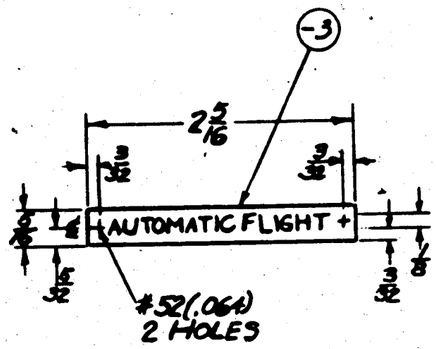

LETTERING TO BE ⅛" HIGH BLOCK – RAISED & POLISHED ABOVE ETCHED - DULL BLACK BACKGROUND.
WHEN "F" FOLLOWS PART NUMBER LETTERS TO BE RECESSED & FILLED WITH PALE GREEN FLOURESCENT LACQUER (#10 U.S. RADIUM CO. OR EQUIV.) BACKGROUND DULL BLACK.

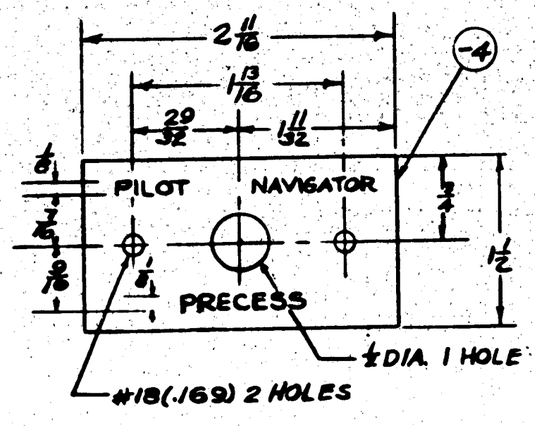

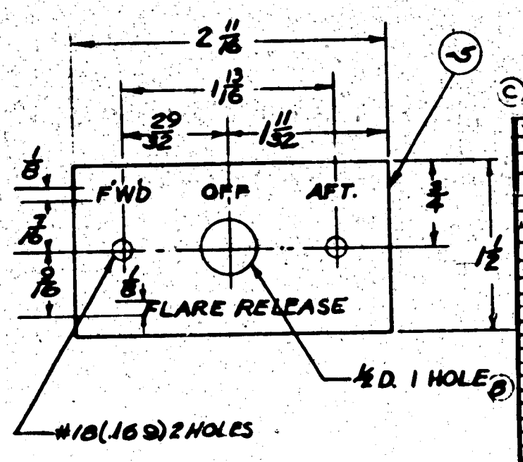

ASSY. DASH No.	MODEL	NEXT ASSY.	REQ.
-3F	PBY-3A	28F6234	1
-1F	PBY-3A	28F6324	1
-2	PBY-5A	28F5008	1
-1	PBY-5A	28F5003	1
-2	PBY-5	28F5002	1
-1	PBY-5	28F5002	1
-2	PBY-5	28F5015	1
-1	PBY-5	28F5015	1
-2	XPBY-5	28F1120	1
-2	PBY-5Z	28F1120	1
-1	PBY-5	28F1120	1
-1	PBY-5	28F1120	1
-1F	PBY-5A	28F5116	1
-1F	PBY-5A	28F5116	1
-2	PBY-5A	28F5116	1
-2	PBY-5A	28F5116	1
-1	PBY-5A	28F5116	1
-1	PBY-5A	28F5116	1
-2	PBY-5A	28F5116	1
-2	PBY-5A	28F5116	1
-1	PBY-5A	28F5116	1
-1	PBY-5A	28F5116	1
-4	PBY-5A	28F5116	1
-3	B24A	32E018	1
-2	B24A	32E018	1
-1	B24A	32E027	1
-4	B24	32E027	1
-4	XB24	32E027	1
-3	B24	32E018	1
-3	XB24	32E018	1
-2	B24	32E027	1
-2	XB24	32E027	1
-1	B24	32E027	1
-1	XB24	32E027	1

984 ON
#1-97

REQUIREMENTS PER AIRPLANE

REPLACES NNE 6/8 6-15-39 — NOTED CALC. WT.

REPLACED BY — ACT. WT.

LIGHT ON SHOULDERS UNLESS OTHERWISE SPECIFIED ± 1/32 — SCALE 12" = 1'0"

STAMP PART NUMBER WHERE SHOWN

DASH NO.	CALC. WT.	ACT. WT.
-1	.0276	
-2	.0114	
-3	.0022	
-4	.0114	
-5	.0114	

PART NO.	STOCK	MATERIAL	SPEC.	LH REQ.	RH REQ.	LH REQ.	RH REQ.	LH REQ.	RH REQ.	LH REQ.	RH REQ.	LH REQ.	RH REQ.
-5	.020	2S0 Al.	ST-1615-1 MW										
-4	.020	2S0 Al.	ST-1615-1 MW										
-3	.030	2S0 Al.	ST-1615-1 MW										
-2	.030	2S0 Al.	ST-1615-1 MW										
-1	.020	2S0 Al.	ST-1615-1 MW										

PARTS LIST PER ASSY.

AC NONE	NOTED	Weight	
NAVY NONE	NOTED	Date	5/6/41
HEAT TREAT	FINISH	DRAFT	CHECK

NAME NAMEPLATES - ELEC. - AUTOMATIC FLIGHT CONTROL

CONSOLIDATED AIRCRAFT CORP. SAN DIEGO, CALIF.

OPP. HAND NONE

SIZE D — NNE019

CHECKED BY WILSON DATE 7-11-41

C.A.C. GOODYEAR

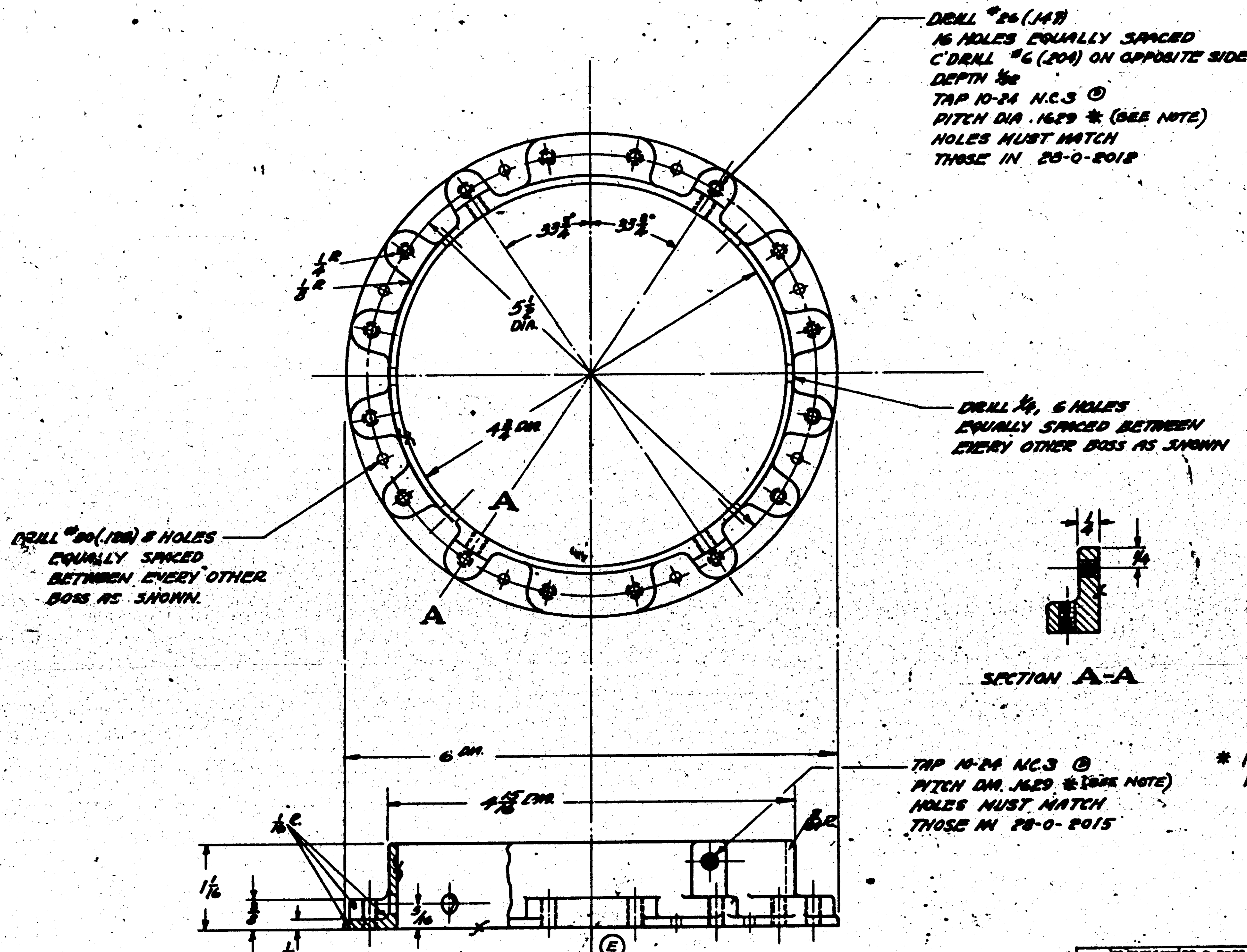

* NOTE:- HOLD P.DIA'S. AS CLOSE TO LOW LIMIT AS POSSIBLE. (D)

NOTE:- CASTING ± 1/32
LIMITS MACH. ± .010

MATERIAL MAY BE:
1.- AL ALLOY CASTING 195T4, SPEC. AN-QQ-A-390 CL.I, T.S. 29,000 P.S.I., OR
2.- AL ALLOY CASTING S195T6, SPEC. AN-A-5 CL.II, T.S. 32,000 P.S.I.

[redacted]

SUPPLIES & EQUIPMENT CLASSIFICATION

LTR	ALTERATION	DATE	BY
B	TRACED		
C	ADDED PBY-3 TO B.M.		
D	WAS TAP 10-24 NC-6		
	P.DIA'S. WERE .1629		
	ADDED GEN. P.D. TOLERANCE NOTE		
E	FILLED IN BOTH SLOTS ON LOWER		
	SURFACE. REMOVED 1/4 & 3/16 DIMS.		
	NEG. WT. CHG.	3-23-42	
F	IN B/M, REPLACED "AL. ALLOY CAST'G		
	ALCOA #195T4", "46H CL.4", & "BAE 5AB"		
	WITH "NOTED". TO FACE ADDED MATERIAL		
	NOTE. NO WT. CHG.	8-26-43	NODIR

O.H.	MODEL	NEXT ASSY.	REQ.
		28-0-2003	2 EA
		28-0-2003	2 EA
		28-0-2003	2 EA
		28-0-2003	2 EA
	PBY-5	28-0-2013	2
	PB2Y-2	29-0-1003	4
	PBY-4	28-0-2003	
	XPB2Y-1	28-0-2002	
	PBY-3	28-0-2001	
	PBY-2	28-0-1003	

REQUIREMENTS PER AIRPLANE — ST'D PARTS — PART NO. — MAT. — PARTS LIST PER ASSY.

REPLACES	APPROVED LCW	DATE 11-6-36
REPLACED BY	CALC. WT. .53 LBS.	ACT. WT.
LIMIT ON DIMENSIONS UNLESS OTHERWISE NOTED ± NOTED	SCALE 12"=1.0"	

[redacted]

NAVY	MATERIAL	SPEC.	HEAT TREAT	FINISH
NOTED		NOTED	NOTED	II

DRAFT — CHECK — ENGR.

CONSOLIDATED AIRCRAFT CORP.
SAN DIEGO, CALIF.

NAME: FLANGE - OIL TANK OUTLET TAPPING

OPP. HAND

DWG. D 28-0-2015

SUPPLIES & EQUIPMENT CLASSIFICATION			
LET	ALTERATION	DATE	BY
G	TRACED	8-9-43	[redacted]
H	ADDED NOTE [illegible]	[illegible]	[illegible]
J-H	ADDED 1" DRILL 12 HOLES & 4" DIM TO FACE	4-21-41	[redacted]
K	CHANGED METHOD OF JOINING -2 FROM AN426D3 RAN-4258D3 RIVETS TO SPOT-WELD.	7-16-41	[redacted]

E.O. 10001

E.O. A5642 REVISE, 20-E

SECTION C-C
FULL SIZE

(-3) BAND
.040 ALCLAD
SPEC. 4148 COND. T

SECTION B-B
FULL SIZE

AN442-83 SIX KNOTS THRU -8 & -5 (INDX) MANUFACTURED HEAD IS PLACED ON INSIDE. FLUSH HEAD SHALL BE DRAWN ON OUTSIDE. (FLUSH ON -6 ASSY'S. ONLY) (N)

2 3/32 DRILL 4 HOLES SPACED AS SHOWN TO MATCH WITH 20-0-2013

1" DRILL 12 HOLES EQUALLY SPACED SAME SPACING AS AT OTHER END.

SPOTWELD -3 TO -2

(K) SPOTWELD (-2)

TAPER TO 4 1/2 DIA AT OPPOSITE END AN426D3 RIVET C'SK. RIVET BOTH SIDES ON -4 (REF.) ASS'Y. ONLY.

SPOTWELDS SPACED APPROX. 2" APART.

TAPER TO 4 11/16 DIA. AT OPPOSITE END.

(E)

1" DRILL 6 HOLES EQUALLY SPACED AS SHOWN.

(-2) WELL
.040 ALCLAD
SPEC. 4148 COND. T.

(-3) .040 ALALLOY (24ST) ALCLAD
SPEC. 4148 COND. T.
ON -4 (REF.) ASS'Y. ONLY.

SECTION A A
FULL SIZE.

[redacted]

REPLACES	SCW APPROVED 11-6-36 DATE
REPLACED BY.	GALS. WT. ACT. WT.
[redacted]	6 "U-S" GALLONS

O. H.	MODEL	NEXT ASSY.	REQ.	ST'D PARTS	LH RH REQ.	PART NO.	LH RH REQ.	LH RH REQ.	LH RH REQ.	LH RH REQ.	LH RH REQ.	LH RH REQ.
	PDY-5	20-0-3011	2	AN442D3		20-0-2013-6	1					
-4	PDY-4	20-0-3011				20-0-2013-5	1					
-4	XPDY-4	20-0-3011		(K)		20-0-2013-4	1					
-4	PDY-3	20-0-3011				20-0-2013-3	1					
	PDY-2	20-0-3011				20-0-2013-2	1					

REQUIREMENTS PER AIRPLANE | MAT. | PARTS LIST PER ASSY.

A C				REVISED	CHKD	ASSEMBLY
NAVY NOTED	NOTED	NONE	Z	8-9-43		E
MATERIAL	SPEC.	HEAT TREAT	FINISH	DRAFT	CHECK	ENGR.

CONSOLIDATED AIRCRAFT CORP. SAN DIEGO, CALIF.

NAME WELL ASSEMBLY-OIL TANK

OPP. HAND

SIZE D 20-0-[redacted]

LET	ALTERATION	DATE	BY
T	TRACED. NO WT. CHG.	7-25-43	[illegible]
U	PBY-5, PBY-5A, PBY-5B, & 28-5'S. N.A. 28-3010 (2 EA) WAS (4 EA). ADDED PBY-5, PBY-5A, PBY-5B, & 28-5'S. N.A. 28G-3010 (2 EA). NO WT. CHG.	7-25-43	[illegible]
V	CHG'D. DIM: 5/16 TO 21/64. NO WT. CHG.	8-29-43	ABERG
W	IN BILL, REPLACED "AL. ALLOY CSTG" & "H.A.F. SA-8" WITH "NOTED". TO FACE, ADDED MATERIAL NOTE. NO WT. CHG.	8-30-43	HODIK

E.O. D24958

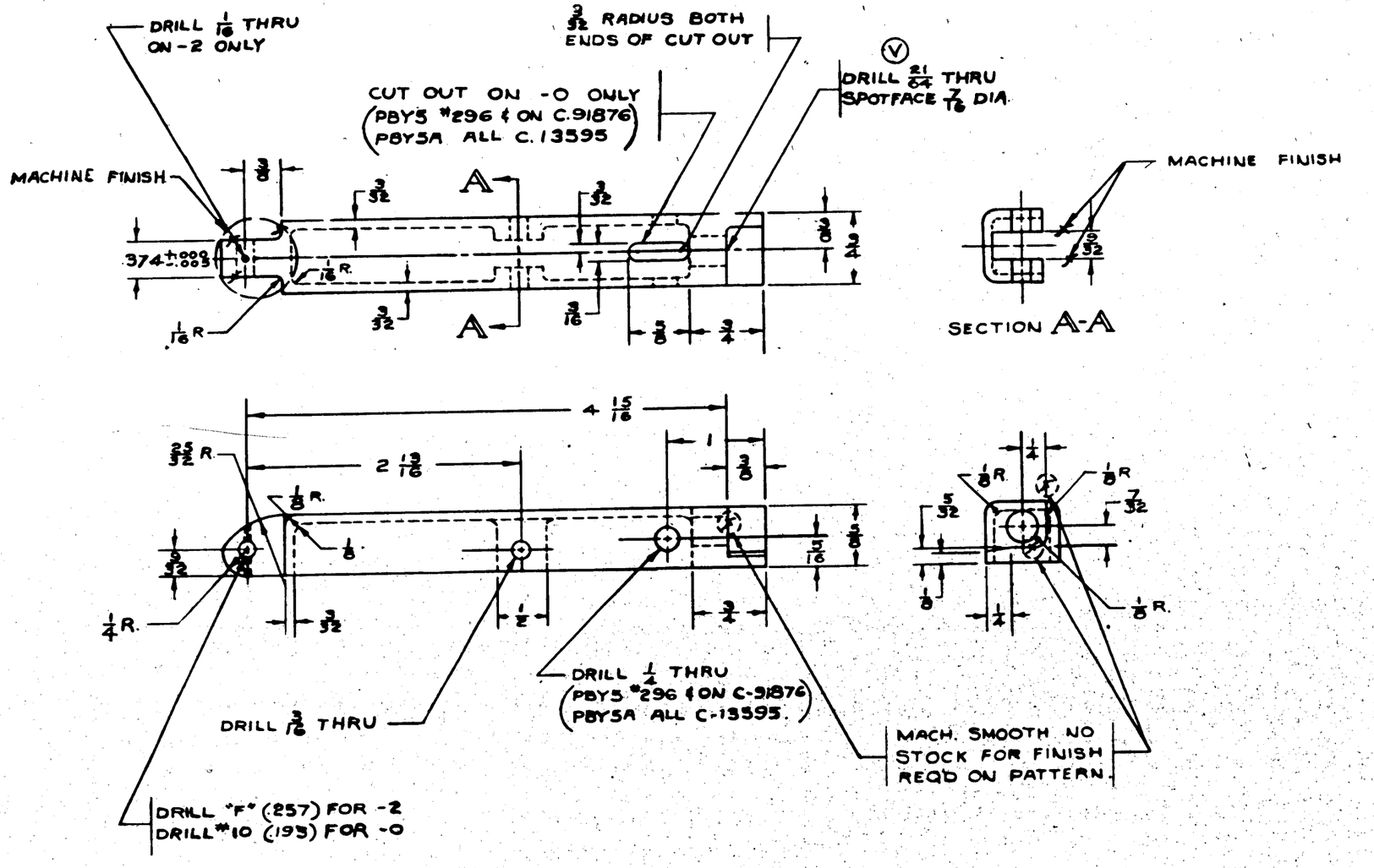

NOTES:
LIMITS ± 1/32 CASTING
± .010 MACH.
FINISH - Z - 2P.

(W) MATERIAL MAY BE:
1.- AL ALLOY CASTING 195T4, SPEC. AN-QQ-A-390 CL.I, T.S. 29,000 P.S.I., OR
2.- AL ALLOY CASTING 319ST6, SPEC. AN-A-5 CL.II, T.S. 32,000 P.S.I.

-0	PBY-5B	28G-3010	2
-0	28-5'S	28G-3010	2
-0	PBY-5	28G-3010	2
-0	PBY-5A	28G-3010	2
-0	28-5'S	280-2018	2
-0	PBY-5B	280-2018	2
-0	PBY-5A	280-2018	2
-0	PBY-5	280-2018	2
-2	PB2Y-2	28G-1003	2
-2	PB2Y-2	280-100	4
	PBY-4	280-2018	2
	XPB2Y-1	280-2018	2
	PBY-3	280-2018	2
	PBY-2	280-2018	2

ASSY. DASH NO. | MODEL | NEXT ASSY. | REQ.

REQUIREMENTS PER AIRPLANE

REPLACES 28-0-2023 OF 10-12-36 | 12 SHA | GALS. STL.

REPLACED BY | ASS'Y.

SCALE: 12" = 1'-0"

± NOTED

STAMP PART NUMBER WHERE SHOWN

PART No.	STOCK	MATERIAL	SPEC.	LH REQ. -0	RH REQ. -0	LH REQ. -2	RH REQ. -2	LH REQ. -3	RH REQ. -3	LH REQ. -4	RH REQ. -4	LH REQ. -5	RH REQ. -5
-0	NOTED	NOTED	NOTED										

PARTS LIST PER ASSY.

AC | NAVY NOTED | HEAT TREAT | NOTED | FINISH

	BOWEN	O.W.M.	MILLER		L.C.W.
DRAFT	10-12-36	10 22 36			11-6-36
	CHECK	STRUCT	MAT	APPROV	ENG

NAME: LATCH - OIL TANK FILLER

OPP. HAND

SIZE D | DWG. 28-0-2023

CONSOLIDATED VULTEE AIRCRAFT CORP. SAN DIEGO DIVISION . . SAN DIEGO, CALIF.

R

28-0-2023

SUPPLIES & EQUIPMENT CLASSIFICATION			
LET	ALTERATION	DATE	BY
A	TRACED	1-28-38	[illegible]
B	P82Y-2 REQS ADDED	10-[illegible]	[illegible]
C	ADDED -3 ASS'Y FOR P82Y-2	12-3-40	[illegible]
D	REMOVED -3 ASS'Y	12-20-40	[illegible]
E	ADDED -4 PART & NOTE: "TO BE	4-28-43	[illegible]
	---22P101(REF) WT. CHG. +.07"		
F	REMOVED BRASS TUBING ~~.500 X .035~~		
	WALL, SPEC-44-T-15 GR. I TYPE A, FINISH		
	"C". ADDED NOTE #1 NO WT. CHG.	9-28-43	CRAIG

E.O.30491
E.O.34942
MCR 169-(1)
E.O.A28439A

(E)

-2

-4 TO BE SNUG FIT INSIDE OF SCREEN 22P101 (REF)

SOLDER

6½

7/16 (REF)

22P097 STRAINER ASS'Y.

(F)

1- MATERIAL FOR -2 MAY BE:-

(A) BRASS TUBING, 3/8 O.D. X.035 WALL, SPEC. 44-T-15-TYPE A-GRADE I, FINISH "C", OR

(B) BRASS TUBING, 3/8 O.D. X.035 WALL, SPEC.- 44-T-15-TYPE A-GRADE II, FINISH "C".

FINISH CODE	
Z	ANODIC TREATMENT
P	A-17 PRIMER
AP	ALUMINIZED PRIMER
C	CADMIUM PLATE

O H	MODEL	NEXT ASSY	REQ	STD PARTS	PART NO	H RH REQ	LH RH REQ	LH RH REQ	N RH 1 2	LH RH REQ
	28-5AMN	28-0-2018	2							
	28-5MA	28-0-2018	2							
	28-5MC	↑	2							
	28-5ME		2							
	28-5MN		2							
	28-5AMC		2							
	P8Y-5	↓	2							
	P8Y-3B	28-0-2018	2							
	P8Y-3A	28-0-2018	2							
	P82Y-2	28-0-1004	4	MCR169-1	.035 X 7/16 X 13 [illegible]		1			
	P8Y-4	28-0-2018								
	P8Y-1	28-0-2018								
	P8Y-3	28-0-2018					1			
	P8Y-2	28-0-2018			22P097		1			
					28-0-2020		1			
REQUIREMENTS PER AIRPLANE				MAT	PARTS LIST PER ASSY		-0	-3		

REPLACES	XCV 11-7-36 APPROVED DATE
REPLACED BY	109 Sht. CALC WT. ACT WT.
1/64 LIMIT ON DIMENSIONS UNLESS OTHERWISE SPECIFIED	12"/1.0" SCALE

A C						
NAVY NOTED	NOTED	NONE	NOTED	BONDER	DUMM.	WELDER
MATERIAL	SPEC	HEAT TREAT	FINISH	[illegible]	[illegible]	[illegible]

CONSOLIDATED AIRCRAFT CORP
SAN DIEGO, CALIF.

NAME: STRAINER ASS'Y.- O/L TANK

DWG NAME

D 28-0-2020

R 8202-0-82

D TRACED 2-11-38 STAC

E ADDED B-24 & XB-24 REQMTS. 5-8-39 SUGG

F TOLERANCES CHANGED FROM ±.015 TO +1/32 -1/64 4-16-41 MCLA

G. 5/16 (REF.) WAS 3/16 — NOTE ADDED
1/4 WAS 3/16 - 1 5/16 ADDED 5-20-41 Rale

H ON DWG ADDED 1 7/32 & 1 13/16 DIMS
± 2.6 R LIMS CHGD TO 3/32 R

J 5/16 R WAS 5/32 R; 1/2 R WAS 5/16 R,
UNMARKED RADII 1/8 WAS 1/16,
ADDED PBY-5B REQTS; ADDED 1/8 R 8-27-42 Chan
TOLERANCE ± 1/32 WAS +1/32 -1/64;
2 3/16 WAS 2 1/2; 5/16 WAS 9/32.
REMOVED DIM 2 1/32. NO WT CHG.

K ADDED 2 1/4 DIM. NO WT. CHG. 11-25-42 CLAC

E.O. A 3506 → EFF. ALL MODELS ASPER Dwg E.O. AA 350 PBY-5 & 5A-51

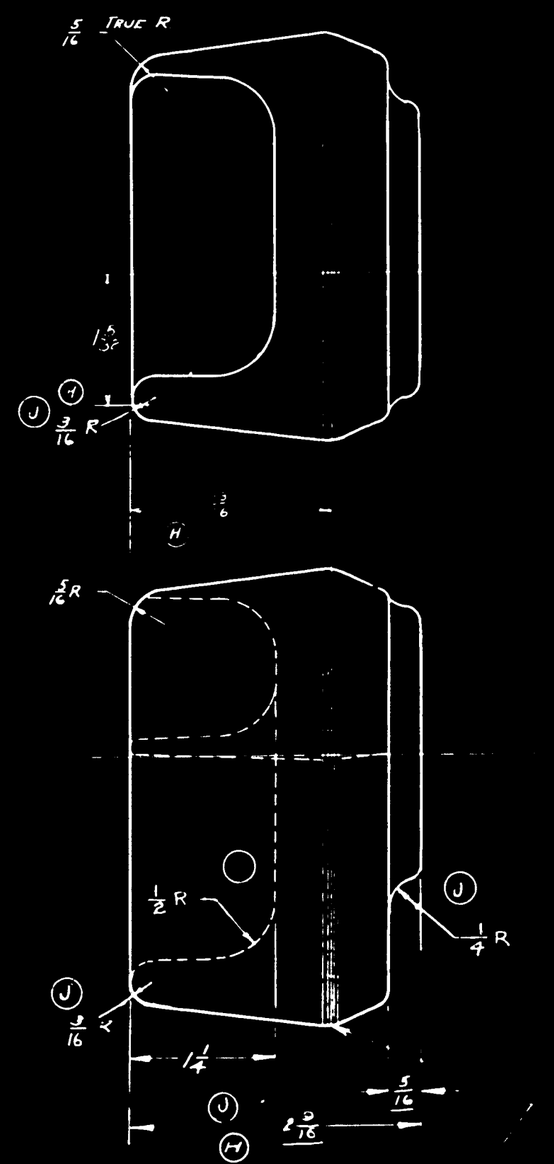

G NOTE: DIM OF PARTING LINE WILL INCREASE HERE.

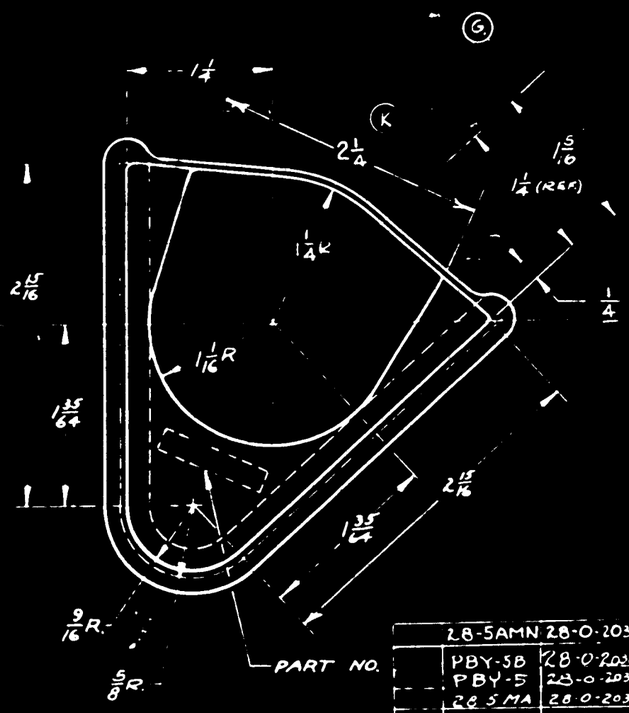

NOTE:-
ALL DRAFT ANGLES 7° J
SMALL UNMARKED RADII 1/8

28-5AMN	28-0-2036	8
PBY-5B	28-0-2036	8
PBY-5	28-0-2036	8
28-5MA	28-0-2036	8
28-5MC	28-0-2036	8
28-5ME	28-0-2036	A
28-5MN	28-0-2036	8
28-5AMC	28-0-2036	8
PBY5A	28-0-2036	8
B-24	28-0-2036-3	8
B-24	28-0-2036-2	8
XB-24	28-0-2036-3	8
XB-24	28-0-2036-2	8
PBY-4	28-0-2036-3	
PBY-4	28-0-2036-2	
PBY-3	28-0-2036-3	
PBY-3	28-0-2036-2	
XPBZY-1	28-0-2036-1	
XPBZY-1	28-0-2036	
PBY-2	28-0-2036-1	
PBY-2	28-0-2036	

28-0-2033 OF REPLACES 11-17-36 2-14-38

.85

F ± 1/32 12"=1'-0"

AL ALLOY FORGING 14ST	57-153 GR S	65,000 #/D"	NONE	COMMERCIAL	F.W.F. HWH. R.
AL ALLOY 14S FORGING	M-277	65,000 #/in²	NONE	6-1837	

CONSOLIDATED AIRCRAFT CORP

FITTING — OIL TANK MOTOR MOUNT — FORGING

D 28-0-2033

SUPPLIES & EQUIPMENT CLASSIFICATION			
LET	ALTERATION	DATE	BY
G	TRACED	2-19-38	Stacy
H.	ADDED B-24 & XB-24 REQMTS.	5-8-39	[illegible]
I	ADDED NF-2 FOR ¼-28 TAPPED HOLES.	9-13-40	[illegible]
J	CHG'D 31/32 DIM. TO 15/16 ℄	7-2-41	Bleay
	ADDED 2½ (REF) DIM.		
K	ADDED NOTE FOR TAP DRILL ⌀	7-10-41	[illegible]
L	ADDED DIM. 1¾ (REF) 2½ DIM. 1/16 2½ (REF.)	8-4-41	[illegible]
M	ON FACE DWG. CHG'D DEPTH		
	OF TAP OF 2 HOLES (7/16 WAS 5/8),		
	(2 HOLES WAS 6 HOLES) ℄ ADDED		
	NOTE "TAP ¼-28NF-2 5/8 DEEP."	8-7-41	[illegible]
N	REM'D NOTE "DRILL 1 HOLE 5/32 DIA.		
	¼ DEEP IN -2 ℄ -3 ONLY. NO WT. CHG.	3-26-43	[illegible]
P	REPLACE NOTE REMOVED IN CHG N. NO WT CHG	4-26-43	[illegible]

E.D.C. 5101
E.O. A11170
LB 30
PBY
B24 c/d

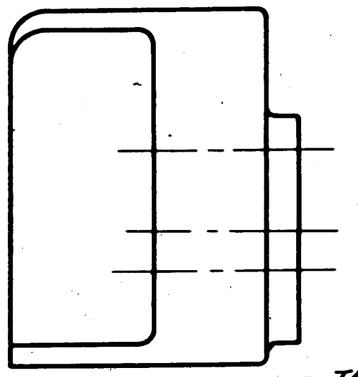

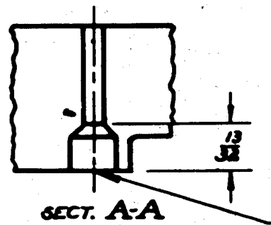

DRILL & C'SINK. FOR AN425 D6. 3 HOLES

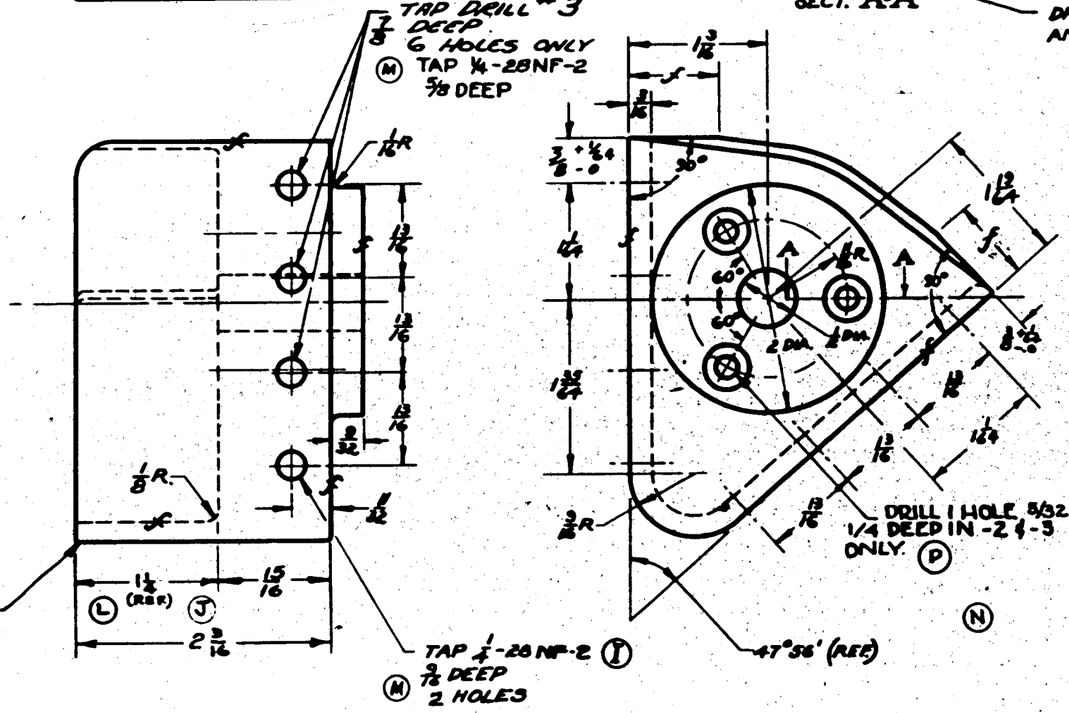

NOTE:— 3
28-0-2036-2 TO BE SAME AS 28-0-2036 EXCEPT, DRILL & C.S. FOR 3 AN425 D6 RIVETS IS TO BE OMITTED
-3 TO BE SAME AS 28-0-2036-1 EXCEPT, DRILL & C.S. FOR 3 AN425 D6 RIVETS IS TO BE OMITTED.

-3	28SAMC	28-0-5503	4
-2	28SAMC	28-0-5503	4
-3	28SMC	28-0-5503	4
-2	28SMC	28-0-5503	4
-3	28SAMN	28-0-2003	4
-2	28SAMN	28-0-2003	4
-3	28SMN	28-0-2003	4
-2	28SMN	28-0-2003	4
-3	28SMA&E	28-0-2003	4 EA
-2	28SMA&E	28-0-2003	4 EA
-3	PBY5A&B	28-0-2003	4 EA
-2	PBY5A&B	28-0-2003	4 EA
-3	PBY-5	28-0-2003	4
-2	PBY-5	28-0-2003	4
-3	LB30	32-0-003	8
-2	LB30	32-0-003	8
-3	B-24A	32-0-003	8
-2	B-24A	32-0-003	8
-3	XB-24	32-0-003	8
-2	XB-24	32-0-003	8
-3	PBY-4	28-0-2003	
-2	PBY-4	28-0-2003	
-3	PBY-3	28-0-2003	
-2	PBY-3	28-0-2003	
-1	XPBZY-1	28-0-2003	
	XPBZY-1	28-0-2003	
-1	PBY-2	28-0-2003	
	PBY-2	28-0-2003	

FINISH [illegible]

REPLACES	LCB 12-10-36 APPROVED	DATE
REPLACED BY	1.0 CALC. WT.	ACT. WT.
.015 LIMIT ON DIMENSIONS UNLESS ± OTHERWISE SPECIFIED	1" = 1'-0" SCALE	

28-0-2033

O. H.	MODEL	NEXT ASSY.	REQ.	ST'D PARTS	LH	RH	PART NO.	1 LH REQ.	1 RH REQ.	1 LH REQ.	1 RH REQ.	1 LH REQ.	1 RH REQ.	1 LH REQ.	1 RH REQ.
REQUIREMENTS PER AIRPLANE				MAT.	PARTS LIST PER ASSY.			PBY-2	PBY-3	[illegible]	PBY-4				
A C									[illegible]		[illegible]		R.		
NAVY									[illegible]						
MATERIAL		SPEC.		HEAT TREAT		FINISH		DRAFT	CHECK	EXAM.	ENG				

CONSOLIDATED AIRCRAFT CORP.
SAN DIEGO, CALIF.

NAME FITTING — OIL TANK MOTOR MOUNT

OPP. HAND 28-0-2036-1

SIZE D

28-0-2036

LET	ALTERATION	DATE	BY
A	REVISED VIEW SHOWING OIL RETURN LINE AND VENT LINE IN OIL TANK TO CLARIFY DRAWING	1-16-43	[illegible]
B	ADD. MAT. NOTE #1 ---- #2 ..... NOTED MAT. IN [illegible] ADDED PINS 10 7/8, 9 7/16, 4 3/16 & 3 1/16 2 PL. WT. CHG. NEG.	1-12-43	SCHNEE
C	IN THE REQ'D AIRPLANE BLOCK CHANGED NEXT ASS'YS. ZE-28-055 WAS 28-0-5000 ZE-28-053 WAS 28-0-5000 ZE-28-049 WAS 28-0-5000 NO WEIGHT CHANGE	6-5-43	LINK

PBY-5 OIL SYSTEM DIAGRAM

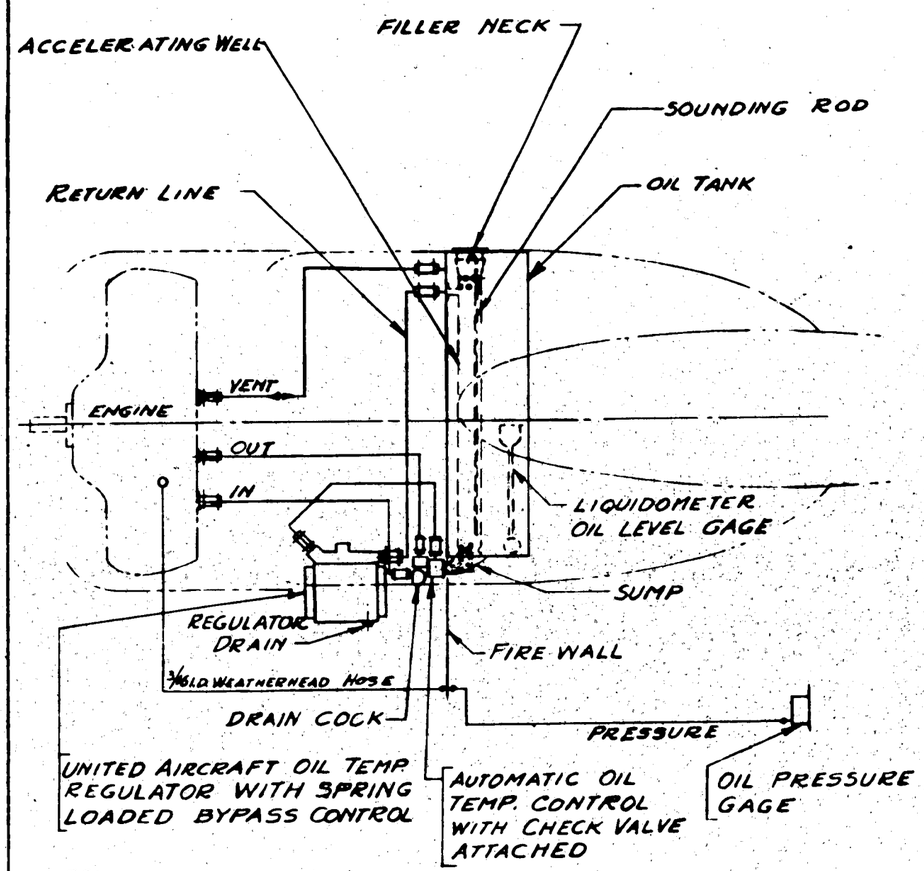

LINES:-
INLET 1 1/2 O.D. x.049
MAIN 1" O.D. x.049
VENT 3/4 O.D. x.049
PRESS 1/4 O.D. x.032
MATERIAL: AL. ALLOY TUBING SPEC. 44T32 TEMPER A

HOSE CONNECTIONS
UNION COUPLINGS

CONSOLIDATED AIRCRAFT CORP. SAN. DIEGO, CALIF. DRAWN 12-6-39

DWG. 28-0-5002

10 7/8 | 1/4 | 3/16 | 3/16 | 8 1/2

TRIM ALL BLUE PRINT COPIES ON THIS LINE

PART MAY BE
1- BLUE PRINT CUT-OUT.
2- DECALCOMANIA, BLACK LINES ON WHITE, A.A.F. SPEC. 14118 WATER SLIP-OFF TYPE (MAY BE PURCHASED FROM DUROCHROME CO., LOS ANGELES, CALIF. TYPE K OR EQUIV.) PART NUMBER TO BE PRINTED ON REVERSE SIDE OF PAPER BACKING. ALL LETTERS 1/8" HIGH EXCEPT AS SHOWN.

ASSY DASH NO.	MODEL	NEXT ASSY.	REQ'D
	PBY-5B	ZE-28-055	1
	PBY-5A	ZE-28-049	1
	PBY-5	ZE-28-053	1

REQUIREMENTS PER AIRPLANE

REPLACES — CALC. WT.
REPLACED BY — ACT. WT.
LIMIT OF DIMENSIONS UNLESS OTHERWISE SPECIFIED: + — SCALE —
STAMP PART NUMBER WHERE SHOWN

NOTED

PART No.	STOCK	MATERIAL	SPEC.	LH REQ. -0	RH REQ. -2	LH REQ. -3	RH REQ. -4	LH REQ. -5	RH REQ.

PARTS LIST PER ASSY.

AC
NAVY
HEAT TREAT — FINISH

DRAFT: DONALD 12-6-39; DUNCAN 12-6-39; CHECK; STRUCT.; MAT.; APPROV.

NAME OIL SYSTEM DIAGRAM
OPP. HAND
CONSOLIDATED AIRCRAFT CORP. SAN DIEGO, CALIF.
SIZE D
28-0-5002

E O 22775B
E O 36221
PBY-5
28-5
RYAN E.O 7424

LET	ALTERATION	DATE	BY
A	ADDED NOTE	11-9-[illegible]	[illegible]
B	CHANGE 28-0-5012 TO 28P5074	4-2-41	COTEL
	CHG FACE OF DWG TO AGREE WITH		
	SOLAR DWG #6-354		
	[illegible] WAS [illegible] [illegible] WAS [illegible]		
	[illegible] WAS [illegible] [illegible] WAS [illegible]		
C	DIM. 15/32 WAS 3/8. NO WT. CHG	8-31-41	FUNK
D	TO FACE OF DWG, CHG. NOTE "79 HAI		
	-02 - - RIVETS" WAS "AC366-1032 #-		
	TEMP. STAINLESS STL. NUT PLATE		
	ATTACH. WITH Q4303 D3 RIVETS".		
	ALSO, NOTE "22 HAI-02 - - - - STOP		
	NUT CO." IN B/M. REMOVED "AC 366		
	-1032" REPLACED WITH 79 HAI-02		
	C.AC. #NU 45-50. BR'T. REVTS/AIR		
	TO DATE. (WT. CHG NEG.)	1-19-42	[illegible]
E	CANCELED & REPLACED BY SOLAR #6-354		
F	REINSTATED 28-0-5010. WAS	8-23-41	[illegible]
	CANCELED & REPLACED BY		
	SOLAR DWG # 6-354 NO WT. CHG		

MCR #213
MCR 213A

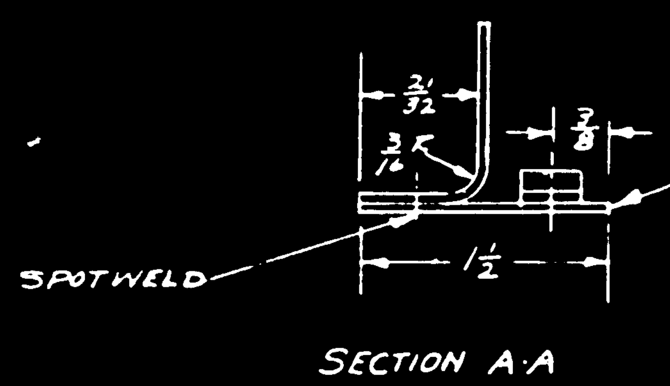

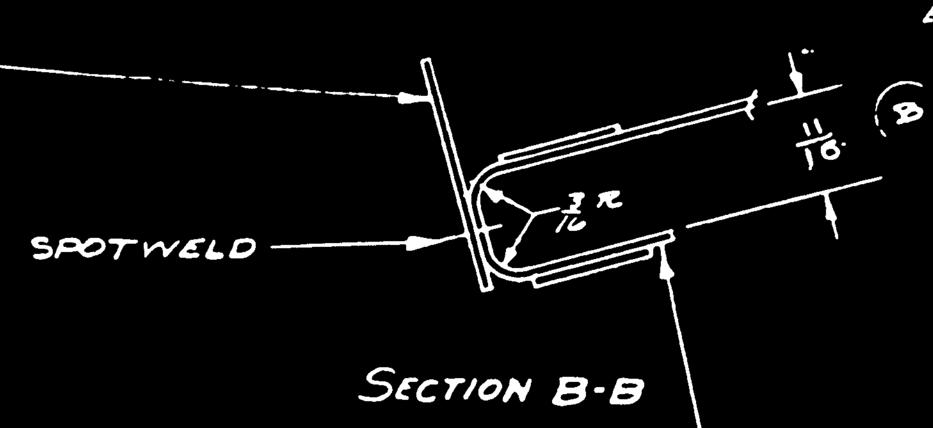

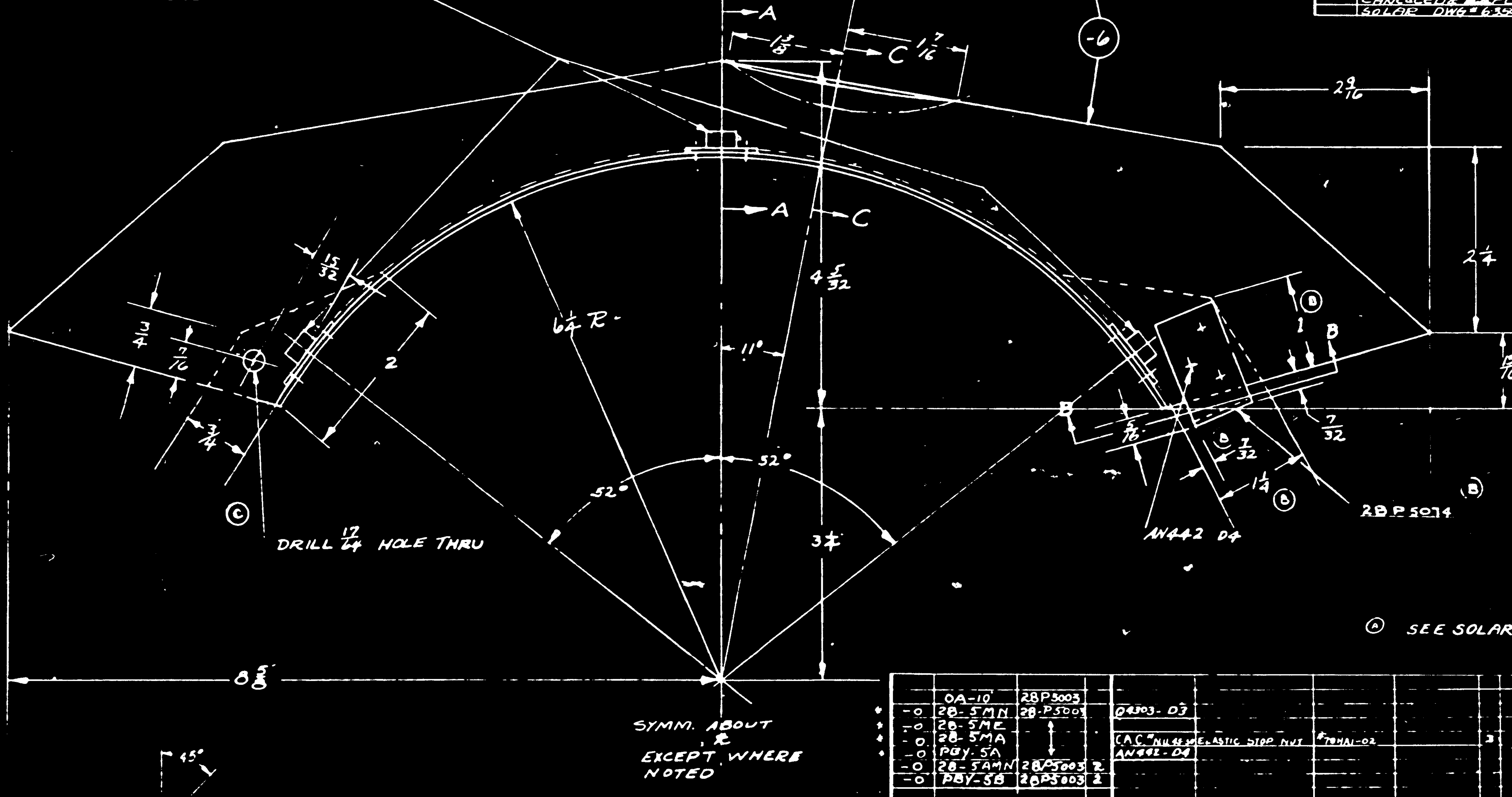

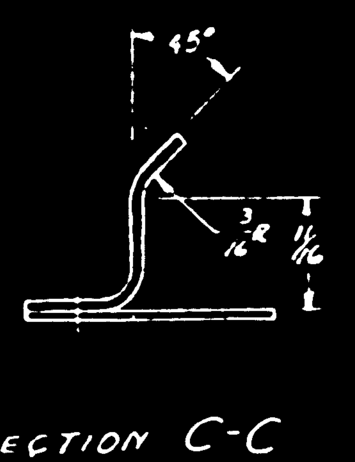

FINISH CODE	
Z	ANODIC TREATMENT
P	P 27 PRIMER
AP	ALUMINIZED PRIMER
C	CADMIUM PLATE

Ⓐ SEE SOLAR DWG NO. 6-354

* AS PER SOLAR DWG. 12-724

NOTE:
#22HAI-02 MAY BE USED AS AS ALTERNATE FOR 79HAI-02, C.AC #NU 45-50 MAY BE PURCHASED FROM ELASTIC STOP NUT CO.

ASSY DASH NO.	MODEL	NEXT ASSY	
	OA-10	28P5003	
-0	28-5MN	28-P5003	
-0	28-5ME		
-0	28-5MA		
-0	PBY-5A		
-0	28-5AMN	28P5003	2
-0	PBY-5B	28P5003	2
-0	PBY-5	28P5003	

REQUIREMENTS PER AIRPLANE

REPLACES — CALC WT 31
REPLACED BY — ACT WT
1/32 — SCALE 12" = 1'0"
STAMP PART NUMBER WHERE SHOWN

PART NO	STOCK	MATERIAL	SPEC	-0 REQ
Q4303-D3				
C.AC. #NU 45-50	ELASTIC STOP NUT	#79HAI-02		3
AN442-D4				
28P5074				1
-7	.051 x 1 1/2 x 13	ALCLAD 24ST	[illegible]	1
-6	.064 x 7 x 18	[illegible]	[illegible]	1

PARTS LIST PER ASSY (-0, -2, -3, -4, -5; LH / RH REQ)

AC —
NAVY -6 S253 — HEAT TREAT
Z-P — FINISH
DRAFT 12-2-39 — CHECK 12-14-39 — STRUCT — MAT — APPROV — ENG

ENG. FILE

NAME SUPPORT ASSEM. - OIL COOLER - FORWARD
OPP. HAND —
DWG. SIZE D — 28-0-5010
CONSOLIDATED AIRCRAFT CORP. SAN DIEGO CALIF.

28-0-5010

LET	ALTERATION	DATE	BY
	E 2805012A	H	⌀B WAS 1⅜. 7⅝ R. WAS 7⅛
	E C 20515	B	N .116 HOLE, ⅜ WAS ⅝
		C	ADDED LOCATION OF HOLES IN -8	2-20-41	SINGER
	MCR 213	D	SOLAR #1-1759 WAS 28-0-5012 ⌀		
	MCR 213-A	E	CNG 3 ARC FROM ZP-2N TO Z-P-2GP	5-6-43	NICHOLS
			REPLACED SOLAR #1-1754 WITH 2805012, REMOVED REQUIREMENTS FOR 28-5MC & 28-5AMC AS PER RELEASE RECORDS	8-26-43	RANEY

DRILL #11 (.191) 2 HOLES

DRILL #11 (.191) 2 HOLES

$4\frac{17}{32}$ $3\frac{1}{2}$ $9\frac{5}{8}$ $4\frac{3}{16}$ $1\frac{3}{4}$ $\frac{3}{8}$ $\frac{5}{16}$ $\frac{1}{2}$ $\frac{1}{4}$

DRILL $\frac{17}{64}$ THRU

HOLE THRU -6 & -7

1 AN442-D5 RIVETS

$\frac{7}{16}$ $\frac{3}{8}$ $\frac{3}{8}$ $6\frac{1}{4}$ R $5\frac{3}{32}$ 4 $7\frac{5}{8}$ R $\frac{17}{32}$ $\frac{3}{16}$

2805012

SECTION A-A

-7 REF. -6 REF.

2 $\frac{5}{8}$ $1\frac{7}{16}$ 5° $\frac{5}{8}$ $\frac{3}{16}$ R

-8 -7 -6

NOTE

H.T.-61-7 SR 53

GP-GREEN PRIME

FINISH CODE:

Z ANODIC TREATMENT

P PRIMER

A ALUMINIZED PRIMER

C CADMIUM PLATE

ASSY DASH NO.	MODEL	NEXT ASSY	REQ
	28-5MN	2805001	2
	28-5AMN		2
	28-5MA		2
	28-5ME		2
	PBY-5A	28-0-5001	2
	PBY-5B	28-0-5001	2
	PBY-5	28-0-5001	2

REQUIREMENTS PER AIRPLANE

REPLACES .32 CALC WT

REPLACED BY ACT WT

UNLESS OTHERWISE SPECIFIED SCALE 12" : 1'0"

STAMP PART NUMBER WHERE SHOWN

PART NO	STOCK	MATERIAL	SPEC	LH REQ	RH REQ	LH REQ	RH REQ	LH REQ	RH REQ	LH REQ	RH REQ
PARTS LIST PER ASSY				-0		-2		-3		-4	-5
AN442 D5											
2805012											
-8	.051 × 2⅛ × 3¼	ALCLAD 2 45T	4118 COND T	1							
-7	.051 × 2 × 10¼	ALCLAD 2450	4118 COND A	1							
-6	.051 × 2 × 10¼	ALCLAD 2450	4118 COND A	1							

A C

NAVY NOTED HEAT TREAT

Z-P: 2G FINISH

11-27-39 DRAFT

CHECK	STRUCT	MAT	APPROV	ENG.
		12/6/39		

OPP HAND

NAME SUPPORT ASSEM. OIL COOLER - REAR

CONSOLIDATED AIRCRAFT CORP. SAN DIEGO, CALIF.

DWG D SIZE 28-0-5011

ENG. FILE

1105-082

LET	ALTERATION	DATE	BY
A	28-0-5017 WAS 32-0-030	10/30/41	S. MILLER
B	-12 (3/8 X 3/4) WAS -10 (3/8 X 3/4)		
C	ADDED -15 (3/4 X 3/4 X 19 7/8) WAS -12 (3/4 X 3/4 X 23 7/8) TO -8. CHANGED DWG #	12-4-41	FRANCIS
D	CHGD REQTS OF -12 & -15 - WERE 4/SHIP EA	2-24-42	SINGER
E	ADDED -16 - 1/8 X 3/4 X 19 7/8 NEOPRENE & -17 - 1/8 X 3/4 X 21 5/8 NEOPRENE. & NOTE	4-3-42	[illegible]
F	CHG'D -12 & -15 MAT'L "FABRIC COVERED SPONGE RUBBER" TO "NYCAR SPONGE FABRIC COVERED; WT CHG NEG	5-26-42	CLARK
G	CHANGED DIM 19 3/8 TO AGREE WITH -15. NO WT. CHG.	8-7-42	[illegible]
H	26 1/2 DIM. WAS 26 3/32 DIM. WT. CHG NEG	10-6-42	SMITH
J	IN B.M. & ON FACE AT -12 & -15 REMOVED "NYCAR SPONGE FABRIC COVERED" IN B.M. FOR -12 & -15 ADDED "NOTED" IN MAT. BLK. TO FACE FOR -12 & -15 ADDED NOTE "SYNTHETIC ··· CALIF." (NO WT CHG)	7-8-43	KNIGHT

E.O. 2,761
E.O. 22163
E.O. 29577A

EQ A73315

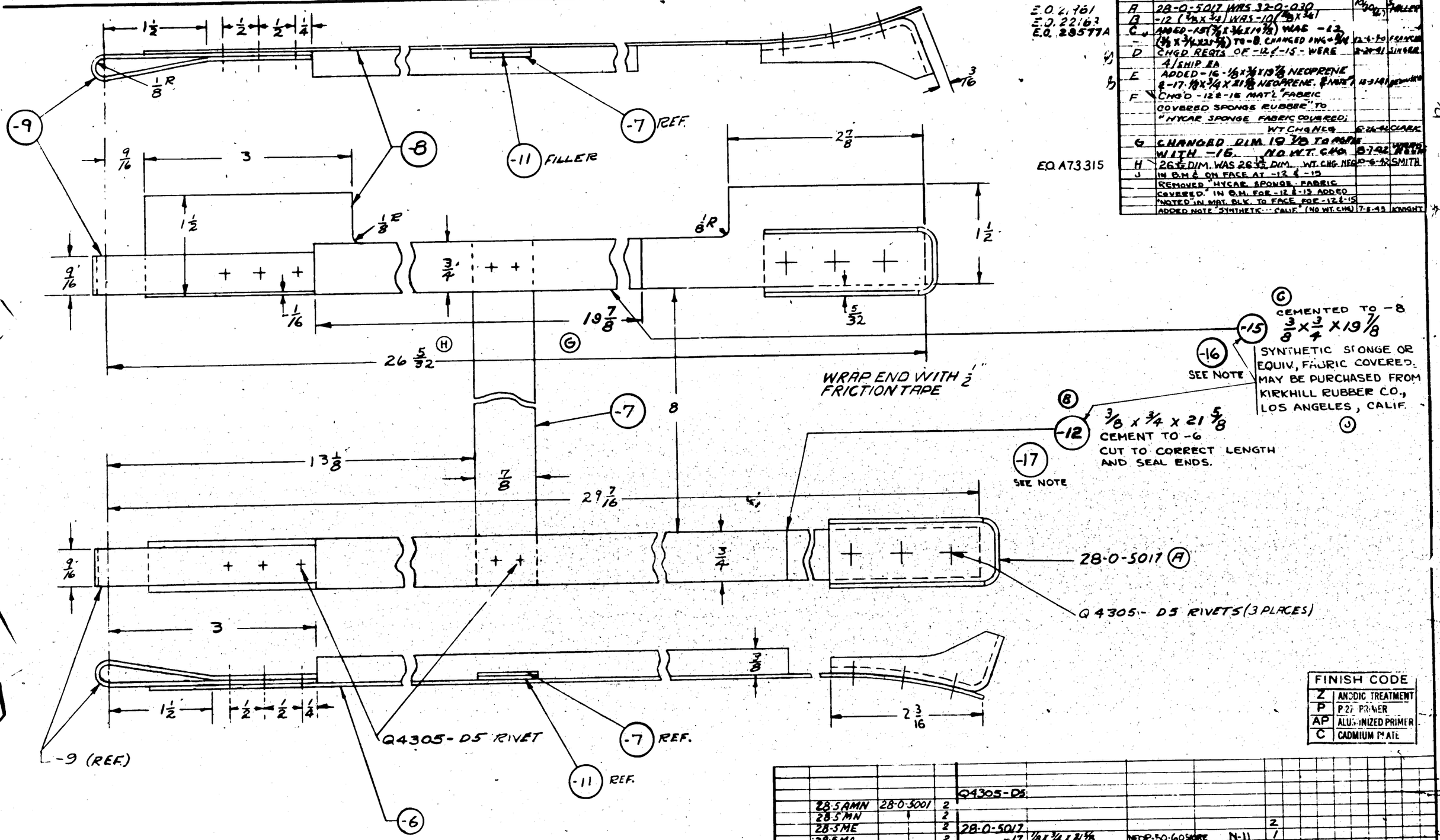

FINISH CODE	
Z	ANODIC TREATMENT
P	P-27 PRIMER
AP	ALUMINIZED PRIMER
C	CADMIUM PLATE

NOTE: (E)
1. ADD -16 NEOPRENE STRIP UNDER -15 & -17 NEOPRENE STRIP UNDER -12 WHEN REQUIRED TO PROVIDE BETTER AIR SEAL BETWEEN FAIRING & OIL COOLER

ASSY DASH NO.	MODEL	NEXT ASSY	REQ
	28-5AMN	28-0-5001	2
	28-5MN		2
	28-5ME		2
	28-5MA		2
	PBY-5A		2
	PBY-5B		2
	PBY-5	28-0-5001	2

REQUIREMENTS PER AIRPLANE

REPLACES — CALC WT .62

REPLACED BY — ACT WT

LIMIT ON DECIMALS UNLESS OTHERWISE SPECIFIED 1/32 — SCALE 12"=1'0"

STAMP PART NUMBER WHERE SHOWN

Q4305-D5

PART NO	STOCK	MATERIAL	SPEC	LH REQ. -0	RH REQ. -2	LH REQ. -3	RH REQ. -4	LH REQ. -5	RH REQ.
28-0-5017					2				
-17	1/8 X 3/4 X 21 5/8	NEOP-50-60 SHORE	N-11		1				
-16	1/8 X 3/4 X 19 7/8	NEOP 50-60 SHORE	N-11		1				
-A5	3/8 X 3/4 X 19 7/8	[illegible]			1				
-12	3/8 X 3/4 X 21 5/8	NOTED			1				
-11	.064 X 1/8 X 3/4	ALCLAD 24ST	4AB COND'T		2				
-9	.064 X 9/16 X 7	ALCLAD 24ST	4AB COND'T	2					
-8	.072 X 1 1/2 X 26	ALCLAD 24ST	4AB COND'T	1					
-7	.040 X 7/8 X 9 9/16	ALCLAD 24ST	4AB COND'T	1					
-6	.072 X 3/4 X 29	ALCLAD 24ST	4AB COND'T	1					

PARTS LIST PER ASSY.

AC		11-29-39	12/4/39
NAVY NONE	Z-P-AP		DUNCAN
HEAT TREAT	FINISH	DRAFT	CHECK

STRUCT	MAT	APPROV	ENG.
		3	
12/13/39	12/27/39		

NAME STRAP ASSEM. OIL COOLER

OPP HAND —

CONSOLIDATED AIRCRAFT CORP. SAN DIEGO, CALIF.

DWG D SIZE — 28-0-5013

28-0-5013

LET	ALTERATION	DATE	BY
A	3/8 WAS 5/4 & VIEWS C-C & D-D AS SHOWN	11-1-40	WILSON
B	WAS	1-27-41	HOLME
C	REMVD. 1 5/8, & 7/16 LOC. DIMS FOR #11 HOLES. ADDING "ON INST." TO DRILL NOTE. Removed Sec B-B.	2-25-41	Dunnack
D	IN VIEW C-C & DD 9/32 DIMS. WERE 1/4	2-25-41	Dunnack
E	DIM'S. 13 21/32 WAS 13 5/8, 2 21/32 WAS 2 11/16, 9/16 WAS 5/16, 5 1/32 WAS 1 3/16, 2 7/8 WAS 2 3/4, 1 9/32 WAS 1 11/16, 1 3/4 (2) WAS 1 1/2 & 2 1/64 (2) WAS 9/32 - NEG. WT. CHG.	7-16-42	HINES

E.O. 20966

E.O. 53134
E.O. A16755

E.O. A49168

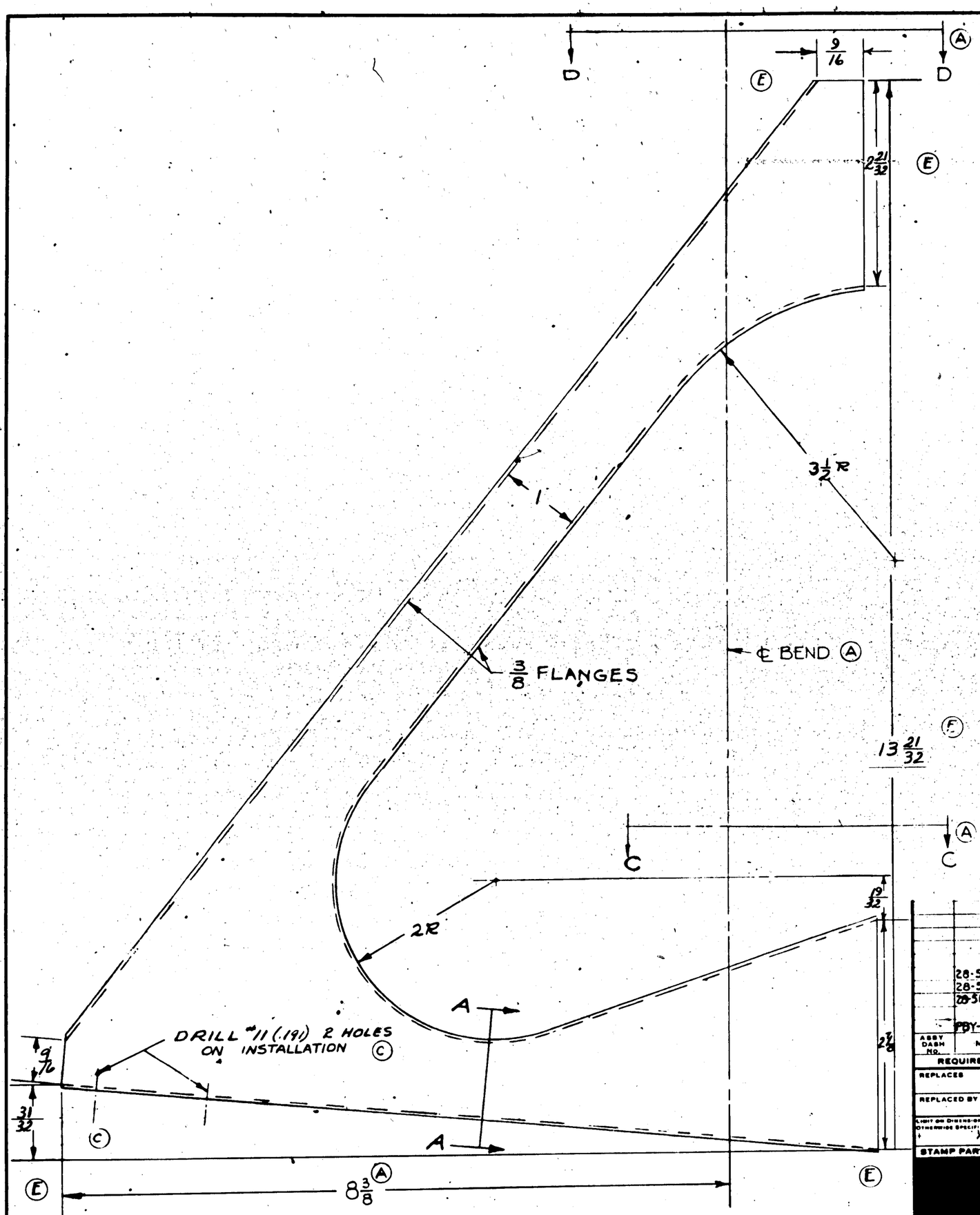

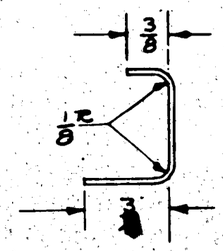

SECTION A-A

FINISH CODE	
Z	ANODIC TREATMENT
P	P-27 PRIMER
AP	ALUMINIZED PRIMER
C	CADMIUM PLATE

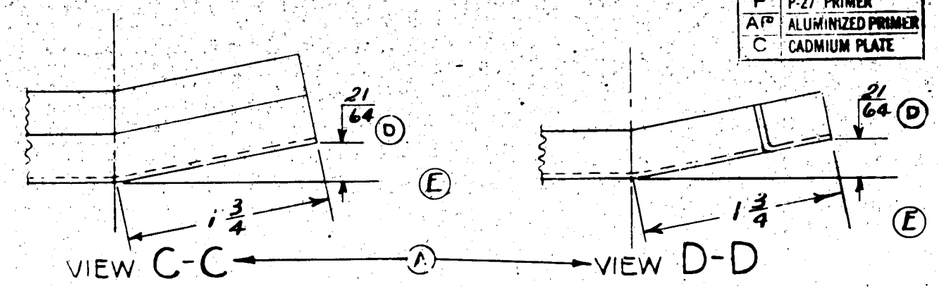

ASSY DASH NO.	MODEL	NEXT ASSY	REQ
	28-5MC, AMC	28-0-5515	2 ea.
	28-5MN, AMN	28-0-5001	2 ea.
	28-5MA, ME		2 ea.
	PBY-5, 5A, 5B	28-0-5001	2 ea.

REQUIREMENTS PER AIRPLANE

REPLACES — CALC. WT.

REPLACED BY — ACT. WT.

ALLOW ON DIMENSIONS UNLESS OTHERWISE SPECIFIED ± 1/32

SCALE 12" = 1'0"

STAMP PART NUMBER WHERE SHOWN

PART NO	STOCK	MATERIAL	SPEC.	LH REQ.	RH REQ.	LH REQ.	RH REQ.	LH REQ.	RH REQ.	LH REQ.	RH REQ.	LH REQ.	RH REQ.
	.051 x 12 x 17	ALCLAD 2430 42AR QQ-A-200/3											

PARTS LIST PER ASSY. -0 -2 -3 -4 -5

AC		11-27-39	8-1039		
NAVY SR-53	Z-P		DUNCAN		3
HEAT TREAT	FINISH	DRAFT	CHECK	STRUCT	MAT'L	APPROV

NAME BRACKET - OIL COOLER SUPPORT

OPP. HAND —

CONSOLIDATED AIRCRAFT CORP. SAN DIEGO, CALIF.

DWG. SIZE D

28-0-5014

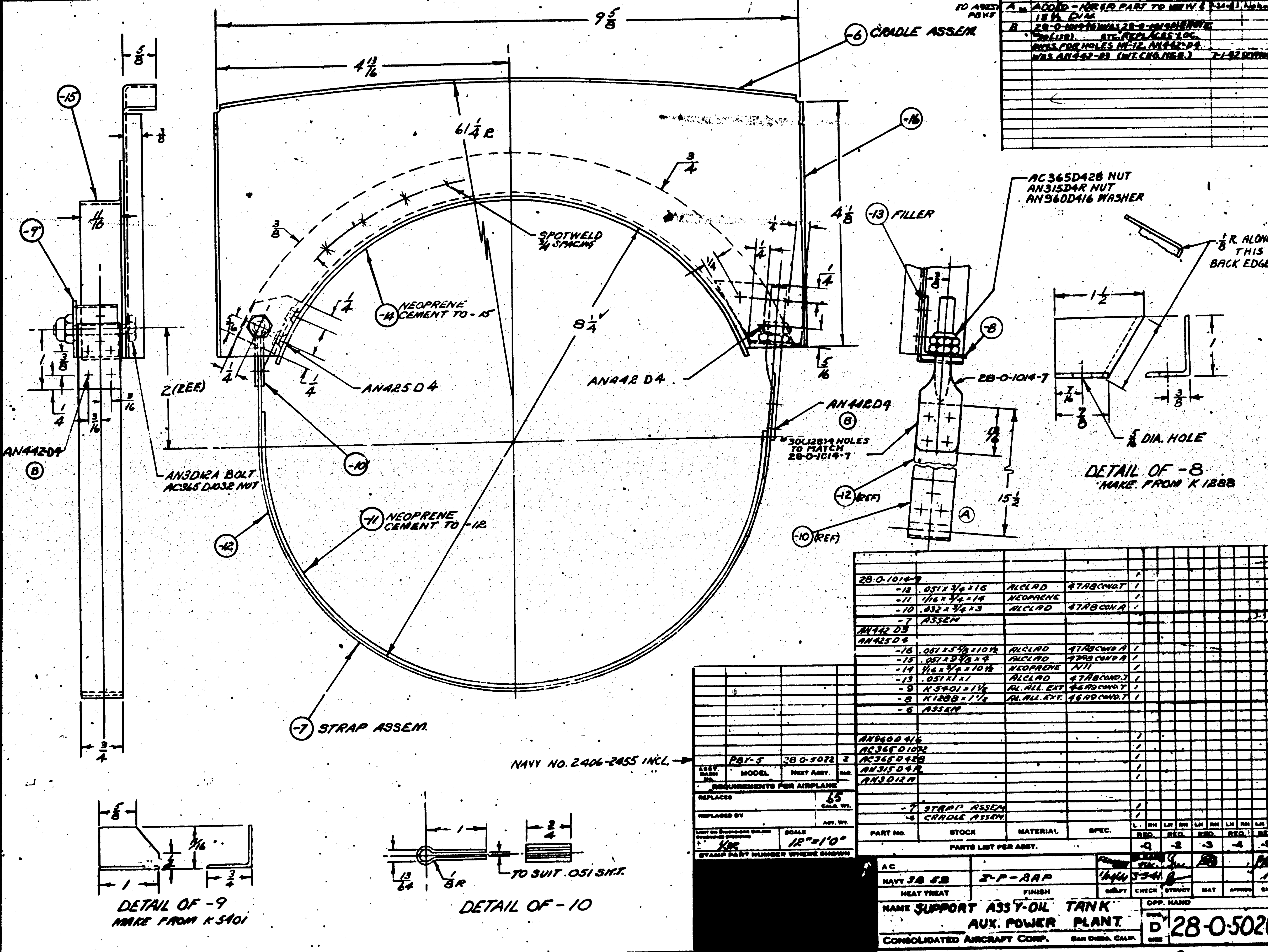

LET	ALTERATION	DATE	BY
A	ADDED -10 REF PART TO VIEW & 15 1/2 DIM.	2-24-41	
B	28-0-1014-7 WAS 28-0-... ETC. REPLACES LOC. DIMS. FOR HOLES IN -12, AN442-D4 WAS AN442-D3 (WT. CHG. NEG.)	7-1-42	

EO A9237 PBY-5

PART No.	STOCK	MATERIAL	SPEC.	REQ. -Q	REQ. -2	REQ. -3	REQ. -4	REQ. -5
28-0-1014-7								
-12	.051 x 3/4 x 16	ALCLAD	47A8 COND.T	1				
-11	1/16 x 3/4 x 14	NEOPRENE		1				
-10	.032 x 3/4 x 3	ALCLAD	47A8 CON.A	1				
-7	ASSEM							
AN442 D3								
AN425 D4								
-16	.051 x 5 5/8 x 10 1/2	ALCLAD	47A8 COND A	1				
-15	.051 x 9 5/8 x 4	ALCLAD	47A8 COND A	1				
-14	1/16 x 3/4 x 10 1/2	NEOPRENE	N11	1				
-13	.051 x 1 x 1	ALCLAD	47A8 COND.T	1				
-9	K5401 x 1 1/2	AL. ALL. EXT	46A9 COND.T	1				
-8	K1288 x 1 1/2	AL. ALL. EXT.	46A9 COND.T	1				
-6	ASSEM							
AN960D416				1				
AC365D1032				1				
AC365D428				1				
AN315D4R				1				
AN3D12A				1				
-7	STRAP ASSEM			1				
-6	CRADLE ASSEM.			1				

PARTS LIST PER ASSY.

ASSY. DASH No.	MODEL	NEXT ASSY.	REQ.
	PBY-5	28-0-5022	2

REQUIREMENTS PER AIRPLANE

REPLACES	65 CALC. WT.
REPLACED BY	ACT. WT.
LIMIT ON DIMENSIONS UNLESS OTHERWISE SPECIFIED ± 1/32	SCALE 12" = 1'0"

STAMP PART NUMBER WHERE SHOWN

AC		
NAVY SB 5B	Z-P-8AP	
HEAT TREAT	FINISH	DRAFT / CHECK / STRUCT / MAT / APPROV. / ENG.

NAME SUPPORT ASSY-OIL TANK AUX. POWER PLANT

OPP. HAND

DWG. SIZE D 28-0-5020

CONSOLIDATED AIRCRAFT CORP. SAN DIEGO, CALIF.

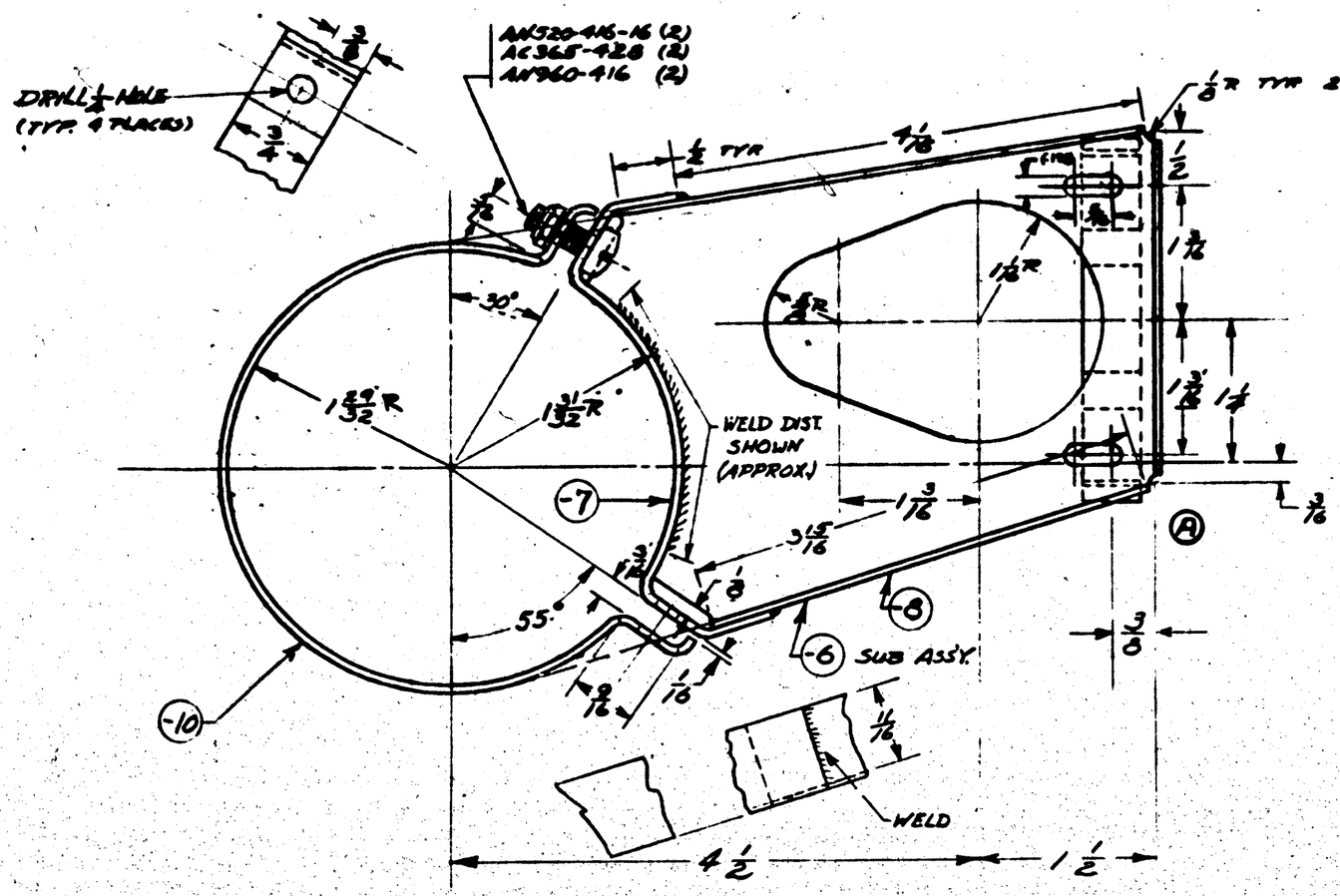

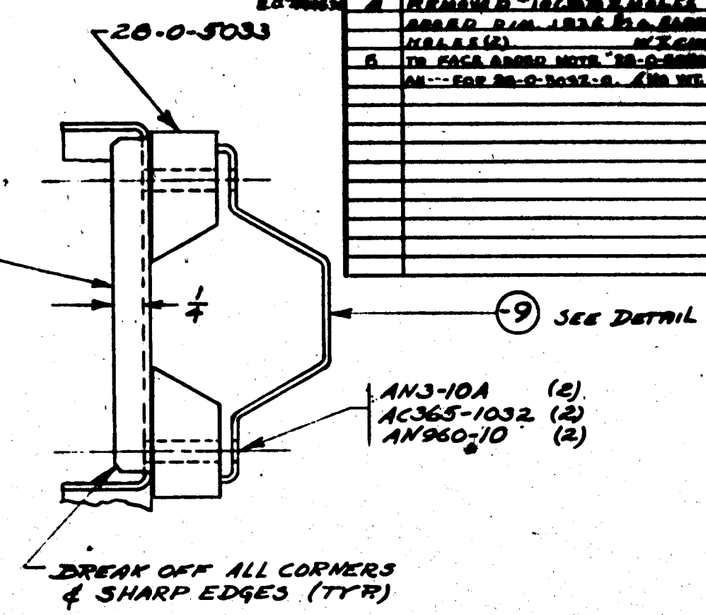

LET'R	ALTERATION	DATE	BY
A	REMOVED "10 (.193) DRILL & MADE 4 HOLES (2) W/ CLEARANCE	7-12-43	
B	TO FACE ADDED NOTE "28-0-5050-0	7-2-44	

Ⓑ 28-0-5050-0 IS AN INTERCHANGEABLE ALTERNATE FOR 28-0-5032-0.

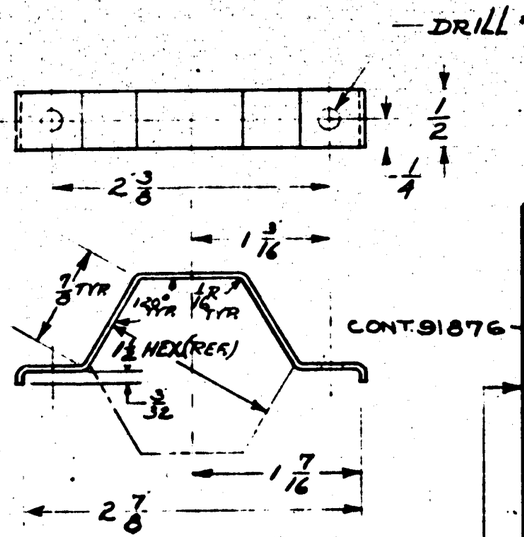

DETAIL -9 CLAMP

FINISH CODE	
Z	ANODIC TREATMENT
P	P-27 PRIMER
AP	ALUMINIZED PRIMER
C	CADMIUM PLATE

CONT. 91876

CONTRACT "88176

PART NO.	STOCK	MATERIAL	SPEC.	LH REQ. -0	RH REQ. -0	LH REQ. -2	RH REQ. -2	LH REQ. -3	RH REQ. -3	LH REQ. -4	RH REQ. -4	LH REQ. -5	RH REQ. -5
PARTS LIST PER ASSY.													
-8	.050 x 5 1/2 x 5 1/2	CM. SHT. STL.	AN-QQ-S-685A	1									
-7	.062 A-36 K7	CM. SHT. STL.	AN-QQ-S-685A			1							
	PARTS ON -6 SUB ASS'Y.												
AC365-428				2									
AC365-1032						2							
AN960-416								2					
AN960-10										2			
AN520-416-16												2	
AN3-10A													2
28-0-5033													2
-10	.062 x 5 x 5	CM. SHT. STL.	AN-QQ-S-685A	1									
-9	.062 x 1 1/8 x 4 1/8	CM. SHT. STL.	AN-QQ-S-685A			1							
-6	SUB ASSY.												

ASSY. DASH NO.	MODEL	NEXT ASSY.	REQ'D.
	28-5033		2
	28-5AMN		2
	28Y-5B		2
	28Y-5A	28R30K	2

REQUIREMENTS PER AIRPLANE

REPLACES 28Y 3124-36

FOR MODELS NOTED

CALC. WT.

REPLACED BY

ACT. WT.

LIMIT OF DIMENSIONS UNLESS OTHERWISE SPECIFIED ± 1/32

SCALE 12" = 1'0"

STAMP PART NUMBER WHERE SHOWN

AC 30365-118,000 NAVY (STD. SHEET)

HEAT TREAT

C-2AP (STL. PARTS)

FINISH

A3-42

DRAFT

Uyeyama CHECK KAREL STRUCT

KAREL ENGR.

APPROV.

DEPT. APPROV.

DEPT. HAND

NAME SUPPORT — VACUUM PUMP RELIEF VALVE

CONSOLIDATED AIRCRAFT CORP. SAN DIEGO, CALIF.

DWG. SIZE D

28-5032

R

LET	ALTERATION	DATE	BY

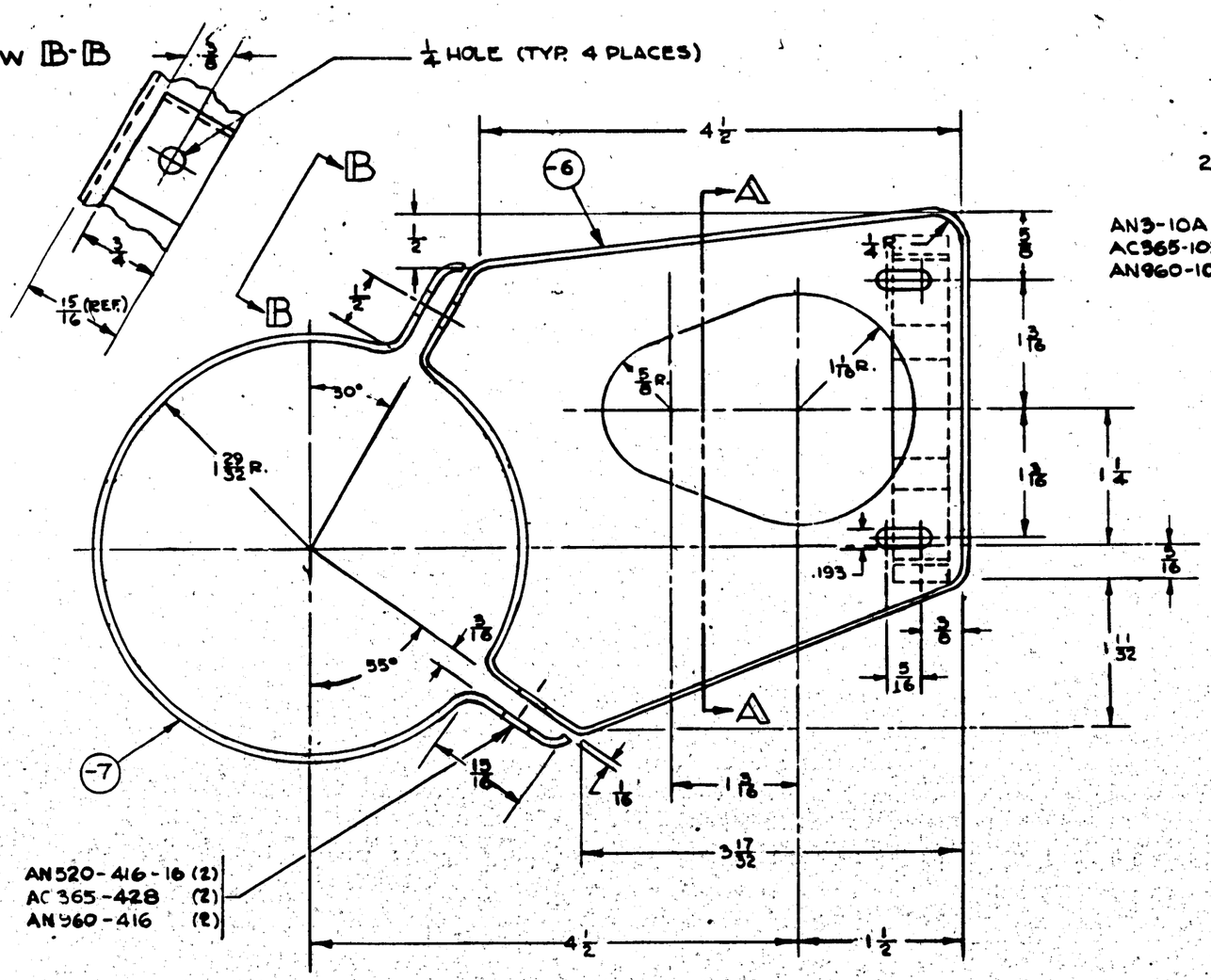

AN520-416-16 (2)
AC365-428 (2)
AN960-416 (2)

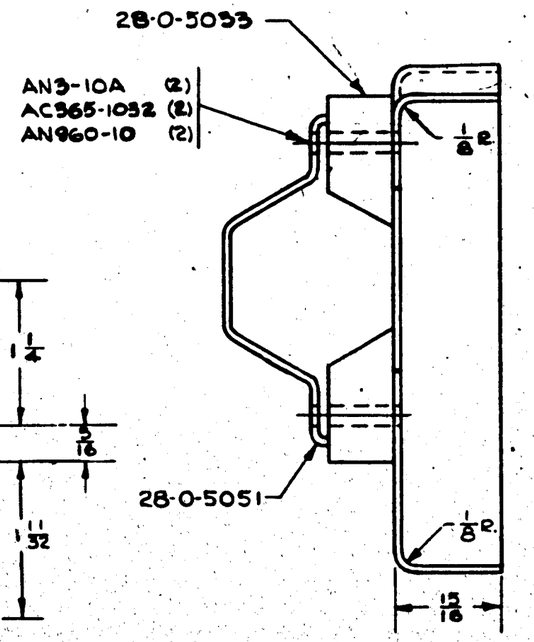

SECTION A-A

NOTES:-
1.-ALL UNSPECIFIED BEND RADII TO BE 3/16.
2.-28-0-5050-0 IS AN INTERCHANGEABLE ALTERNATE FOR 28-0-5052-0.

C-NOA 5468
C-88478
C-91876

4 DIV. DASH NO.	MODEL	NEXT ASSY.	REQ.	PART No.	STOCK	MATERIAL	SPEC.	LH REQ.	RH REQ.	LH REQ.	RH REQ.	LH REQ.	RH REQ.	LH REQ.	RH REQ.	LH REQ.	RH REQ.
	28-5AMN	28F3076	2	AC365-428					2								
	PBY-5B	28F3076	2	AC365-1032					2								
	PBY-5A	28F3076	2	AN960-416					2								
	PBY-5	28F3076	2	AN960-10					2								
				AN520-416R16					2								
				AN3-10A					2								
				28-0-5053					2								
				28-0-5051					1								
				-7	.063 X 5 X 11	C.M.STL. SHT.	AN-QQ-S-685		1								
				-8	.050 X 7 X 7 1/4	C.M. STL. SHT.	AN-QQ-S-685		1								
				PART No.	STOCK	MATERIAL	SPEC.	LH REQ.	RH REQ.	LH REQ.	RH REQ.	LH REQ.	RH REQ.	LH REQ.	RH REQ.	LH REQ.	RH REQ.
				PARTS LIST PER ASSY.				-0		-2		-3		-4		-5	

REQUIREMENTS PER AIRPLANE

REPLACES — GMC. WT. .75

REPLACED BY — ADV. WT.

SCALE 12" = 1'0"

± 1/32

STAMP PART NUMBER WHERE SHOWN

AC — KNIGHT

10000 - 19999 NAVY (STL. PARTS) — CP-28P (STL. PARTS) — 6-23-43

HEAT TREAT — FINISH — DRAFT — CHECK — STRUCT — MAT — APPROV — ENG.

NAME BRACKET - VACUUM PUMP RELIEF VALVE

OPP. HAND

SIZE D — DWG. 28-0-5050

CONSOLIDATED VULTEE AIRCRAFT CORP. SAN DIEGO DIVISION . . SAN DIEGO, CALIF.

APPROVED FOR TOOLING BY Gardiner 7-28-43

R0605-082

LET	ALTERATION	BY	DATE	BY
A	[illegible]		[illegible]	
B	[illegible]		[illegible]	
C	[illegible]		[illegible]	
D	ADDED AN425D3 TO -6 CTSK OUTSIDE & TO -7 CTSK INSIDE. REVISED PER E.O. 27154		6-18-41	

28-5 ALL E.O. A-8646

E.O. 27154

SECTION C-C
FULL SIZE

SECTION B-B
FULL SIZE

SECTION A-A
FULL SIZE

-7 BAND

-6 WELL

7/32 DRILL 4 HOLES SPACED AS SHOWN TO MATCH WITH 28-0-2013

(D) AN425-D3 C'TSK OUTSIDE

(D) AN425-D8 C'TSK INSIDE

(B) 1 DIA. 12 HOLES EQUALLY SPACED (SAME SPACING AS AT OTHER END.)

SPOTWELD -7 TO -6 SPACING APPOX. 1

(A) BUTT JOINT

TAPER TO 4 1/2 DIA. AT OPPOSITE END

TAPER TO 4 23/32 DIA. AT OPPOSITE END

SPOTWELD (SPACE APPR 1)

1 DIA. 6 HOLES EQUALLY SPACED AS SHOWN.

DOUGGLE

ASSY. DASH No.	MODEL	NEXT ASSY.	REQ.
	28-5ME	28-0-6528	2
	PBY-5	28-0-6512	2
	PBY-5A	28-0-6512	2
	PBY-5A	28-0-6513	2
	28-5MC	28-0-6512	2
	28-5MC	28-0-6512	2

REQUIREMENTS PER AIRPLANE

REPLACES

REPLACED BY

.138 GALS. WT.

ADV. WT.

SCALE 6"=1'-0" & NOTED

+ 1/64 - 1/32

STAMP PART NUMBER WHERE SHOWN

AN425-D3

-7 .040X16½X1 24ST ALC 61AB COND'T

28-0-3314-6 .040X16½X41½ 24ST ALC TEMP COND'T

PART No.	STOCK	MATERIAL	SPEC.	LH RH REQ. -0	LH RH REQ. -2	LH RH REQ. -3	LH RH REQ. -4	LH RH REQ. -5

PARTS LIST PER ASSY.

A C

NAVY NONE

HEAT TREAT

Z (PROBABLE)

FINISH

3-14-41 K Baum

HILL BK.

DRAFT CHECK STRUCT. MAT SPVSOR ENG.

OPP. HAND

NAME WELL ASSEMBLY.- OIL TANK

CONSOLIDATED AIRCRAFT CORP. SAN DIEGO, CALIF.

SPEC. D

DWG. 28-0-5511

SHIPS c.91876

c.98476

MCR 306 & ON

LET	REVISIONS	DATE	BY
A	ADDED 1 5/8 DIA. NO WT CHG.	2-2-43	

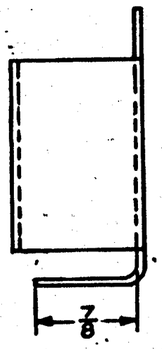

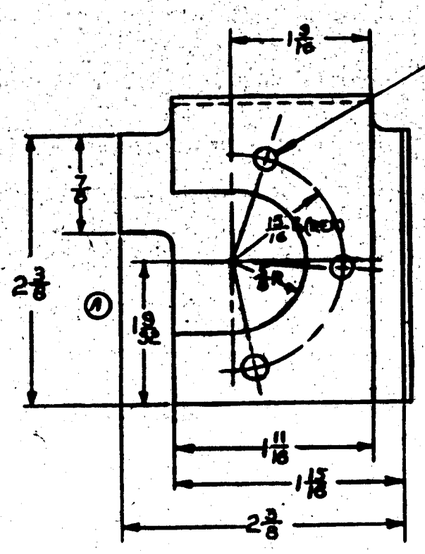

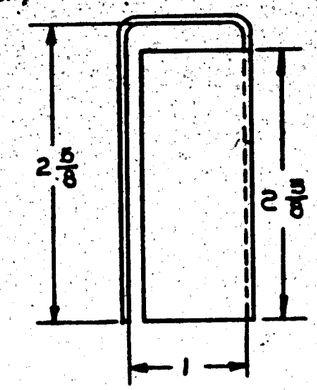

NOTE
ALL BEND & RELIEF RADII 1/8

MCR 306 & ON

APPROVED FOR TOOLING BY
Gerstine 2-26-43

PBY-5A	280-5527-5		
MODEL	NEXT ASSY.		
REQUIREMENTS PER AIRPLANE			
REPLACES	.079 SHT. WT.		
REPLACED BY	ASY. WT.		
SCALE 12" = 1'-0"			

PART No.	STOCK	MATERIAL	SPEC.	LH REQ.	RH REQ.	LH REQ.	RH REQ.	LH REQ.	RH REQ.	LH REQ.	RH REQ.	LH	RH
PARTS LIST PER ASSY.				-0	-2	-3	-4						

AC		DESIGN					
NAVY NONE	Z	9-12-42	9-1-43				
HEAT TREAT	FINISH	DRAFT	CHECK	STRUCT	MAT	APPROV	ENG.

OPP. HAND

NAME BAFFLE-OIL RETURN LINE

SIZE D

280-5527

R 280-5527

LET	ALTERATION	DATE	BY
G	TRACED. NO WT. CHG.	3-17-53	[illegible]
H	REV'D. -6 REPLACED WITH -8. ADDED MAT'L FOR "O" - .032 [illegible]		
	[illegible]	7-18-53	[illegible]

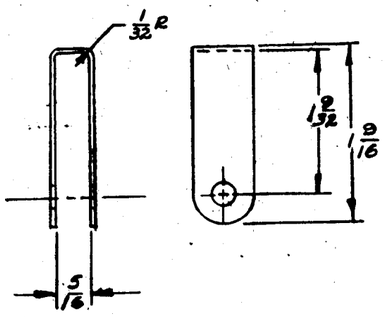

DETAIL -0

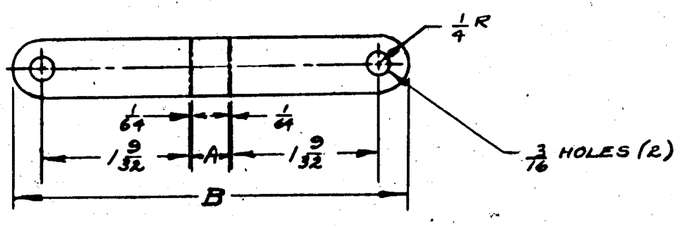

FLAT PATTERN -0 & -7

DASH NO.	"A"	"B"
-0	5/16	3 17/32
-7	1 1/16	4 5/32

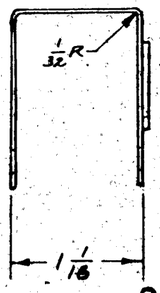

-2 ASSEM.

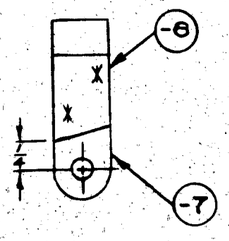

-3 ASSEM.

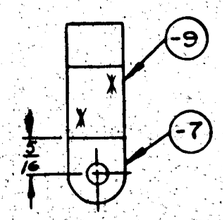

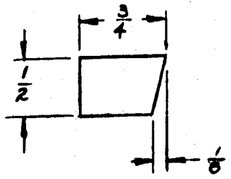

DETAIL -8

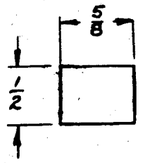

DETAIL -9

FINISH CODE	
Z	ANODIC TREATMENT
P	P-27 PRIMER
GP	GREEN PRIMER
C	CADMIUM PLATE

ASSY. DASH NO.	MODEL	NEXT ASSY.	REQ.
-0	XPB2Y	33A674	1
-0	PBY-5A	28G1068	2
-0	PBY-5	28G1068	2
-0	PBY5AMC(MM)	28P5004	2 REF
-0	PBY5ME(MM)	28P5004	2 REF
-0	PBY-5NA(MM)	28P5004	2 REF
-0	PBY-5SA(SA)	28P5004	2 REF
-3	[illegible]	32P007	2 REF
-3	X824	32P007	2 REF
-2	824, BMA	32P007	2 REF
-0	PBY5A	28G1033	2
-0	PB-[illegible]	28G1069	2 REF
-0	PBY-5, 5A, 5B	28G1069	2 REF
-0	28-5[illegible]	28G1033	2 REF
-0	PBY-5	28G1033	2
-0	PBY-[illegible]	28G1033	2
-0	XPB2Y-1		
-0	PBY-1, 2, 3	SEE	
-0	PBY-3, 4	MATERIAL	
-0	PBY-1, 2, -2	SHEET	
-0	XPBY-		

C-70496 (77713)
C-70496 [illegible]
C-70496 [illegible]
C-70496 (77713)

REQUIREMENTS PER AIRPLANE

REPLACES 22P557-1-20-39 — CALC. WT. .01

REPLACED BY — ACT. WT. .01

UNLESS OTHERWISE SPECIFIED: ± .032 — SCALE 1"=1'0"

STAMP PART NUMBER WHERE SHOWN

PART No.	STOCK	MATERIAL	SPEC.	LH REQ.	RH REQ.	LH REQ.	RH REQ.	LH REQ.	RH REQ.	LH REQ.	RH REQ.	LH REQ.	RH REQ.
-9	.064 X 1 1/2 X 3/4	ALCLAD	47A8-COMBT										
-8	.064 X 3/8 X 1 1/2	ALCLAD	47A8-COMBT										
-7	.080 X 5 1/2 X 4 3/32	AL. AL. SHT.	47A10-COMB A										
-0	.030 X 5 1/2 X 3 5/32	AL. AL. SHT.	47A10-COMB A										

PARTS LIST PER ASSY.

AC		D						LCM	
NAVY 3R53	Z-P-2A	1-20-53						2-21-53	
HEAT TREAT	FINISH	DRAFT	CHECK	STRUCT	MAT	APPROV	ENG.		

NAME GUARD - ENGINE CONTROL - SPECIAL

OPP. HAND

CONSOLIDATED VULTEE AIRCRAFT CORP. SAN DIEGO DIVISION . . SAN DIEGO, CALIF.

DWG. D — 22P557

LET	ALTERATION	DATE	BY
	SUPPLIES & EQUIPMENT CLASSIFICATION		
E	TRACED	[illegible]	[illegible]
F	CHGD 24SO & COND. A W-3 [illegible]	[illegible]	[illegible]
	COND'T'S ADDED SPEC. T6-2	11/1/40	[illegible]
G	AL. ALL. NUTPLATE AC366DF1032	[illegible]	[illegible]
	CHG'D TO STEEL NUTPLATE AC366F1032		
	Q7103-N1 (11 REQ) ADDED.		
H	MATERIAL OF -2 & -3 CHG'D	3-20-41	[illegible]
	FROM 24SO COND. A TO 24ST		
	COND. T.		
I	REPLACE (6) AC366DF1032 WITH	4-8-41	[illegible]
	(6) AC366F1032. (11) Q7103-N1		
	WITH (6) Q7103-N1		
J	CHG'D MAT'L FROM ST TO SO NO		
	WT. CHG.	3-25-41	[illegible]

E.O. 21400

PBY-5 & FUT.

PBY-5 E.O. 32600

PBY-5 & 28-6 E.O. 39335

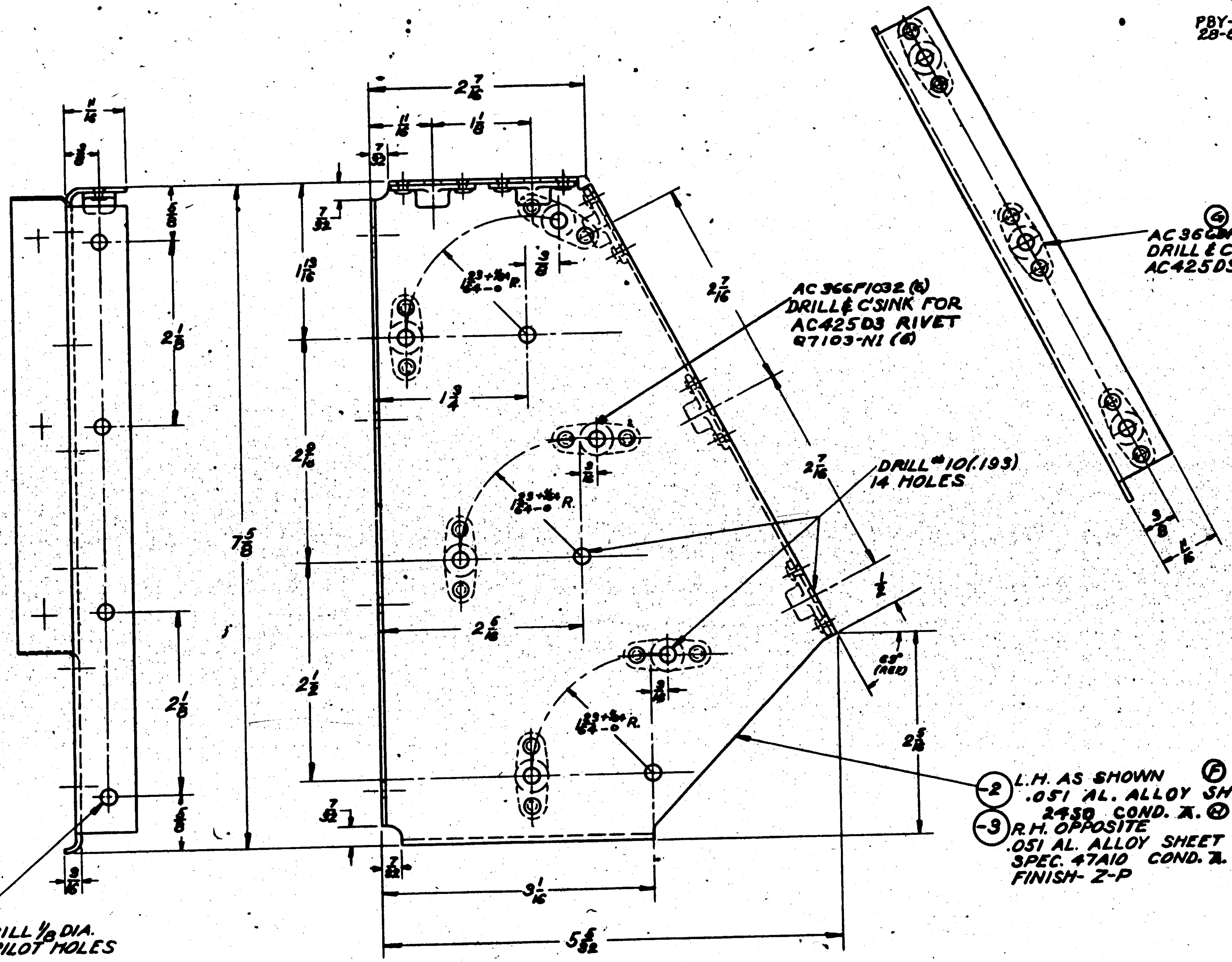

ALL BEND RADII 3/32

FINISH ASSEMBLY - 2 ~~AN~~ GP

GP-(GREEN PRIME

[redacted]

-2	[illegible]	28P036	1EA.							
-2	[illegible]	28P036	1EA							
-2	PBY-5A [illegible]	28P036	1EA.							
-1	PBY-5	28P036								
-1	PBY-4	28P036								
	PBY-4	28P036								
-1	PBY-3	28P036								
	PBY-3	28P036								
-1	PBY-2	28P036		AC366F1032	5	5				
	PBY-2	28P036		Q7103-N1	6	6				
-1	PBY-1	28P036		AC425D3	22	22	[redacted]			1
	PBY-1	28P036		AC366F1032	6	6	[illegible]	1		
D.H.	MODEL	NEXT ASSY.	REQ.	STD PARTS	L.H. REQ.	R.H. REQ.	PART NO.	L.H. REQ.	R.H. REQ.
	REQUIREMENTS FOR AIRPLANE			MAT.			PARTS LIST FOR ASSY.		

REPLACES 28P037 4-9-34

REPLACED BY

LIMIT ON DIMENSIONS UNLESS OTHERWISE SPECIFIED ± 1/64

[redacted]

APPROVED [illegible] 4-22-37 DATE

CALC.WT. .26 ACT.WT.

SCALE 12" = 1'0"

AC

NAVY NOTED

MATERIAL NOTED

SPEC. [illegible] NOTED [illegible]

CONSOLIDATED AIRCRAFT CORP. BUFFALO, N.Y.

STAMP PT. NO. WHERE SHOWN

NAME PLATE-ENG. CONT[illegible] PULLEY BRACKET [illegible]

[illegible]037-1

[illegible]37

SUPPLIES & EQUIPMENT CLASSIFICATION			
LET	ALTERATION	DATE	BY
F	TRACED	4-28-37	[redacted]
G	ADDED PBY-4 REQ. - ADDED ALTN:		
	5/16 DIA HOLE, ETC. " — -2, -3,		
	-4 & -5 SPEC. TYPE WAS FBG	H9-38	[redacted]
H	3 AER HOLES & PLCS. WAS 5/32	8-6-41	[redacted]
	SLOTS 4 PLCS. REMOVED SLOT		
	NOTE. REQTS PER AIRPLANE		
	BROUGHT TO DATE.		

C.O. 5166 P

ED. A11257

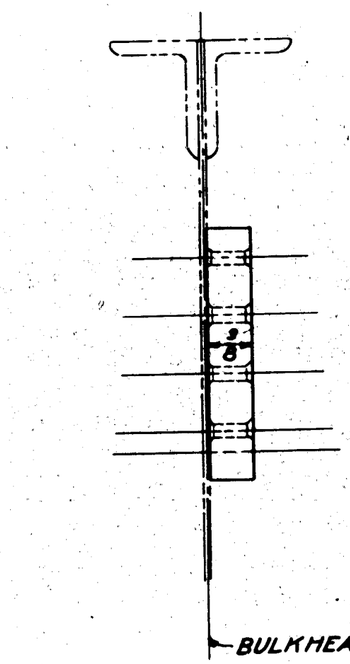

SIDE VIEW

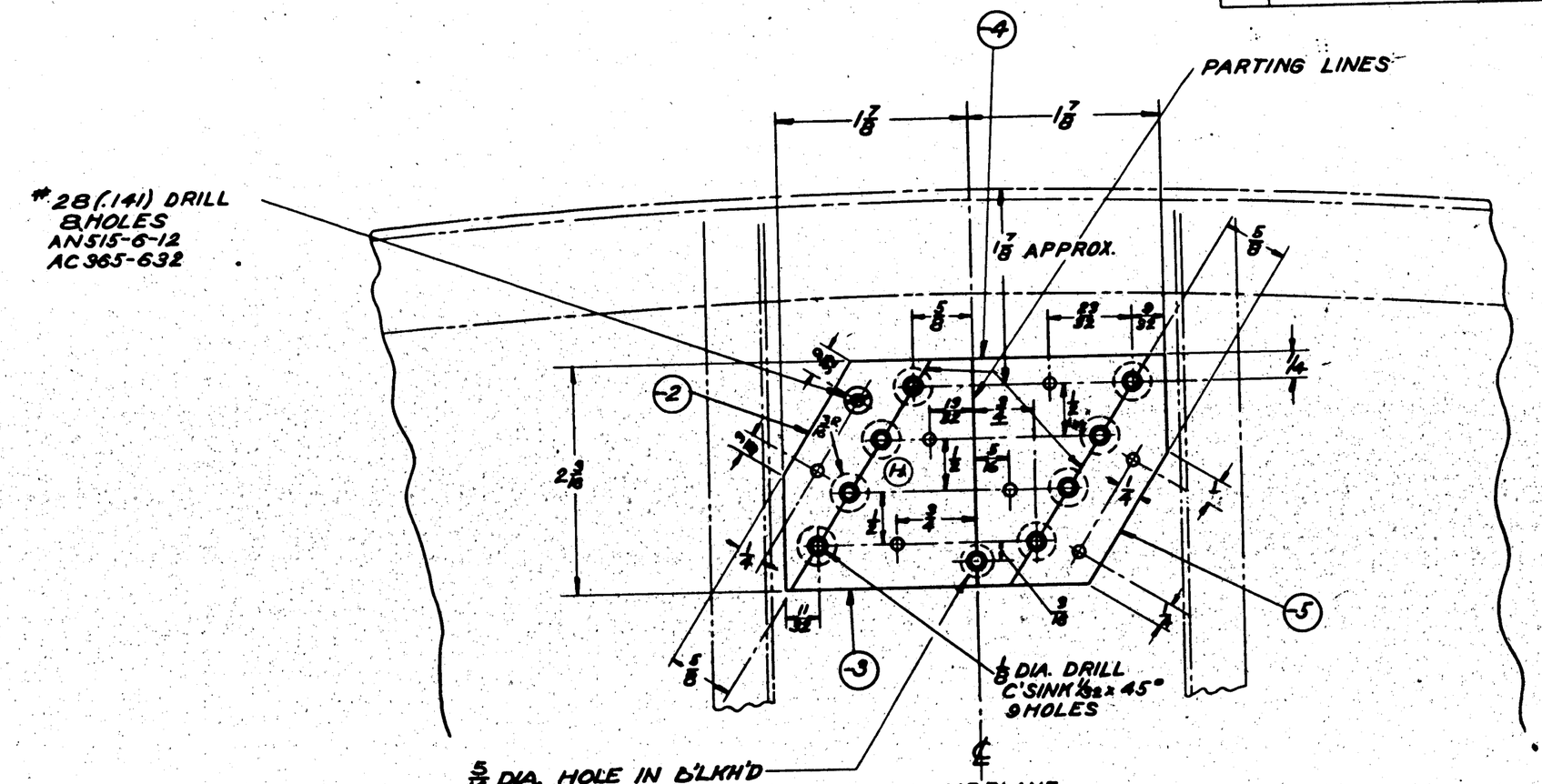

VIEW LOOKING FORWARD

NOTE- (-2) (-3) (-4) (-5) MATERIAL TO BE PHENOLIC - SPEC. 17P5 - TYPE PBG

G

O.N.	MODEL	NEXT ASSY.	REQ.	ST'D PARTS	LH REQ.	RH REQ.	PART NO.	LH REQ.	RH REQ.
	PBY-5B	28P5005	1						
	28-5AMC								
	28-5MN								
	28-5ME								
	28-5MC								
	28-5MA								
	PBY-5A		1						
	PBY-5	28P5005							
	PBY-4	28P3008							
	PBY-3	28P3008							
	PBY-2	28P1008					-5	1	
	PBY-1	28P1008		AC365-632	8		-4	1	
	XPBY-1	28P1002		AN515-6-12	8		-3	1	
							28P1089-2	1	

REQUIREMENTS PER AIRPLANE | MAT. | PARTS LIST PER ASSY.

REPLACES

REPLACED BY

LIMIT ON DIMENSIONS UNLESS OTHERWISE SPECIFIED ± 1/32

APPROVED [redacted] 28-37 DATE

.16 CALC. WT. | ACT. WT.

SCALE 12" = 1'-0"

AC

NAVY NOTED — MATERIAL

NOTED — SPEC. | NONE — HEAT TREAT | NONE — FINISH

H1-38 | 4-30-37 | Miller | DRAFT | CHECK | EXAM. | ENG.

CONSOLIDATED AIRCRAFT CORP. BUFFALO, N.Y.

STAMP PT. No. WHERE SHOWN

NAME INSTALLATION ENG. CONTROLS CABLE FAIRLEAD (BULKHEAD #2)

OPP. HAND

SIZE D

28P1089

LET	ALTERATION	DATE	BY
F	TRACED.	7-6-43	ROSS
G	REM'D DETAIL DIMS. -2 & -3. CREATED SHEET 2	7-6-43	ROSS

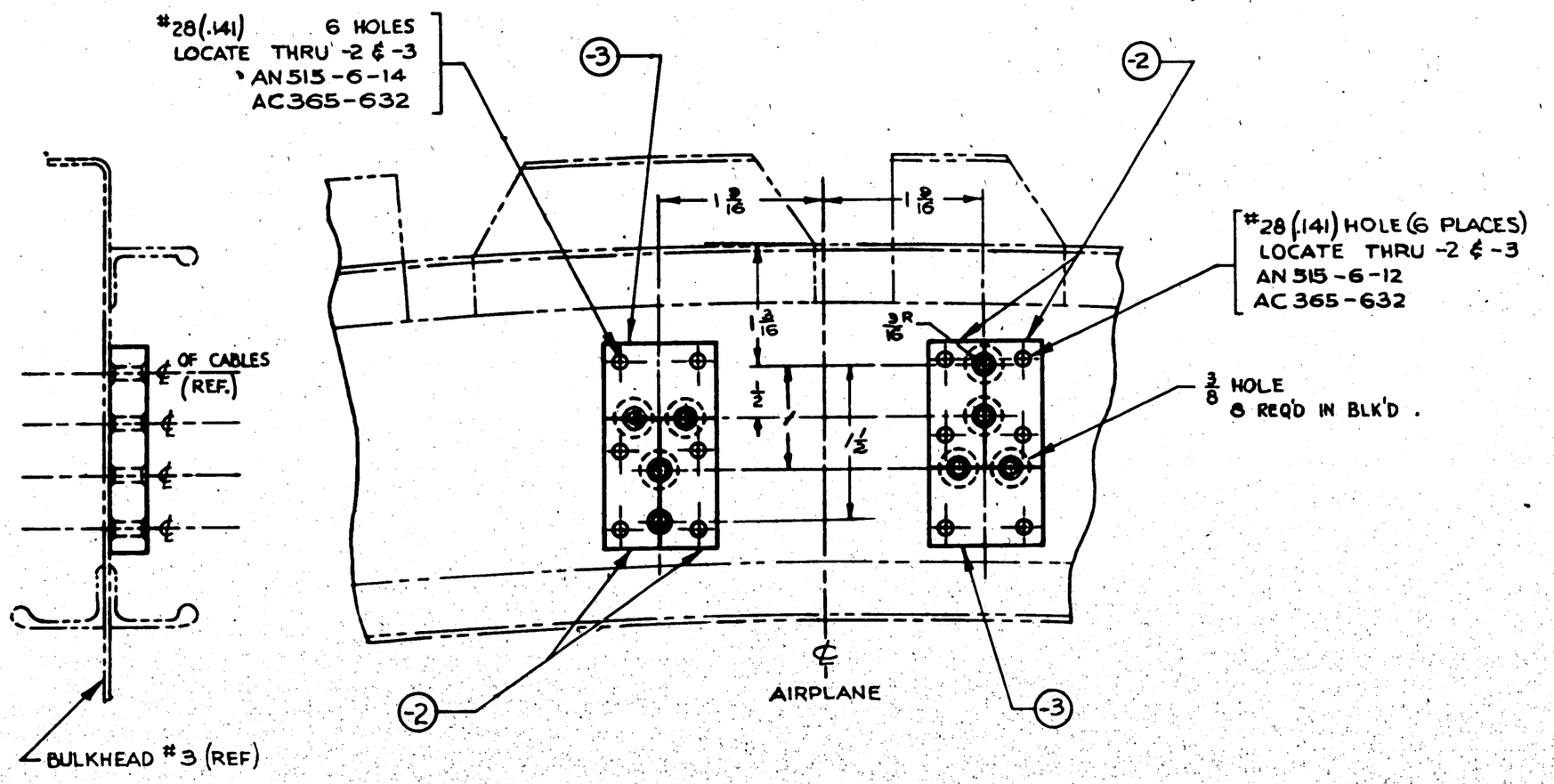

FORWARD

VIEW LOOKING FORWARD

NOTE — SEE SHEET #2 FOR DETAILS

ASSY. DASH NO.	MODEL	NEXT ASSY.	REQ'D
	28-5AMN	28P5005	1
	28-5ME		1
	PBY-5B		1
	28-5AMC		1
	28-5MN		1
	28-5MC		1
	28-5MA		1
	PBY-5A		1
	PDY-5	28P5005	1
	PBY-4	28P5008	
	PBY-3	28P3008	
	PBY-2	28P2008	
	PBY-1	28P1002	
	XPBY-1	28P1008	

REQUIREMENTS PER AIRPLANE

REPLACES 28P1090 1-10-36 .15 GALS. WT.

REPLACED BY AST. WT.

UNLESS OTHERWISE SPECIFIED DIMENSIONS TOLERANCES ± 1/32 SCALE 12"=1'-0"

STAMP PART NUMBER WHERE SHOWN

PART No.	STOCK	MATERIAL	SPEC.	LH REQ. -0	RH REQ. -0	LH REQ. -2	RH REQ. -2	LH REQ. -3	RH REQ. -3	LH REQ. -4	RH REQ. -4	LH REQ. -5	RH REQ. -5
AC365-632											12		
AN515-6-12											6		
AN515-6-14											6		
-3	3/8 x 7/8 x 1 1/4	PHENOLIC	17P5-T.P86					2					
-2	3/8 x 5/8 x 1 3/8	PHENOLIC	17P5-T.P86						4				

PARTS LIST PER ASSY.

		DRAFT	CHECK	STRUCT	MAT	APPROV	ENG.
AC		BOURQUE	THURBER	MILLER		L.C.W.	
NAVY NONE	NONE	1-10-36	5-11-37			4-2-37	
HEAT TREAT	FINISH						

NAME INSTALLATION-ENGINE CONTROLS - CABLE FAIRLEAD (BLK'D #3)

OPP. HAND

DWG. D SIZE 28P1090 SHEET 1 OF 2

CONSOLIDATED VULTEE AIRCRAFT CORP. SAN DIEGO DIVISION . . SAN DIEGO, CALIF.

R 113H6 060282

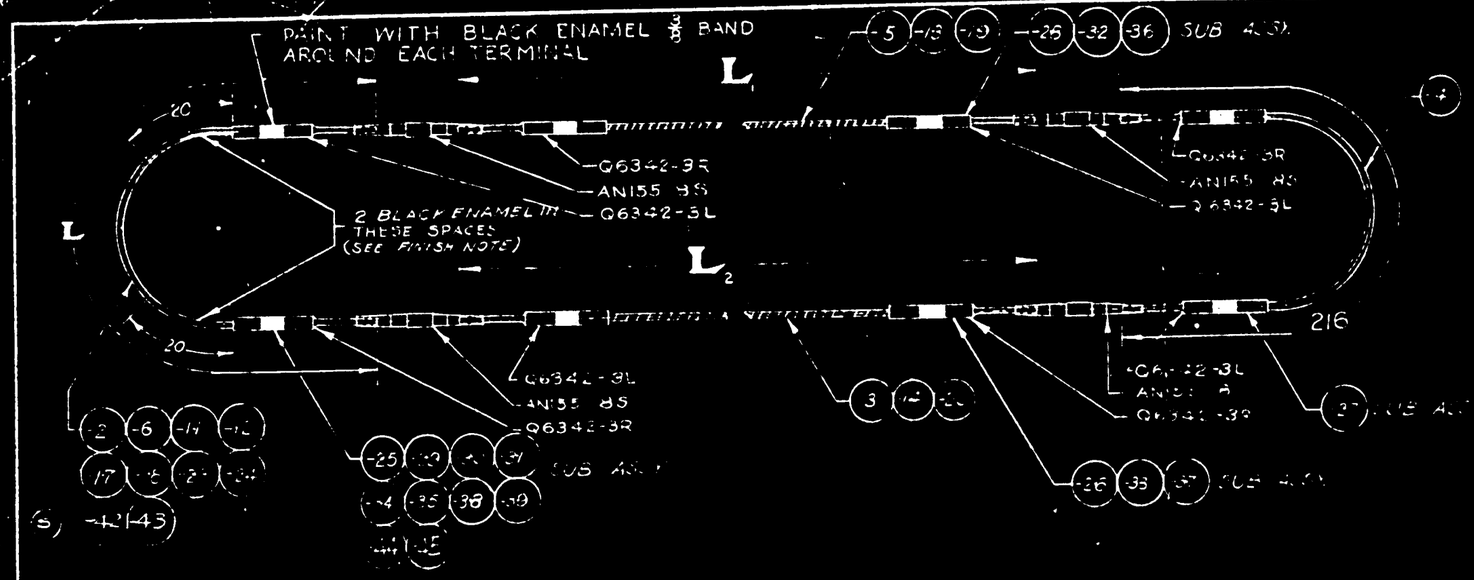

LET	ALTERATION	DATE	BY
A	[illegible]	[illegible]	[illegible]
S	CREATED FOR [illegible]	[illegible]	[illegible]
T	[illegible]	[illegible]	[illegible]

PART No	SPLICE No	L	CABLE No	L1	CABLE No	L2	L	L1	L2
-17	-2		5	-3	183			12	
-1	-6		5	-3	16		12		10
-9	-11		5	-14	2		130	167	
-10	-12		-12	-14	12		10	6	
-15	-17		-10	-20	136		140	164	
-16	-18		-19	-20	122		126	164	
-29	-23		-19	-20	124			164	
-31	-24		-19	-20	126		186	164	
-40	-42		-19	-20	122		186	164	
-41	-43		-19	-20	124		182	164	

NOTES:
1. SWAGE ALL ENDS PER SPEC. T-46.
2. SEE DWG "28P42 FOR SWAGING OPERATIONS ON TERMINALS
3. FINISH ALL CABLE R.R. EXCEPT AS FOLLOWS: THE SECTION OF CABLE TO BE BLACK ENAMELED SHALL BE WRAPPED WITH MASKING TAPE BEFORE DIPPING INTO A RUST PREVENTATIVE SOLUTION. REMOVE MASKING TAPE AND APPLY TWO COATS OF HEAT RESISTING BLACK ENAMEL SPEC. E61.
4. PROOF LOAD 10442 LBS (T)

ASSY DASH NO.	MODEL	NEXT ASSY.	REQ

REQUIREMENTS PER AIRPLANE

REPLACES 28P1137 OF 2-15-37 — CALC. WT. 1.08

REPLACED BY — ACT. WT.

LIMIT OR DIMENSIONS UNLESS OTHERWISE SPECIFIED ± 1/8 — SCALE 6" = 1'-0"

STAMP PART NUMBER WHERE SHOWN

PART No	STOCK	MATERIAL	SPEC.	LH REQ	RH REQ	LH REQ	RH REQ	LH REQ	RH REQ	LH REQ	RH REQ	LH REQ	RH REQ
				4	4	4	4	4	4	4	4	4	4
-25	SUB ASSEMBLY			26	27	28	29	30	31	32	33	34	
-24				4	4	4	4	4	4	4	4	4	
-23				3	3	3	3	3	3	3	3	3	
-22				2	2	2	2	2	2	2	2	2	
-21				1	1	1	1	1	1	1	1	1	
-20													
-19													
-18													
-17													
-16													
-15													
-14													
-13													
-12													
-11													
-10													
-9													
-8													
-7													
-6													
-5													
-4													
-3													
-2													
-1													

PARTS LIST PER ASSY.

AC									
NAVY	NOTED								
HEAT TREAT	FINISH								
DRAFT	CHECK	STRUCT	MAT	APPROV	ENG.				
OPP. HAND									

NAME CABLE ASSEMBLY
ENG. CONTROLS, PROPELLER

CONSOLIDATED AIRCRAFT CORP. San Diego, Calif.

DWG. SIZE D — 28P1137

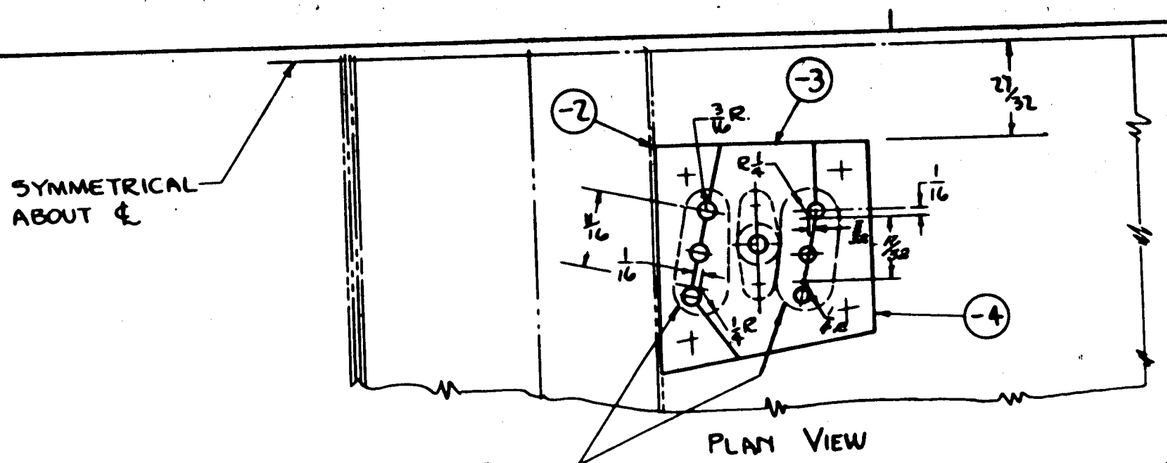

E.O.A-3929 PBY-5
28-5M3
PBY-5A
OA-10

LET	SUPPLI EQUIPMENT CLASSIFICATION ALTERATION	DATE	BY
A	TRACED	9-22-37	V.L.B.
B	MATL. SPEC. FOR -2, -3 & -4 WAS TYPE P.B.G. NOW TYPE P.B.G. & ADDED PBY-4 REQM'TS.	1-19-38	[illegible]
C	ADDED PBY-5 REQM'TS. 10 HOLES WAS 9, 1/16 3/8 ADDED 17/32 WAS 1/16 [redacted] WAS #30(.128) DRILL 4 HOLES	6-19-39	[illegible]
	[redacted] -D-6 RIVET AC990-DU WASHER: ADDED TO B/M ANSTS- D6-9 & AN365-D632	5-12-41	[illegible]

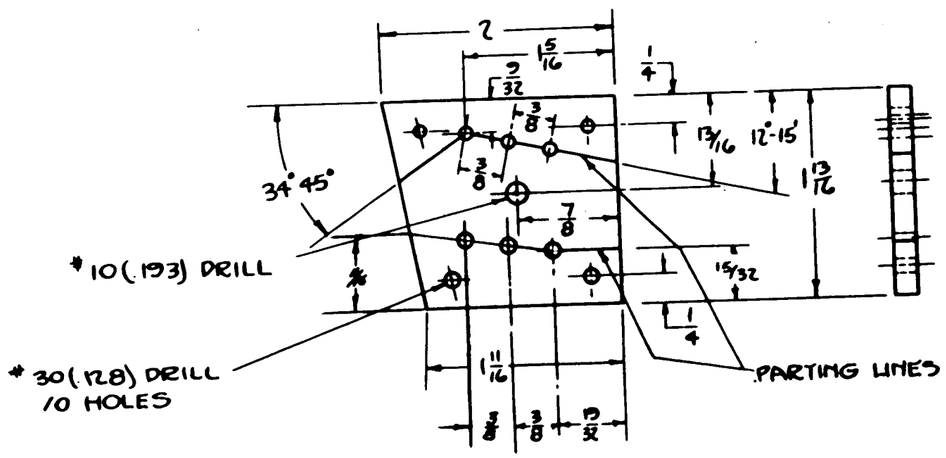

-2 -3 -4 3/16 PHEN. MATERIAL
SPEC. 17PS TYPE PBG
FINISH:- NONE

PBY-5B	28P5005	1							
PBY-5A		1							
28-5AMC									
-28-5ME	28P5005	1							
" MA			AN515-D6-9	9					
" MC			AQ365-D632	9					
" MN			AN960-D10	2					
PBY-5	28P5005	1							
PBY-4	28P3008		AN520-10-10	2					
PBY-3	28P3008		AC425-D3				-4	2	
PBY-2	28P1008		AC366F1032	2			-3	2	
PBY-1	28P1008					28P1266-2	-2	2	
O.H.	MODEL	NEXT ASSY.	REQ.	ST'D PARTS	LH REQ.	RH REQ.	PART NO.	LH REQ.	RH REQ.

REQUIREMENTS PER AIRPLANE

MAT.	SPEC.	HEAT TREAT	FINISH
MOTED	MOTED	—	—

PARTS LIST PER ASSY.

DRAFT	CHECK	EXAM.	ENG.
9-16-38	9-17		

REPLACES
REPLACED BY
LIMIT ON DIMENSIONS UNLESS OTHERWISE SPECIFIED ± 1/32
APPROVED [redacted] DATE 9-22-37
CALC. WT. 105 ACT. WT.
SCALE 12" = 1'-0"
AC
NAVY MOTED
MATERIAL

CONSOLIDATED AIRCRAFT CORP. BUFFALO, N. Y.
STAMP PT. No. WHERE SHOWN

NAME FAIRLEAD INSTALLATION ENG. CONT.- DECK BULKHEAD #4

OPP. HAND

SIZE D DWG. 28P1266

LET	ALTERATION	DATE	BY
V	TRACE NO WT. CHG.	7-22-43	GREGG

NOTE: INSTALL BRACKET ON ASSEMBLY AS SHOWN, R.H. OPP. AS SHOWN IN VIEW LOOKING AFT

DETAIL OF -4 & -5

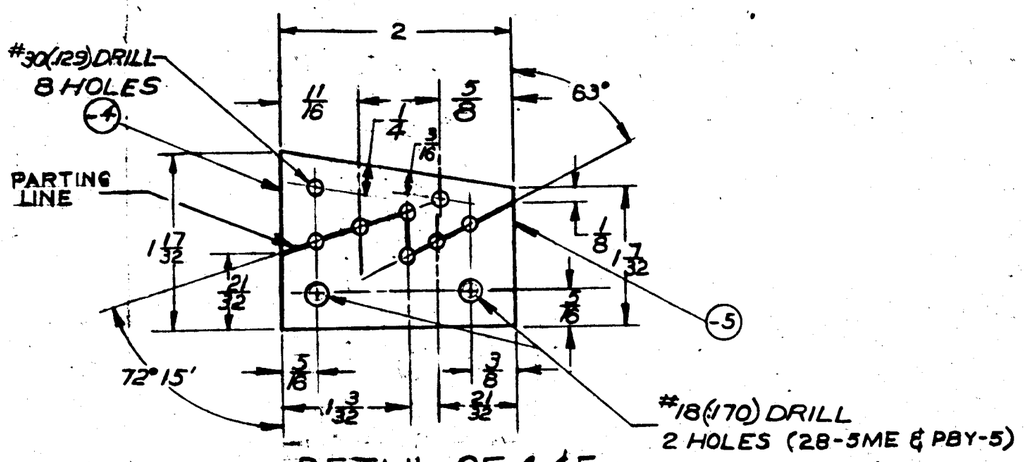

DETAIL OF 4 & 5

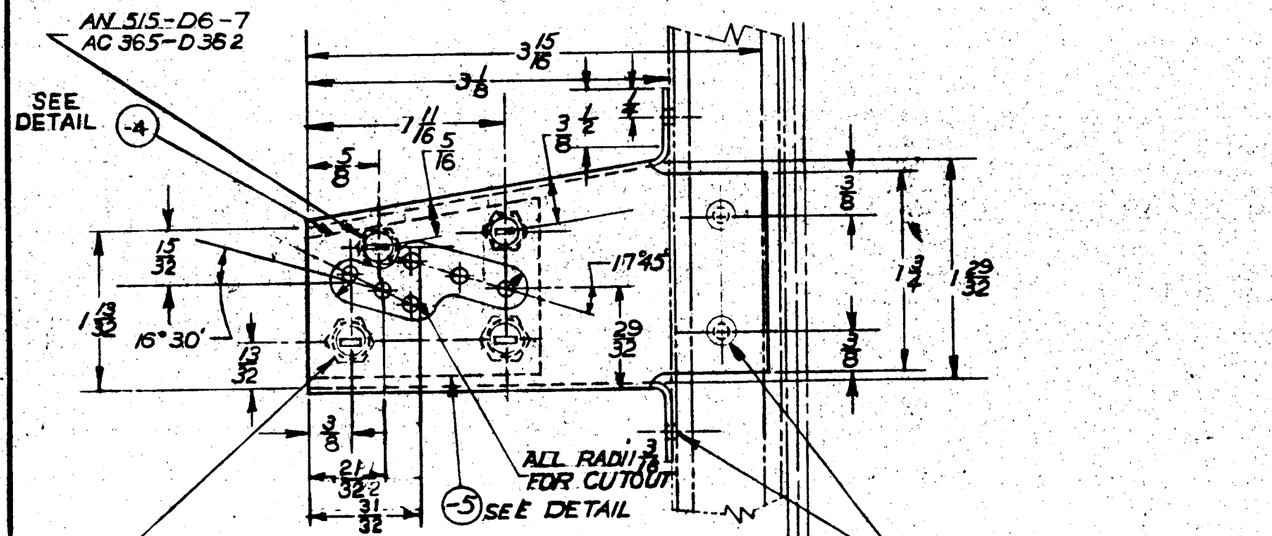

L/R	ALL 28-5	28P5005	1 EA		
L/R	PBY-5B	28P5005	1 EA		
L/R	PBY-5A	28P5005	1 EA		
L/R	PBY-5	28P5005	1 EA	AN515-D6-7	2 2
-L/R	PBY-4	28P5008		AN515-D8-7	4 4
-L/R	PBY-3	28P5008		AN515-D8	2 2
-L/R	PBY-2	28P1006		AC365-D832	2 2
-L/R	PBY-1	28P1008		AC 365-832	2 2
				AC 365-D832	4 4
ASSY. SALES NO.	MODEL	NEXT ASSY.	REQ.	28P1268-5	0.078 X 1.5 X 1 1/4 X 2 1/8 PHEN LAM TYPE PBG 1 1
	REQUIREMENTS PER AIRPLANE			-4	0.078 X 1.5 X 1 1/8 PHEN LAM TYPE PBG 1 1
REPLACED	28P1268 OF 2-21-43	.11 CALC. WT.		-3	0.040 CVA X 4 1/8 AN (A) QQ-A-355-T 1 1
REPLACED BY		ACT. WT.		28P1268-2	0.078 X 1.5 X 4 1/8 AL. AL. QQ-A-355-T 1 1
UNLESS OTHERWISE SPECIFIED DIMENSIONS ARE TOLERANCES	SCALE 12" = 1'0"				
±1/32				PART No.	STOCK / MATERIAL / SPEC.
STAMP PART NUMBER WHERE SHOWN				PARTS LIST PER ASSY.	

LH RH LH RH LH RH LH RH LH RH
REQ. REQ. REQ. REQ. REQ.
-0

AC	ZP-2GP	DRAWN	BRAIN 3-3-43			8-20-43	
NAVY		CHECK	GREGG 7-22-43			L.C.W.	
HEAT TREAT	FINISH	DRAFT	CHECK	STRUCT	MAT	APPROV	ENG.

NAME INSTALLATION-FAIRLEAD-BULK'D #4 SUPERSTRUCTURE

OPP. HAND 28P1268-R

CONSOLIDATED VULTEE AIRCRAFT CORP. SAN DIEGO DIVISION . . SAN DIEGO, CALIF.

SIZE D. 28P1268

8971d82

SUPPLIES & EQUIPMENT CLASSIFICATION			
LET	ALTERATION	DATE	BY
C	TRACED	8-15-38	[illegible]
D	ADDED "DRILL 5/16 DIA. (1 HOLE)	1-8-41	[illegible]
E	ADDED DETAILS FOR -5 & -6 AS FOLLOWS: 45° 1/8 DIM., 1 1/8 DIM., DRILL .3185 +.005 -.000 WAS 5/16, ADDED NOTE WITH -5, ADDED -6 NO. 4 NOTES: PIN .313 +.001 -.000, ADDED -2 TO DWG. & P/N	10-23-41	[illegible]
F	CHAMFER 30° X 1/32 DIM. WAS 45° X 1/8 DIM.	12-30-41	[illegible]
G	ADDED ASTERISK (*) TO 28P2020 -6 IN B/M. NO WT. CHG.	3-25-42	[illegible]

PBY-5

(E) -5 MADE FROM SHAFT OF GOV'T. FURNISHED CRANK

CHAMFER 30° X 1/32

5 1/2

1 3/8

1/4

2 (REF.)

1/4

5/8 (REF.)

1 1/4

-6

PIN .313 +.001 -.000

(E) BREAK EDGES

(D) (E) DRILL .3125 +.000 -.001 (PRESS FIT FOR -6, REF.)

(F)

7/16

-7

-3 HAND CRANK ASSEMBLY ECLIPSE AVIATION CORP. GOVERNMENT FURNISHED

8" (REF.)

28 P 109 BUSHING

AN425-D4 RIVET FLUSH HEADS ON BOTH SIDES

THESE PARTS ARE FURNISHED AND INSTALLED BY CONTRACTOR ON -2 CRANK ASS'Y ONLY.

28 P 102T CABLE ASS'Y

1 (REF.)

2 (REF.)

11 1/16 (REF.)

5/16 (REF.)

17 5/32

5/8 (REF.)

11/32 (REF.)

3 1/2 (REF.)

15 9/16

-4 EXTENSION SHAFT R.H. JAW AS SHOWN ECLIPSE AVIATION CORP. - GOVERNMENT FURNISHED.

DASH NO.	CALC. WT.
-2	3.64
-3	3.50
-4	1.20

CRANK ASS'Y 28P2020-2 AS SHOWN FOR STARTER.
CRANK ASS'Y 28P2020-3 AS NOTED FOR FLOAT.

PARTS MARKED * ARE GOVERNMENT FURNISHED.

	O.H.	MODEL	NEXT ASSY.	REQ.	ST'D PARTS	LH REQ.	RH REQ.	PART NO.	LH REQ.	RH REQ.	LH REQ.	RH REQ.	LH REQ.	RH REQ.	LH REQ.	RH REQ.
-3		20-SMB,MM	28P5109	1 EA.												
-3		20-SME,MM	28P5109	1 EA.												
-3		20-SMB,MC	28P5109	1 EA.												
-3		PBY-5	28P5109	1												
(E) -3		20-SMC	28P5026	1												
-3		20-SMC	28AD426	1												
-3		20-SMW	28AD426	1												
-3		20-SMA	28P5026	1												
-3		20-SMN	28AD426	1				28P2020-7	1							
-3		20-SME	28AD426	1				* 28P2020-6	1							
-3		20-SMB	28AD426	1				* 28P2020-5	1							
* -3		PBY-5A	28P5026	1				PARTS ASSEM ON 28P2020-3 SUB ASS'Y								
-3		PBY-5B	28P5026	1												
(E) -3		PBY-5A	28AT109	1 EA.				AN425-D4	1							
-3		PBY-2	28P3001	1				28P1027	1							
-3		PBY-3	28P3001	1				28P109	1							
-2		PBY-2	28P2001	1				# 28P2020-4	1							
-3		PBY-5	28P5026	1				* 28P2020-3	1							
-2		PBY-2	28P2001	1												

REQUIREMENTS PER AIRPLANE	MAT.	PARTS LIST PER ASSY.	-2	-				
A C					FINISH	O.K.P.	N.A.M.	R.
NAVY —	—	NONE	—					
MATERIAL	SPEC.	HEAT TREAT	FINISH		DRAFT	CHECK	EXAM.	ENG

REPLACES

APPROVED [signature] DATE 11-30-36 (E)

REPLACED BY

MATED

CALC. WT. ACT. WT.

± 1/64 LIMIT ON DIMENSIONS UNLESS ± OTHERWISE SPECIFIED

6" = 1'-0" SCALE

CONSOLIDATED AIRCRAFT CORP. SAN DIEGO, CALIF. STAMP PT. NO. WHERE SHOWN

NAME CRANK & EXTENSION STARTER

OPP. HAND

SIZE D

28P2020

LET	ALTERATION	DATE	BY
K	ON FACE FOR -5, REMOVED" SEC. K5401 (2½ x 2½ x 1/16)" & FOR -6, REMOVED" MAKE FROM ANGLE SEC. K5401." ADDED TYPICAL CROSS-SECTION FOR -5 & -6 & MAT'L. NOTE #1 & 2 WT. CHG. NEG	8-2-43	RUHF
L	REMOVED DIMS. 3/16 & 1/4. NO WT. CHG.	10-6-43	MAIN

LET	ALTERATION	DATE	BY
B	TRACED	2-10-38	
C	AC365D428 WAS AC365-428	3-27-39	
	AN315D4R WAS AN315-4R		
	AN960D416 WAS AN960-416		
D	-20 TAB & -21 PAD ADDED	11-1-40	
	TO DWG.		
E	DIM. 7 5/8 WAS 7 1/4. BROUGHT REQ'D PLANE UP TO DATE.	9-3-41	
F	ADDED NOTE: "#30(.128) DRILL 4 HOLES TO MATCH 28-0-1014-7. REPLACED 28-0-1014 WITH 28-0-1014-7 NO WT. CHG.	3-25-42	
G	REMOVED DIMS. 13/16, 3/16 (2 PLACES) & 5/32. NO WT. CHG.	6-29-42	
H	REVERSED 28-0-1013-7 NO WT. CHG.	10-13-43	
J	NOTE 1/4 — GRADE B WAS 1/4		
	SPONGE RUBBER PAD WT. CHG. NEG.	4-12-44	

FINISH CODE	
Z	ANODIC TREATMENT
P	P-27 PRIMER
AP	ALUMINIZED PRIMER
C	CADMIUM PLATE

GP-GREEN PRIME

DRILL 1/8 7 HOLES

1/8 BEND RAD. ALL PLACES

-6 (REF)

-12 (REF)

-4 (REF)

10 1/4

4 15/16

2

6 EQUAL SPACES

5/16

1/8

1 1/8

BEND LINE

5 1/4

5 5/16

RIVET SPACING (APPROX)

1 11/32

8 5/4 DIA.

-11 (REF)

AN5D12 BOLT
AN310D5 NUT
AN380-2-2 COTTER

(K) TYPICAL CROSS-SECTION FOR -5 & -6.

(TRUE DIM'S)

-9 -22 STRAP ASSY WITH BUMPER ATTACHED

-9 .051 AL. AL. SHEET

-10 DUPRENE 1/16 × 3/4 × 15 CEMENT TO -9

-11 .032 AL. AL. SHEET 2 1/16 LONG 28-0-1014-7

(L) CEMENT -21 TO -22 WITH MINN. MINING CEMENT OR EQUIV.

AN425-D4 RIVETS (4) FLUSH ON INNER SIDE OF STRAP

(20) .040 24ST ALUM. ALLOY SPEC. 47AB (T) (1)

(21) (J) 1/4 RECLAIMED SPONGE RUBBER PAD SPEC. 21578 GRADE B

7 5/8 (E) (ON CURVE)

(D)

(H)

(G)

CRADLE ASSY (-2)

(-8) DUPRENE 1/16 × 3/16 × 12 7/8 (CEMENT TO -4)

(-4) AL. AL. .051 SHEET

(-5) ANGLE

(-6) CLIP

(-7) CLIP, MAKE FROM ANGLE SEC. 1286

AN442 D4 RIVET

AN426 D4 RIVET

(-12) FILLER .064 AL. AL. SHEET

AC365D428 NUT
AN315D4R NUT (C)
AN960D416 WASHER
-7 (REF)
#30 (.128) DRILL 4 HOLES TO MATCH 28-0-1014-7
AN442-D3 (F)

MATERIAL NOTES-
1-MAT'L. FOR -5 MAY BE-
(K) (A) .072 X 1 3/8 X 13 1/2, 24ST ALC, SPEC. QQ-A-362-T, OR
(B) K5401 X 13 1/2, AL AL EXTR., SPEC. QQ-A-354-T.
2-MAT'L. FOR -6 MAY BE-
(A) .072 X 1 5/8 X 1 5/8, 24ST ALC, SPEC. QQ-A-362-T, OR
(B) K5401 X 1 5/8, AL AL EXTR., SPEC. QQ-A-354-T.

FINISH: Z-P-2GP EXCEPT PARTS -8 & -10

* NOTE: THIS ASS'Y. USED ON PBY-2 SHIPS #0490 - #0496 INCL ONLY

** NOTE: REQ. ON FOLLOWING MODELS PBY-5A, [illegible], 28-5MA 28-5MC, 28-5ME, 28-5MN, 28-5AMC, 28-5AMN & PBY-5B

GP-GREEN PRIME
FINISH C[illegible]

ALL AL. ALLOY SHEET SPEC. 47A10 (CONDITION T) ALLOY 24S EXCEPT AS NOTED
ALL AL. ALLOY EXTRUSIONS SPEC. 46A8 (CONDITION T) ALLOY 24S EXCEPT AS NOTED
HEAT TREAT ALL CONDITION A MATERIAL PER SPEC. 3R65
RIVETS AL. ALLOY EXCEPT AS NOTED.

PARTS ASSEMBLY ON -22																													
-21																													
-20																													
28-0-1014-7																													
28P2083-11																													
28P2083-10																													
28P2083-9																													
PARTS ASSEMBLY ON -22																													
28-0-1014-7																													
28P2083-11																													
-10																													
28P2083-10																													
-8																													
-7																													
-6																													
-5																													
-22																													
-9																													
-11																													
-12																													
-8																													
-7																													
-6																													
-5																													
-3	PBY-5	28P5063	1	AN310-D5	1																								
-0*	PBY-2	28P2083	1	AN5D12	1																								

O.H.	MODEL	NEXT ASSY.	REQ.	ST'D PARTS	LH REQ.	RH REQ.	PART NO.	LH REQ.	RH REQ.	LH REQ.	RH REQ.	LH REQ.	RH REQ.	LH REQ.	RH REQ.	LH REQ.	RH REQ.
REQUIREMENTS PER AIRPLANE				MAT.	PARTS LIST PER ASSY.			-0.									

A/C				
NAVY NOTED	NOTED	NONE	NOTED	
MATERIAL	SPEC.	HEAT TREAT	FINISH	

DRAFT	CHECK	EXAM.	ENG.
5-10-37	5-17-37		

REPLACES — REPLACED BY — APPROVED RCW 2-6-38 DATE — CALC. WT. .55 — ACT. WT. — SCALE 12" = 1'0"

CONSOLIDATED AIRCRAFT CORP. SAN DIEGO, CALIF.

NAME BRACKET ASSY.- SLINGER RING TANK-REAR

OPP. HAND

DWG. D SIZE 28P2083

SUPPLIES & EQUIPMENT CLASSIFICATION			
LET	ALTERATION	DATE	BY
A	TRACED	3-29-38	Sorensen
B	ADDED PBY-1 & PBY-2 REQUIRTS	7-7-38	Doc Wilson

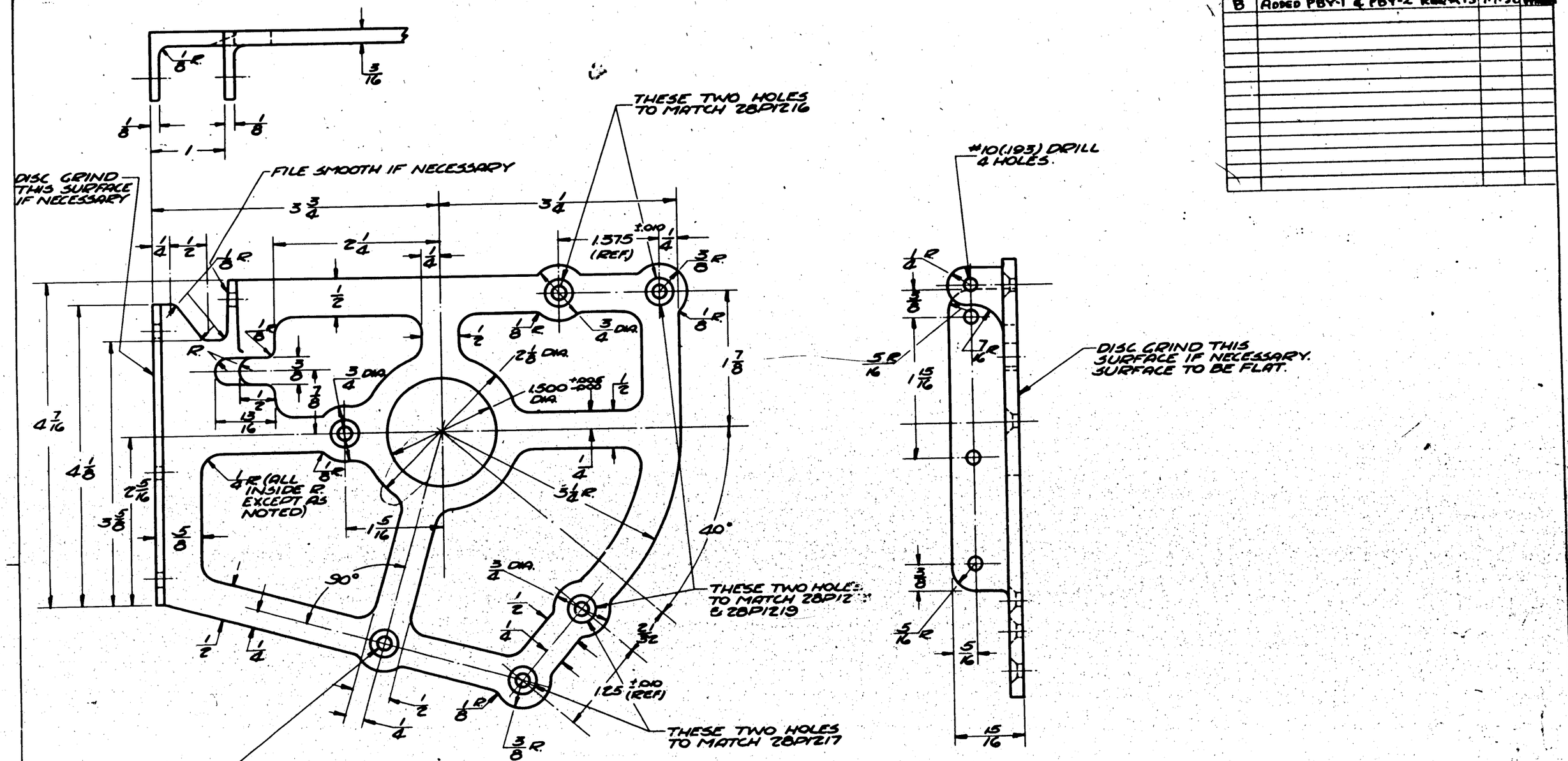

FINISH:
ANODIZE
P27 PRIMER
2 COATS BLACK ENAM.

(B)

	PBY-5A	28P5002	1																
	PBY-5B	28P5002	1																
	PBY-4	28P1179																	
	PBY-3	28P1179																	
	PBY-2	28P1179	1																
	PBY-1	28P1179	1																

REPLACES 28P1230	APPROVED [redacted] 3-29-38 DATE	O.H.	MODEL	NEXT ASSY.	REQ.	ST'D PARTS	LH REQ.	RH REQ.	PART NO.	LH REQ.	RH REQ.
REPLACED BY	CALC. WT. 33 ACT. WT.	REQUIREMENTS PER AIRPLANE				MAT.	PARTS LIST PER ASSY.				
LIMIT ON DIMENSIONS UNLESS OTHERWISE SPECIFIED ± 1/32 & 1/2°	SCALE 12" - 1'0"										
[redacted]	AC										
	NAVY 24S ALCLAD (1188-T4)	ALAN CLAD	NAF 3A8	2-D-2088			DRAFT	CHECK	EXAM.	ENG.	
	MATERIAL	SPEC.	HEAT TREAT	FINISH							
CONSOLIDATED AIRCRAFT CORP. BUFFALO, N. Y.	STAMP PT. No. WHERE SHOWN	NAME PLATE-ENG. CONTR-MIXTURE CONTR-UNIT SIDE-L.H.					OPP. HAND				
							SIZE D	28P3005			

SUPPLIES & EQUIPMENT CLASSIFICATION			
LET	ALTERATION	DATE	BY
B	TRACED UP TO DATE	9-21-36	WHEELER
C	ADDED PBY-1 & PBY-2 REQMTS	7-7-36	CODY WRIGHT
D	CHGD. NOTE CALLOUT 28P2016 TO 28P1216. NO WT. CHG.	8-20-37	AHRENS

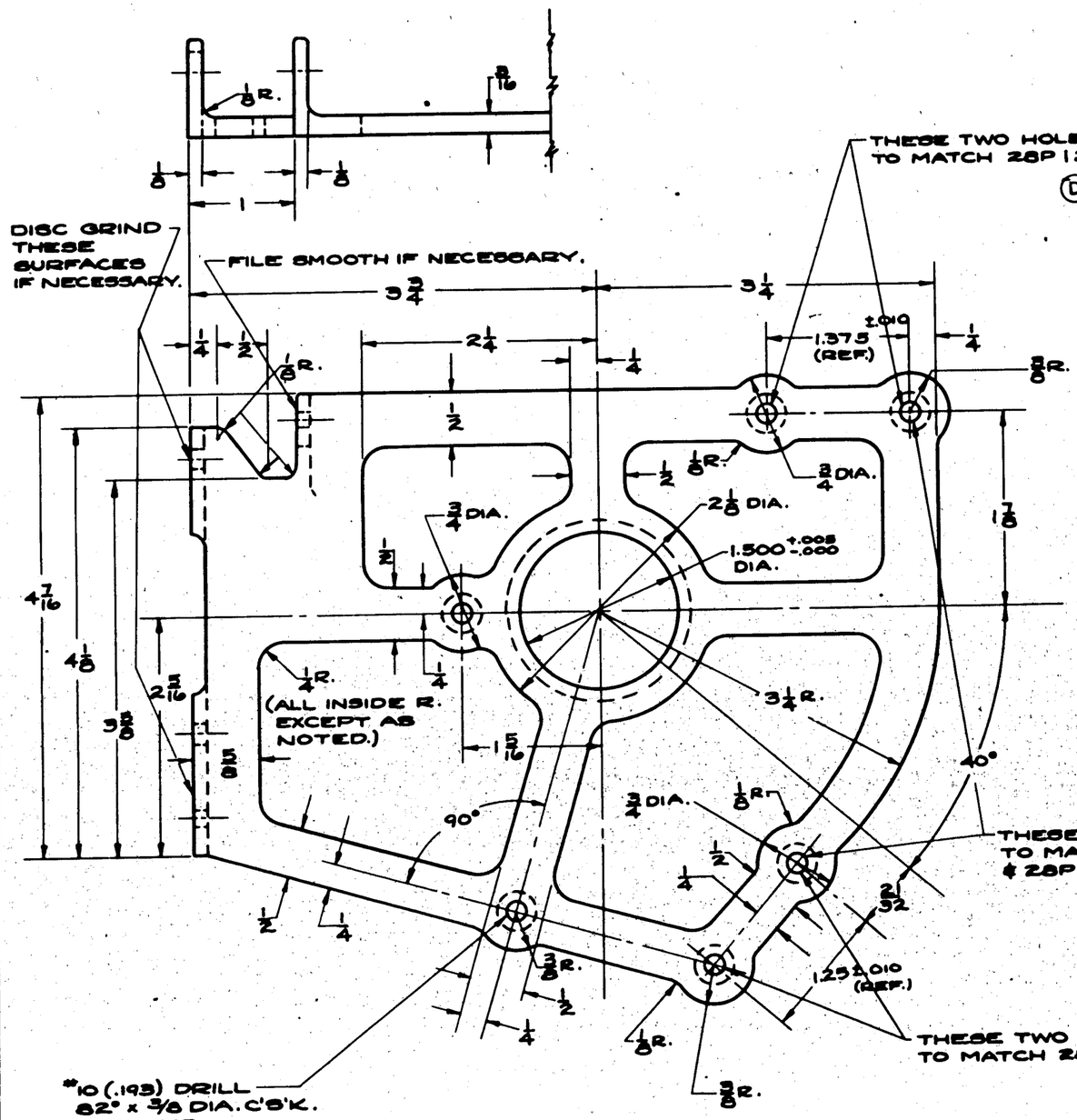

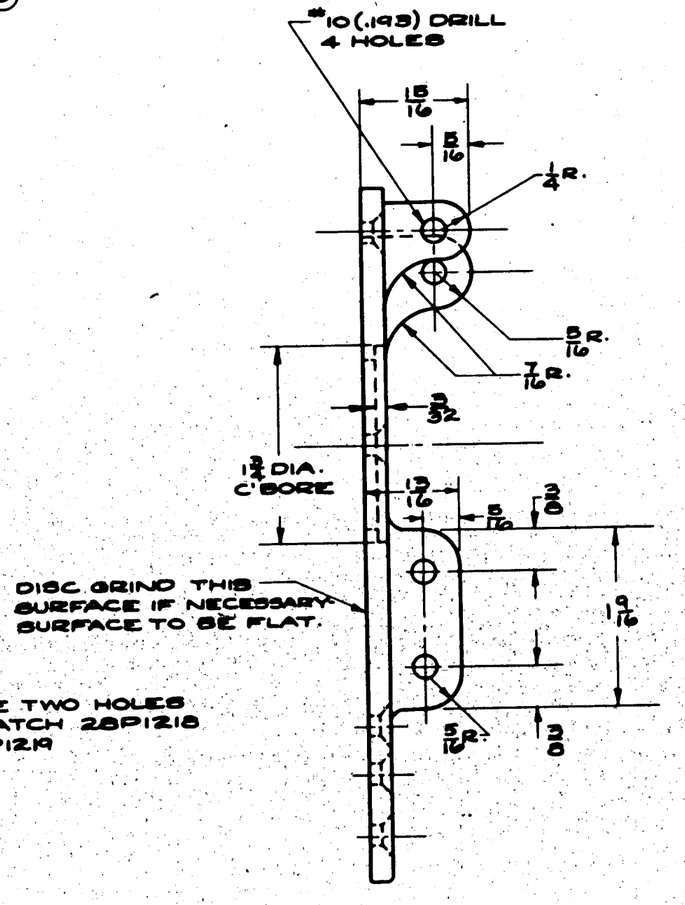

FINISH:
ANODIZE
P27 PRIMER
2 DULL BLACK ENAMEL

	28-5'S	28P5002	1 EA.									
	PBY-5	28P5002	1									
	PBY-5A	28P5002	1									
	PBY-5B	28P5002	1									
	PBY-4	28P1179										
	PBY-3	28P1179										
	PBY-2	28P1179	1									
	PBY-1	28P1179	1									
O.H.	MODEL	NEXT ASSY.	REQ.	ST'D PARTS	LH REQ.	RH REQ.	PART NO.	LH REQ.	RH REQ.			

REPLACES 28P1230-1	[redacted]	APPROVED [illegible] (PBY)	DATE 9-21-36	REQUIREMENTS PER AIRPLANE			MAT.	PARTS LIST PER ASSY.	
REPLACED BY		.37 CALC.WT.	ACT.WT.					ALTS- HILBERG	MAC- DONALD	O.W.N.
LIMIT ON DIMENSIONS UNLESS OTHERWISE SPECIFIED ± 1/32 .4 .8		SCALE 12"=1'0"						7-7-37	7-8-37	MOFFATT R
		AC						DRAFT	CHECK	EXAM.	ENG.
		NAVY	MATERIAL AL. ALLOY CAST (195 T4)	SPEC. 46A1 CL4	HEAT TREAT N.A.F. 8A-8a	FINISH Z-P-2DBE					

CONSOLIDATED AIRCRAFT CORP. BUFFALO, N. Y.

STAMP PT. No. WHERE SHOWN

NAME PLATE-ENG. CONTROLS-MIXTURE CONTROL UNIT SIDE-R.H.

OPP. HAND

DWG. SIZE D 28P3006

SULLIVAN-DICKERMAN CO., INC. BUFFALO
IMPERIAL TRACING CLOTH

E.O. 22601
PBY 5

SUPPLIES & EQUIPMENT CLASSIFICATION			
LET	ALTERATION	DATE	BY
B	TRACED	5-30-38	[redacted]
C	RADII WAS 1/4 IS 1/4 ± 1/16	10-31-40	[redacted]
D	CHANGED DIM. 5/16 TO 5/32 & 2 1/8 TO 2 1/32 & ADDED FIN. MARK REPLACING "DISK GRIND" NOTE.	3-31-41	Dixon

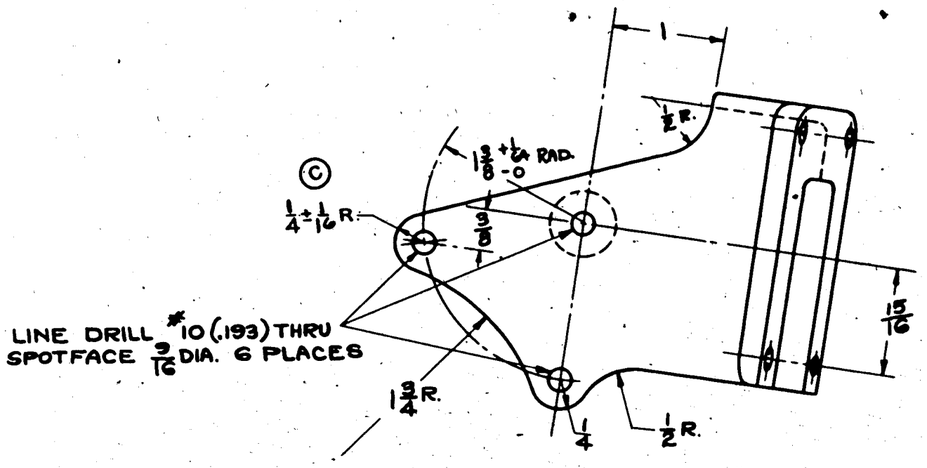

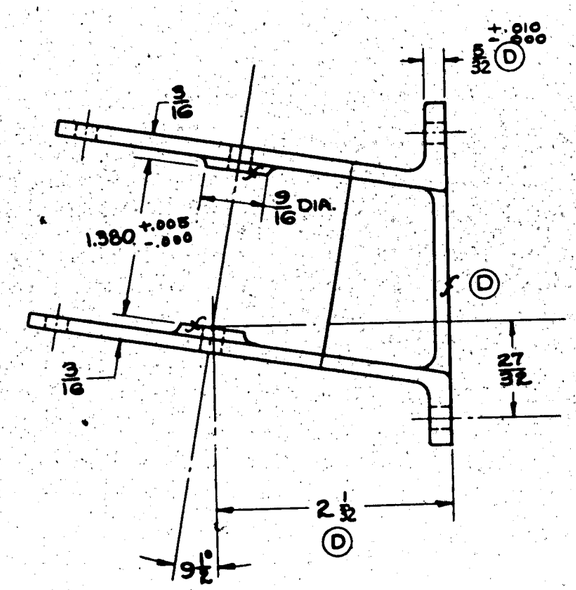

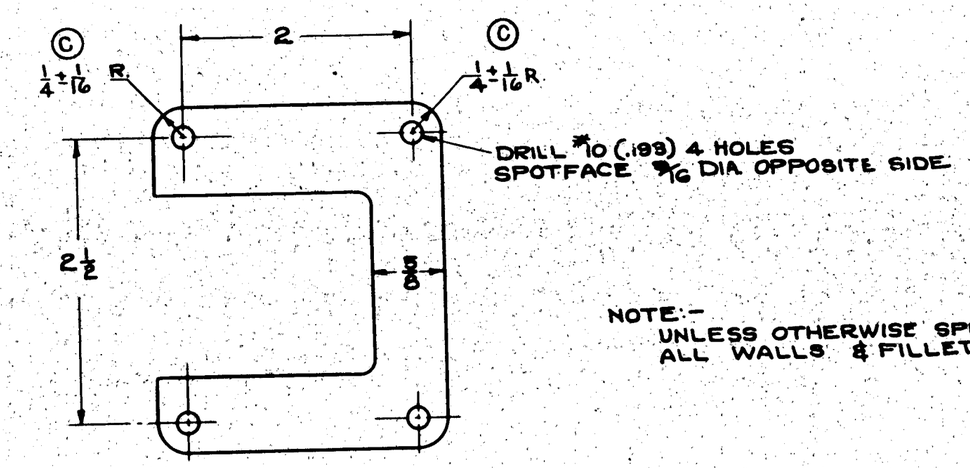

NOTE:-
UNLESS OTHERWISE SPECIFIED
ALL WALLS & FILLETS 1/8

SP. GREEN PRIME
FINISH [redacted]

-R	PBY-5A/C	28P3030	1EA												
-L	PBY-5A/B	28P3030	1EA												
-1	PBY-5	28P3030													
	PBY-5	28P3030													
-1	PBY-4	28P3030													
	PBY-4	28P3030													
-1	PBY-3	28P3080													
	PBY-3	28P3030													

LIMITS ON DIMENSIONS:-
CASTING ± 1/32
MACHINING ± .010

REPLACES	APPROVED [redacted] 3-30-38 DATE	O.H.	MODEL	NEXT ASSY.	REQ.	ST'D PARTS	LH REQ.	RH REQ.	PART NO.	LH REQ.	RH REQ.				
REP'L ACED B	20 CALC. WT. / ACT. WT.	REQUIREMENTS PER AIRPLANE				MAT.	PARTS LIST PER ASSY.								
LIMIT ON DIMENSIONS UNLESS OTHERWISE SPECIFIED ± NOTED	SCALE 12" = 1'-0"											DRAWN	HENRY	R.W.M.	
[redacted]	AC											2-17-37	3-4-37	H.W.H.	R.
	NAVY AL. ALLOY CAST'G.	4GA1 CL. 4	NAF SA-8			Z-P-28 GP						DRAFT	CHECK	EXAM.	ENG.
	MATERIAL	SPEC.	HEAT TREAT			FINISH						OPP. HAND 28P3021-1			
	CONSOLIDATED AIRCRAFT CORP. BUFFALO, N.Y.	NAME BRACKET-ENGINE CONTROL NACELLE MIXTURE PULLEY										SIZE D	28P3021		
	STAMP PT. No. WHERE SHOWN														

SUPPLIES & EQUIPMENT CLASSIFICATION			
LET	ALTERATION	DATE	BY
B	TRACED	3-21-38	[redacted]
C	ADDED ± 1/16 TO 1/4 RADII AT ALL #10(.193) HOLES	10-31-40	WARNER
D	ADDED 3/32 MIN. DIM.	12-4-40	MCSHERRY

E.O. 22601

E.O. 34885

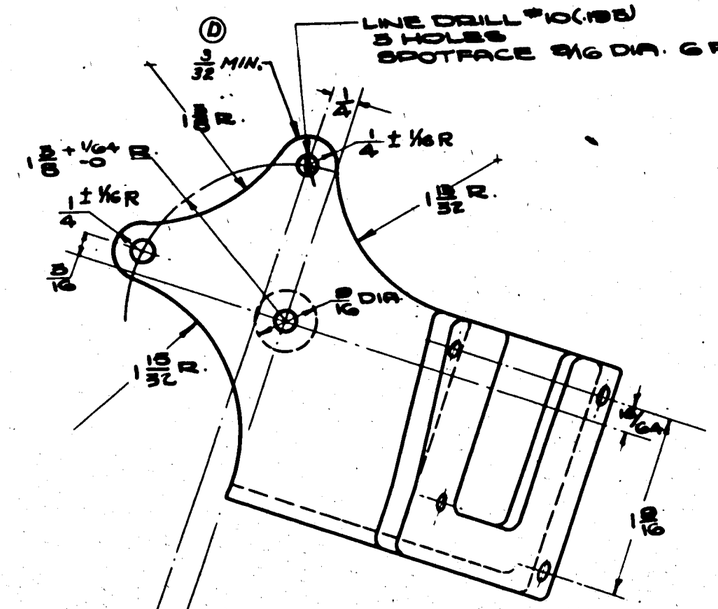

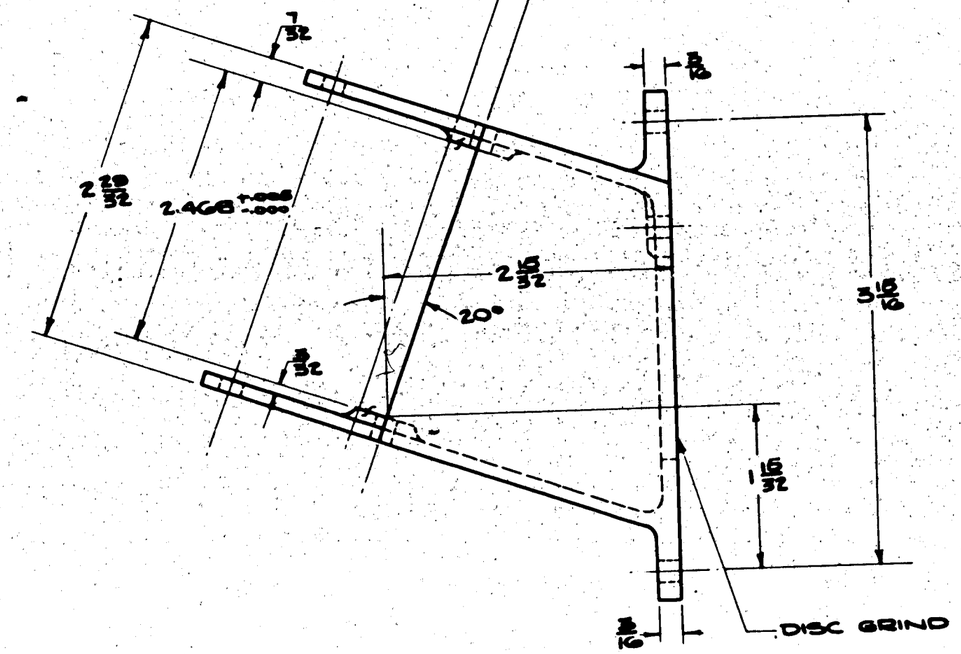

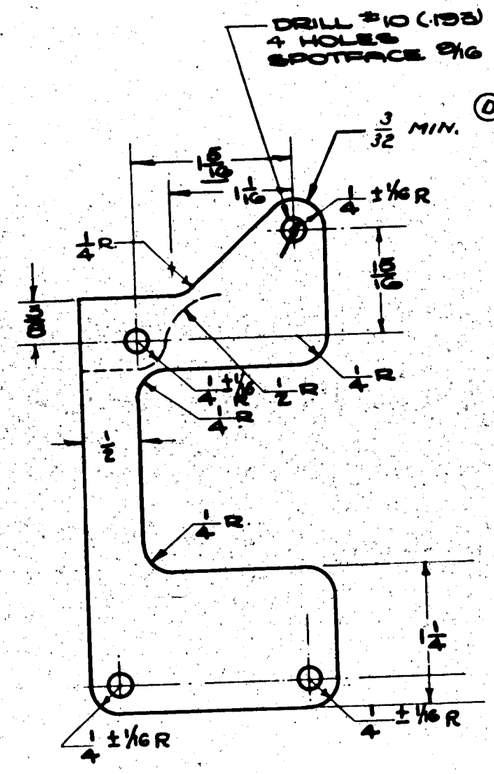

GP-GREEN PRIME

FINISH COL

Z	[redacted]
P	[redacted]
AP	[redacted]
C	[redacted]

NOTE -

UNLESS OTHERWISE SPECIFIED ALL FILLETS ARE 1/8

WALL THICKNESSES & WEBS ARE 1/8

REMOVE ALL FIND & SPRUES

LIMITS ON CASTING ± 1/32

LIMITS ON MACHINING ±.010

												LH REQ.	RH REQ.
-R	PBY-5A	28P5044	1										
-L	PBY-5A	28P5044	1										
-R	PBY-5B	28P5044	1										
-L	PBY-5B	28P5044	1										
-L	PBY-5	28P5044											
	PBY-5	28P5044											
-1	PBY-4	28P3033-1											
	PBY-4	28P3033											
-1	PBY-5	28P3033-1											
	PBY-5	28P3033											

REPLACES		APPROVED [redacted]	5-31-38 DATE	O.H.	MODEL	NEXT ASSY.	REQ.	ST'D PARTS	PART NO.
REPLACED BY		CALC.WT. .28	ACT.WT.	REQUIREMENTS PER AIRPLANE				MAT.	PARTS LIST PER ASSY.
LIMIT ON DIMENSIONS UNLESS OTHERWISE SPECIFIED ± NOTED		SCALE 12" = 10"							
[redacted]		AC		1					
		NAVY AL. ALLOY CASTING		46A1 CL 4	NAF 3A-8A		Z-P-2B-GP		CASTING ENGR. O.K.M. 2-27-37 3-11-37 WHEELER
		MATERIAL		SPEC.	HEAT TREAT		FINISH		DRAFT CHECK EXAM. ENG.
		CONSOLIDATED AIRCRAFT CORP. BUFFALO, N. Y.		NAME BRACKET- ENGINE CONTROLS-NACELLE FIREWALL PULLEY					OPP. HAND 28P3027-1
		STAMP PT. No. WHERE SHOWN							SIZE D 28P3027

SUPPLIES & EQUIPMENT CLASSIFICATION			
LET	ALTERATION	DATE	BY
F	TRACED	4-1-43	[redacted]
G	3/32 WAS 5/32	12/26/43	TAL VC
H	ON DWG. FACE 7/16 WAS 9/32 R.	8-3-44	WHITE
	1 RIVET OMMITTED		
J	5/8, 1 3/16 & 1/4 R WERE 7/16, 1 1/4 & 3/16 R RESPECT. (NEG. W.T. CHG.)	1-1-45	[illegible]

BEND TO FIT EXT. ZEE SECTION AS SHOWN

AN442-D4 RIVET SPACED AS SHOWN

FLUSH HEAD 2 RIVETS

FORWARD

MIC29-2 (4 PLACES) USE UNDER STEEL ANCHOR NUTS

CUTOUT FOR CONTROL CABLES

AN442-D4 RIVET SPACE AS SHOWN

RR A 91894

LH -4 .040 AL. ALLOY SHEET 24ST SPEC. 47AQ COND. T
RH OPP -5 FINISH: 2-P

DRILL #10(.193) 4 HOLES TO MATCH HOLES IN 28P30121 AC366-F1032 ANCHOR NUT DRILL & C'B'K FOR AN425D3 RIVET

LH -2 .064 AL. ALLOY SHEET 24ST SPEC. 47AQ CONDT
RH OPP -3 FINISH: 2-P

℄ LEADING EDGE STR. #45

WING CHORD LINE

-1-R	PBY-5B	28W3017	2EA							
	285 AMC	28W3017	2					MIC29-2	4	4
	285 ME, MF	28W3017	2							
	285 MA, MC	28W3017	2							
-L-R	PBY5, 5A	28W3017	2EA							
-1	PBY-4	28W3017						-6		1
	PBY-4	28W3017						-4	1	
-1	PBY-5	28W3017		AN442D4				-5		1
	PBY-5	28W3017		AN425D3				-2	1	
				AC366 Fnut	4	4				
					LH REQ.	RH REQ.	PART NO.		LH REQ.	RH REQ.

REPLACES	APPROVED [redacted] 4-1-38 DATE	O.H.	MODEL	NEXT ASSY.	REQ.	ST'D PARTS	MAT.
REPLACED BY	CALC. WT. .25 ACT. WT.						
LIMIT ON DIMENSIONS UNLESS OTHERWISE SPECIFIED ± 1/64	SCALE 12" = 1'0"	REQUIREMENTS PER AIRPLANE					PARTS LIST PER ASSY.
[redacted]	AC						
	NAVY NOTED	NOTES	—			NOTED	
	MATERIAL	SPEC.	HEAT TREAT			FINISH	

	DRAWN	Kinney	9-1-37	
	TRACED		9-4-37	
	DRAFT	CHECK	EXAM.	ENG.

CONSOLIDATED AIRCRAFT CORP. BUFFALO, N. Y.

STAMP PT. No. WHERE SHOWN

NAME REINF. INST. - ENGINE CONTROLS - INBD WING RIB PULLEY BRACKET

OPP. HAND 28P30291

SIZE D DWG. 28P3029

SULLIVAN-GRIGSBY CO., INC. BUFFALO
IMPERIAL TRACING CLOTH

SUPPLIES & EQUIPMENT CLASSIFICATION .			
LET	ALTERATION	DATE	BY
D	TRACED UP TO DATE	4-1-38	[illegible]
E	ADDED -2L & -2R ASSEM'S TO DRAWING & B/M.	11-1-40	[illegible]
F	ADDED AN3-6A BOLT & AN3-5A BOLT 3L&R WAS 4L&R	5-12-41	[illegible]
G	Q810-D6-7 (2 REQ) WAS Q810-D6-4 (2 REQ). Q810-D6-10 (4 REQ) WAS Q810-D6-10.5 (4 REQ) NO WT. CHG.	4-15-42	[illegible]
H	ADDED FINISH "2 CLEAR LACQUER" NEG. WT. CHG.	8-21-42	[illegible]

E.O.25593

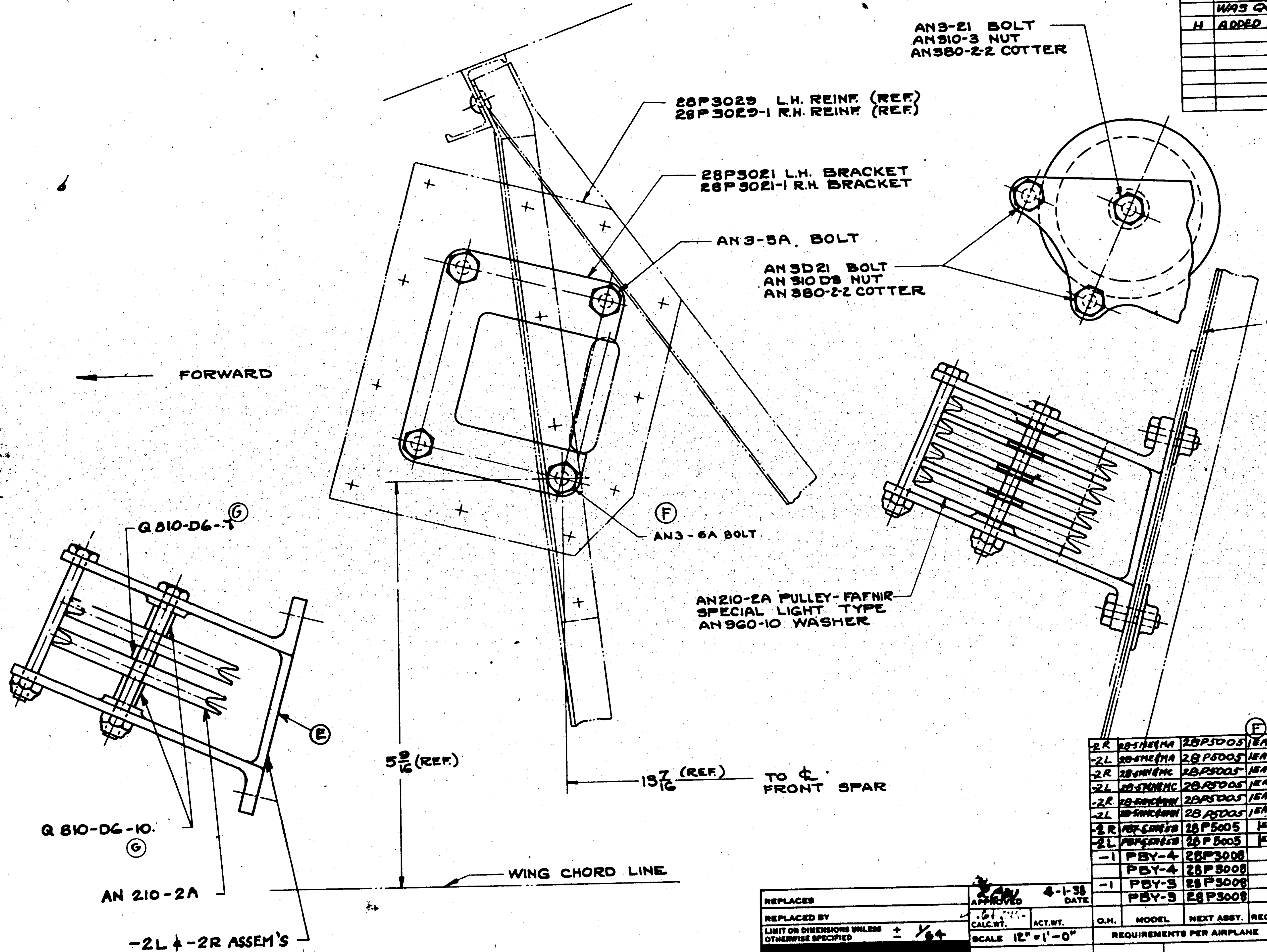

NOTE: AN210-10 "FAFNIR SPECIAL TYPE PULLEY."

O.H.	MODEL	NEXT ASSY.	REQ.		LH	RH	LH	RH	LH	RH
				(F) AN3-6A			1	1		
-2R	28-5MEHMA	28P5005	1EA.	Q810-D6-10			2	2		
-2L	28-5MEHMA	28P5005	1EA.	Q810-D6-7			1	1		
-2R	28-5MNHMC	28P5005	1EA.	28P3021-1		1		1		
-2L	28-5MNHMC	28P5005	1EA.	28P3021	1		1			
-2R	[illegible]	28P5005	1EA.	AN960-10	3	3				
-2L	[illegible]	28P5005	1EA.	AN210-2A	4	4	2	2		
-2R	[illegible]	28P5005	1EA	AN380-2-2	3	3	3	3		
-2L	[illegible]	28P5005	1EA	AN310-3	1	1	1	1		
-1	PBY-4	28P3008		AN310D8	2	2	2	2		
	PBY-4	28P3008		AN3D-21	2	2	2	2		
-1	PBY-3	28P3008		AN3-21	1	1	1	1		
	PBY-3	28P3008		AN3-5A	4	4	3	3		
					-		-2			
REQUIREMENTS PER AIRPLANE				MAT.	PARTS LIST PER ASSY.					

REPLACES		APPROVED [illegible]	4-1-38 DATE				
REPLACED BY		CALC.WT. .61 [illegible]	ACT.WT.				
LIMIT ON DIMENSIONS UNLESS OTHERWISE SPECIFIED	± 1/64	SCALE 12" = 1'-0"					
		AC			BOWEN	G.A. HENEY	[illegible]
		NAVY NOTED	NOTED	NONE	2 CLEAR LACQUER	3-2-37	3-4-37 H.W.H. R.
		MATERIAL	SPEC.	HEAT TREAT	FINISH	DRAFT	CHECK EXAM. ENG.

CONSOLIDATED AIRCRAFT CORP.
BUFFALO, N.Y.
STAMP PT. No. WHERE SHOWN

NAME
BRACKET INST.-ENGINE CONTROLS
NACELLE INB'D. WING RIB PULLEY

OPP. HAND 28P3030-1

SIZE D **28P3030**

SUPPLIES & EQUIPMENT CLASSIFICATION			
LET	ALTERATION	DATE	BY
A	TRACED	4-1-38	[illegible]

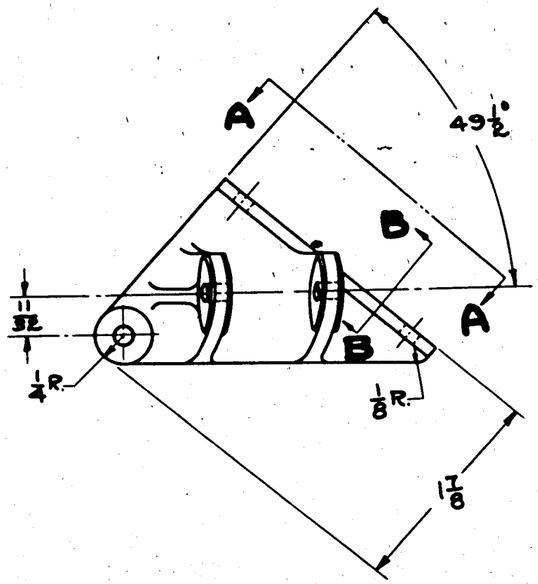

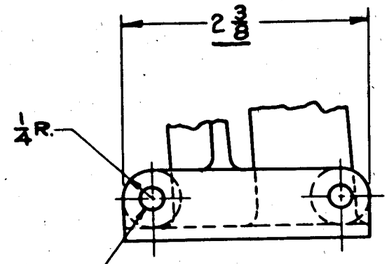

*10 (.193) DRILL 2 HOLES 13/32 DIA. SPOTFACE. ONE SIDE ONLY

VIEW A-A

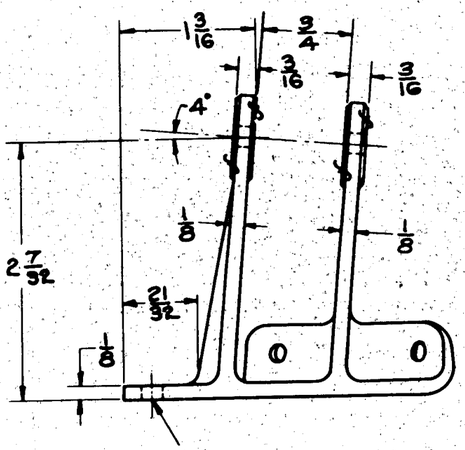

*10(.193) DRILL. 1 HOLE 13/32 DIA. SPOTFACE ONE SIDE ONLY

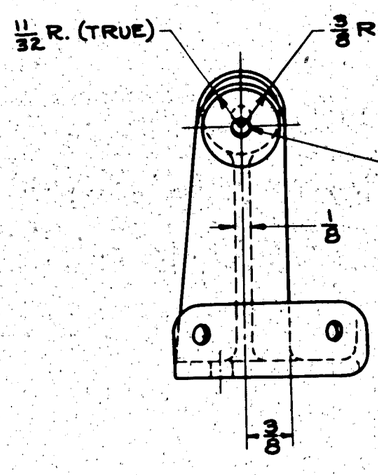

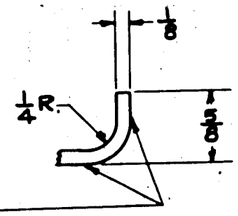

FILE THESE SURFACES SMOOTH NO EXTRA MATERIAL NEEDED ON CASTING.

SECTION B-B

GP-GREEN PRIME

FINISH CODE	
Z	[illegible]
P	[illegible]
AP	[illegible]
C	CADMIUM PLATE

LIMITS ON CASTING ± 1/32
LIMITS ON MACHINING ±.010
ALL FILLETS ⅛R.

C-77713, C-88476

REPLACES	
REPLACED BY	
LIMIT ON DIMENSIONS UNLESS OTHERWISE SPECIFIED ± NOTED	

APPROVED RCN 4-1-38 DATE

CALC. WT. .11 ACT. WT.

SCALE 12" = 1'-0"

AC

NAVY AL. ALLOY CASTING 195 T4

MATERIAL

CONSOLIDATED AIRCRAFT CORP. BUFFALO, N.Y.

STAMP PT. No. WHERE SHOWN

O.H.	MODEL	NEXT ASSY.	REQ.	ST'D PARTS	LH REQ.	RH REQ.	PART NO.	LH REQ.	RH REQ.
	PBY-5A	28P5109	2						
	PBY-4	28P3001							
	PBY-5	28P3001							

REQUIREMENTS PER AIRPLANE | MAT. | PARTS LIST PER ASSY.

46A1-CL4	29,000 #/□"	Z-P-2 GP
SPEC.	HEAT TREAT	FINISH

RELEASED	PULLED	CHKD.	
3-30-37	4-6-37	PFEFFETT	R.
DRAFT	CHECK	EXAM.	ENG.

OPP. HAND

NAME BRACKET – RIGHT STARTER RELEASE IDLER

DWG. SIZE D

28P3039

SULLIVAN-MORGENTHAU CO., INC. BUFFALO
INFORMAL TRACING CLOTH

PART NO.	A	B	C	D
	CABLE NO.	CABLE NO.	CABLE NO.	CABLE NO.
28P3042-2	15' 3"	12' 11"	3' 1 3/16"	2' 8 1/2"
	-4	-5	-6	-7
28P3042-3	13' 3"	12' 11"	1' 10 1/2"	1' 5 1/4"
	-8	-9	-10	-11
28P3042-22	15' 3"	12' 11"	2' 11 5/16"	2' 11 5/16"
	-4	-5	-16	-17
28P3042-23	13' 3"	12' 11"	1' 8 5/16"	1' 8 5/16"
	-8	-9	-20	-21
28P3042-24	13' 3"	12' 11"	3'-0"	3'-0"
	-4	-5	-27	-26

E.O. NO.	LET.	ALTERATION	DATE	BY
49108 9	H	(4) NOTE: 442 LBS. WAS		
		288 LBS. NO WT. CNG.	6-29-42	

E.O. 22607 A

E.O. A5086 PBY-5 ALL

E.O. A4338 PBY(5) 28-(5) ALL

SUPPLIES & EQUIPMENT CLASSIFICATION			
LET	ALTERATION	DATE	BY
B	TRACED	4-4-38	
C	REMOVED PBY-4 REQ. FOR -2 & -3		
	ADDED -16, -17, -20, -21, -22, -23	3-22-39	
D	CHANGED NOTE "PROOF LOAD TO 440#" TO "PRE-STRETCH TO 288#"	11-1-40	
E	ADDED -24 ASSY. SAME AS -22	4-1-41	
	EXCEPT -26 & -27 REPLACES -16 & -17. CHGD. FINISH SPEC TO PARALKETONE, WAS W.L.T.		
F	CHANGED R.P.A. -23 FROM 0 TO 1		
	REQ. # -24 FROM 2 TO 1 REQ	5-26-41	DKK
G	CREATED SUB ASSY -38, -39, -40, -41, -42	8-11-41	
	CONSISTING OF -19, -26, -27, & K, QG330-3 & QG342-3R		
	CREATED SUB ASSY -40, -41 CONSISTING OF -8, -9 QG342-3L, & QG342-3R		
	CREATED SUB ASSY -39 CONSISTS OF -12 QG342-3L QG342-3R		
	CREATED SUB ASSY -38, -37 CONSISTS OF -5, -9, QG342-3L, QG342-3R, 5C052-1, 5C052-2		
	CREATED SUB ASSY -38, -39, -40, -41, -42		
	CONSISTS OF -7, -17, -26, -11, -21, QG342-3L & QG330-3 ALTERNATE PART		

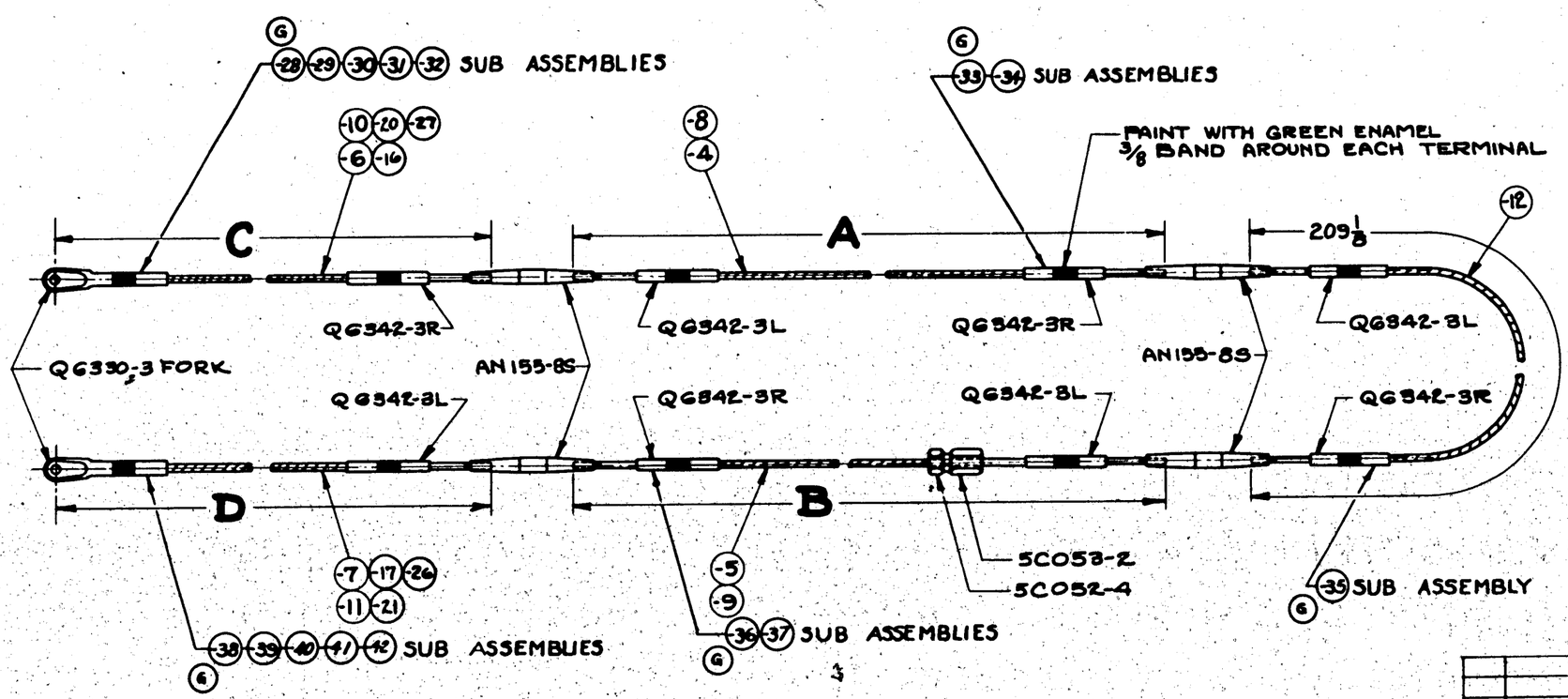

(4) (5) (6) (7) (8) (9) (10) (11) (12) (16) (17) (20) (21) (27) (24)

3/32 DIA. 7x7 PREFORMED TINNED STEEL AIRCRAFT CABLE SPEC 22C2 (F)
FINISH: PARALKETONE (E)

NOTE:-
SEE DWG. Q6342 FOR SWAGING OPERATION ON TERMINALS.
SWAGE ALL ENDS PER SPEC. T-46
(D) ← PRE-STRETCH TO 442 LBS.
(H)

Q6330-3	/	/	/	/	/												
Q6342-3L	/	/	/	/	/												
-21				/													
-11		/															
-26					/												
-17			/														
-7	/																
SUB ASSY	-38	-39	-40	-41	-42												
5C052-4	/	/															
5C053-2	/	/															
Q6342-3R	/	/															
Q6342-3L	/	/															
-9		/															
-5	/																
SUB ASSY	-36	-37															
Q6342-2R	/																
Q6342-3L	/																
-12	/																
SUB ASSY	-35																
Q6342-2R	/	/															
Q6342-3L	/	/															
-4		/															
-8	/																
SUB ASSY	-33	-34															
Q6342-3R	/	/	/	/	/												
Q6330-3	/	/	/	/	/												
-16			/														
-6	/																
-27					/												
-20				/													
-10		/															
SUB ASSY	-28	-29	-30	-31	-32												
AN155-8S	4	4	4	4	4												
SUB ASSY 42					1												
-41				1													
-40			1														
-39		1															
-38	/																
-37		/		/													
-36	/		/		/												
-33	/	/	/	/	/												
-34	/		/		/												
-35		/		/													
-32					/												
-31				/													
-30			/														
-29		/															
SUB ASSY	/																
	-2	-3	-22	-23	-24												

-24	PBY-5B	28P5006	1	
-23	PBY-5B	28P5005	1	
-24	28-5MN	28P5006	1	
-23	28-5MN		1	
-24	28-5MB		1	
-23	28-5MA		1	
-24	28-5MC		1	
-23	28-5MC		1	
-24	28-5MA		1	
-23	28-5MA		1	
24	28-5MN		1	
23	28-5MN		1	
-24	28-5AMB		1	
-23	28-5AMC		1	
-24	PBY-5A		1	
-23	PBY-5A		1	
-23	PBY-5	28P5006	1	(F)
-24	PBY-5	28P5005	1	
-23	PBY-4	28P3008		
-22	PBY-4	28P3008		
-3	PBY-3	28P3008		
-2	PBY-3	28P3008		

REPLACES	APPROVED 4-4-38	O.H.	REQUIREMENTS PER AIRPLANE
REPLACED BY	DATE	MODEL	
LIMIT ON DIMENSIONS UNLESS OTHERWISE SPECIFIED ± 1/8	CALC.WT. -2: L.16 -3: L.16 ACT.WT.	NEXT ASSY.	
	SCALE 6"=1'-0"	REQ.	
	AC		
	NAVY NOTED	NOTED	NONE
	MATERIAL	SPEC.	HEAT TREAT

MAT. PMN — NOTED — FINISH

PARTS LIST PER ASSY.

DRAWN	MEMBY	DWG.	
9-5-37	9-18-37	PERMIT	R.
DRAFT	CHECK	EXAM.	ENG.

CONSOLIDATED AIRCRAFT CORP. BUFFALO, N. Y.
STAMP PT. No. WHERE SHOWN

NAME: CABLE ASSEMBLY ENGINE CONTROLS - THROTTLE

OPP. HAND

DWG. D 81122 — 28P3042

BULLARD-DIEDERICH CO., INC. BUFFALO
INDUSTRIAL TRACING CLOTH

LET	ALTERATION	DATE	BY
H	REDRAWN & REVISED AS PER E.O. A23660. WT. INCREASE .17#		

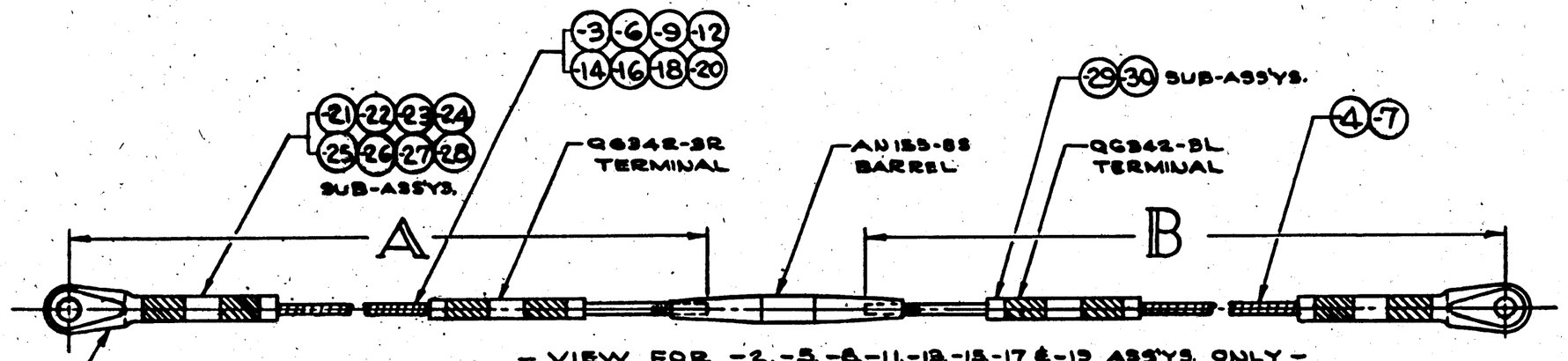

– VIEW FOR -2,-5,-8,-11,-13,-15,-17 & -19 ASS'YS. ONLY –

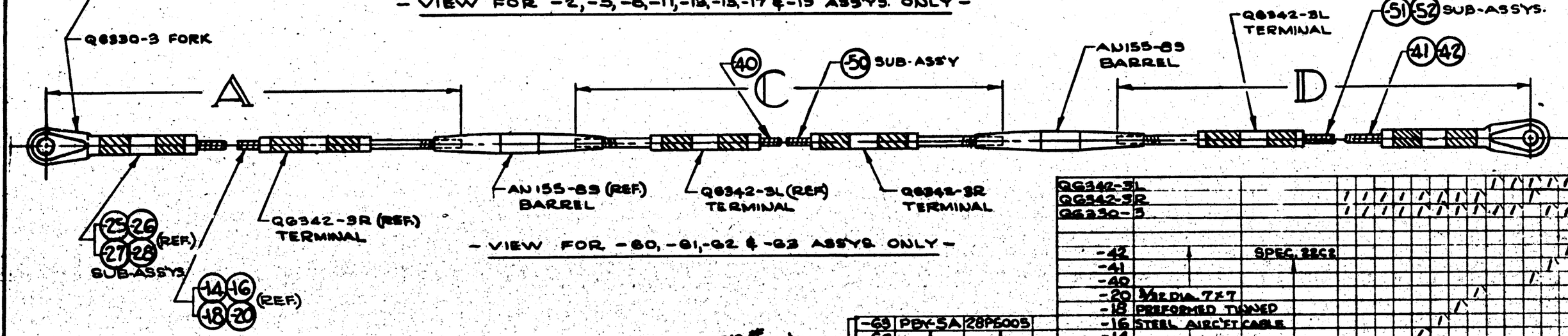

– VIEW FOR -60,-61,-62 & -63 ASS'YS ONLY –

CABLE LENGTHS							
"A"		"B"		"C"		"D"	
-3	32⅝	-4	101⅞	-40	76¼	-41	18⅝
-6	34¼	-7	97⅞			-42	22¼
-9	18⅝						
-12	19¼						
-14	34¼						
-16	35¼						
-18	19⅝						
-20	19¼						

NOTES:
1. SEE D'WG. #QG342 OR SPEC. T-46 FOR SWAGING OPERATION ON TERMINALS. SWAGE ALL ENDS.
2. PROOF LOAD TO 288 LBS.
3. PAINT AROUND EACH TERMINAL, 2-⅛ BANDS WITH RED ENAMEL.

-63	PBY-5A	28P5005	
-62			
-61			
-60			
-19			
-17			
-15			
-13	PBY-5A		
-63	PBY-5		
-62			
-61			
-60			
-19			
-17			
-15			
-13	PBY-5	28P5005	
-9	PBY-4	28P3006	
-7	PBY-4		
-15	PBY-4		
-13	PBY-4		
-11	PBY-3		
-8	PBY-3		
-5	PBY-3		
-2	PBY-3	28P3006	
ASSY DASH NO.	MODEL	NEXT ASSY.	REQ.

C-77713 #494 & ON C-88476 -ALL

C-77713 TO HULL #493

C-#91876 C-#70496

#1-14 INCL

#15 & ON

REQUIREMENTS PER AIRPLANE

REPLACES "B" SIZE 28P3045 OP 4-12-37 | J.B.J. CALC. WT.

REPLACED BY | ASY. WT.

SCALE 12"=1'-0" | ± 1/8

STAMP PART NUMBER WHERE SHOWN

PARTS LIST PER ASSY.														
PART No.	STOCK	MATERIAL	SPEC.	-2 REQ.	-5 REQ.	-8 REQ.	-11 REQ.	-13 REQ.	-15 REQ.	-17 REQ.	-19 REQ.	-60 REQ.	-61 REQ.	-63 REQ.
QG342-3L				1										
QG342-3R					1									
QG330-3						1								
-42		SPEC. 22C2					1							
-41								1						
-40									1					
-20	3/32 DIA. 7x7									1				
-18	PREFORMED TINNED										1			
-16	STEEL AIRC'FT CABLE											1		
-14													1	
-12														1
-9														
-7														
-6														
-4														
-3		SPEC. 22C2												
	SUB-ASS'YS.			-21	-22	-23	-24	-25	-26	-27	-28	-29	-30	-51 -52
AN155-8S														2 2 2 2
-52	SUB-ASS'Y.													
-51														
-50														
-29														
-28														
-27														
-26														
-25														
-24														
-23														
-22														
-21	SUB-ASS'Y.													

AC			BOWEN	HOLKY		LEW	O.K.M.
NAVY NONE	FINISH CABLES-R.R		4-12-37	4-12-37			KING
HEAT TREAT	FINISH		DRAFT	CHECK	STRUCT	MAT	APPROV ENG

NAME CABLE ASS'Y.- ENG. CONTROLS-MIXTURE

CONSOLIDATED AIRCRAFT CORP. SAN DIEGO, CALIF.

OPP. HAND

DWG. D SIZE

28P3045

R

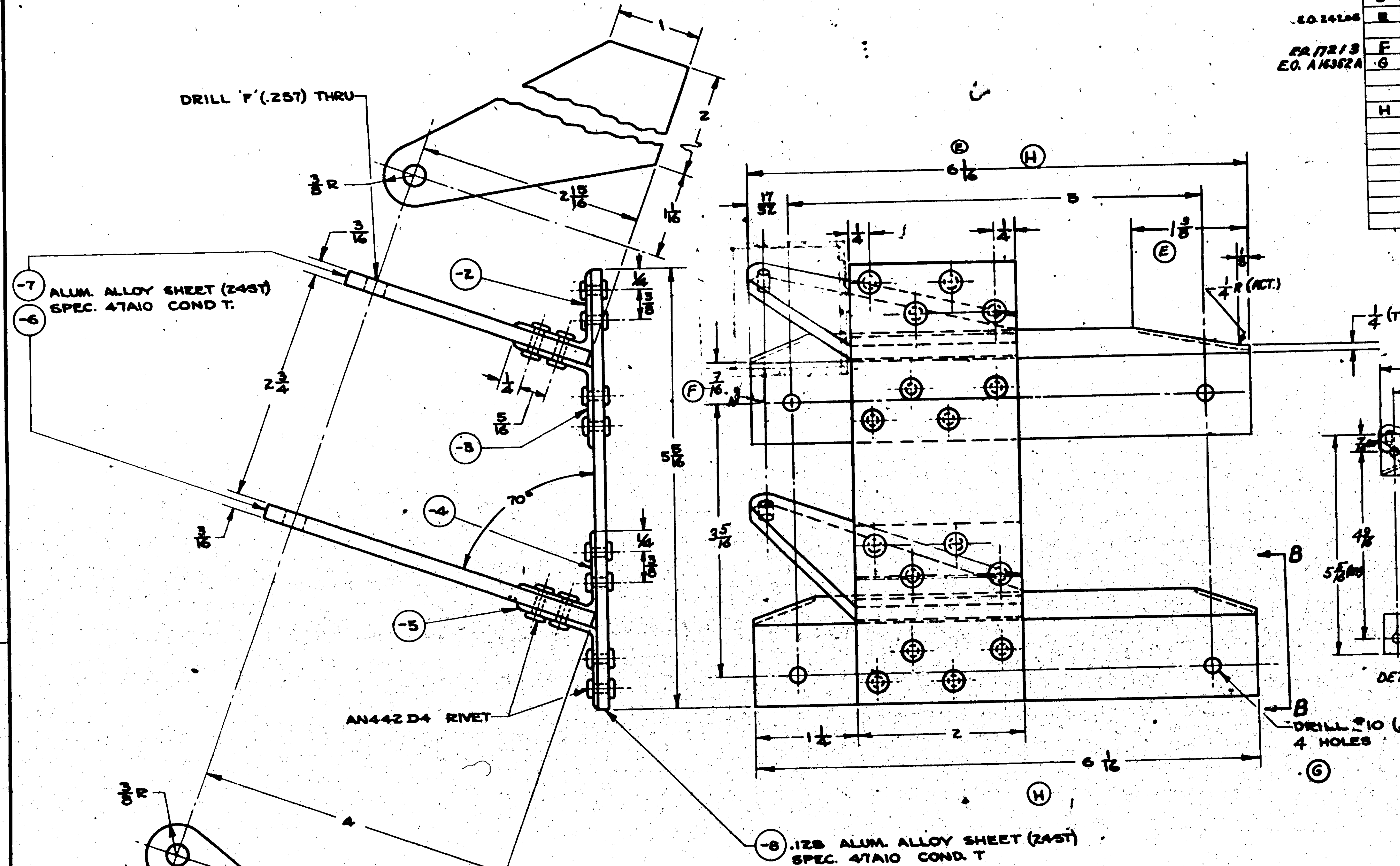

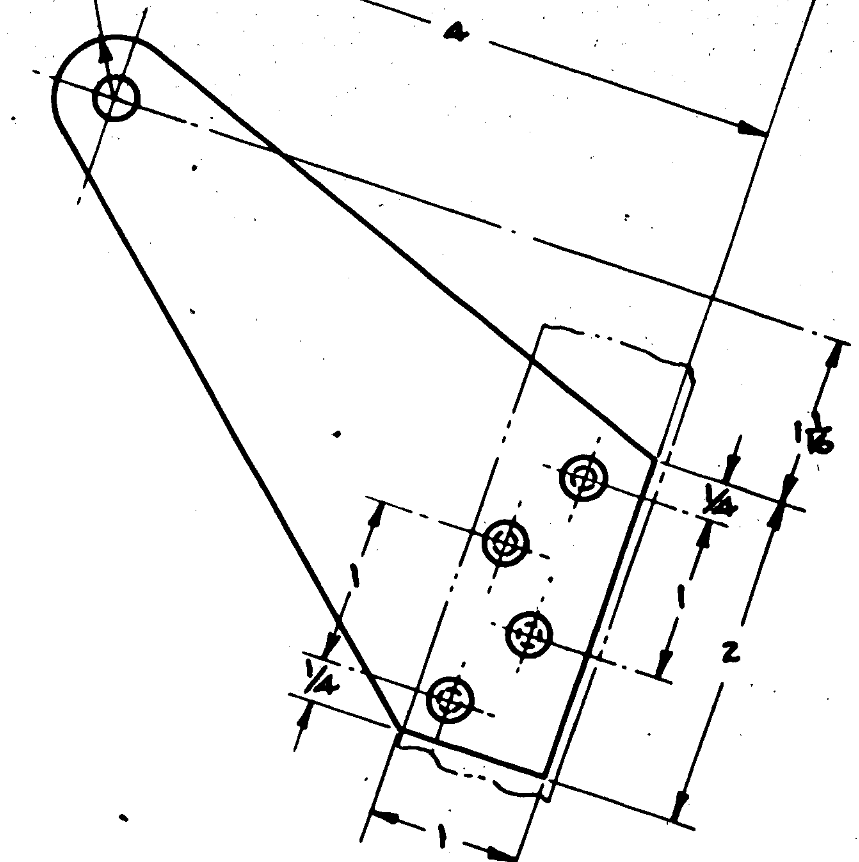

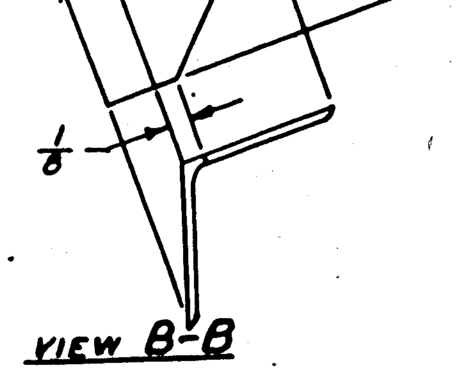

TRIM ENDS OF -11, -3 & -5 AS SHOWN EXCEPT AS NOTED

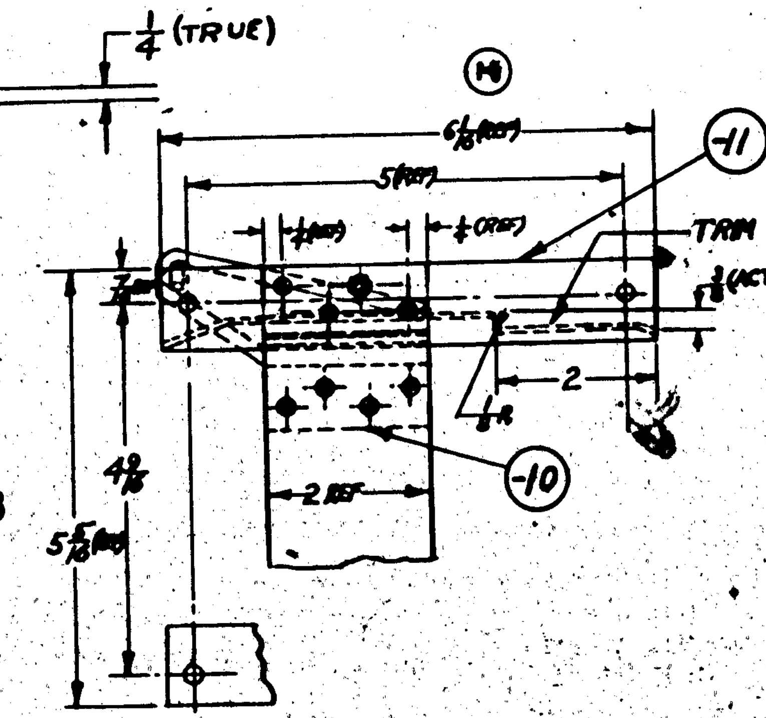

DETAIL OF -10 & -11 FOR -50 ASSY. ONLY
SCALE 6"=1'0"

NOTE :~
-2, -3, -4, -5, -10 & -11 MADE FROM 1×1×1/16 ALUM. ALLOY EXTRUDED ANGLE.
ALCOA DIE # K 78 J .(24-S0)
SPEC. 47A9 COND. A
H.T. SR-53

CONT. 77713 & 88476
CONT. 70496

SUPPLIES & EQUIPMENT CLASSIFICATION

	LET	ALTERATION	DATE	BY
	D	TRACED	3-17-38	
E.O. 24206	E	END TRIMMED TO 1 3/8 WAS 2 1/16. 6 1/16 WAS 6 13/16	10-21-40	
E.R. 17213	F	7/16 DIM WAS 1/2	2-7-41	
E.O. A16352A	G	CREATED -50 ASSY. CHG'D NOTE "DRILL 4 HOLES #10 (.193)" WAS "DRILL 5 HOLES ---" (NO WT. CHG.)	3-26-42	
	H	CHANGED RIVET PATTERN. NO WT. CHG.	9-11-43	

GP-GREEN PRIME

FINISH CODE	
E	[redacted]
P	[redacted]
AP	[redacted]
C	[redacted]

O.H.	MODEL	NEXT ASSY.	REQ.	ST'D PARTS	PART NO.	-0 REQ.	-50 REQ.
-0	28-5AMN	28P3067	1				
-0	PBY-5B		1		-11		1
-0	28-5AMC		1		-10		1
-0	28-5MN		1				
-0	28-5ME		1		-8	1	1
-0	25-5MC		1		-7	1	1
-0	28-5MA		1		-6	1	1
-50	PBY-5A		1		-5	1	1
-0	PBY-5A		1		-4	1	1
-0	PBY-5	28P3067	1		-3	1	
-0	PBY-4	28P3067	1				
-0	PBY-3	28P3067	1	AN442D4	28P3065 -2	1	

REQUIREMENTS PER AIRPLANE | S.C. MAT. | PARTS LIST PER ASSY. -0 -50

REPLACES	APPROVED LCW	DATE 3-17-38
REPLACED BY	CALC. WT. .69 LLR 2-9-38	ACT. WT.
LIMIT ON DIMENSIONS UNLESS OTHERWISE SPECIFIED ± 1/64	SCALE 12"=1'0" & NOTED	

[redacted]

AC				
NAVY NOTED	NOTED	NOTED	Z-P-2[illegible] GP	
MATERIAL	SPEC.	HEAT TREAT	FINISH	

DRAFT	CHECK	EXAM.	ENG.
Kenton? 2-2-38	Follick 2-2-38	O.N.M.	R

CONSOLIDATED AIRCRAFT CORP.
SAN DIEGO, CALIF.
STAMP PT. NO. WHERE SHOWN

NAME BRACKET ASSEM.~
R.H. NAC.~THROTTLE & MIX. BELLCRANK

OPP. HAND
DWG. SIZE D 28P3065

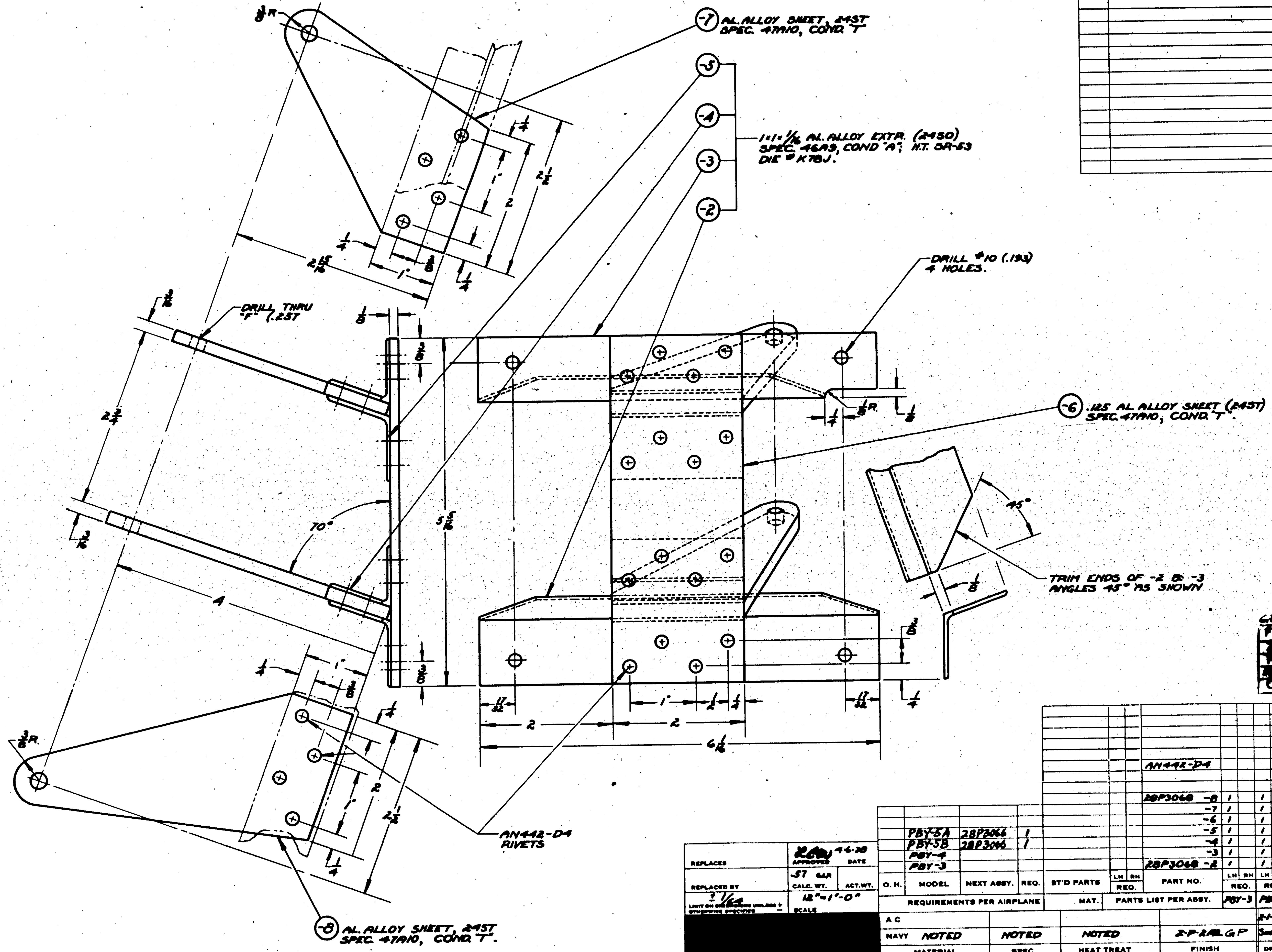

SUPPLIES & EQUIPMENT CLASSIFICATION

LET	ALTERATION	DATE	BY
C	TRACED	4-6-38	Spacy

GP-GREEN PRIME

FINISH COD[redacted]

C [redacted] PLATE

ST'D PARTS	LH REQ.	RH REQ.	PART NO.	PBY-3 LH REQ.	PBY-3 RH REQ.	PBY-4 LH REQ.	PBY-4 RH REQ.	LH REQ.	RH REQ.	LH REQ.	RH REQ.	LH REQ.	RH REQ.
			AN442-D4										
			28P3068-8	1		1							
			-7	1		1							
			-6	1		1							
			-5	1		1							
			-4	1		1							
			-3	1		1							
			28P3068-2	1		1							

MAT. — PARTS LIST PER ASSY.

O. H.	MODEL	NEXT ASSY.	REQ.
	PBY-5A	28P3066	1
	PBY-5B	28P3066	1
	PBY-4		
	PBY-3		

REQUIREMENTS PER AIRPLANE

REPLACES	APPROVED: RCW	DATE: 4-6-38
REPLACED BY	CALC. WT.: .57 GAR	ACT. WT.
LIMIT ON DIMENSIONS UNLESS OTHERWISE SPECIFIED: ± 1/64	SCALE: 12"=1'-0"	

	MATERIAL	SPEC.	HEAT TREAT	FINISH	DRAFT	CHECK	EXAM.	ENG.
A C					2-1-38	2-2-38	G.W.M.	
NAVY	NOTED	NOTED	NOTED	2-P-2 AL. GP	Suggs	Pollich	Hammit	R.

CONSOLIDATED AIRCRAFT CORP. SAN DIEGO, CALIF.

STAMP PT. NO. WHERE SHOWN

NAME: BRACKET ASS'Y. – LEFT NACELLE THROTTLE & MIXT. – BELL-CRANK

OPP. HAND

DWG. SIZE D — 28P3068

PRINTED ON "IMPERIAL" TRACING CLOTH

EQ 2 3412

LET	ALTERATION	DATE	BY
A	ADD TOLERANCES TO DIMS. SHT. 1	10-2-40	[illegible]
B	IN B/M. REPLACED "AL. ALLOY CAST. SPEC. "46AI CLASS 4, 2 H.T. 22,000 #" WITH "NOTED". ADDED MAT'L. NOTES ⑧ 1 & 2.		
	NO W.I.CHG.	7-19-43	[illegible]

FOR PRESS FIT WITH KINGSWELL PRODUCTS CO. OILITE BUSHING #A-604-1 (REF.)

REAM MUST BE IN LINE WITH FINISHED SURFACE WITHIN .002

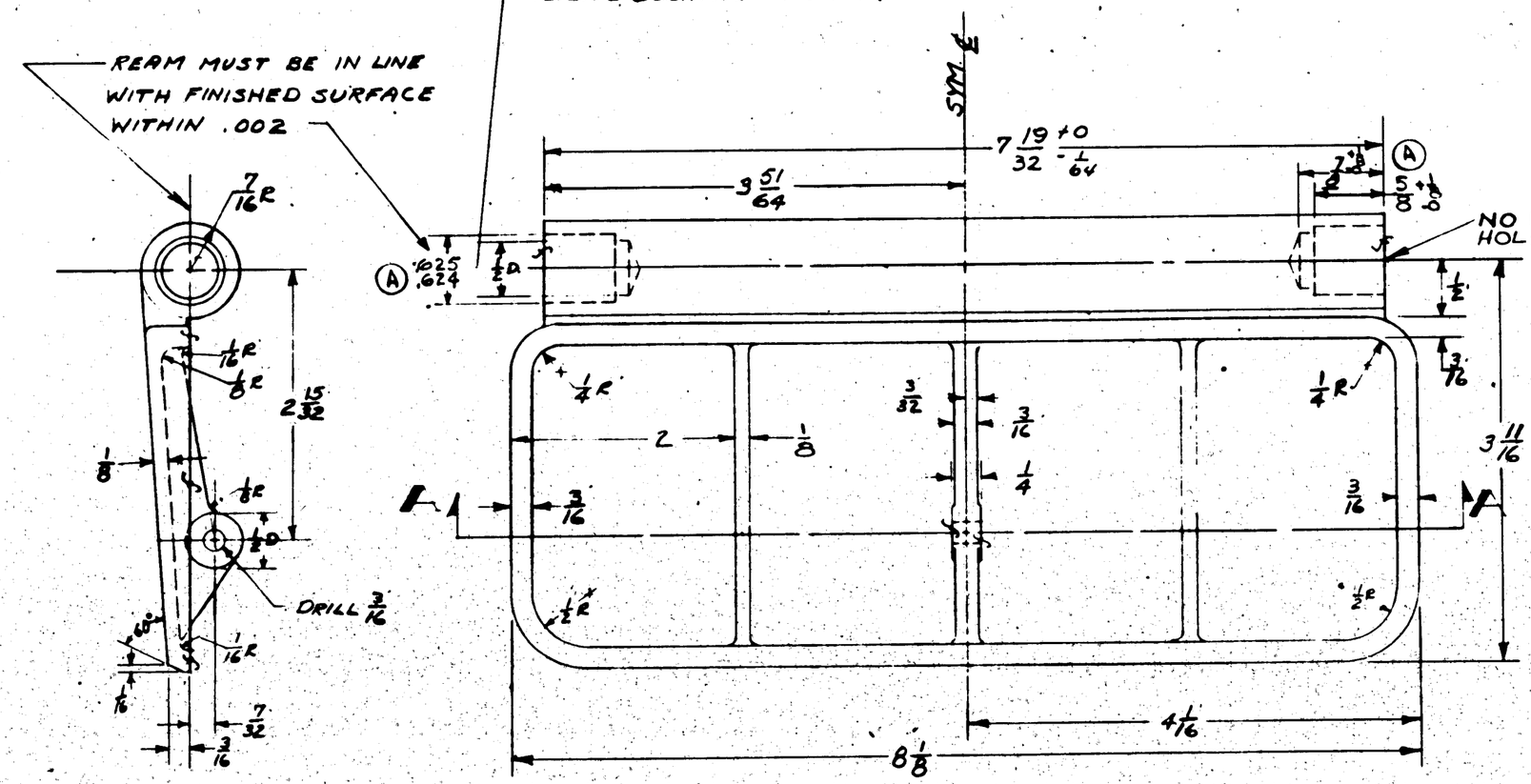

LIMITS ON DIMENSIONS UNLESS OTHERWISE NOTED: CASTING ±1/32
MACHINE ±.010

FINISH CODE	
Z	ANODIC TREATMENT
P	P-27 PRIMER
AP	ALUMINIZED PRIMER
C	CADMIUM PLATE

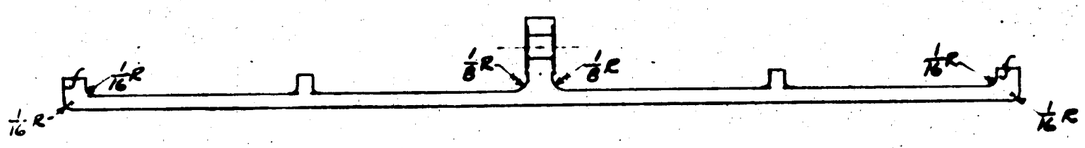

SECT. A-A

SCALE: 12"=1'-0"

MATERIAL NOTES-

1.- 195T4 AL. AL. CASTING, SPEC. AN-QQ-A-390 CL. I,
Ⓑ T.S. 29,000 P.S.I., OR
2.- S195T6 AL. AL. CASTING, SPEC. AN-A-5 CL. II, T.S. 32,000 P.S.I.

ASSY. DASH NO.	MODEL	NEXT ASSY	REQ.
	28-5AMK. AMN	28P5008	2EA
	28-5MN, ME	28P5008	2EA
	28-5MA, MC	28P5008	2EA
	PBY-5B	28P5008	2
	PBY-5A	28P5008	2
	PBY-5	28P5008	2

REQUIREMENTS PER AIRPLANE

REPLACES — CALC. WT.

REPLACED BY — ASY. WT.

LAYOUT OR DIMENSIONING DRAWING SHOWING ± NOTED — SCALE 12"=1'-0"

STAMP PART NUMBER WHERE SHOWN

PART NO	STOCK	MATERIAL	SPEC.	LH REQ.	RH REQ.	LH REQ.	RH REQ.	LH REQ.	RH REQ.	LH REQ.	RH REQ.	LH REQ.	RH REQ.
PARTS LIST PER ASSY.	NOTED	NOTED	NOTED	-0		-2		-3		-4		-5	

AC		Z-P-AP EXCEPT AS NOTED	Lockheed	Wells		
NAVY NOTED			8/22/39	12-13-39	12/14/39	12/14/39
HEAT TREAT		FINISH	DRAFT	CHECK	STRUCT	MAT	APPROV	ENG.

NAME VALVE
CARBURETOR HOT AIR INLET

OPP. HAND

CONSOLIDATED AIRCRAFT CORP. SAN DIEGO, CALIF.

SIZE D — 28P5012

E.O. 20687

LET	ALTERATION	DATE	BY
A	Dia not specify "ON ASSY."	10-21-39	DON

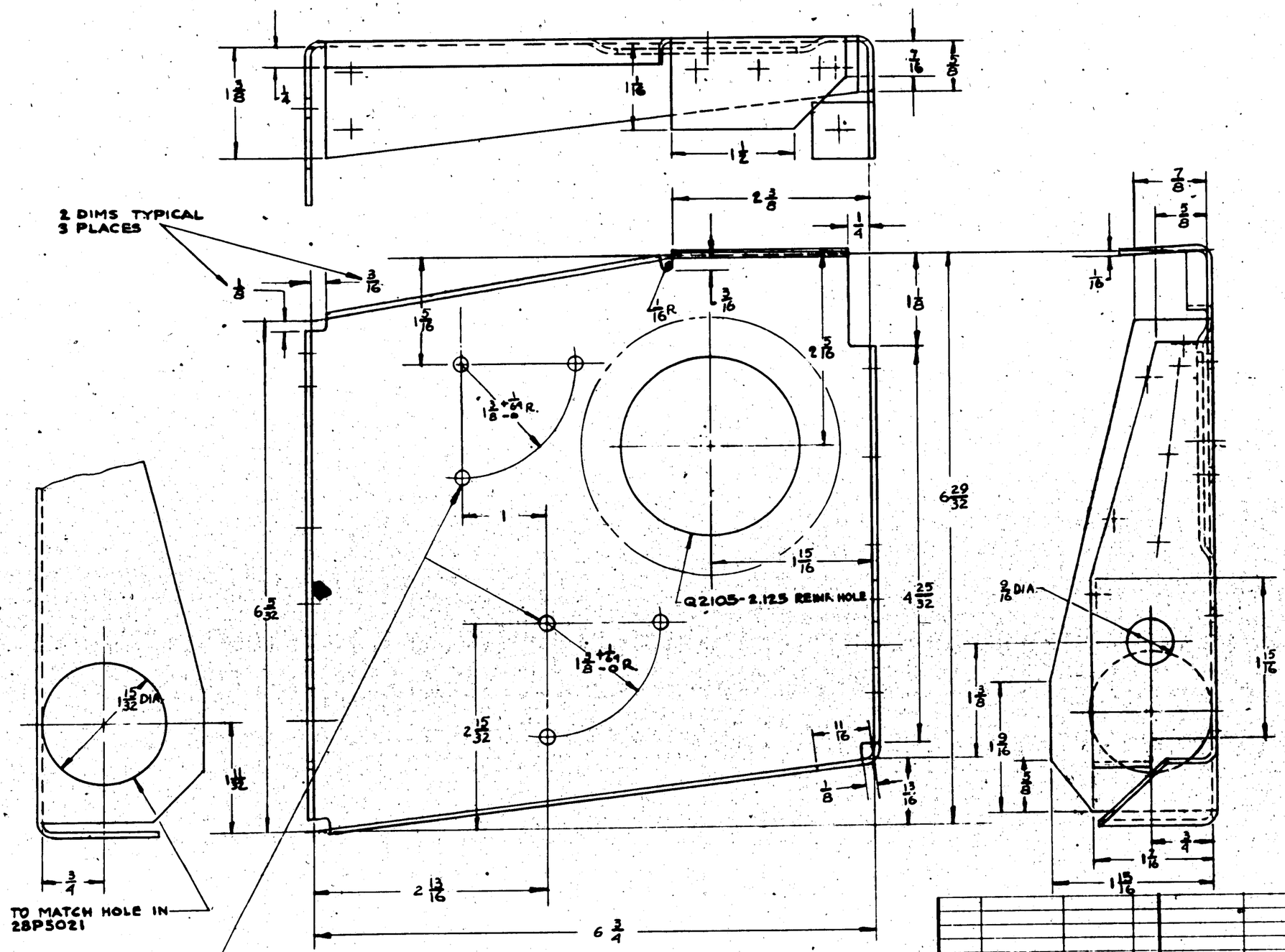

NOTE —
DRILL 1/16
14 PILOT HOLES
LOCATE APPROX. AS SHOWN
ALL EDGE DISTANCES 5/16
ALL BEND RADII 1/8

FINISH CO.

Z	ANODIC TREATMENT
P	P-27 PRIMER
AP	ALUMINIZED PRIMER
C	CADMIUM PLATE

ASSY DASH NO.	MODEL	NEXT ASSY.	QUAN.
-R	PBY-5A&B	28P5006	1 EA.
-L	PBY-5A&B	28P5006	1 EA.
R	PBY-5	28P5006	1
L	PBY-5	28P5006	1

REQUIREMENTS PER AIRPLANE

REPLACES — CALC WT.

REPLACED BY — ACT. WT.

SCALE 12 1/2 = 1'-0"

STAMP PART NUMBER WHERE SHOWN

PART NO.	STOCK	MATERIAL	SPEC.	LH REQ. -0	RH REQ. -2	LH REQ. -3	RH REQ. -4	LH REQ.	RH REQ. -5
28P5019R	.064 X 10 X 10 1/2	24SO ALCLAD	17AB COND A	1					
28P5019L	.064 X 10 X 10 1/2	24SO ALCLAD	17AB COND A		1				

PARTS LIST PER ASSY.

AC
NAVY SR53
HEAT TREAT

Z-P
FINISH

DRAFT	CHECK	STRUCT.	MAT.	APPROV.	ENG.
12-7-39	NB-39				

NAME BRACKET (BLK'D #4)
ENGINE CONTROL (OUTB'D.)

CONSOLIDATED AIRCRAFT CORP. San Diego, Calif.

OPP. HAND 28P5019R

DWG. D SIZE 28P5019

E.O. 22512
E.O 20687

LET	ALTERATION	DATE	BY
A	Q2100-2.125 WAS Q2105-2.125	7/9/40	MURRAY
B	"ON ASSY" ADDED TO NOTE	7/10/40	LINDSAY

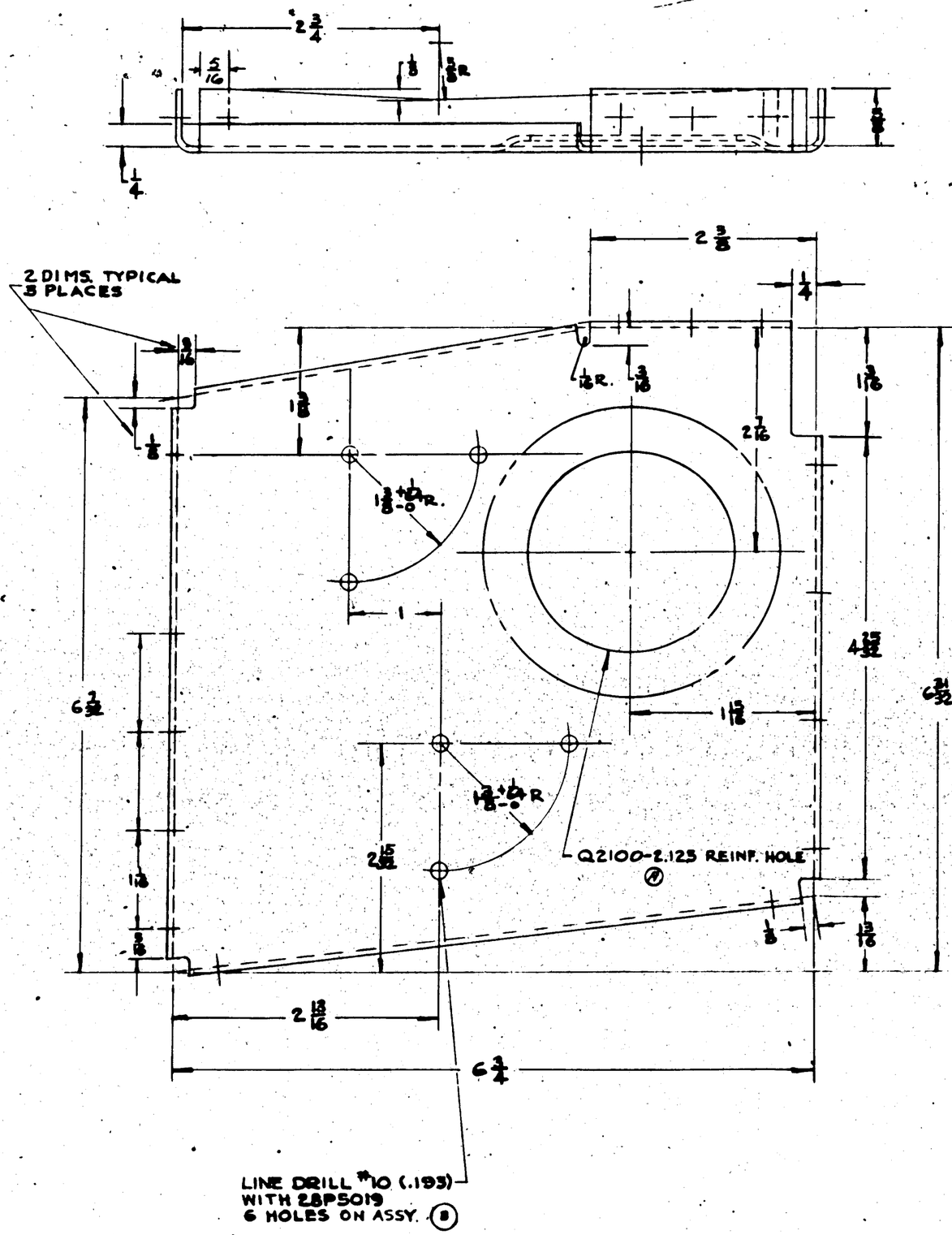

NOTE -
UNLESS OTHERWISE NOTED
DRILL 1/16
14 PILOT HOLES
ALL EDGE DISTANCES 5/16
ALL BEND RADII 1/8

FINISH CODE	
Z	ANODIC TREATMENT
P	P-27 PRIMER
AP	ALUMINIZED PRIMER
C	CADMIUM PLATE

ASSY. DASH NO.	MODEL	NEXT ASSY	REQ
-R	PBY-6A&B	28P5006	1
-L	PBY-5A&B	28P5006	1
R	PBY-5	28P5006	1
L	PBY-5	28P5006	1

REQUIREMENTS PER AIRPLANE

REPLACES — CALC WT.
REPLACED BY — ACT WT.
LIGHT OR DISCREPANCIES UNLESS OTHERWISE SPECIFIED 1/32
SCALE 12" = 1'-0"
STAMP PART NUMBER WHERE SHOWN

PART NO	STOCK	MATERIAL	SPEC.	LH REQ. -0	RH REQ. -2	LH REQ. -3	RH REQ. -4	LH REQ. -5	RH REQ.
28P5020R	.064-x7¾-x8½	24SO ALCLAD	4/A8 COND A	1					
28P5020L	.064-x7¾-x8½	24SO ALCLAD	4/A8 COND A		1				

PARTS LIST PER ASSY.

A C
NAVY SR53 HEAT TREAT
Z-P FINISH
12-7-39 DRAFT
12-23-39 CHECK
STRUCT.
MAT.
APPROV.
ENG.

NAME BRACKET (ELKH'D #4) ENGINE CONTROLS (INB'D)
CONSOLIDATED AIRCRAFT CORP. SAN DIEGO, CALIF.
OPP. HAND 28P5020R
DWG. SIZE D
28P5020

LET	ALTERATION	BY
A	DIM 5" WAS 3 11/32	5-7-43 J. MALLEY
	" 2 7/8 " 1 1/2	
	" 1 5/16 " 1 1/8	
	ANGLE 18½° - 22½°	
B	REPLACED -6 WITH -9 & -10	
	CH'D. REQ'D. FROM 1	
	TO 2 REQ.	
	ANGLE 16½° WAS 18½°.	
	DIM. 6 23/32 WAS 5".	6-2-43 [illegible]
	DIM. 3 5/8 WAS 2 7/8.	
C	AN3-4A WAS AN3-4, AN310-3 WAS	
	5 REQ'D. AN380-C2-2 WAS 5 REQ'D	
	ADDED AC365-1032 (4)	6-17-43 [illegible]
D	IN B/M, FOR -7, REPLACED "K5401 X 2 1/8,	
	AL ALLOY, 46A9-T" WITH "Y-2-A27RT X	
	3"; FOR -9, REPLACED "K5401 X T½, AL	
	ALLOY, 46A9-T" WITH "Y-2-A27RT X T½";	
	FOR -10, REPLACED "K5401 X 8, AL. ALLOY	
	46A9-T" WITH "Y-2-A27RT X 8." BROT	
	RELEASES UP TO DATE. WT. CHG. NEG. 4-29-43 [illegible]	

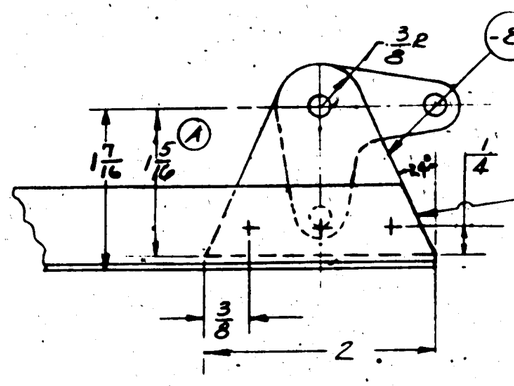

VIEW B-B

TRIM ENDS AS SHOWN

ALL RIVETS AN442-D4
LOCATE APPROX. AS SHOWN
MIN. EDGE DISTANCE 1/4

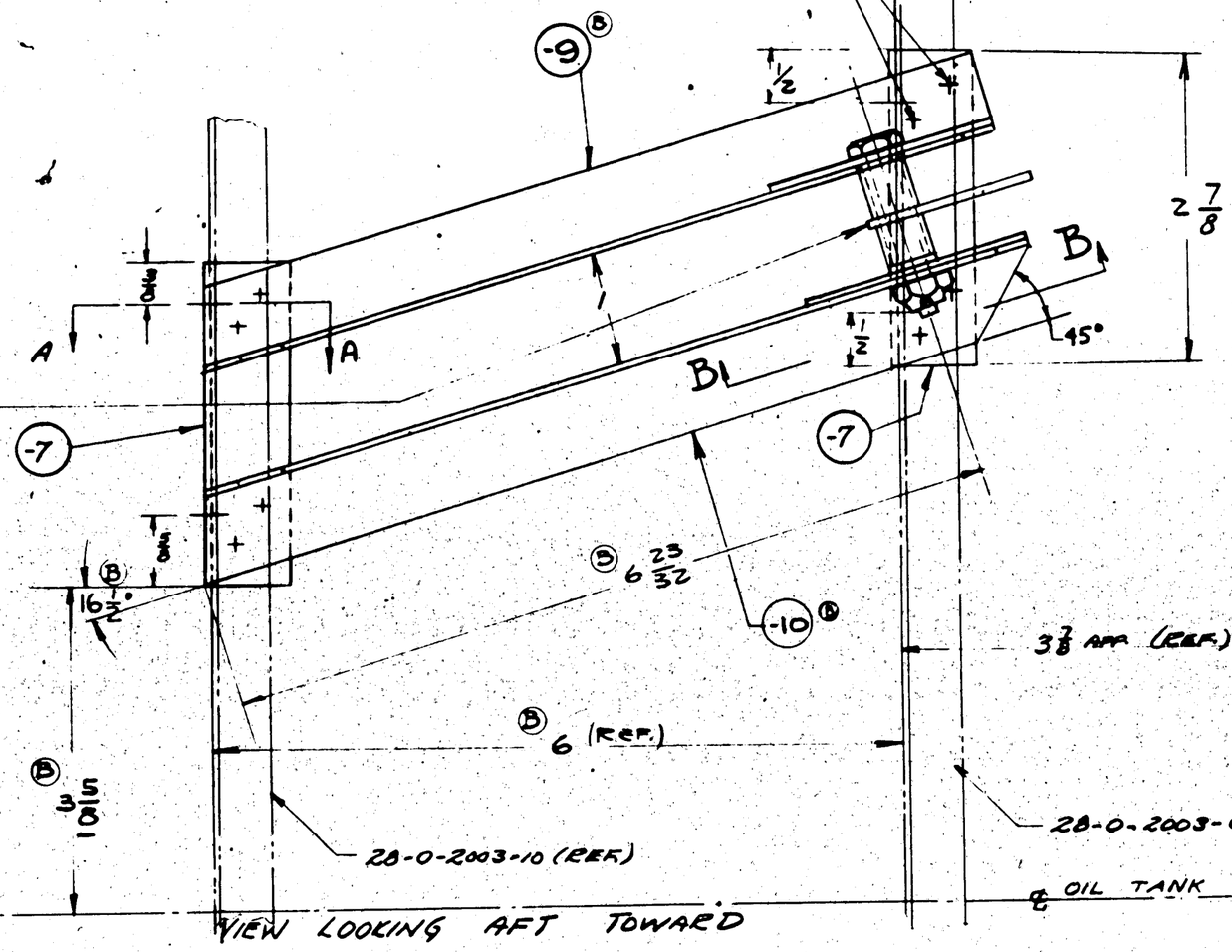

VIEW LOOKING AFT TOWARD OIL TANK

28P2025	BELLCRANK	
28P2019-3	BUSHING	
AN 3-14	BOLT	
AN 310-3	NUT	
AN 380-C2-2	COTTER	
AN 960-D10 (2)	WASHER	
Q7102-AL10 (2)	WASHER	

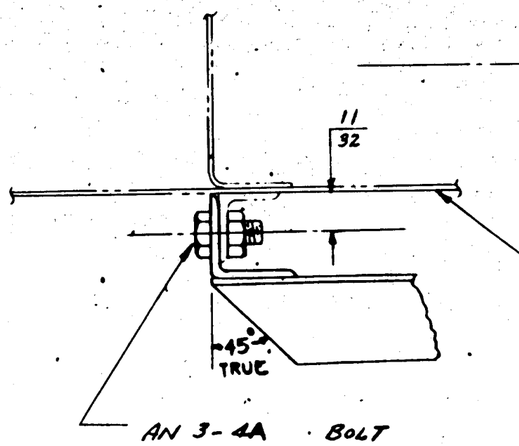

AN 3-4A · BOLT
AC365-1032 NUT

Q 7102-AL10 WASHER (2) 4 PLACES

FINISH: -6, -7, -8 Z-P-AP

SECTION A-A

ASSY DASH NO.	MODEL	NEXT ASSY	REQ	
	28-5AMC & AMN	28P5026	2 EA	AN 960-D10
	28-5ME & MN	28P5026	2 EA	AN 380-C2-2
	28-5MA & MC	28P5026	2 EA	AN 310-3
	PBY-5A	28P5026	2	AN 3-14
	PBY-5B	28P5026	2	AN 3-4A
	PBY-5	28P5026	2	AC365-1032
				Q 7102-AL10

C. 70496 ONLY-
C. 70496 & 91876 B

REQUIREMENTS PER AIRPLANE

REPLACES — CALC WT.

REPLACED BY — ACT WT.

LIMIT ON DIMENSIONS UNLESS OTHERWISE SPECIFIED ± 1/32 ± 1/3 — SCALE 12" = 1'-0"

STAMP PART NUMBER WHERE SHOWN

PART NO	STOCK	MATERIAL	SPEC	LH REQ. -0	RH REQ. -2	LH REQ. -3	RH REQ. -4	LH REQ. -5
28P2019-3				2	2			
28P2025								
-10	Y-2-A27RT X 8							
-9	Y-2-A27R X T½							
-8	.064 X 90 X 2 1/8	ALC. 24ST	41A8: TYPE II	2	2			
-7	Y-2-A27RT X 3							

PARTS LIST PER ASSY.

AC			12-11-39	[illegible]
NAVY NONE HEAT TREAT	NOTED FINISH	DRAFT	4/4/39	[illegible]
		CHECK	12/24/39	[illegible]
		STRUCT.	1-2-40	[illegible]
		MAT	1-2-40	[illegible]
		APPROV	1-2-40	[illegible]
		ENG		

NAME SUPPORT INST. - P.P. - STARTER CONTROL CRANK

OPP HAND

CONSOLIDATED AIRCRAFT CORP. SAN DIEGO, CALIF.

DWG. SIZE D

28P5028

E.O. 22775B

LET	ALTERATION	DATE	BY
A	ADDED NOTE	11-9-42	[illegible]
B	REMOVED "A" CHANGE	2-4-43	SINGER
-	CHANGED MATERIAL OF -6, -7 & -8 TO STAINLESS STEEL - WAS ALLALOY - REMOVED RIVETS & ADDED NOTE RE: "FABRICATE ... ½ C-C		
C	ENLARGED CONTROL CABLE HOLE #8: 5/32 DIM. WAS 9/32" CUT THRU AS SHOWN. ADDED PLMS #8 & #9. WT. CHG. NEG.	8-31-42	MORINO
MCR#213 D	CANCELED & REPLACED BY SOLAR #6-356	5-5-43	NICHOLAS
MCR#213A E	REINSTATED 28P5031. WAS CANCELED & REPLACED BY SOLAR #6-356. BROUGHT REQ/AIR		
	BLOCK UP TO DATE NO WT CHG	8-20-43	STEWART

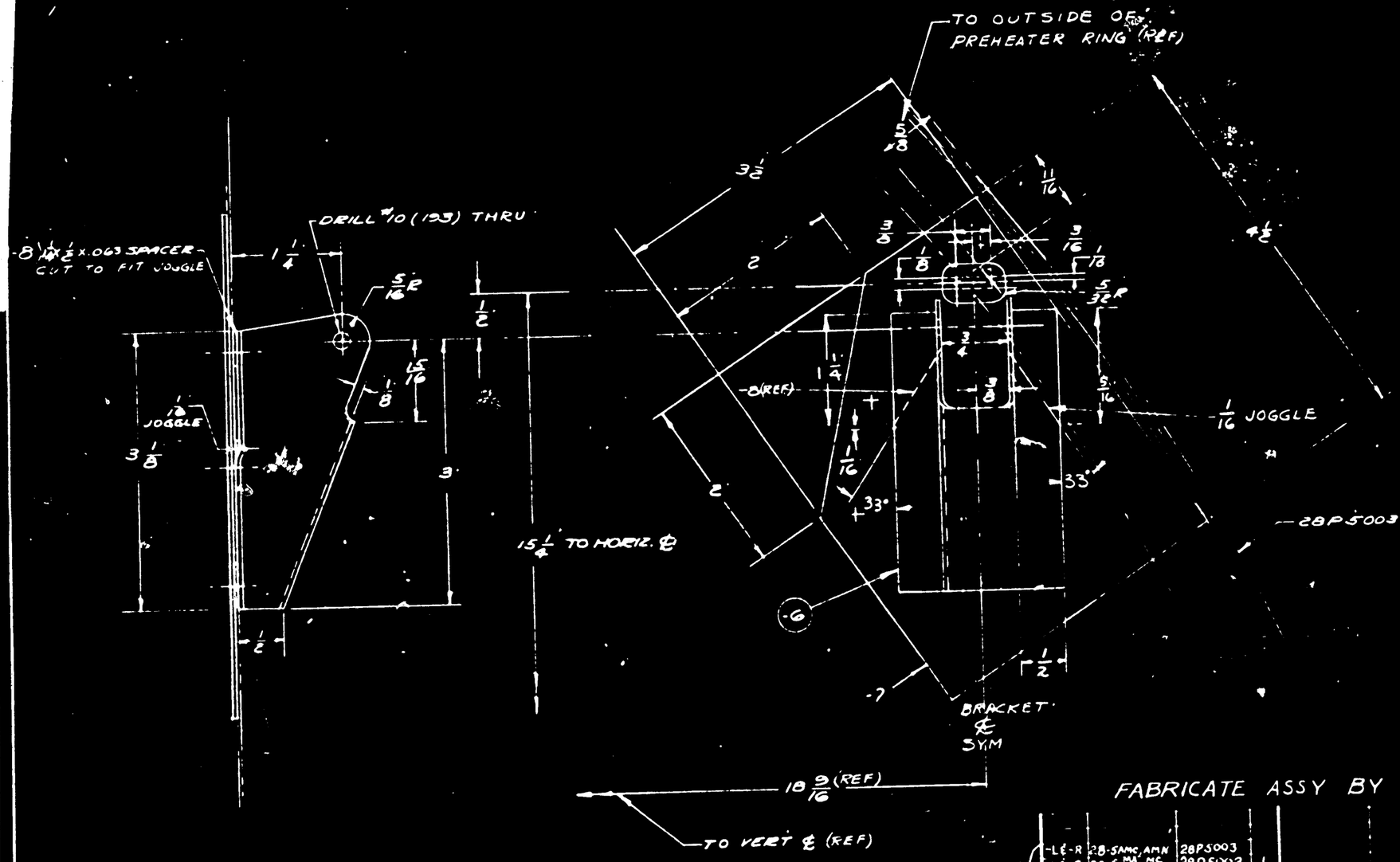

NOTE:- ALL BEND RADII 1/8

FABRICATE ASSY BY SPOTWELDING - 1/2 C-C

AS PER SOLAR DWG #12-274

ASSY DASH NO	MODEL	NEXT ASSY	REQ
-LE-R	28-SAMC, AMN	28P5003	
-LE-R	28-6 MA, MC	28P5003	1
-R	PBY-5A&B	28P5003	1
-L	PBY-5A&B	28P5003	1
R	28-5'S	28P5003	1
L	28-5'S	28P5003	1
R	PBY-5'S	28P5003	1
L	PBY-5'S	28P5003	1

REQUIREMENTS PER AIRPLANE

REPLACES — CALC. WT —

REPLACED BY — ACT. WT ✓

UNLESS OTHERWISE SPECIFIED — SCALE 12"=1'-0"

1/32

STAMP PART NUMBER WHERE SHOWN

ANG 4204

PART NO	STOCK	MATERIAL	SPEC	LH RH REQ -0	LH RH REQ -2	LH RH REQ -3	LH RH REQ -4	LH RH REQ -5
-8	.064 x 1 1/2 x 5"	STAINLESS STL	47-S-19 GRI	1	1			
-7	.091 x 3 1/2 x 4 3/4	STAINLESS STL	47-S-19 GRI	1	1			
28P5031-6	.063 x 3 1/2 x 5"	STAINLESS STL	47-S-19 GRI	1	1			

PARTS LIST PER ASSY

	DRAFT	CHECK	STRUCT	MAT	APPROV	ENG
VVVVan	[illegible]	[illegible]	[illegible]	[illegible]	[illegible]	[illegible]
F Suggs	Suggs	[illegible]	[illegible]	[illegible]	[illegible]	[illegible]
2-23-99	12-23-99	[illegible]	[illegible]	[illegible]	[illegible]	[illegible]

A C — NAVY — HEAT TREAT — FINISH

OPP HAND 28P5031-R

NAME BRACKET INSTALL - PROP CONT. PULLEY - COWL WELL

DWG D 28P5031

CONSOLIDATED AIRCRAFT CORP. 9-IN D 180 CAL F

ENG. FILE

L.H. NAC. INSTALL LOOKING FORWARD R.H. NAC OPPOSITE

10 SEP 82

LET	ALTERATION	DATE	BY
K	REDRAWN	9-24-42	[illegible]
L	CREATED -18 & 17 SUB ASS'Y & -3 & -4 ASS'Y ADD'D PART'S. NOTE TO FACE IN REQ PER AIRPLANE REMOVED & FOR PART'S (R) REQ'SHIPS & REPLACED WITH -3, -4 (O) EACH REQ'SHIP ADDED -18 (O) & -19 (O) NO WT. CHG.	3-26-42	[illegible]
M	442 LBS. WAS 250. REMOVED NOTE- "PROOFLOAD TO BE 250 LBS" NO WT. CHG.	6-10-42	[illegible]
N	REMOVED -12 & -13 SUB ASS'YS FROM -0 ASS'Y.	8-21-42	[illegible]

E.O. A2G962

E.O. A41095

E.O. A55048

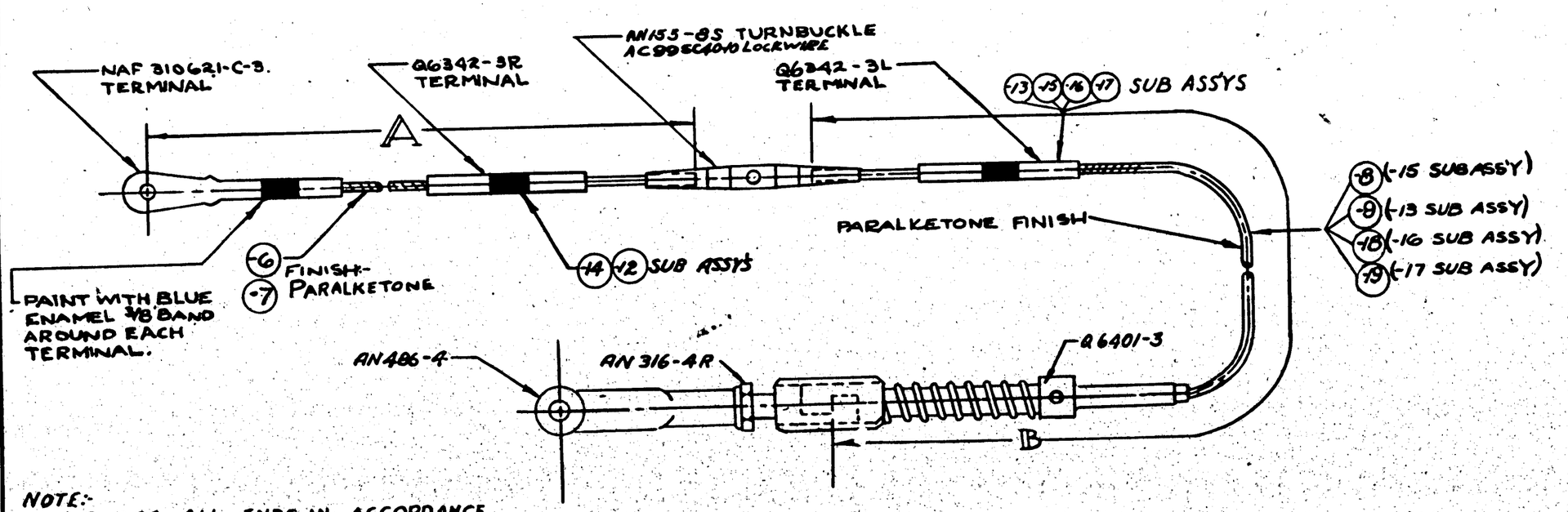

NOTE:-
SWAGE ALL ENDS IN ACCORDANCE WITH SPEC. T-46 SEE Q6342 (REF)

NOTE:-
PRE-STRETCH TO 442 # (M)

PART NO	A	B
28P5046-0	137 1/2	26 1/4
	-6	-8
28P5046-2	141 1/4	62 3/8
	-7	-9

(L)

PART NO	B
28P5046-3	62 1/4
	-18
28P5046-4	-64 3/8
	-19

CONTS. {77713 88476}

CONT. 70496

-0	PBY-5B	28P5005	2	
-2	PBY-5B	28P5005	2	
-4	PBY-3A	28P5005	1	
-5	PBY-3A		1	
-2	28-3AN/MS		2	
-0	20-3AN/MS		2	
-2	20-3MS		2	
-0	28-3MS		2	
-0	PBY-5A		2	
-2	PBY-5A		2	
-2	PBY-5	28P5003	2	
-0	PBY-5	28P5003	2	

ASSY. DASH NO.	MODEL	NEXT ASSY.	REQ.

REQUIREMENTS PER AIRPLANE

REPLACES 28P5046 "B" SIZE — CALC. WT.

REPLACED BY — ACT. WT.

UNLESS OTHERWISE SPECIFIED 1/8 — SCALE 12" = 1'-0"

STAMP PART NUMBER WHERE SHOWN

PART NO.	STOCK	MATERIAL	SPEC.	LN REQ.	RH REQ.	LN REQ.	RH REQ.	LN REQ.	RH REQ.	LN REQ.	RH REQ.	LN REQ.	RH REQ.
				-M	-15	-12	-13	-16	-17				
28P5046-1	5/32 D x 62 1/4		.2266-A						/				
28P5046-3	5/32 D x 64 3/8		.2266-A								/		
NAF 810621-C-3				/	/	/	/	/					
Q6342-3L				/		/	/		/				
Q6342-3R					/			/					
Q6401-3					/	/	/	/	/				
-9	5/32 D x 62 1/4		.2266-A				/						
-8	x 26 1/4				/								
-7	x 137 3/8					/							
-6	5/32 D x 137 3/8		.2266-A	/									
SUB ASSEMBLY													
AN486-4				/	/	/	/	/	/				
AN316-4R				/	/	/	/	/	/				
AN155-8S				/	/	/	/	/	/				
AC995C4040				/	/	/	/	/	/				
-17	SUB ASSEMBLY								/				
-16								/					
-13							/						
-12						/							
-15					/								
-14	SUB ASSEMBLY			/									

PARTS LIST PER ASSY.

AC				ENDERS	JONES		JAM						
NAVY NONE	NOTED			9/25/42	32642								
HEAT TREAT	FINISH			DRAFT	CHECK	STRUCT	MAT		APPROV		ENG.		

NAME CABLE ASSY.- ENGINE CONTROLS - COWL FLAP

OPP. HAND

CONSOLIDATED AIRCRAFT CORP. SAN DIEGO, CALIF.

DWG. SIZE D — 28P5046

R

LET	ALTERATION	DATE	BY

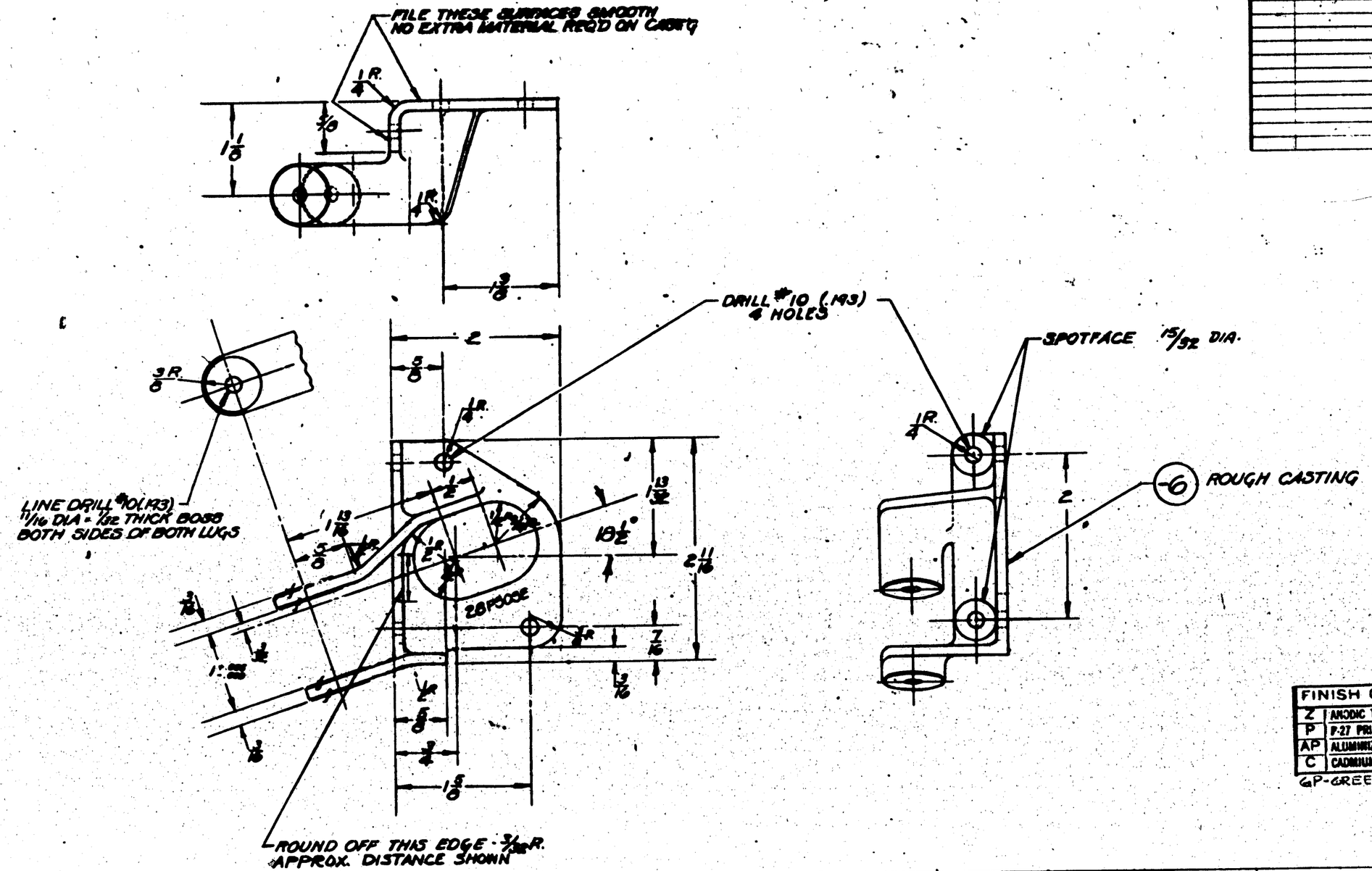

FINISH CODE	
Z	ANODIC TREATMENT
P	P-27 PRIMER
AP	ALUMINIZED PRIMER
C	CADMIUM PLATE

GP-GREEN PRIME

NOTES:-
ALL FILLETS = 1/8 R. UNLESS OTHERWISE SHOWN
ALL WALL THICKNESSES = 1/8
LIMITS ON CASTING = ±1/32 & ±1°
LIMITS ON MACHINING = ±.010 & NOTED

ASSY. SHEET NO.	MODEL	NEXT ASSY.	REQ.
	PBY-5A	28P5026	2
	28-5ME	28P5026	2
	PBY-5	28P5026	2

REQUIREMENTS PER AIRPLANE

REPLACES — CALC. WT.

REPLACED BY — ACT. WT.

± NOTED — SCALE 12"=1'-0"

STAMP PART NUMBER WHERE SHOWN

PART NO.	STOCK	MATERIAL	SPEC.	LH REQ.	RH REQ.	LH REQ.	RH REQ.	LH REQ.	RH REQ.	LH REQ.	RH REQ.	LH REQ.	RH REQ.
-6		AL ALLOY CASTG	46A1-CL4	1									
PARTS LIST PER ASSY.				-0		-2		-3		-4		-5	

AC		MATERIAL APPD.					
NAVY 52-00756	Z-P-AP	5-28-42	7-1-42				
HEAT TREAT	FINISH	DRAFT	CHECK	STRESS	MAT.	APPROV.	ENG.

NAME BRACKET-RIGHT-STARTER RELEASE IDLER — OPP. HAND

CONSOLIDATED AIRCRAFT CORP. San Diego, Calif.

SIZE D — DWG. 28P5052

LET	ALTERATION	DATE	BY
A	28-0-5016-3 MKD. 28-0-5016-4		
B	28-0-5007 MKD 28-0-5007-2 ON DWG. & S/M	6-8-43	
C	28-0-5016-4 MKD 28-0-5016-2	7-21-43	
D	LIMITED ADPTR. ROUTE ON P.A.	9-6-43	
	28P5061 TO MCR 291 # ADDED		
	PBY-5A, N.A. 28P5536 ADDED FOR MCR 291 # ON. NO WT. CHG.		
E	TO PAINT OF DWG. # ON W-ASSY	9-21-43	
	LIMITED 28-0-5016-3 TO MCR 1009-1 # MCR 316-1 # ADDED		
	28-0-5068-3 (2) FOR MCR 1009-1 # MCR 316-1 # ON. NO WT CHG		

E.O.A9679
28-5MA,ME,MC,AMC
E.O. "A" 31916
M.C.R. 291

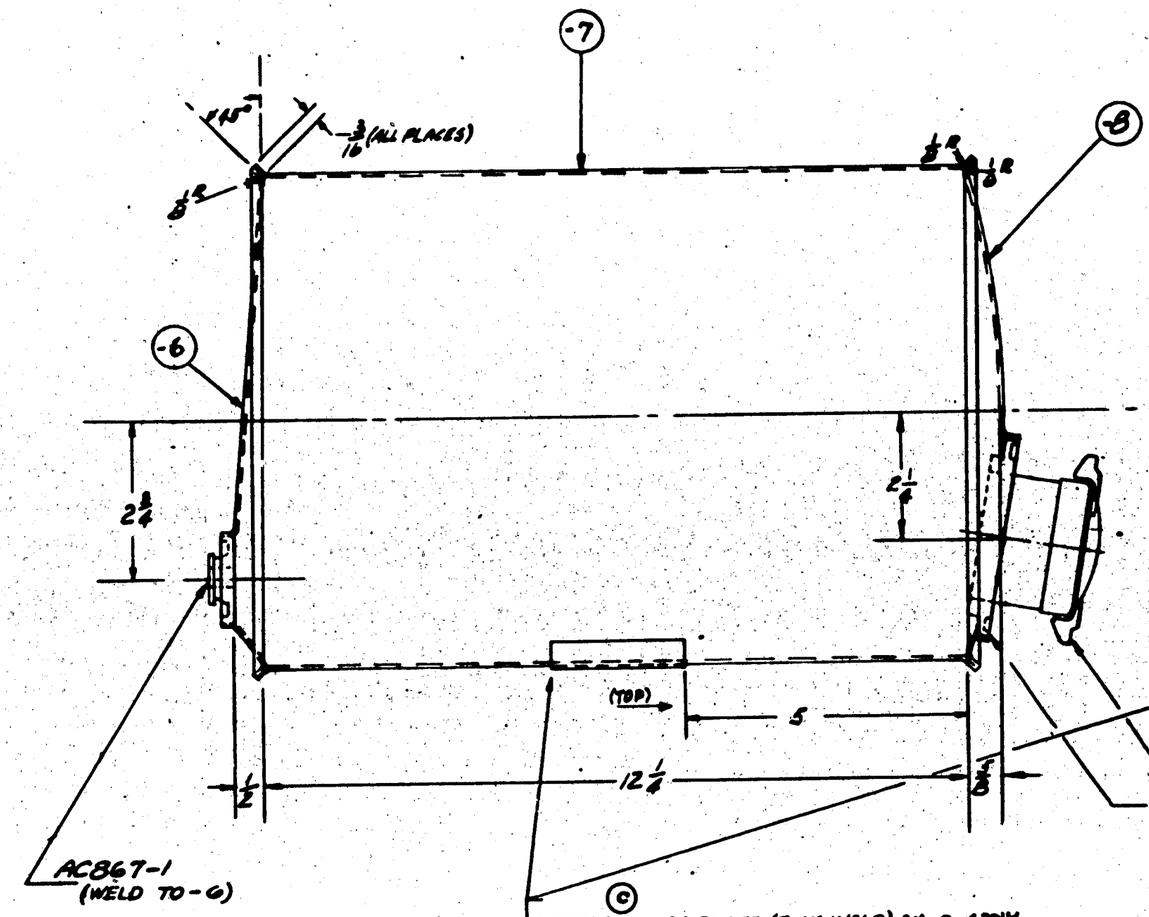

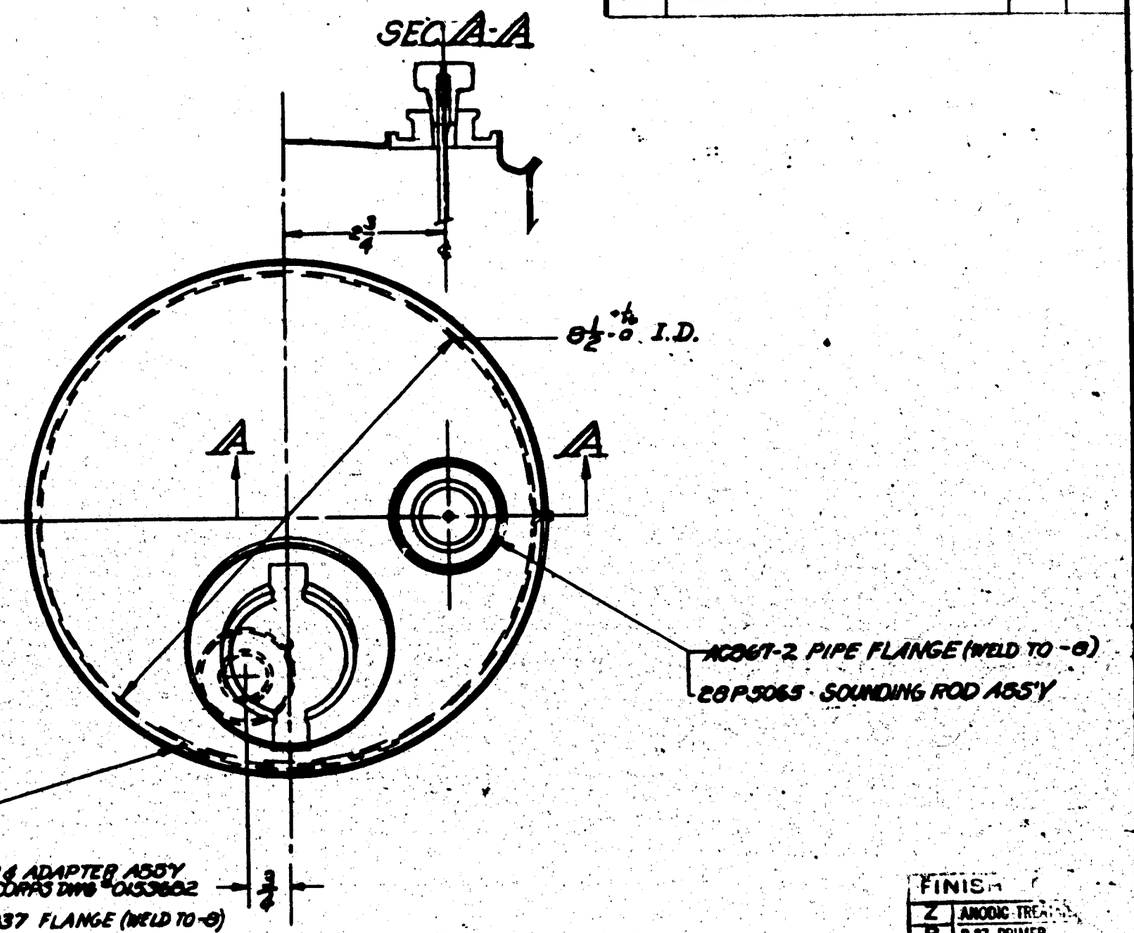

FINISH	
Z	ANODIC TREAT.
P	P-37 PRIMER
AP	ALUMINIZED PRIMER
C	CADMIUM PLATE

ASSY. DASH NO.	MODEL	NEXT ASSY	QUAN.
-0	PBY-5A	28P5536	1
-0	28-5AMN	28P5061	1
-0N	28-5MN	28P5061	1
-0	PBY-5A	28P5061	1
-700	PBY-5B	28P5061	1
-700	28-5AMC	28P5061	1
-700	28-5MA,MC	28P5061	1
-700	28-5ME	28P5061	1
-0	PBY-5	28P5061	1

REQUIREMENTS PER AIRPLANE

REPLACES — 8.95 CALC WT.

REPLACED BY — ASY. WT.

LIGHT ON DRAWING UNLESS OTHERWISE SPECIFIED: 1/32 +

SCALE 6" = 1'-0"

STAMP PART NUMBER WHERE SHOWN

PART No.	STOCK	MATERIAL	SPEC.	LH REQ. -0	RH REQ. -0	LH REQ. -3	RH REQ. -4	LH REQ. -5	RH REQ.
	0153682 AIR CORPS DWG			1	1				
	28-0-5307				1				
	AC867-2			1	1				
	AC867-1			1	1				
	28P5065			1	1				
	28-0-5016-3 TO MCR 1009-1 # MCR 316-1			1	1				
	266037			1					
	28-0-5053-3 MCR 1009-1 # MCR 316-1 # ON			1					
-8	.051 x 12 x 12	ALUM N.H.	47A2	1	1				
-7	.051 x 12 x 27	ALUM N.H.	47A2	1	1				
-6	.051 x 12 x 12	ALUM N.H.	47A2	1	1				

PARTS LIST PER ASSY.

WELD ASSEM.

FINISH- Z INSIDE & OUTSIDE
P-2AP OUTSIDE ONLY.

ALL BEND RADII = 1/8 R.

AC		4-N-43	5-4-43
NAVY NONE	NOTED	DRAFT	CHECK
HEAT TREAT	FINISH	STRUCT	MAT

NAME TANK ASSEM.
SLINGER RING SUPPLY

CONSOLIDATED AIRCRAFT CORP. SAN DIEGO, CALIF.

OPP HAND

DWG SIZE D — 28P5059

6505182

LET	ALTERATION	DATE	BY
A	[redacted]		
B	[redacted]		
	& LIMITED TO [redacted]		
	N.A. 28P5061 TO MCR 291, [redacted]		
	P&Y-5A, N.A. 28P5036 REPTS. [redacted]		
	MCR 291 & ON. NO WT. CHG.		

MCR 291

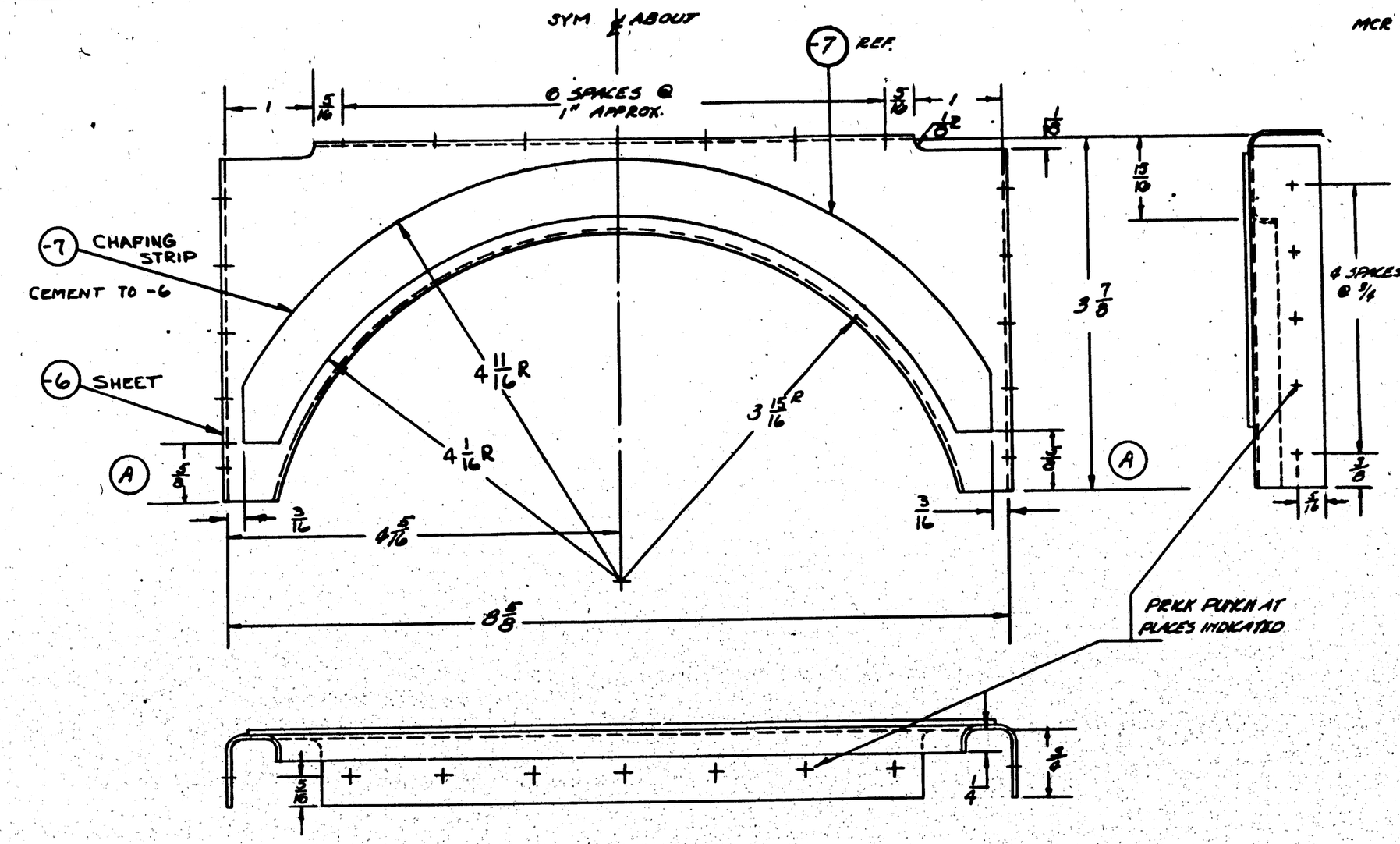

NOTE:-
1. ALL BEND RADII = 1/8
2. FINISH -6 Z-P-ZAP

FINISH	
Z	ANODIC TREATM...
P	P-27 PRIMER
AP	ALUMINIZED PRIMER
C	CADMIUM PLATE

MCR 291 ON
TO MCR 291

ASSY. DASH NO.	MODEL	NEXT ASSY.	REQ.
	28-5AMN	28P5061	1
	28-5AMC	28P5061	1
	28-5MN	28P5061	1
	28-5MC	28P5061	1
	28-5MA	28P5061	1
	P&Y-5A	28P5036	1
	P&Y-5B	28P5061	1
	P&Y-5A	28P5061	1
	28-5MC	28P5061	1
	P&Y-5	28P5061	1

REQUIREMENTS PER AIRPLANE

REPLACES .2 CALC. WT.

REPLACED BY ACT. WT.

LIGHT ON DRAWING UNLESS OTHERWISE SPECIFIED: + 1/2 | SCALE 12"=1'-0"

STAMP PART NUMBER WHERE SHOWN

PART NO.	STOCK	MATERIAL	SPEC.	-0 LH REQ.	-0 RH REQ.	-2 LH REQ.	-2 RH REQ.	-3 LH REQ.	-3 RH REQ.	-4 LH REQ.	-4 RH REQ.	-5 LH REQ.	-5 RH REQ.
-7	.063 x 3/8 x 84"	NEOPRENE	N-11	1									
28P5062-6	05/16 & 5/12	ALCLAD	17AB-A	1									

PARTS LIST PER ASSY.

AC		6-11-40							
NAVY SR-53	NOTED	[redacted]							
HEAT TREAT	FINISH	DRAFT	CHECK	STRUCT.	MAT.	APPROV	ENG

NAME SUPPORT - SLIPPER RING TANK

OPP. HAND

CONSOLIDATED AIRCRAFT CORP. San Diego, Calif.

DWG. SIZE D | 28P5062

Z906 182

LET	ALTERATION	DATE	BY
A	ADDED -2 ASSY, REPLACES -3 IS 28P5063-30 IV -2 ASSY. ASSY REQ FOR -0 ASSY (1) EACH, WAS (2)		
B	-7 (24ST-COND -T) WAS (24ST-COND -A)	11/1/40	
C	CHANGED TO 28P5063-22 WAS 28P5063-20. SHOWN ON THIS PART-2 ASSY	7-15-41	
D	FROM FACE 4 B/M REMOVED AN 315 D4R (NUT)(1). WT CHG. NEG	11-12-42	
E	IN B/M FOR -8L & -8R, REPLACED "K5401 T 3/4, AL. AL. EXT., 4GA9-T" WITH "NOTED." ADDED MAT'L NOTE "1. WT CHG. NEG	8-2-43	
F	LIMITED REQMTS PBY-5A, -0-2, N.A. 28P5061(1) TO M.C.R. 291. ADDED PBY-5A -0-2, N.A. 28P5336(1) M.C.R. 291 & ON. NO WT CHG.		
G	[illegible] WAS AN 4 B.H.A. ADDED NOTE C'S'K. BOTH SIDES NO WT CHG.	9-17-47	

AN442 D4 RIV.

(8L) CUT

FROM PUNCH 9 HOLE LOCATIONS 8 EQUAL SPACES

10

5/16

(8R) CUT

AN442 D4

11/32 (APPROX.)

1/4

4 1/8

28P2083-6 CLIP

Q4303D4

Q4303D4 C'S'K BOTH SIDES

4 3/8 R

(6) CRADLE ASSEM.

28P2083-8 NEOPRENE
28P2083-5 ANGLE
28P2083-7 CLIP
28P2083-12 FILLER

NOTE:- CEMENT 28P2083-8 TO 28P2083-5

(B) (-7) SHEET EDB 2457N

AN 442 D4 RIV.

1/4

3/4

4 15/16

AN 3 DD12 BOLT
AN 310 D3 NUT
AN 38062-2 COT.

28P2083-22 (-2 ASSY)
28P2083-3 (-0 ASSY)
STRAP ASSEM

3/8

AC 365 D 428 NUT
AN 960 D 416 WASHER

(D)

FINISH CC

Z	ANODIC TREATMT.
P	P-27 PRIMER
AP	ALUMINIZED PRIMER
C	CADMIUM PLATE

MATERIAL NOTES-

(E) 1-MAT'L. FOR -8L & -8R MAY BE-
(A.) Y-2-A 28T X 11/16, OR
(B) K 5401 X 11/16, AL. AL. EXTR., SPEC. QQ-A-354-T.

NOTES:-
1-FINISH-7 & 8 LERK-P-2 AR
2-ALL BEND RADII = 1/8 R.

ASSY. DASH NO.	MODEL	NEXT ASSY.	REQ.
-2	PBY-5A	28P5336	1
-0	PBY-5A	28P5336	1

M.C.R. 291 & ON

REQUIREMENTS PER AIRPLANE

TO M.C.R. 291

ASSY. DASH NO.	MODEL	NEXT ASSY.	REQ.
-2	PBY-5A	28P5061	1
-0	PBY-5A	28P5061	1
-2	28-5AMM	28P5061	1
-2	28-5AMC		1
-2	28-5MM		1
-2	28-5MC		1
-2	28-5MA		1
-0	28-5AMM		1
-0	28-5AMC		1
-0	28-5MM		1
-0	28-5MC		1
-0	28-5MA		1
-2	PBY5A	28P5061	1
-0	PBY5A	28P5061	1
-2	28-5ME	28P5061	1
-2	PBY-5	28P5061	1
-0	28-5ME	28P5061	1
-0	PBY-5	28P5061	1

(A)

REQUIREMENTS PER AIRPLANE

REPLACES — CALC. WT. .55
REPLACED BY — ACT. WT.
SCALE 12"=1'-0"
STAMP PART NUMBER WHERE SHOWN

PART NO.	STOCK	MATERIAL	SPEC.	LH REQ. -0	RH REQ. -2	LH REQ. -3	RH REQ. -4	LH REQ. -5	RH REQ. -6	LH REQ. -7	RH REQ. -8
AN442D4										1	1
Q4303D4										2	2
28P2083-12										1	1
28P2083-8										1	1
28P2083-7										1	1
28P2083-6										1	1
-8R	NOTED	NOTED	NOTED								
-8L	NOTED	NOTED	NOTED								
-7	.081 X 5 X 12	ALC 2450	4TA8								
PARTS	ASSEMBLED	ON -6	ASS'Y								
AN960D416				1	1	1	1	1	1		
AN840-C2-2				1	1	1	1	1	1		
AC365D428				1	1	1	1	1	1		
AN310D3				1	1	1	1	1	1		
AN3DD12				1	1	1	1	1	1		
28P2083-3				1							
28P2083-22					1						
28P5063-6						1	1	1	1	1	1

PARTS LIST PER ASSY.

AC		4-11-40	5-10-40
NAVY HOME	NOTED	BRINOT	
HEAT TREAT	FINISH	DRAFT	CHECK / STRUCT. / MAT. / APPROV. / ENG.

OPP. HAND

NAME BRACKET ASSEMBLY SLINGER RING TANK

CONSOLIDATED AIRCRAFT CORP. SAN DIEGO, CALIF.

DWG. D SIZE 28P5063

28P5063

LET	ALTERATION	DATE	BY

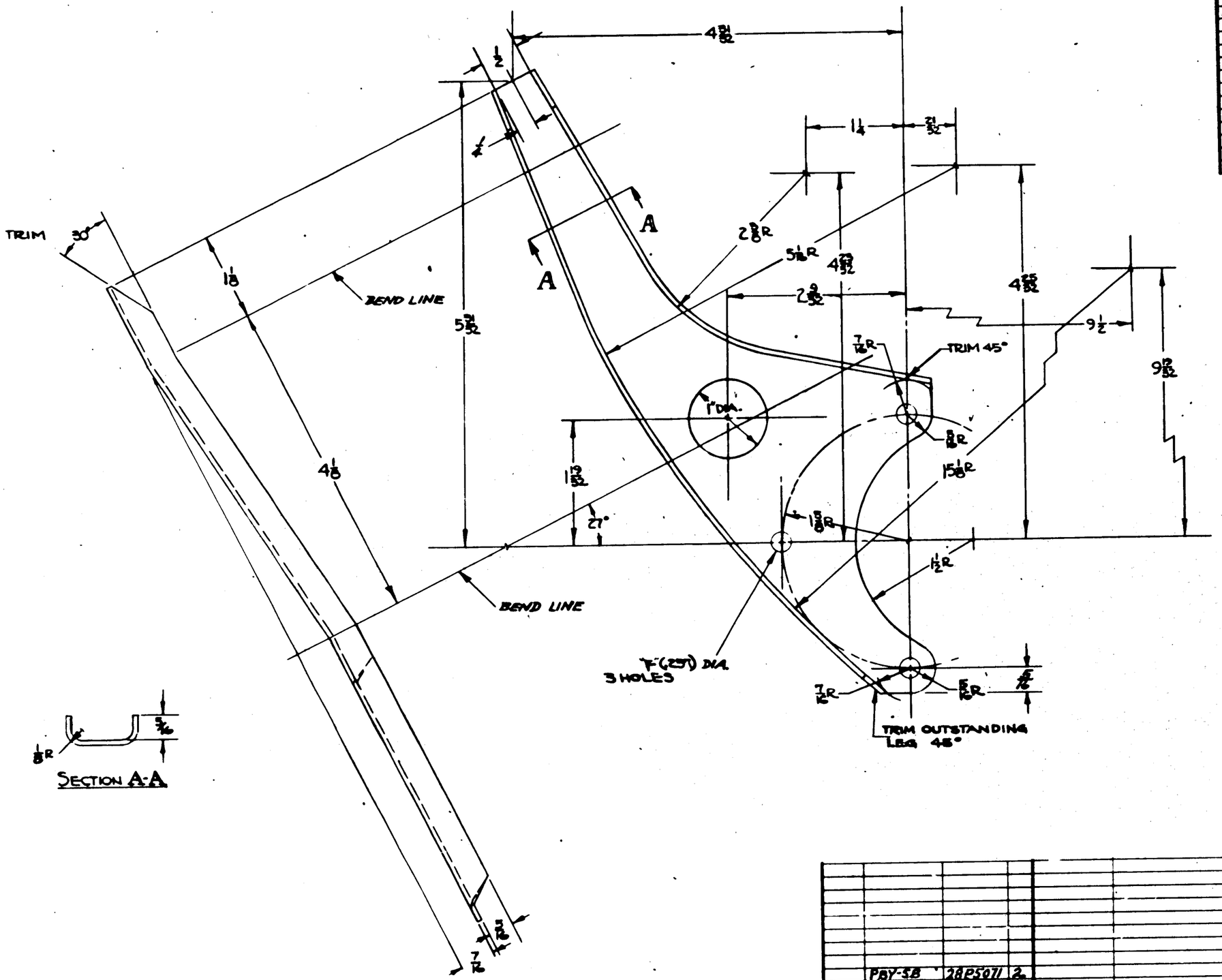

PBY-5B	28P5071	2	
PBY-5	28P5071	2	
ASSY. DWG. NO.	MODEL	NEXT ASSY	REQ.

REQUIREMENTS PER AIRPLANE

REPLACES	.102 CALC. WT.
REPLACED BY	ASS'Y. WT.
LIMIT OF ENGINEERING RELEASE APPROVED DISPOSITION + 1/32	SCALE 12"=1'-0"

STAMP PART NUMBER WHERE SHOWN

PART NO.	STOCK	MATERIAL	SPEC.	LH REQ.	RH REQ.	LH REQ.	RH REQ.	LH REQ.	RH REQ.	LH REQ.	RH REQ.
	.063 X 4 1/2 X 0 1/4	C.R. STEEL	4130								
PARTS LIST PER ASSY.				-0		-2		-3		-4	-5

AC		6-19-40	[illegible]					
NAVY None	None	REGISTER 6-27-40				3		
HEAT TREAT	FINISH	DRAFT	CHECK	STRUCT.	MAT	4-21-42 APPROV.	ENG.	

OPP. HAND None

NAME SUPPORT-
STARTER UNIVERSAL BEARING REAR

CONSOLIDATED AIRCRAFT CORP. SAN DIEGO, CALIF.

SIZE D

DWG. 28P5069

LET	ALTERATION	DATE	BY
A	REVISED M.T. NOTE: NAF. SN21 1 125,000 PSI.	7-N-40	BALLOU
B	ADDED 1/8 MIN. DIM.- SPOTFACE WAS 5/8 DIA.- SPOT FACE WAS SHOWN WITH DOTTED LINE.	11-18-40	
C	ADDED B IB - .080 WAS 1/8	1-13-41	C.L.S.
D	MAT. X4130 WAS 4130 SPEC. AN-QQ-S-685 WAS 95,000 PSI NO WT. CHG.	7-7-42	Fisher Body
E	21/64 DIM. WAS 11/64. NO WT. CHG.	8-7-42	Bain

E.O. 30046

E.O. 30046 A PUT 5 FORG. NOT APP.

E.O.A 49783

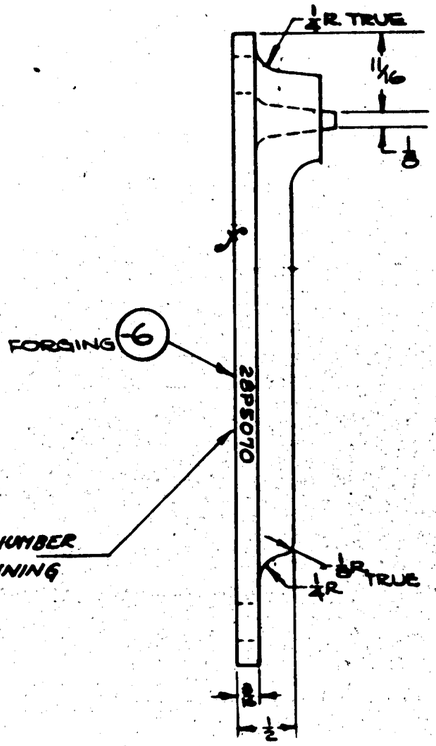

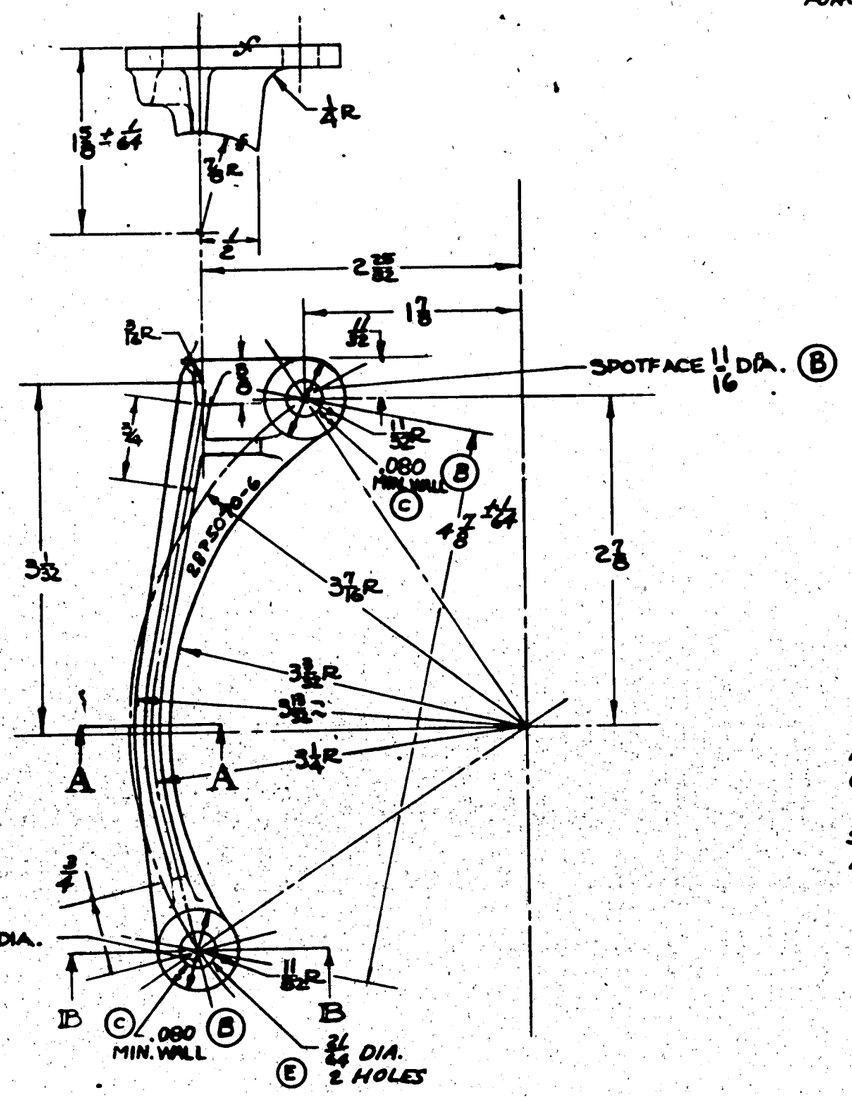

PART MAY BE MADE FROM C.M. STEEL SPEC 475M UNTIL FORGINGS ARE AVAILABLE

SPEC: X4130 EXCEPT MATERIAL TO BE IN ACCORDANCE WITH SPEC AN-QQ-S-684. (D)

ALL DRAFT ANGLES 7° FOR FORGING.
HEAT TREAT -
28PS070-6 FORGING - ANNEAL. (A)

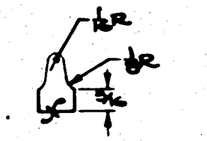

SECTION A-A

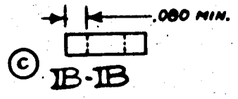

ASSY DASH No.	MODEL	NEXT ASSY	QTY
	28-5AMC	28P5071	2
	28-5MN		2
	28-5ME		2
	28-5MC		2
	28-5MA		2
	28-5AMN	28P5071	4
	PBY-5B	28P5071	4
	PBY-5A	28P5071	4
	PBY-5	28P5071	2

33 SHIPS

REQUIREMENTS PER AIRPLANE

REPLACES — CALC. WT.

REPLACED BY — ACT. WT.

LIMIT ON DIMENSIONS UNLESS OTHERWISE SPECIFIED ± 1/32 — SCALE 12"=1'-0"

STAMP PART NUMBER WHERE SHOWN

PART No.	STOCK	MATERIAL	SPEC.	LH REQ.	RH REQ.	LH REQ.	RH REQ.	LH REQ.	RH REQ.	LH REQ.	RH REQ.
28P5070-6	FORGING	C.M. STEEL	NOTED.								
PARTS LIST PER ASSY.				-0		-2		-3		-4	

AC			4-19-40				
NAVY NOTED	NONE	RELEASED					
HEAT TREAT	FINISH	DRAFT	CHECK	STRUCT.	MAT	APPROV.	ENG.

OPP. HAND NONE

NAME SUPPORT
STARTER UNIVERSAL BEARING FRONT

CONSOLIDATED AIRCRAFT CORP. San Diego, Calif.

SIZE D — 28P5070

LET	ALTERATION	DATE	
	E.O. 28752		
A	ADDED -8 CLIP		
B	5.031 DIM. WAS 5 1/32		
	ADDED: 1.207; 2.540; 4.175; 4.338; 4.712; 4.874; 6.131; 8.131 DIMS		
	REMOVED 3 3/4 DIM		
	E.O. A23056		
C	REMOVED 1/4, 3 7/16 R (TWO) & 4 9/32		
	DIMS. ADDED 3/8 R ± 1/16 & 4 19/32		
	DIM. WAS 4 9/16 NO WT. CHG		
	MCR 263		
D	ADDED F281 (#05) HOLE SEE 3/16		
	DIM. TO -7 LIMITED NO. F. 1505		
	DILITE BEARING TO MCR 263		
	CHGD 'D' OF -7 FROM 1.500 +.001 -.000 TO 1.503 +.001 -.000 NO WT. CHG.		

WELD AS SHOWN

"F-1505 ONLITE" FLANGED BEARING (MCR 263) - PRESS INTO -7-

1.503 ± .005 DIA. AFTER HT & PLATING

28P5070

DRILL #10 (.193) 1 HOLE

HELD TO 28P5068

28P5068

-6 SUB ASSY. WELD. NORMALIZE FINISH C-P

3/8 R ± 1/16

2 15/16 ± 1/64 HOLD

SHIPS "1 THRU "33

5.031 1.207 4 19/32 4.338 5 3/16 4.874 4.712 6.495 8.131 6 7/32 7/16 3/8 5/8 2.540 4.175

DETAIL -7

#28 (.1405) HOLE (2 PLACES).

3/4 DIA. 3/16 1 1/8

SEE NOTE ABOVE

DETAIL -8

MATL .049 × 1 1/16 × 1 3/4 C.M. STL SHEET

FINISH CODE	
Z	ANODIC TREATMENT
P	P-27 PRIMER
AP	ALUMINIZED PRIMER
C	CADMIUM PLATE

GP- GREEN PRIME

ASSY. DASH NO.	MODEL	NEXT ASSY.	REQ'D
28-SHAKEPROOF	28P5026	28P5071	2
28-SHAKEPROOF	28P5026	28P5071	2
28-SHAKEPROOF	28P5026	28P5071	1
PBY-5A			2
PBY-5A			2
PBY-5	28P5026		2

REQUIREMENTS PER AIRPLANE

REPLACES — GALS. WT.

REPLACED BY — ASSY. WT.

SCALE 12" = 1'-0"

STAMP PART NUMBER WHERE SHOWN

PARTS LIST PER ASSY.	PART No.	STOCK	MATERIAL	SPEC.	LH REQ. -0	RH REQ. -2	LH REQ. -3	RH REQ. -4	LH REQ. -5	RH REQ.
	28P5071-8	.040 × 1 3/8 A 1/4	2 PL. STL SHEET	AN-QQ-S-685	1					
	28P5070				1					
	28P5068A				1					
	28P5071-7	1/4 OD × .150 × 1 1/4	C.M. TUBE	44T18	1					
	-6 SUB-ASSY.				1					

#F-1505 DILITE BRG. (TO MCR 263)
28P5071 - SUB-ASSY

AC

NAVY NOTED — NOTED + 2 GP. P — HEAT TREAT — FINISH

DRAFT — CHECK — STRUCT. — MAT. — APPROV. — ENG.

NAME BEARING ASSEMBLY STARTER UNIVERSAL

CONSOLIDATED AIRCRAFT CORP. SAN DIEGO, CALIF.

OPP. HAND NONE

DWG. SIZE D

28P5071

LET	ALTERATION	DATE	BY
-A	23 27/32R WAS 23 3/4R / 15/32 DIM WAS 1/8 NO WT. CHG	6-26-42	EMTEES
B	23 3/4 WAS 23 27/32. RELOCATED 15/32 DIM. NO WT. CHG.	11-12-42	MOE
C	IN NEXT ASSY BLOCK ON FACE OF DWG. 28P5100 WAS 28P5003 NO WT. CHG.	6-10-43	WORKLAS

E.O. A51111

MCR 2413

WELD TUBES IN PLACE AS SHOWN.

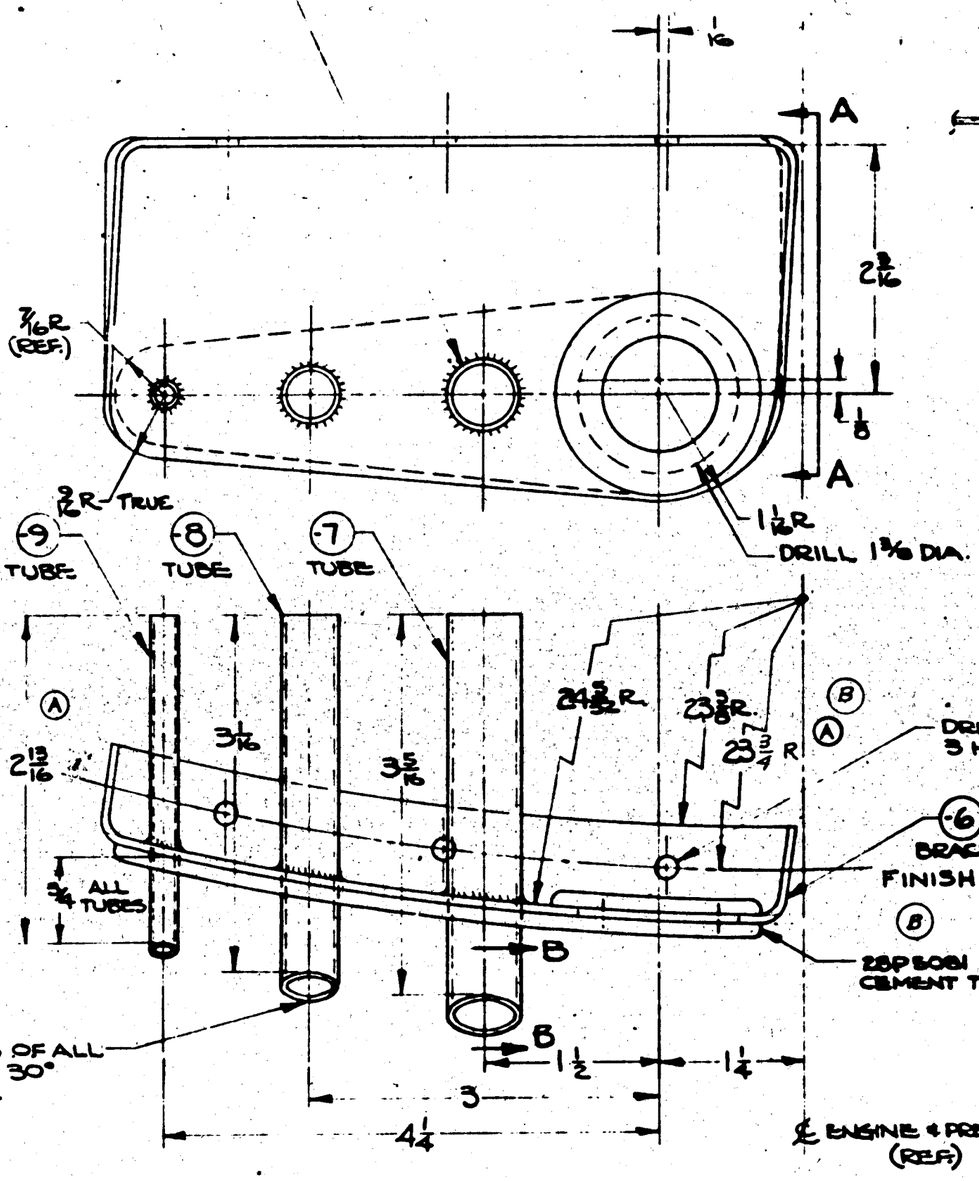

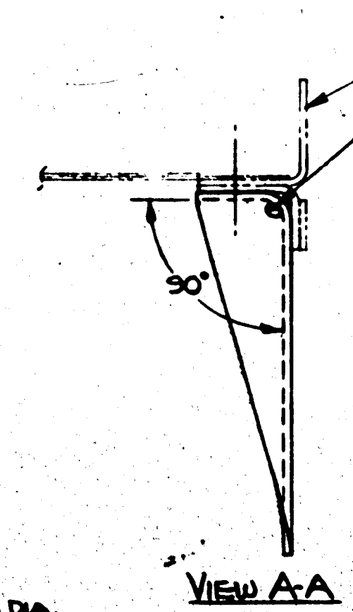

VIEW A-A

ALL BEND RADII 5/16"
DRAFT ANGLES 5° EXCEPT AS NOTED

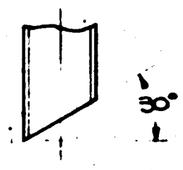

SECTION B-B

FINISH

Z	ANODIC TREAT
P	P-27 PRIMER
AP	ALUMINIZED PRIMER
C	CADMIUM PLATE

THIS PART DESIGNED FOR DROPHAMMER
PARTS MADE FOR FIRST 2 SHIPS

	28-5AMN	28P5100	2
	P6Y5B	28P5100	2
	28-5AMC	28P5100	2
	28-5MN	28P5100	2
	28-5ME	28P5100	2
	28-5MC	28P5100	2
	28-5MA	28P5100	2
	P6Y6A	28P5100	2
	P6Y-5	28P5100	2

ASSY. DASH No. | MODEL | NEXT ASSY. | REQ.

REQUIREMENTS PER AIRPLANE

REPLACES | CALC. WT.

REPLACED BY | ASY. WT.

UNLESS OTHERWISE SPECIFIED ± 1/32 & 1/2° | SCALE 12"=1'-0"

STAMP PART NUMBER WHERE SHOWN

PART No.	STOCK	MATERIAL	SPEC.	LH REQ.	RH REQ.	LH REQ.	RH REQ.	LH REQ.	RH REQ.	LH REQ.	RH REQ.	LH REQ.	RH REQ.
PARTS LIST PER ASSY.				-0		-2		-3		-4		-5	
28P5080-1	.064 - B X 1/2	AL. ALLOY SHT. 4711 - "A"											
-5	1/4 OD x .042 x 5 1/2	AL. ALLOY TUBE 44T52 "A"											
-6	1/2 OD x .042 x 4	"	"										
-7	1/4 OD x .042 x 4	"	"										
28P5081													

AC		7-20-42	7-30-42			
NAVY NONE	NOTED					
HEAT TREAT	FINISH	DRAFT	CHECK	STRUCT.	MAT	APPROV.	ENG.

NAME BRACKET ASSY-P.P.-ENGINE DRAIN & BREATHER TUBES

OPP. HAND None

CONSOLIDATED AIRCRAFT CORP. SAN DIEGO, CALIF.

DWG. SIZE D

28P5080

LET	ALTERATION	DATE	BY
A	CANCELED & REPLACED BY SOLAR #3-679	5-3-43	NICHOLAS
B	REINSTATED 28P5086. WAS CANCELED & REPLACED BY SOLAR # 3-679. BROUGHT REQ/AIR BLOCK UP TO DATE NO WT. CHG	8-20-43	STEWART

MCR #213

MCR #213A

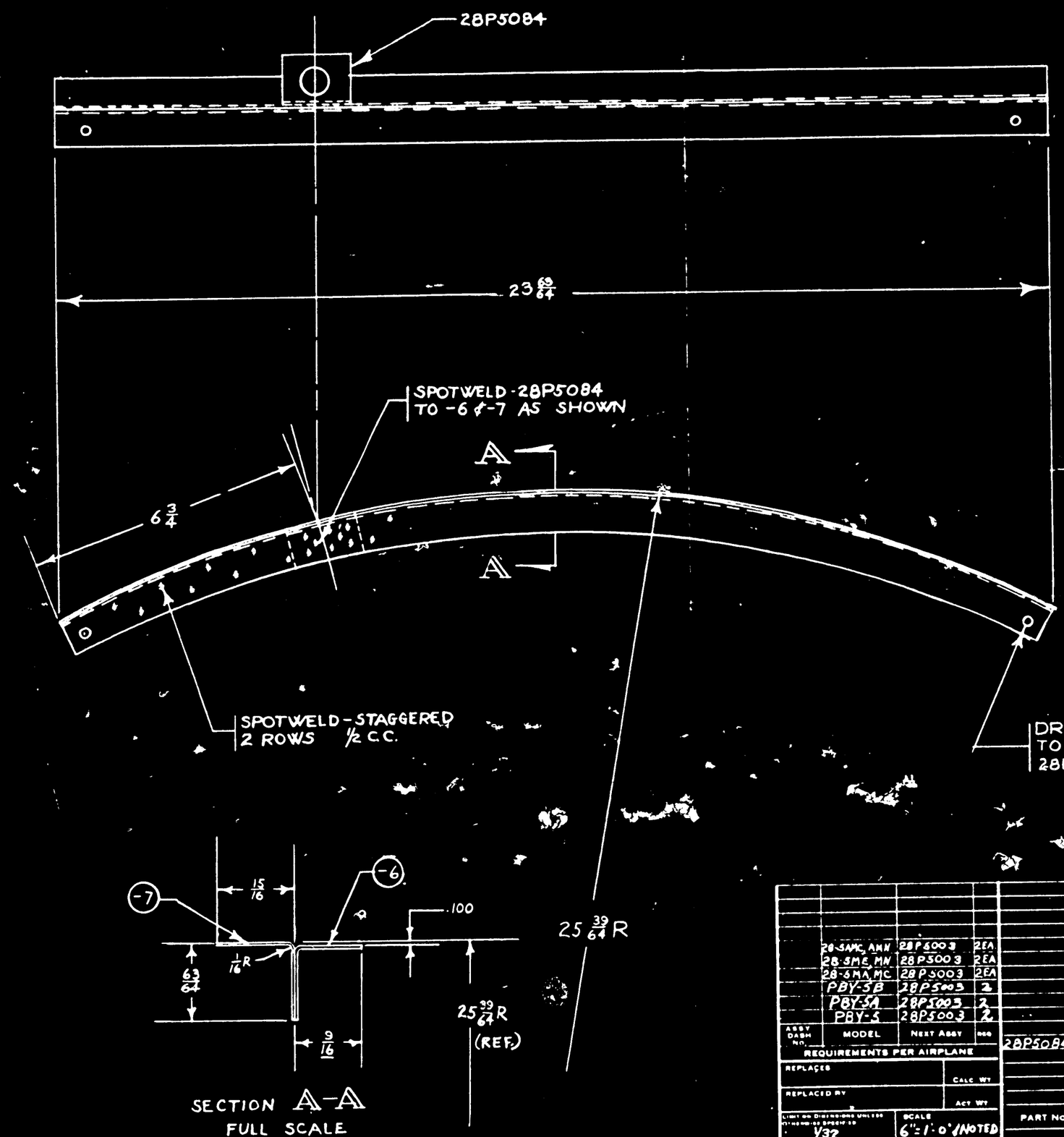

SECTION A-A
FULL SCALE

ASSY DASH NO.	MODEL	NEXT ASSY	REQ
28-SMC, ANN	28P5003		2EA
28-SME, MN	28P5003		2EA
28-6MA, MC	28P5003		2EA
PBY-5B	28P5003		2
PBY-5A	28P5003		2
PBY-5	28P5003		2

REQUIREMENTS PER AIRPLANE

REPLACES — CALC. WT

REPLACED BY — ACT. WT

LIMIT ON DIMENSIONS UNLESS OTHERWISE SPECIFIED: 1/32

SCALE: 6"=1'-0" UNLESS NOTED

STAMP PART NUMBER WHERE SHOWN

28P5084

PART NO	STOCK	MATERIAL	SPEC	LH REQ -0	RH REQ -2	LH REQ -3	RH REQ -4	LH REQ -5	RH REQ
-7	.031 X 1 1/2 X 25 1/2	STAINLESS ST'L	41-S-19-GA1-ST	1					
-6	.031 X 2 1/8 X 25 1/2	STAINLESS ST'L	47-S-19-GA1-ST		1				

PARTS LIST PER ASSY.

A.C.			12-10-40	Hallowell	Green				Bill
NAVY			CHECKED						
HEAT TREAT	FINISH		DRAFT	CHECK	STRUCT.	MAT	APPROV	ENG	

OPP. HAND

NAME FORMER ASSEM-ANGLE COWL WELL

CONSOLIDATED AIRCRAFT CORP. SAN DIEGO, CALIF.

SIZE D | 28P5086

ENG. FILE

28P5086

K

LET	ALTERATION	DATE	BY
A	CANCELED & REPLACED BY SOLAR #3-681	5-3-43	NKMILAS
B	REINSTATED 28P5088 WAS CANCELED & REPLACED BY SOLAR #3 681. BROUGHT REQ/AIR BLOCK UP TO DATE. NO WT CHG	8-20-43	STEWART

MCR #213

MCR #213-A

(-7R) (REF)

(-6R) (REF)

DRILL 7/32 TO MATCH SUPPORT ASS'Y - 28P5072 2 HOLES

13 53/64

3/16 — 4 11/16 — "A" — 3/16

A

B

15/32

1/16

1/8

23 53/64 R

13 1/2°

RADIAL

RADIAL

9/16 — 15/16 — 63/64 — 100

SPOT WELD - STAGGERED 2 ROWS - 1/2 C-C

DRILL 7/32 HOLE TO MATCH CLOSING PLATE ASS'Y 28P5097

	'A' LENGTH
-R	4 13/16
-L	4 5/8

NOTE:
R.H. PART SHOWN
L.H. PART OPPOSITE

(-6R) (-6L) (-7R) (-7L)

.018

3° 25'

6 3/64 — 15/16 — 9/16

23 53/64 R (REF.)

SECTION A-A
FULL SCALE

15/16 — 100 — 3° 20'

1/16 R

63/64

9/16

23 53/64 R (REF.)

SECTION B-B
FULL SCALE

-R	28-SAMC AMN	28P5088		2 EA.
-L	28-SAMC AMN	28P5144		2 EA.
-R	28-S MC AMN	28P5098		2 EA.
-L	28-S MC AMN	28P5144		2 EA.
-R	PBY-5A 1B	28P5098		2 EA.
-L	PBY-5A 1B	28P5144		2 EA.
-L	PBY-5	28P5144		2
-R	PBY-5	28P5098		2
ASSY DASH NO.	MODEL	NEXT ASSY		REQ

REQUIREMENTS PER AIRPLANE

REPLACES

REPLACED BY

CALC. WT

ACT. WT

UNLESS OTHERWISE SPECIFIED 1/32

SCALE 6"=1'-0" NOTED

STAMP PART NUMBER WHERE SHOWN

PART NO	STOCK	MATERIAL	SPEC	LH REQ -0	RH REQ -2	LH REQ -3	RH REQ -4	LH REQ -5	RH REQ
-7R	.031 x 1 1/2 x 14 1/2	STAINLESS ST'L	47-5-19-GR.321						
-7L	.031 x 1 1/2 x 14 1/2	STAINLESS ST'L	47-5-19-GR.321						
-6R	.031 x 2 1/8 x 14 1/2	STAINLESS ST'L	47-5-19-GR.321						
-6L	.031 x 2 1/8 x 14 1/2	STAINLESS ST'L	47-5-19-GR.321						

PARTS LIST PER ASSY.

A.C.

NAVY

HEAT TREAT

FINISH

DRAFT | CHECK | STRUCT | MAT | APPROV | ENG

NAME FORMER ASSEM-ANGLE COWL WELL

OPP HAND 28P5088-L.

DWG SIZE D

28P5088

CONSOLIDATED AIRCRAFT CORP. SAN DIEGO, CALIF.

28P5088

LET	ALTERATION	DATE	BY
A	7/32 DIA HOLE (6) WAS 13/64 Ø		
	DIM (E) (F) 79-HA24-(2) WAS "/16		
	ADD E.L. 79-HA1-02 (4) & 79-HA24-02 (2)		
	02(1) 7/8 x 1 3/16 x 1 1/2 WAS 03(1) 1 3/4 x 1 3/4 x 1 1/2		
	02(5) NEW PART CHG	6-27-42	ROSS
B	REPLACED -7(1) WITH 9(1) 79-HA1		
	02(5) WAS (4) REM'D ANGLE 10-32		
	12 & 79-HA1T-02(1) NES WT CHG	6-27-42	ROSS
C	ADDED DIMS 13 7/8 ; 10 7/8 & 7 7/8		
	NOTE. 7/32 DIA HOLE - 3 PLACES WAS.		
	7/32 DIA HOLES - 3 PLACES TO MATCH		
	28P5144 NO WT CHG	11/43	WINTER
D	IN B/M FOR FACE REMOVED 79-HA1	3-25-43	WALLACE
	02(3) & LOCATING DIMS WT CHNG		
E	CANCELED & REPLACED BY	5-3-43	NICHOLS
	SOLAR #3-688		
F	REINSTATED 28P5092, WAS	6-23-43	BENNER
	CANCELED & REPLACED BY		
	SOLAR DWG #3688 NO WT CHG		

E.O. A62250

E.O. A92060
CAC. 23-10

E.O. B3404

MCR #213

MCR 213A

79-HA1-02 STOP NUT (2) (D)

(B)

8 1/8

3 5/8

5/8

1 3/4

1/4

1/4

13/16

16 9/32

7/32 DIA HOLE - 3 PLACES

TACKWELD

(A)

A

.031 JOGGLE

1/16 R

1/32

3/4

A

9/32

1/32 +.000 -.010

SPOTWELD - 1/2 CC. STAGGERED

(B)

-9

1 1/8

7/8

-8 CEMENT IN PLACE

11/16

5/8

79-HA24-02 HI TEMP STOP NUT (1 ONLY) ON END.

1/4

1/16 R

-6

(A)

SECTION A-A
SCALE: 2 1/2" = 1'-0"

ASSY DASH NO.	MODEL	NEXT ASSY	QTY
	28SMC	28P5144	2
	28-5AMM	28P5144	2
	28-5AMC		2
	28-5MN		2
	28-5ME		2
	28-5MA		2
	PBY-5B		2
	PBY-5A		2
	PBY-5	28P5144	2

REQUIREMENTS PER AIRPLANE

REPLACED

REPLACED BY

CALC WT.

ACT WT.

SCALE: FULL & NOTED

STAMP PART NUMBER WHERE SHOWN

PART NO	STOCK	MATERIAL	SPEC	LH	RH	LH	RH	LH	RH	LH	RH	LH	RH
				REQ	REQ	REQ	REQ	REQ	REQ	REQ	REQ	REQ	REQ
				-0	-2	-3	-4	-5					
79-HA1-02	HI-TEMP STOP NUT			2									
79-HA24-02	HI TEMP STOP NUT				2								
-8	9/32 x 5/8 x 1/32	NEOPRENE		1									
-9	.09 x 1 x 7/8 x 1/32	ST. STEEL	425/DGR 1/2 H	1									
-6	.09 x 1 3/4 x 1 1/2	ST. STEEL	425/DGR 1/2 H		1								

PARTS LIST PER ASSY.

A.C.

NAVY

HEAT TREAT

FINISH

DRAFT | CHECK | STRUCT | MAT | APPROV | ENG.

NAME ANGLE ... SEM. COWL WALL

OPP HAND

SIZE D

DWG NO. 28P5094

CONSOLIDATED AIRCRAFT CORP. ... DIV.

ENG. FILE

28P5094

B

C CAC #A5 50(N) WAS AC366-032.
(3) REMOVED DIM 3 3/8 ADDED NOTE

C CAC NUMBER 50(6)

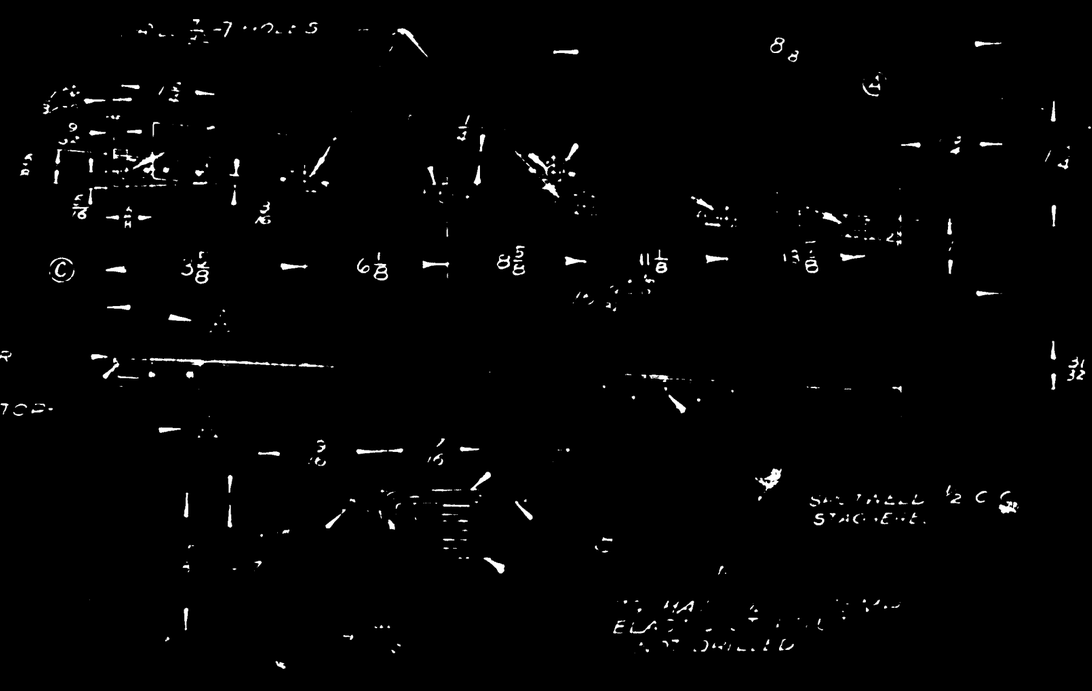

(B) NOTES
(1) ELASTIC STOP NUT PLATE NO 2 MA (2 MAY BE USED AS ALTERNATE FOR 7 MA-02 CAC NU45 50

(C) (2) CAC NU45 50 MAY BE PURCHASED FROM ELASTIC STOP NUT CORP BEVERLY HILLS, CALIF VENDORS NO 79-H A1 02 OR EQUIV

	28P509A	2
2B-SMA	28P509B	2
	28P509A	2
2B-SMA	28P509B	2
	28P509A	2
2B-SMA	28P509B	2
	28P509A	2
PBY-5	28P509B	2

REQUIREMENTS PER A/PLANE

STAMP PART NUMBER WHERE SHOWN

PARTS LIST PER ASSY

ITEM NO.	STOCK	MATERIAL	SPEC	-0 REQ	-2 REQ	-3 REQ	-4 REQ	5 REQ

ENG. FILE

NAME ANGLE ASSEM

CONSOLIDATED AIRCRAFT CORP SAN DIEGO

D 28

LET	ALTERATION	DATE	BY
A	ON -0 ½ ASS'Y 3 CAC NU317 TIN-NERMAN #6199-10Z(T) WAS #79A3H-02(T). ON -2 ½ ASS'Y. CAC NU317 TINNERMAN #6199-10E(T) WAS #79A3H-02(T) (WT. CHG. NEG.)	8-29-42	STRODE
B	CANCELED & REPLACED BY SOLAR #3-678	6-3-43	NICHOLAS
C	REINSTATED 28P5097, WAS CANCELLED & REPLACED BY SOLAR #3-678. BROUGHT REQ/AIR UP TO DATE. NO WT CHG	8-20-43	STEWART

MCR #813

MCR #213A

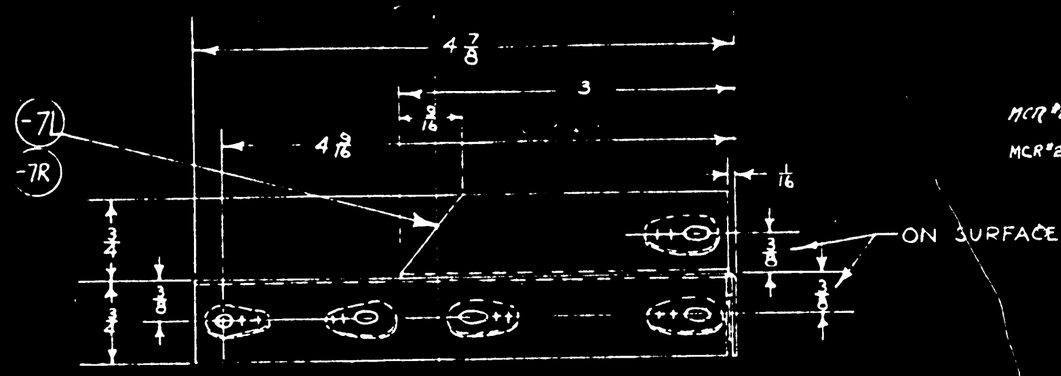

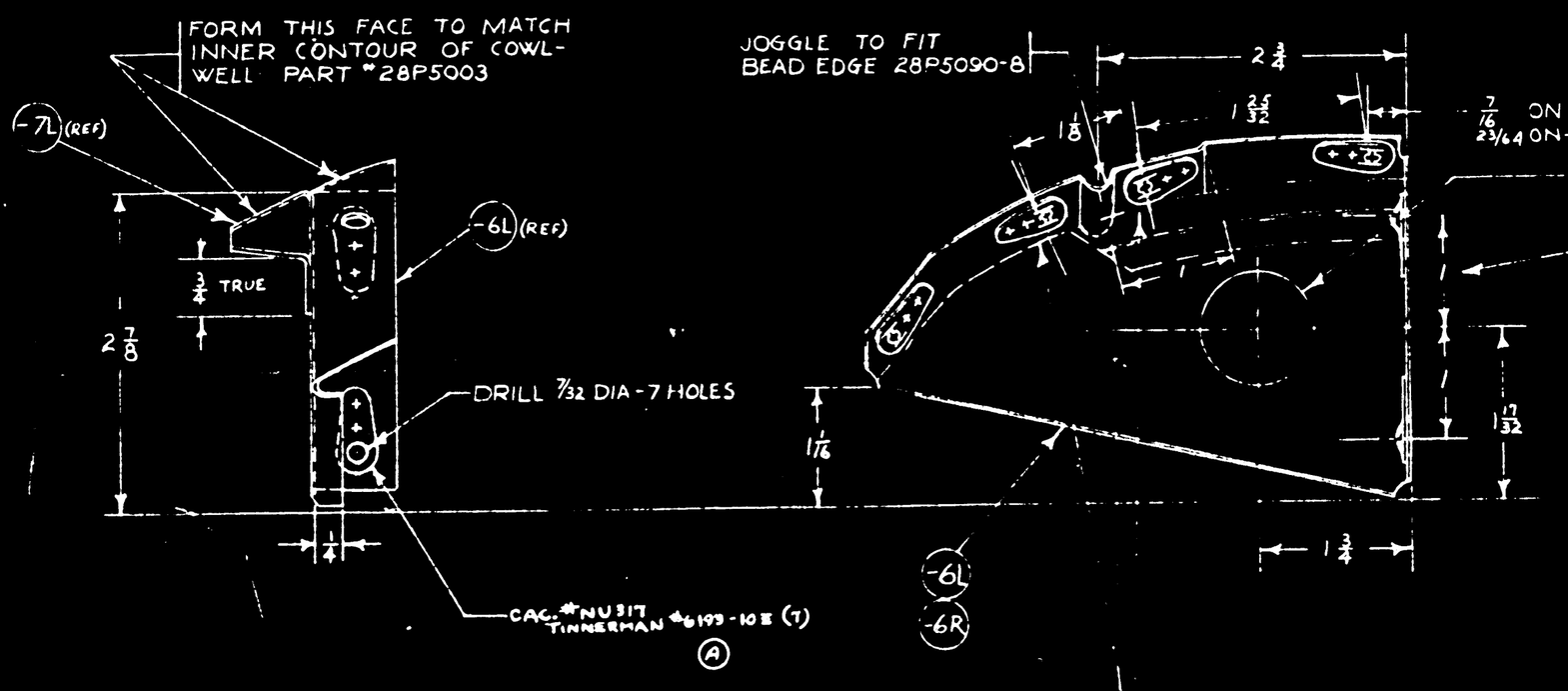

ASSY DASH NO.	MODEL	NEXT ASSY	REQ
-2L & -2R	28-5	28P5003	2EA
-L & R	28-5	28P5003	2EA
-2L & -2R	28-5AMN	28P5003	2EA
-L & R	28-5AMN	28P5003	2EA
-2L & -2R	PBY5, 5A, 5B	28P5003	2EA
-L & R	PBY5, 5A, 5B	28P5003	2EA

REQUIREMENTS PER AIRPLANE

REPLACES

REPLACED BY

.164 CALC WT

ACT WT

SCALE 12"=1'-0"

1/32

STAMP PART NUMBER WHERE SHOWN

CAC# NU317 (TINNERMAN #6199-10Z STAINLESS SPEED NUT) 7 7 5 5

PART NO	STOCK	MATERIAL	SPEC.	LH REQ.	RH REQ.	LH REQ.	RH REQ.	LH REQ.	RH REQ.	LH REQ.	RH REQ.	LH REQ.	RH REQ.
-7L	.031X1 5/8X3	STAINLESS ST'L	47-S-19-GR1-ST	1									
-7R	.031X1 3/4X3	STAINLESS ST'L	47-S-19-GR1-ST		1								
-6L	.031X [illegible] X5 3/4	STAINLESS ST'L	47-S-19-GR1-ST			1							
-6R	.031X [illegible] X5 3/4	STAINLESS ST'L	47-S-19-GR1-ST				1						

PARTS LIST PER ASSY.

AC		SINGER							
NAVY		12-16-40							
HEAT TREAT	FINISH	DRAFT	CHECK	STRUCT	MAT	APPROV	ENG		

OPP. HAND 28P5097-R

NAME PLATE ASSEM - COWL WELL - CLOSING

CONSOLIDATED AIRCRAFT CORP. SAN DIEGO, CALIF.

DWG. SIZE D

28P5097

ENG. FILE

2605782

LET	ALTERATION	DATE	BY
A	1/32 DIM. WAS 1/16	3-[illegible]-43	[illegible]
B	1/32 DIM WAS 1/8 NO WT. CHG.	6-21-43	[illegible]
C.	IN B/M, FOR -7- REPLACED "K6061 X 5/8 AL. ALLOY, 46S1-T WITH "K-2- A27RT X 5/8", "FOR -8, REPLACED "K6061 X 6 1/2, AL. ALLOY 46S1-T WITH "K-2- A27RT X 6 1/2" (WT. CHG. NO)	4-22-44	PULSE

PBY-5, E.O. 38443A
28-SIMF
E.O. A16275

10 1/16 — 3 5/16 — 1/16 — 9/16 — 1 5/8 — 1 5/8 — 1/2 — 1 1/16 — 2 3/8 — 2 3/8 — 2 23/32 — 3/4 — 2 1/2 — 2 1/4 — 16° — 5/16

(A) (B) (5) (6) (7) (8)

ANGLE (7) — ANGLE (8) — CHANNEL (6)

A — A

DRILL #10 (.193) SHOLES TO MATCH HOLES IN 28-0-3039-14

AN425-D4 5 PLACES. FLUSH IN -6

DRILL 25/64 (.3906) 4 HOLES

AN442-D4 4 PLACES

2 3/32 — 3/8 — 3 1/4 — 2 1/4 — 5 1/2 — 5/8 — 5/8 — 5/8 — 5/32

DRILL #10 (.193) 2 HOLES

DRILL #10 (.198) 3 HOLES TO PICK UP EXISTING BOLTS THRU OIL TANK & FIREWALL FLANGES

5/8 — 4 — 3 3/8 R

SECTION A-A

FINISH CO.	
Z	ANODIC TREATMEN
P	P-27 PRIMER
AP	ALUMINIZED PRIMER
C	CADMIUM PLATE

ASSY. DASH NO.	MODEL	NEXT ASSY.	REQ.
	28-5AMN	28P5000	2
	28-6AMC	28P5000	2
	28-5MN	28P5000	2
	28-5MC	28P5000	2
	28-6NA	28P5000	2
	PBY6A	28P5000	2
	PBY6B	28P5000	2
	28-5ME	28P5000	2
	PBY-5	28P5000	2

REQUIREMENTS PER AIRPLANE

REPLACES — Assy. Wt. — Calc. Wt.

REPLACED BY — Act. Wt.

UNLESS OTHERWISE SPECIFIED ± 1/32 — SCALE 12"=1'-0"

STAMP PART NUMBER WHERE SHOWN

"15" ON

PART No.	STOCK	MATERIAL	SPEC.	LH REQ.	RH REQ.	LH REQ.	RH REQ.	LH REQ.	RH REQ.	LH REQ.	RH REQ.	LH REQ.	RH REQ.
	PARTS LIST PER ASSY.			-0		-2		-3		-4		-5	
-8	K-2-A27RT X 6 1/2												
-7	K-2-A27RT X 5 5/8												
-6	PBY-5 5/4 X 12	AL. ALLOY 47A10 T		1									

A C		7/30/43	2-1-43	2-4-43		
NAVY None	Z-P-AP					
HEAT TREAT	FINISH	DRAFT	CHECK	STRUCT.	MAT.	ADVICE

NAME SUPPORT-PROP CONTROL-FULL-FEATHERING PUMP.

CONSOLIDATED AIRCRAFT CORP. SAN DIEGO, CALIF.

OPP. HAND None

DWG. SIZE D — 28P5102

R

LET	ALTERATION	DATE	BY
	28-5 REF		
A	REMOVED -4 FROM PART OF DWG.		
	& ADV. DIM'S CHANGED TO -8		
B	-8 WAS .690 - .710 & .710 MAXIMUM BEND		
	WITH STRAIGHT TANGETS AT = 2		
C	REV'D -10 & REPLACED IT		
	WITH 32P5080. DIM. 1 1/16		
	WAS 3/8 WT. CHG. MADE		
D	ADDED NOTE "EXCESS... ONLY."		
	NO WT. CHG.		
E	B2P5080-6 WAS 32P5080		
	& ADDED (REF) TO DIM. 1 5/16		
	NO WT. CHG.		
F	IN REQ PER AIRPLANE BLOCK ADDED		
	LIMITATIONS "7-80" FOR C.B187-6.		
	NO WT. CHG.		
G	IN B.M. FOR -12 REPLACED "46823		
	GR.A" WITH "AN-QQ-S-685." FOR -8		
	& -9 REPLACED SPEC. "A7814" WITH		
	"AN-QQ-S-685" IN H.T. BLK'S REPLACED		
	"NORMALIZE" WITH "90,000 TO 125,000"		
	NO WT. CHG.		

DRILL #F 2 HOLES AFTER NORMALIZING AND AFTER REMOVING 1" STRIP

$5\frac{5}{8}$

$4.875 \pm .010$

$2.437 \pm .010$

$\frac{5}{16}$

$\frac{1}{2}R$

$\frac{7}{16}$

1"

$2\frac{7}{16}$

$2\frac{9}{16}$

THIS 1" STRIP TO BE CUT OUT AT DOTTED LINES AFTER NORMALIZING

DRILL #F 1 HOLE

2"R

$7\frac{25}{16} \pm .010$

(6) WELD ASSEM.

(C) (E) 32P5080-6 BEND FLANGES

(B) $\frac{1}{4}$

$\frac{11}{16}$ (REF) (E)

$6\frac{5}{16}$ DIA $+\frac{1}{32}$ -0

$\frac{1}{8}$

$\frac{1}{4}$

(C)

$\frac{1}{8}R$

DRILL $\frac{7}{64}$ THRU (4 HOLES)

$3\frac{1}{2} \pm \frac{1}{64}$

(D) EXCESS WELD METAL MUST BE CUT AWAY SO THAT LUG & WELD ARE FLUSH. ON ONE SIDE OF BRACKET ONLY.

(F) C-70496 #168 $\frac{+.200}{-.000}$ C.9876-#-80 fC.70496 #118-167. C-70496 #1-#117

(7) WELD ASSEM.

BREAK CORNER

$\frac{1}{4}$

$\frac{3}{16}R$

(12)

(8)

$1\frac{9}{16}$

(B)

(9)

$\frac{1}{4}$ - CUT BACK

$\frac{3}{16}R$ (B)

(C)

(A)

$\frac{1}{2}$

$1 \pm .005$

2

BEND RADII $\frac{1}{16}$

ASSY. DASH NO.	MODEL	NEXT ASSY.	REQ.
	PBY-5A	28P5100	2
	PBY-5	28P5100	1
	ABY-5	28P5100	2

REQUIREMENTS PER AIRPLANE

REPLACES

REPLACED BY

CASS. WT.

ACT. WT.

SCALE 12" = 1'-0"

+ 1/32 (.031) ON TOOL

STAMP PART NUMBER WHERE SHOWN

PART NO.	STOCK	MATERIAL	SPEC.	LH REQ.	RH REQ.	LH REQ.	RH REQ.	LH REQ.	RH REQ.
32P5080-6				2					
-8	ANGLE 46 x 1 1/2	CH ASSY	AN-QQ-S-685	1					
28P5111-7	WELD ASS'Y.								
32P5080-6				2					
-12	ANGLE 3/8	CH ASSY	AN-QQ-S-685	1					
-9	.090 x 2 3/8 x 11 3/4	CH ASSY	AN-QQ-S-685	1					
-8	.090 x 2 3/8 x 7 1/8	CH ASSY	AN-QQ-S-685	1					
28AP5111-6	WELD ASS'Y								
28P5111-7	WELD ASS'Y.			1					
28P5111-6	WELD ASS'Y.			1					

PARTS LIST PER ASSY.

DRAFT	GENERAL	STRUCT	MAT	ASSEM	ENG	-0	-2	-3	-4

AC

NAVY 90,000 TO 125,000 PSI

HEAT TREAT

G-P-AP

FINISH

NAME BRACKET

POWER PLANT-STARTER-GENERATOR

CONSOLIDATED AIRCRAFT CORP. San Diego, Calif.

OPP. HAND

DWG. SIZE D

28P5111

28P5111

E.O. 31367

LET	ALTERATION	DATE	BY
A	REMOVED WELDING AND RELATING BOSS	9-13-44	Offner

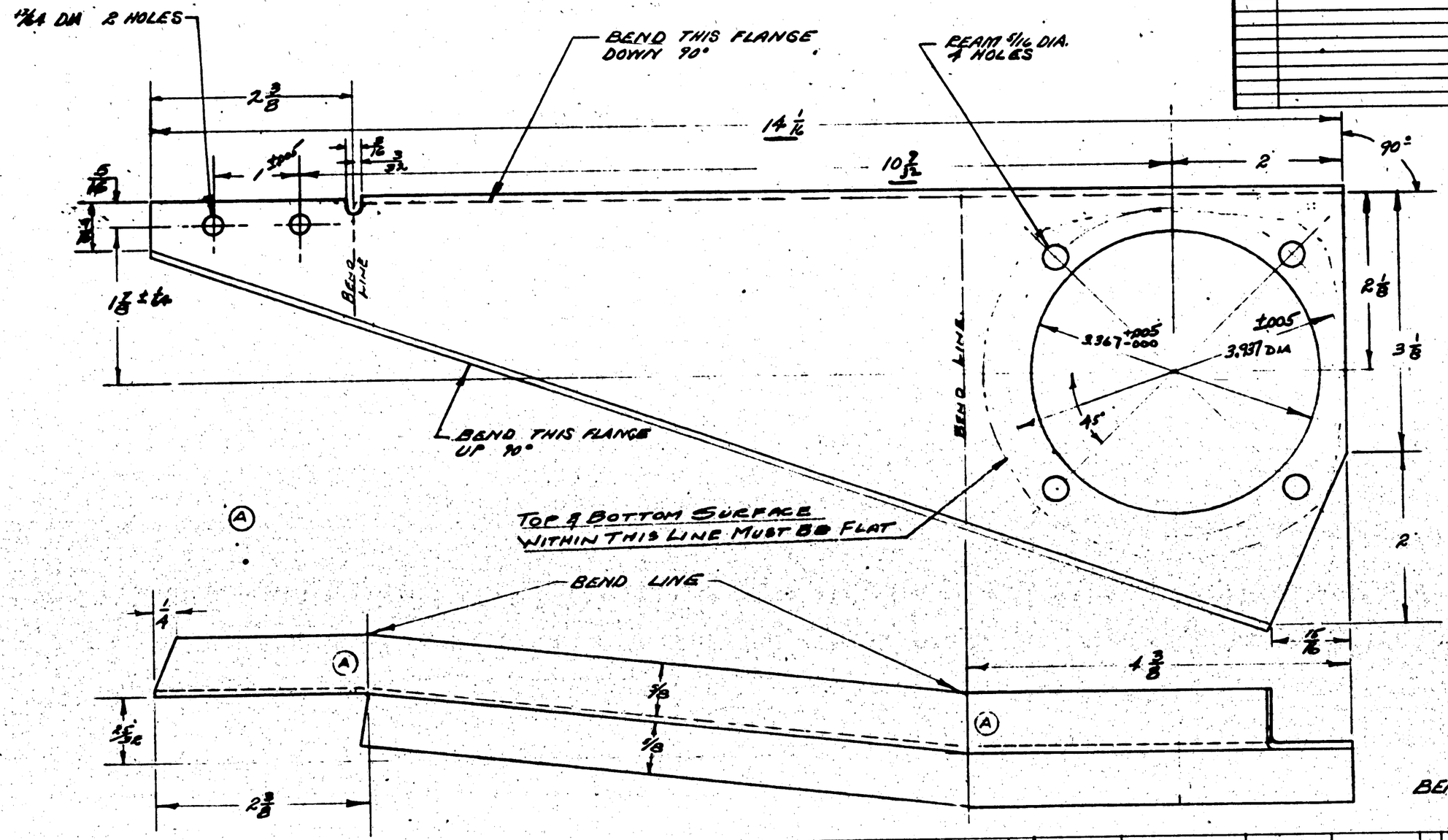

FINISH CODE	
Z	ANODIC TREATM.
P	P-27 PRIMER
AP	ALUMINIZED PRIMER
C	CADMIUM PLATE

BEND RADII 1/8

C-77N3/00976
W-1117N/16

ASSY DASH No.	MODEL	NEXT ASSY	REQ
	P8Y-5A	28P5100	2
	P8Y-5A	28P5100	2
	P8Y-5	28P5100	2

REQUIREMENTS PER AIRPLANE

REPLACES — CALC WT.

REPLACED BY — ACT. WT.

LIGHT OR DIMENSIONS UNLESS OTHERWISE SPECIFIED: 1/32 & NOTED | SCALE: 12" = 1'0"

STAMP PART NUMBER WHERE SHOWN

PART NO.	STOCK	MATERIAL	SPEC.	LH REQ. -0	RH REQ. -0	LH REQ. -2	RH REQ. -2	LH REQ. -3	RH REQ. -3	LH REQ. -4	RH REQ. -4	LH REQ. -5	RH REQ. -5
28P5112 ●	.071 X T x 1.434	CH. MOLY	4715										

PARTS LIST PER ASSY.

AC		Engineering Approved						
NAVY NONE	C-P-AP	10/26/44						
HEAT TREAT	FINISH	DRAFT	CHECK	STRUCT.	MAT	ASS'MBLY	ENG.	

NAME: BRACKET POWER PLANT & GENERATOR

CONSOLIDATED AIRCRAFT CORP. SAN DIEGO, CALIF.

OPP. HAND

SIZE D — 28P5112

R

LET	ALTERATION	DATE	BY
A	ADDED 1⅛ & 2⅛ DIM TO FACE OF DWG	6-16-41	

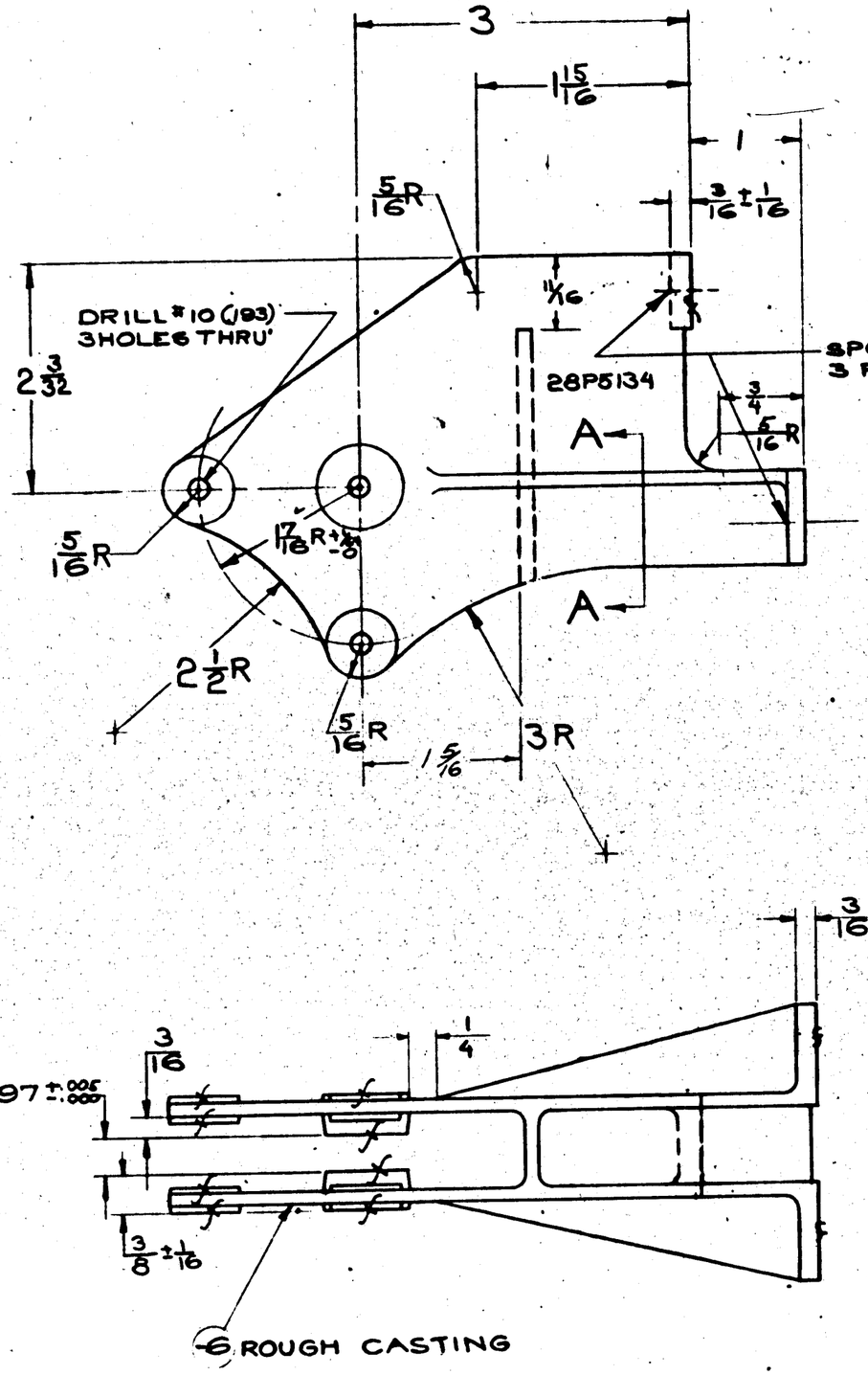

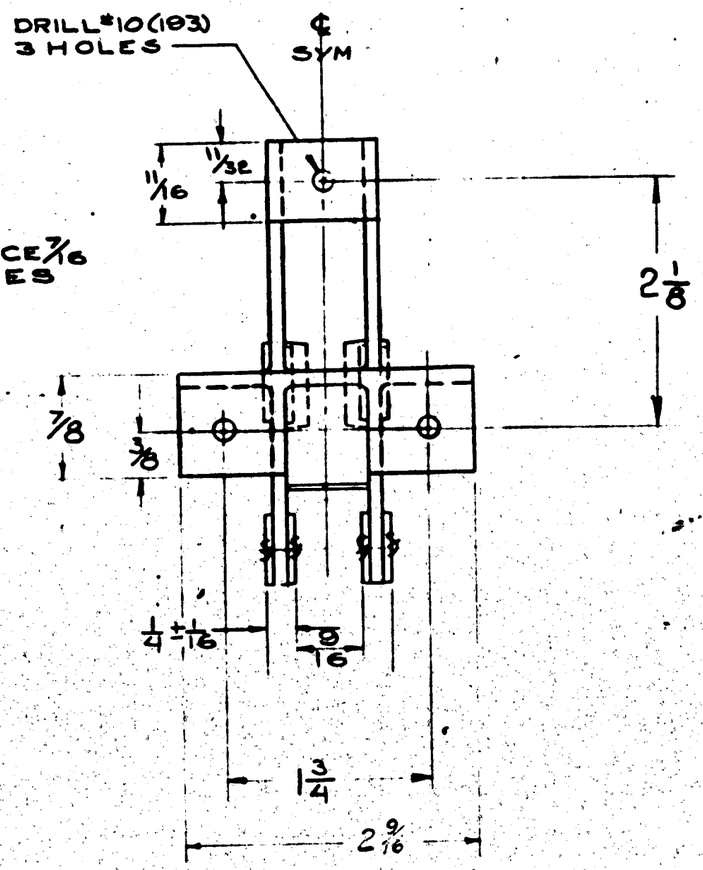

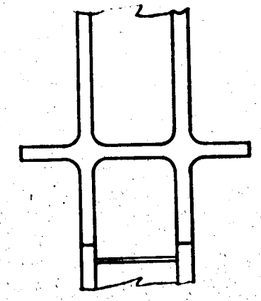

SECTION A-A

FINISH

Z	ANODIC TREAT.
P	P-27 PRIMER
AP	ALUMINIZED PRIMER
C	CADMIUM PLATE

4. BREAK ALL PATTERN CORNERS 1/32 R
3. TOLERANCE ON EDGE DISTANCE AROUND HOLES ± 1/16
2. UNLESS OTHERWISE SPECIFIED:
ALL WALL THICKNESSES 1/8
ALL FILLET RADII 1/8
1. LIMITS ON DIMENSIONS:
CASTING: ± 1/32
MACHINE: ± .010

C-77713
C-88476

ASSY. DASH NO.	MODEL	NEXT ASSY.	REQ.
	PBY-5B	28P5134	2
	PBY-5A	28P5139	2
	PBY-5A	28P5118	2
	PBY-5	28P5118	2

REQUIREMENTS PER AIRPLANE

REPLACES — CALC. WT.

REPLACED BY — ACT. WT.

LIGHT ON SHOULDERS UNLESS OTHERWISE DIMENSIONED ± NOTED

SCALE 12" = 1'-0"

STAMP PART NUMBER WHERE SHOWN

PART NO.	STOCK	MATERIAL	SPEC.	LH REQ.	RH REQ.	LH REQ.	RH REQ.	LH REQ.	RH REQ.	LH REQ.	RH REQ.	LH REQ.	RH REQ.
28P5134B		AL-AL CAST	46AlCu4	-0		-2		-3		-4		-5	

PARTS LIST PER ASSY.

AC
NAVY NAF SAS
HEAT TREAT

Z-P
FINISH

KAREL 2-10-41
DRAFT | CHECK | STRUCT | MAT | APPROV | ENG.

NAME BRACKET
CARB. AIR CONTROL
CONSOLIDATED AIRCRAFT CORP. San Diego, Calif.

OPP. HAND

SIZE D
DWG. 28P5134

R

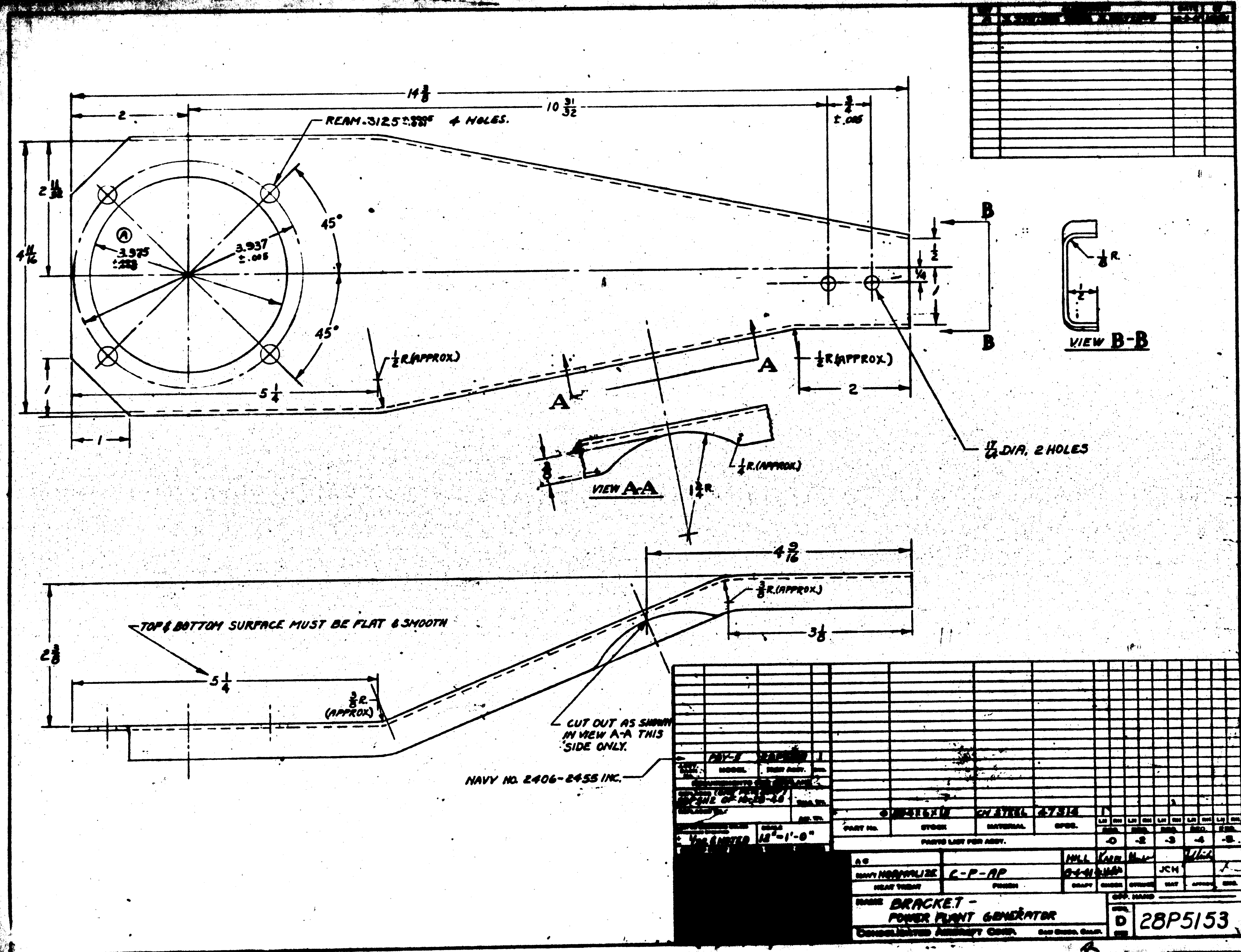

14 3/8
10 31/32
2
REAM .3125 4 HOLES.
3/4 ±.005
2 11/32
4 11/16
3.975
3.937 ±.005
45°
45°
1/2 R(APPROX)
1/2 R(APPROX.)
5 1/4
1
2
A
A
B
B
1/2
1/4
1
1/8 R.
1/2
VIEW B-B
17/64 DIA. 2 HOLES
1/4 R.(APPROX.)
3/8
VIEW A-A
1 3/4 R.
4 9/16
3/8 R.(APPROX.)
3 1/8
TOP & BOTTOM SURFACE MUST BE FLAT & SMOOTH
2 3/8
5 1/4
3/8 R. (APPROX)
CUT OUT AS SHOWN IN VIEW A-A THIS SIDE ONLY.
NAVY NO. 2406-2455 INC.
PBY-5
MODEL
PART No.
STOCK
MATERIAL
SPEC.
CM STEEL
PARTS LIST FOR ASSY.
-0
-2
-3
-4
-5
12"=1'-0"
NORMALIZE
HEAT TREAT
C-P-AP
FINISH
HILL
JCH
DRAFT
CHECK
NAME BRACKET - POWER PLANT GENERATOR
CONSOLIDATED AIRCRAFT CORP.
SAN DIEGO, CALIF.
D
28P5153

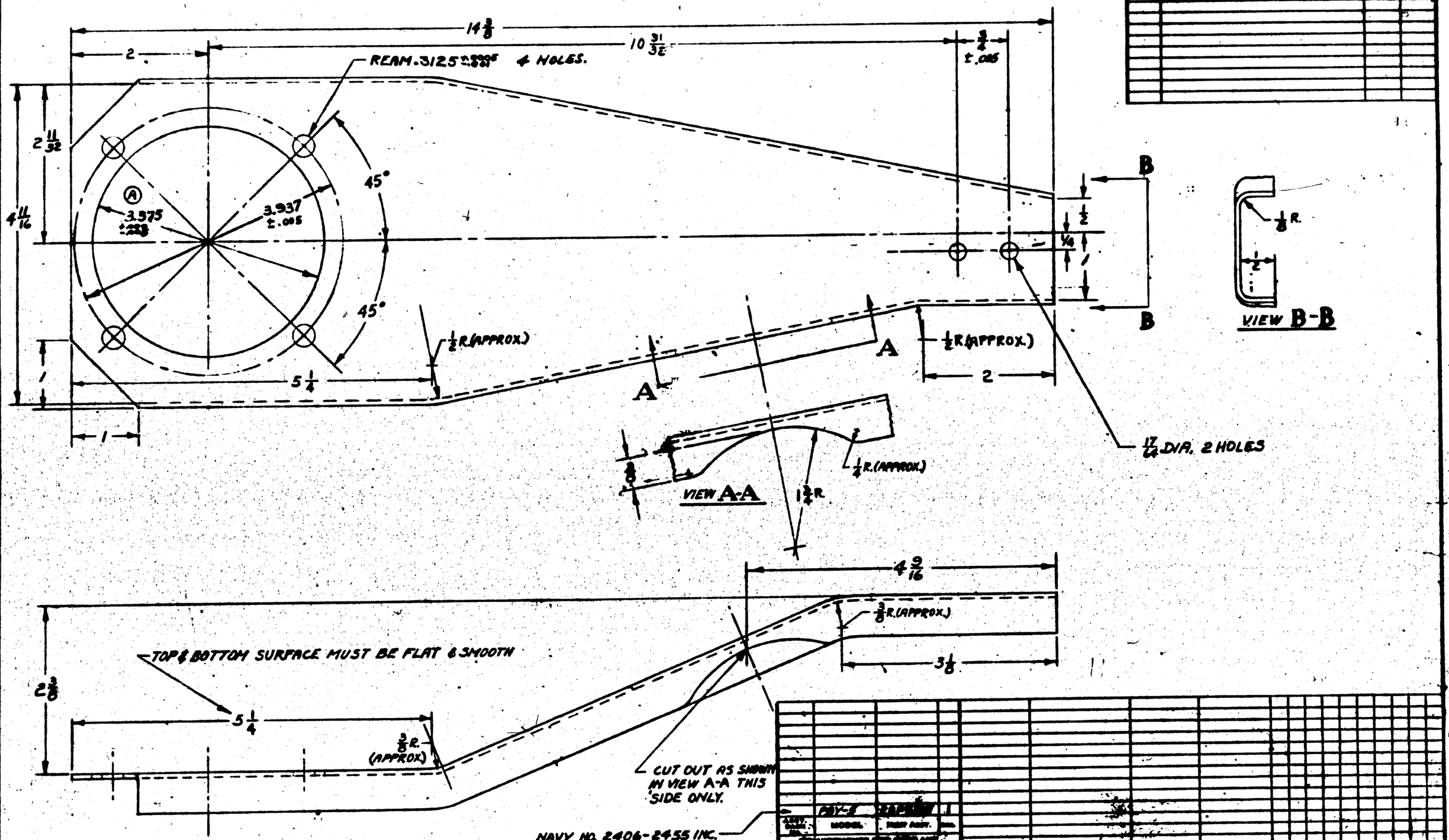
14 3/8
10 31/32
2
REAM .3125 +.0005 -.0000 4 HOLES.
3/4 ±.005
2 11/32
4 11/16
45°
45°
Ⓐ
3.375 ±.005
3.937 ±.005
5 1/4
1
1/2 R (APPROX.)
1/2 R (APPROX.)
2
A
A
B
B
1/2
1/4
1/8 R.
1/2
VIEW B-B
17/64 DIA. 2 HOLES
3/8
VIEW A-A
1 3/4 R.
1/4 R. (APPROX.)
4 9/16
3/8 R. (APPROX.)
3 1/8
2 3/8
TOP & BOTTOM SURFACE MUST BE FLAT & SMOOTH
5 1/4
3/8 R. (APPROX.)
CUT OUT AS SHOWN IN VIEW A-A THIS SIDE ONLY.
NAVY NO. 2406-2455 INC.

| | | |

LET	ALTERATION	CHK	DATE

5 5/8

4.875±.010

2.937±.010

DRILL 21/64 2 HOLES

5/16 R

7/8

1/2 R

DRILL 1/2

2 7/16

2 5/16

2R

7.937±.010

6

90°

15°

6 +1/32 −0

5 1/8 ±1/64

1/2

1/8

2 1/4

8 WELD AS SHOWN

45°

7

17/64 - 2 HOLES

A A

B B

45°

1 3/4 R

1 1/2

2R

3 1/2

1 5/8

3/8

3/4 ±.005

3/16

VIEW B-B

NOTE: ALL BEND RADII 1/8

4 1/4 R.

6 1/2

NAVY NO. 2406-2455 INC.

DRILL 13/32 - 4 HOLES TO SUIT STUDS ON G.E. GEN. #2CM5641

8 (REF)

7/16

7 (REF)

1/4 R (AREAS SHOWN MUST BE FREE OF WELD)

SECT. A-A

ASSY. DASH NO.	MODEL	NEXT ASSY.	USE
	PBY-5	28P5100	/

REQUIREMENTS PER AIRPLANE

REPLACED (USE PER UNIT): 28P5111 OF 10-26-40 — SALV. WT.

REPLACED BY — ASY. WT.

UNLESS OTHERWISE SPECIFIED: ± 1/32 ± 1/2° — SCALE: 12" = 1'-0"

STAMP PART NUMBER WHERE SHOWN

PART No.	STOCK	MATERIAL	SPEC.	LH REQ.	RH REQ.	LH REQ.	RH REQ.	LH REQ.	RH REQ.	LH REQ.	RH REQ.	LH REQ.	RH REQ.
28P5154-2	.094 X 1 3/4 X 2 1/2	C.M. STL	47S14									1	
28P5154-7	.094 X 1 3/4 X 3 1/2	C.M. STL	47S14									1	
28P5154-8	.078 X 10 1/2 X 15 1/2	C.M. STL	47S14									1	

PARTS LIST PER ASSY. — -0 | -2 | -3 | -4 | -8

AC — KAGEL 8-9-41

NAVY NORMALIZE — HEAT TREAT — C-P-AP — FINISH — DRAFT — CHECK — STRUCT — MAT — APPROV — ENG.

NAME BRACKET ASSEM — OPP. HAND

POWER PLANT-STARTER-GEN.

CONSOLIDATED AIRCRAFT CORP. SAN DIEGO, CALIF.

SIZE D — 28P5154

MATERIAL NOTES-

1-MAT'L. FOR -6L & -6R MAY BE-
(A) 2-A61ST 1 x 3 1/2, OR
(B) K78J X 3 1/2, AL. AL. EXTR., SPEC. QQ-A-354-T.

2-MAT'L. FOR -8L & -8R MAY BE-
(A) 108 X 2 1/4 X 2 5/8, 24ST. ALC., SPEC. QQ-A-362-T, OR
(B) K78Y X 2 1/4, AL. AL. EXTR., SPEC. QQ-A-354-T.

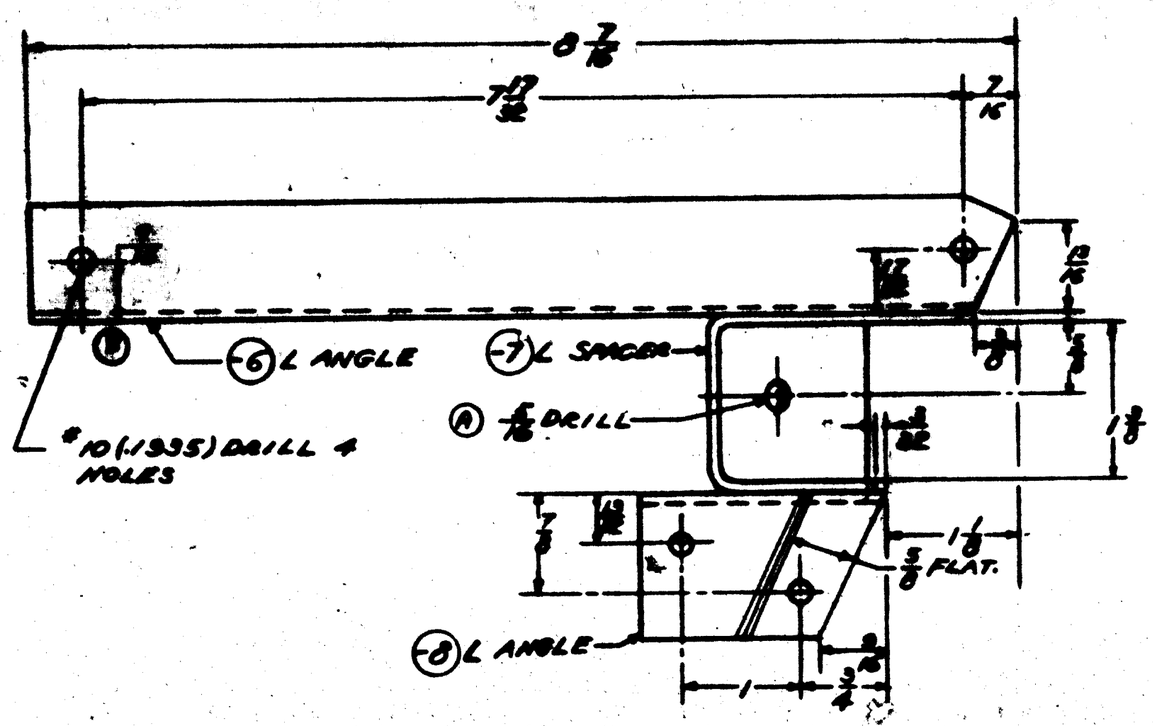

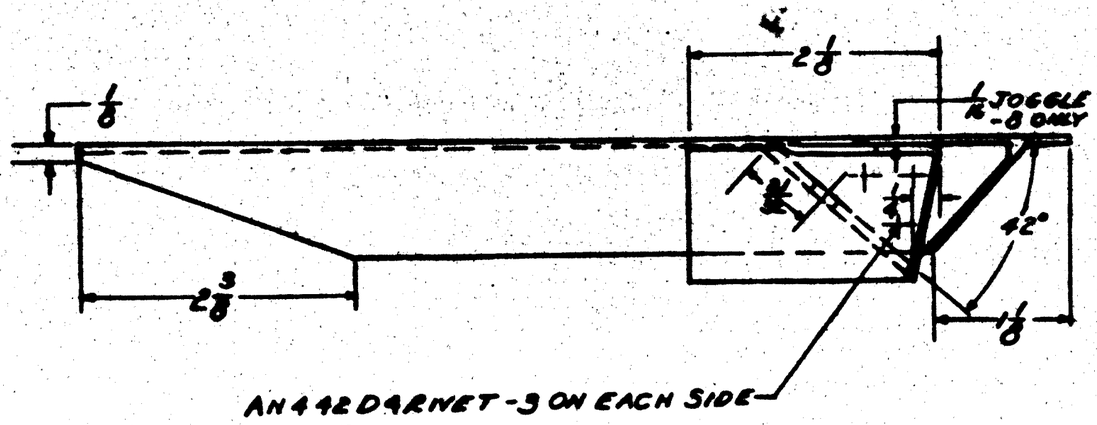

AN442D4RNET-3 ON EACH SIDE

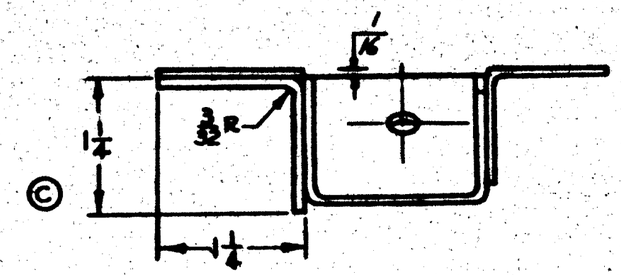

NOTE: PARTS HAVE BEEN MADE FOR 52 PBY-5A's ON C-88476.

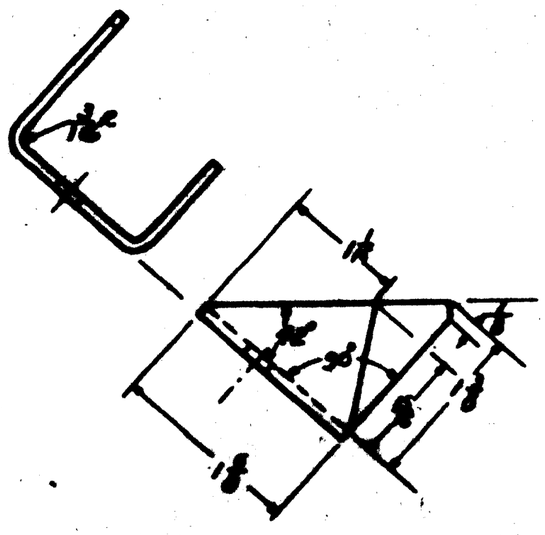

DETAIL VIEW OF -7L SPACER.

FINISH CODE	
Z	ANODIC TREATMENT
P	P-07 PRIMER
AP	ALUMINIZED PRIMER
C	CADMIUM PLATE

C-88476
C-91876

-4	NOTED	NOTED	NOTED
-3	NOTED	NOTED	NOTED
-2	[illegible]	[illegible]	[illegible]
-1	NOTED	NOTED	NOTED
-0	NOTED	NOTED	NOTED
PART NO.	SYMBOL	MATERIAL	SPEC.

PARTS LIST FOR ASSY.

SCALE	12" = 1'-0"		
HEAT TREAT	NONE	FINISH	Z-P-2AP

NAME: BRKT ASS'Y-FUEL SYSTEM PUMP VALVE-UPPER FRONT PULLEY.

CONTRACT NO. [illegible]

SIZE: D

DWG. NO. 28P5160

LET	ALTERATION	DATE	BY
A	P/N WAS [illegible] -310 CHANGED TO 32P5080-11 CHANGED TO [illegible]		
B	CHG. -10 WAS -7 IN -7 WELD ASSY IN B/M NO WT CHG		
C	REMD DIM. LTRS. ADDED 32P5080-8(2) WAS 32P5080-8(1) NO WT CHG	6-22-43	

E.O. A43084

E.O. A61432

$1.875 \pm .010$

$2.437 \pm .010$

$\frac{9}{16}$ $\frac{5}{16}R$ $\frac{5}{16}R$ $\frac{1}{2}$ $\frac{1}{8}$ $\frac{1}{8}$ $\frac{1}{8}$

$\frac{1}{2}R$

$2\frac{7}{16}$ $2\frac{5}{16}$

$\frac{21}{64}$ DRILL 2 PLACES (AFTER NORMALIZING)

$\frac{1}{2}$ DRILL (1 HOLE)

2R

-8

-7 WELD ASSEM.

-10

$7\frac{15}{16} \pm .010$

$\frac{3}{16}$ $1\frac{1}{2}$

R

$6\frac{+\frac{1}{32}}{-0}$ DIA.

C A

$\frac{1}{16}$ $\frac{7}{8}$ $\frac{1}{8}$

A $\frac{7}{8}$ 32P5080-6 LUG C A

$\frac{17}{64}$ DRILL THRU (4 PLACES)

$1\frac{1}{2}$ $\frac{7}{16}$

$1\frac{7}{8}$

NOTE: ALL BEND RADII $\frac{1}{8}$ EXCEPT AS NOTED.

$2\frac{7}{16}$

$\frac{1}{2}R$ (TYP.)

$\frac{1}{2}$ $\frac{1}{4}R$ (TYP.)

$3\frac{5}{16} \pm \frac{1}{64}$

A -11

-6 WELD ASSEM.

AUX. VIEW
-6 WELD ASSEM. (REAR)

C: 91876
#1-90

PART NO.	STOCK	MATERIAL	SPEC.	LH REQ. -0	RH REQ. -2	LH REQ. -3	RH REQ. -4	LH REQ. -5	RH
-10 .078 x 2 x 10½		CM. SHT. STL.	MIL-S-5059	1					
32P5080-6					1				
-8 .078 x 2 x 9		CM. SHT. STL.	MIL-S-5059	1					
-7 WELD ASSEM.									
-11 .078 x 2 x 10½		CM. SHT. STL.	MIL-S-5059			1			
32P5080-6							1		
-6 WELD ASSEM.									
-7 WELD ASSEM								1	
-6 WELD ASSEM.									1

PARTS LIST PER ASSY.

ASSY. DASH NO.	MODEL	NEXT ASSY.	QUAN.
	28P5164		1

REQUIREMENTS PER AIRPLANE

REPLACES — Calc. Wt.

REPLACED BY — Act. Wt.

Unless Otherwise Specified Dimensions are Shown: ± 1/32 & NOTED

SCALE 12" = 1'-0"

STAMP PART NUMBER WHERE SHOWN

AE

NAVY 50-M-[illegible]

HEAT TREAT

C-P-AP

FINISH

DRAFT 3-26-43

CHECK 3-16-43

STRUCT

MAT

APPROV. 4-1-43

ENG.

NAME BRACKET - POWER PLANT - STARTER - GENERATOR

OPP. HAND

CONSOLIDATED AIRCRAFT CORP. San Diego, Calif.

DWG. D SIZE

28P5164

R

LET	ALTERATION	DATE	BY
A	1/8 WAS 13/16, 8 1/2 WAS 8 11/32, 2 WAS 1 1/16, 3.375±.005 WAS 3.373	4-18-42	[illegible]

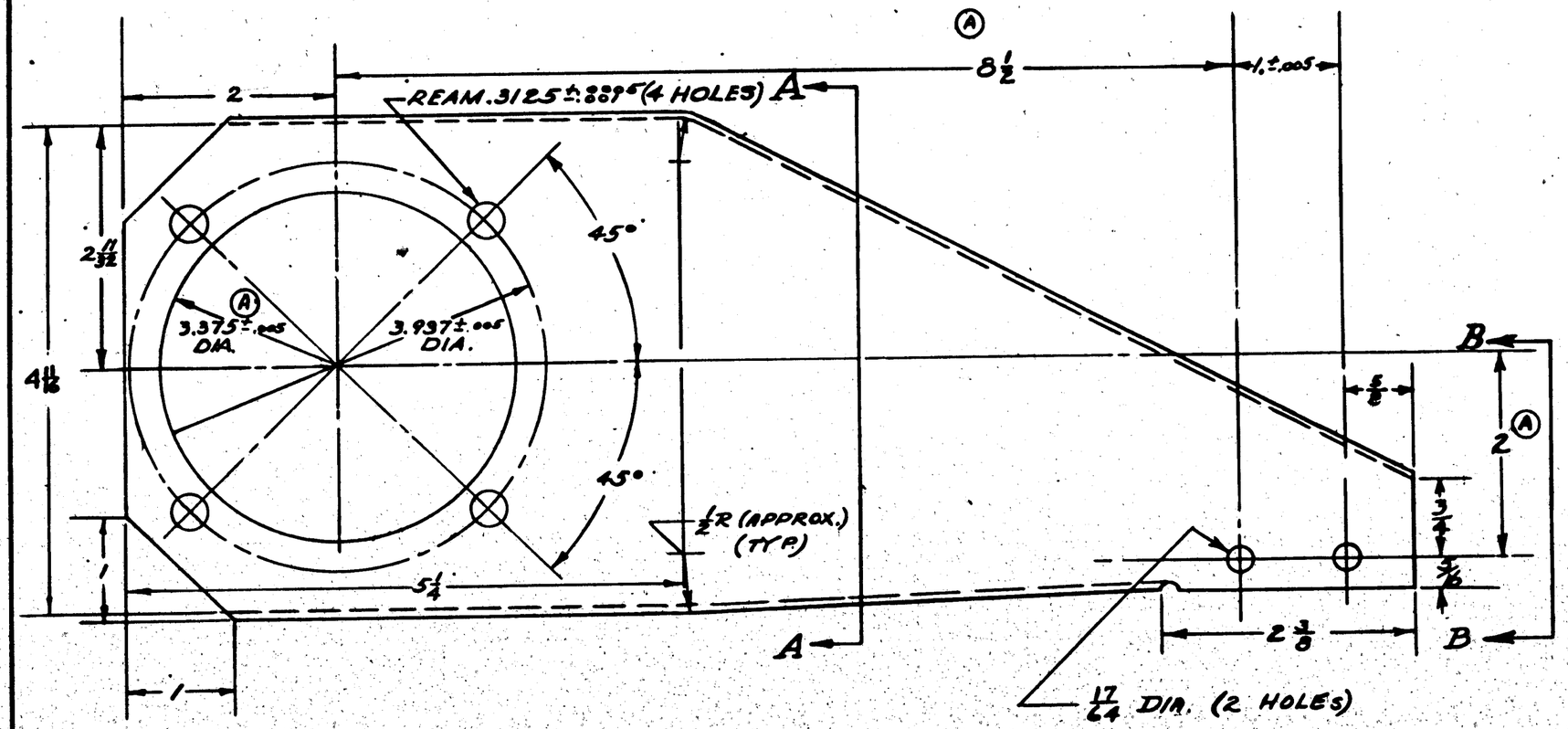

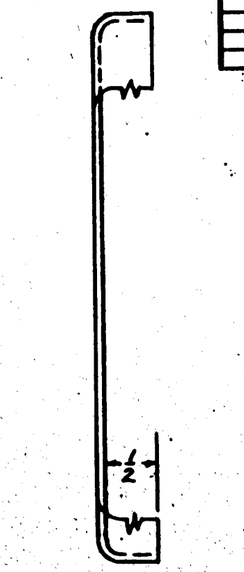

VIEW A-A

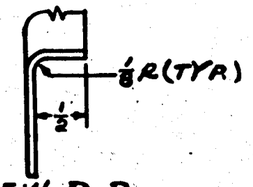

VIEW B-B

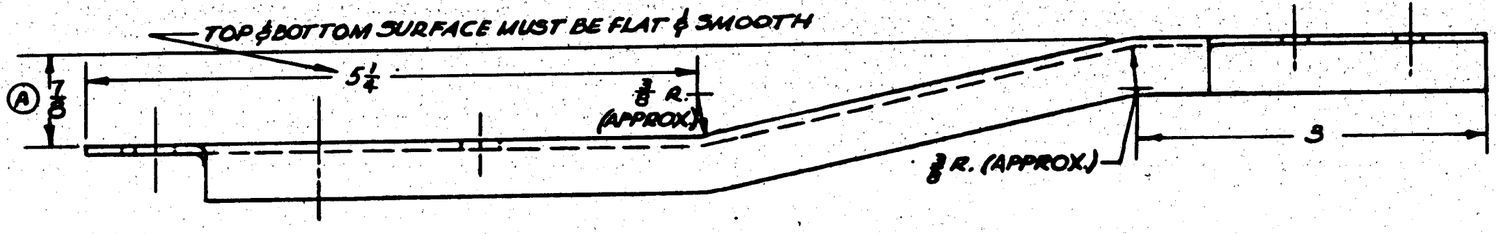

C-91876

RUSH RELEASED 3-27-42

ASSY. DASH No.	MODEL	NEXT ASSY.	QUAN.
	PBY-5	28P2100	1

REQUIREMENTS PER AIRPLANE

REPLACES — CMD. WT.

REPLACED BY — ADV. WT.

UNLESS OTHERWISE SPECIFIED DIMENSIONS ARE ± 1/32 — SCALE 12" = 1'-0

STAMP PART NUMBER WHERE SHOWN

PART No.	STOCK	MATERIAL	SPEC.	LH REQ.	RH REQ.	LH REQ.	RH REQ.	LH REQ.	RH REQ.	LH REQ.	RH REQ.	LH REQ.
PARTS LIST PER ASSY.	.093 × 6 × 13	C.M. SHT.	AN-QQ-A-665	-0	-2	-3	-4	-5				

AC — 90,000 NAVY 125,000 #/in² HEAT TREAT — FINISH

	DRAFT	CHECK	STRUCT	MAT	APPROV	ENG.
	3-26-42	3-27-42	[illegible]	[illegible]	4-2-42	

NAME BRACKET — POWER PLANT GENERATOR

CONSOLIDATED AIRCRAFT CORP. SAN DIEGO, CALIF.

OPP. HAND

DWG. D SIZE 28P5165

R

LET	ALTERATION	DATE	BY

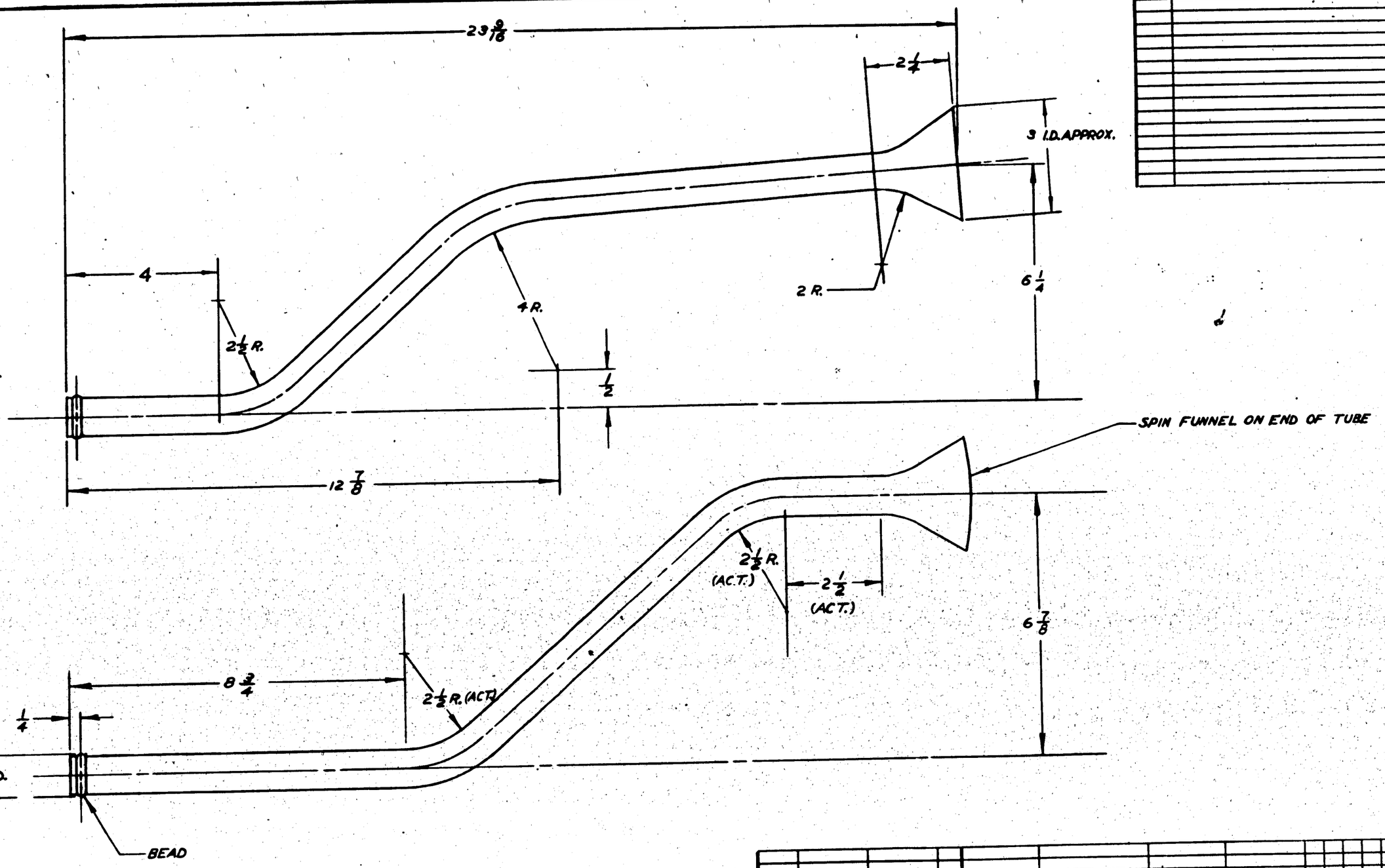

NOTE :

THIS PART MAY BE PURCHASED FROM WOLVERINE TUBE CO., DETROIT, MICHIGAN, OR WILSON GOLD STAMPING MACHINE CO., LOS ANGELES, CALIF.

M.C.R 289 & ON

APPROVED FOR TOOLING BY
F Howard
7/9/43

ASSY. SASH No.	MODEL	NEXT ASSY.	DRG.
	PBY-5A	28P5727	2

REQUIREMENTS PER AIRPLANE

REPLACES — CALC. WT. .48#

REPLACED BY — ACT. WT.

UNLESS OTHERWISE SPECIFIED ± 1/32 — SCALE 6" = 1'0"

STAMP PART NUMBER WHERE SHOWN

100 X .049 X 28 S2SOAL ALTCLAD WW-T-787

PART No	STOCK	MATERIAL	SPEC.	LH REQ.	RH REQ.	LH REQ.	RH REQ.	LH REQ.	RH REQ.	LH REQ.	RH REQ.	LH REQ.	RH REQ.
PARTS LIST PER ASSY.				-0		-2		-3		-4		-5	

AC		McMillan								
NAVY NONE	Z-P-GP	7-3-43								
HEAT TREAT	FINISH	DRAFT	CHECK	STRUCT	MAT	APPROV	ENG.			

NAME TUBE-ENGINE COMPARTMENT COOLING FRONT

OPP. HAND

CONSOLIDATED VULTEE AIRCRAFT CORP. SAN DIEGO DIVISION . . SAN DIEGO, CALIF.

DWG. D — DIVISION — 28P5530

28P5530

R

LET	ALTERATION	DATE	BY
A	ON FACE -7 REPLACED BY -8 & -9.		
	IN 3/4 REMOVED REF'TS OF -7.		
	ADDED -8 & -9 NO WT CH'G	8-12-43	B. RAY

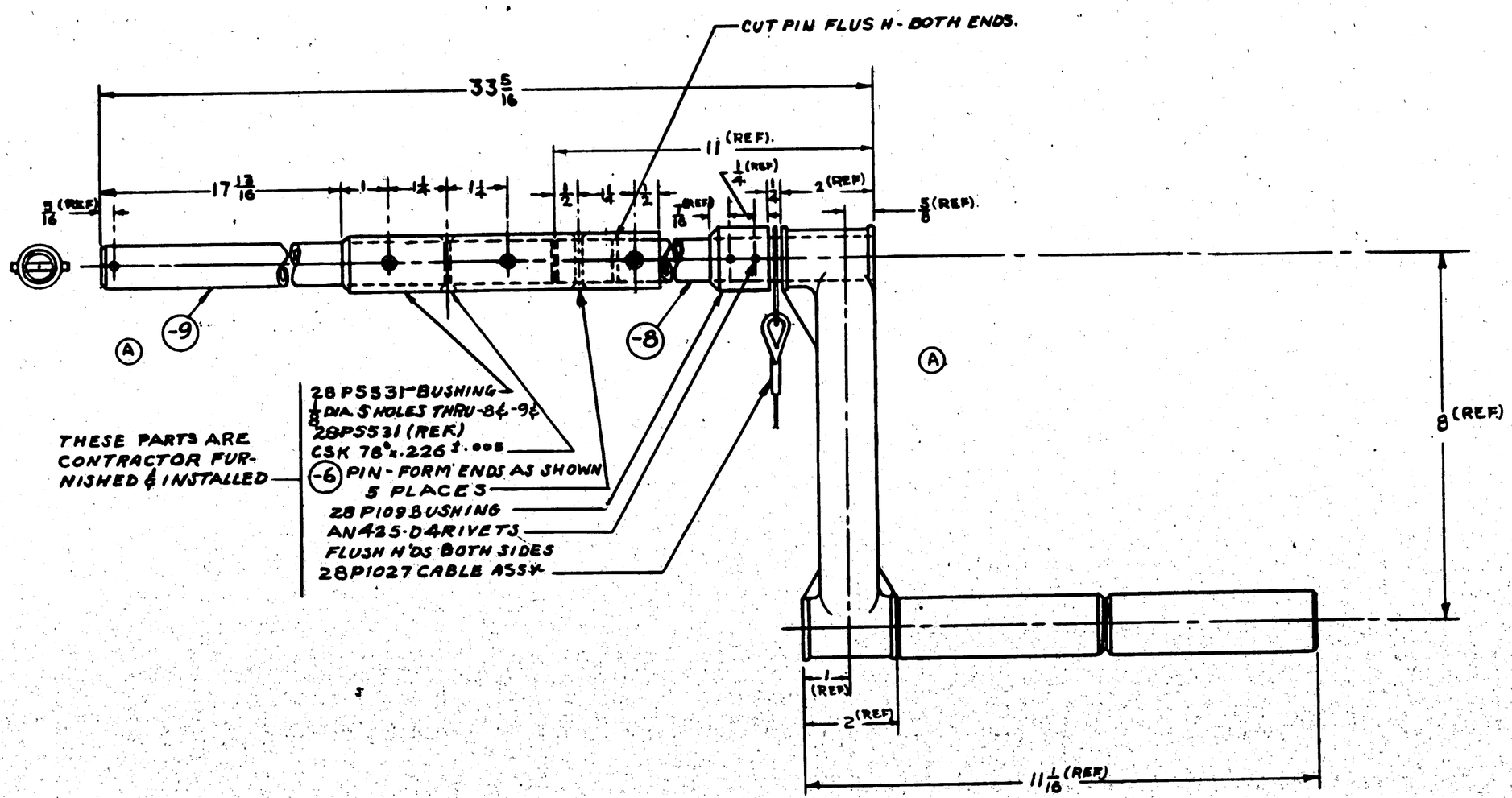

* GOVERNMENT-FURNISHED EQUIPMENT

MCR 2936 ON

ASSY. DASH No.	MODEL	NEXT ASSY.	QUAN.
	PBY-5A	28P5109	1

REQUIREMENTS PER AIRPLANE

REPLACES

REPLACED BY

NOTED Gross Wt. Asy. Wt.

SCALE 6" = 1'-0"

± 1/32

STAMP PART NUMBER WHERE SHOWN

PART No.	STOCK	MATERIAL	SPEC.
AN425D4			
28P1027			
28P5531			
28P109			
-9	MAKE FROM -7		
-8	MAKE FROM -7		
* -7	HAND CRANK ASSEM.		
-6	3/8 DIA x 1 1/2 ROD	C.R. STEEL	AN-QQS684-14

PARTS LIST PER ASSY.

LH REQ.	RH REQ.	LH REQ.	RH REQ.	LH REQ.	RH REQ.	LH REQ.	RH REQ.	LH REQ.	RH REQ.
-0		-2		-3		-4		-5	

A C		7-3-43				
NAVY		COLLINS 2-1943				
HEAT TREAT	FINISH	DRAFT	CHECK	STRUCT	MAT	APPROV	ENG.

OPP. HAND

NAME CRANK ASSEM. - STARTER

CONSOLIDATED VULTEE AIRCRAFT CORP. SAN DIEGO DIVISION . . SAN DIEGO, CALIF.

DWG. D SIZE 28P5532

28P5532

WT. CONT. FURN = 1.386#
WT. GOV. FURN. = 5.440#
TOTAL WT. = 6.826#

APPROVED FOR TOOLING BY Gerstine 7-18-43

LET	ALTERATION	DATE	BY

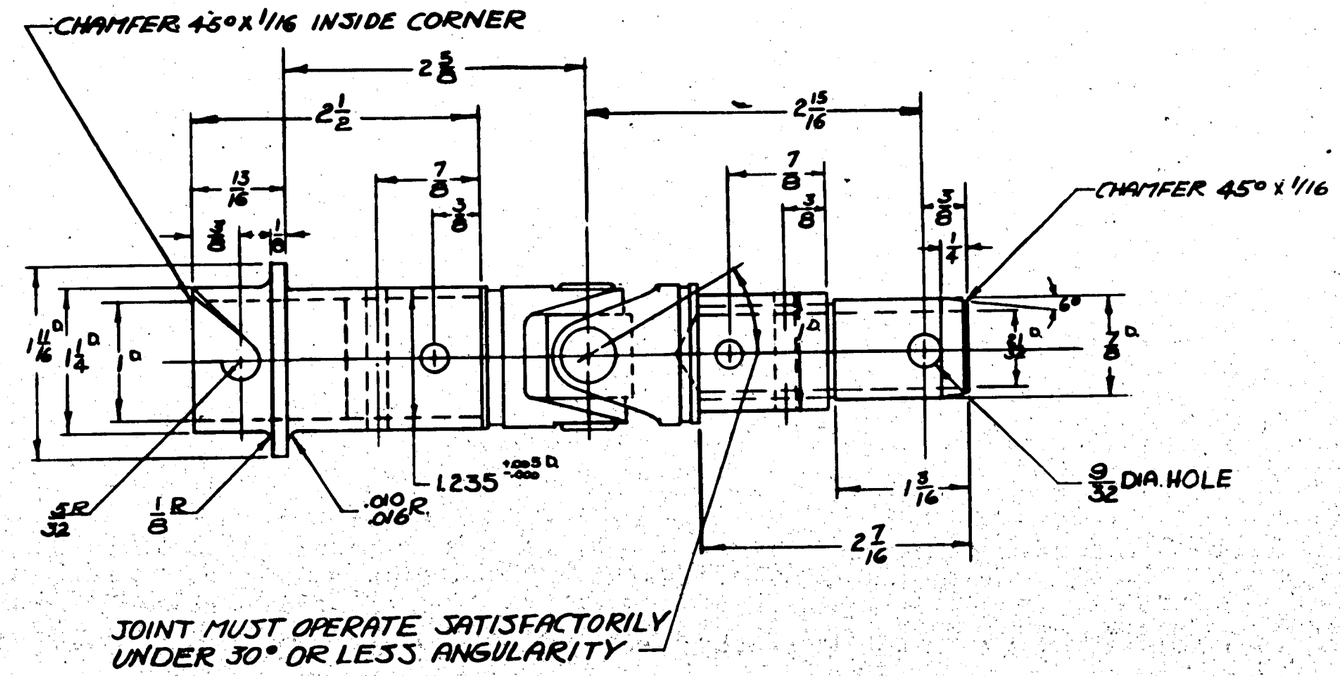

JOINT MUST OPERATE SATISFACTORILY UNDER 30° OR LESS ANGULARITY

NOTE:
PURCHASE TO DRAWING.
FINISH: C ALL DIMENSIONS APPLY AFTER PLATING.
TORQUE LOAD 5000 IN. POUNDS.
THIS PART MAY BE PURCHASED FROM THE APEX MACHINE & TOOL CO. DAYTON, OHIO. JOINT TO BE SIMILAR TO TYPE AC271 EXCEPT JOINT TO BE UNCOVERED.

M.C.R. 263

APPROVED FOR TOOLING BY
7/22-43

ASSY. DASH NO.	MODEL	NEXT ASSY.	SHD.
	PBY-5A	28P3026	2
	PBY-5	28P3026	2

REQUIREMENTS PER AIRPLANE

REPLACES	1.07 CALC. WT.
REPLACED BY	ACT. WT.
± .010	SCALE 12"=1'-0"

STAMP PART NUMBER WHERE SHOWN

PART No.	STOCK	MATERIAL	SPEC.	LH REQ.	RH REQ.	LH REQ.	RH REQ.	LH REQ.	RH REQ.	LH REQ.	RH REQ.	LH REQ.	RH REQ.
-6													
PARTS LIST PER ASSY.				-0		-2		-3		-4		-5	

AC		ROVER							
NAVY NOTED	NOTED	7-9-43							
HEAT TREAT	FINISH	DRAFT	CHECK	STRUCT	MAT	APPROV	ENG.		

NAME UNIVERSAL JOINT - STARTER CRANK

OPP. HAND

CONSOLIDATED VULTEE AIRCRAFT CORP. SAN DIEGO DIVISION . . SAN DIEGO, CALIF.

DWG. SIZE D

28P5534

28P5534

LET	ALTERATION	DATE	BY

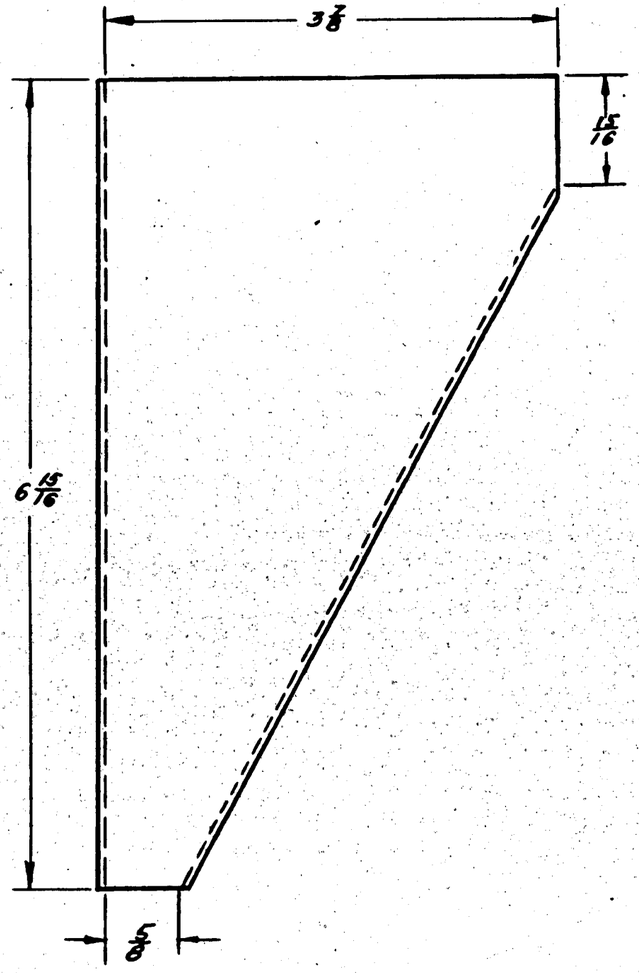

ALL BEND & RELIEF RADII 5/8

MCR 291 -1 & ON

-R	PBY-5A	28P5536	
-L	PBY-5A	28P5536	
ASSY. DASH No.	MODEL	NEXT ASSY.	REQ.

REQUIREMENTS PER AIRPLANE

REPLACES	-22 CALC. WT.
REPLACED BY	ACT. WT.
UNLESS OTHERWISE SPECIFIED DIMENSIONS ARE ± 1/32	SCALE 12"-1'0"

STAMP PART NUMBER WHERE SHOWN

PART No.	STOCK	MATERIAL	SPEC.	LH REQ. -0	RH REQ. -0	LH REQ. -2	RH REQ. -2	LH REQ. -3	RH REQ. -3	LH REQ. -4	RH REQ. -4	LH REQ. -5	RH REQ. -5
	.063 x 5 1/16 x 6 15/16	24ST ALCLAD	QQA362-T										

PARTS LIST PER ASSY.

AC		SNAW						
NAVY NONE	Z-P	9-2-43	9-9-43					
HEAT TREAT	FINISH	DRAFT	CHECK	STRUCT	MAT	APPROV	ENG.	

APPROVED FOR TOOLING BY

C.S WILLIS 9-4-43

NAME SUPPORT-ANTI ICING FLUID TANK

OPP. HAND 28P5537-R

CONSOLIDATED VULTEE AIRCRAFT CORP. SAN DIEGO DIVISION . . SAN DIEGO, CALIF.

DWG. D SIZE

28P5537

R

28P5537

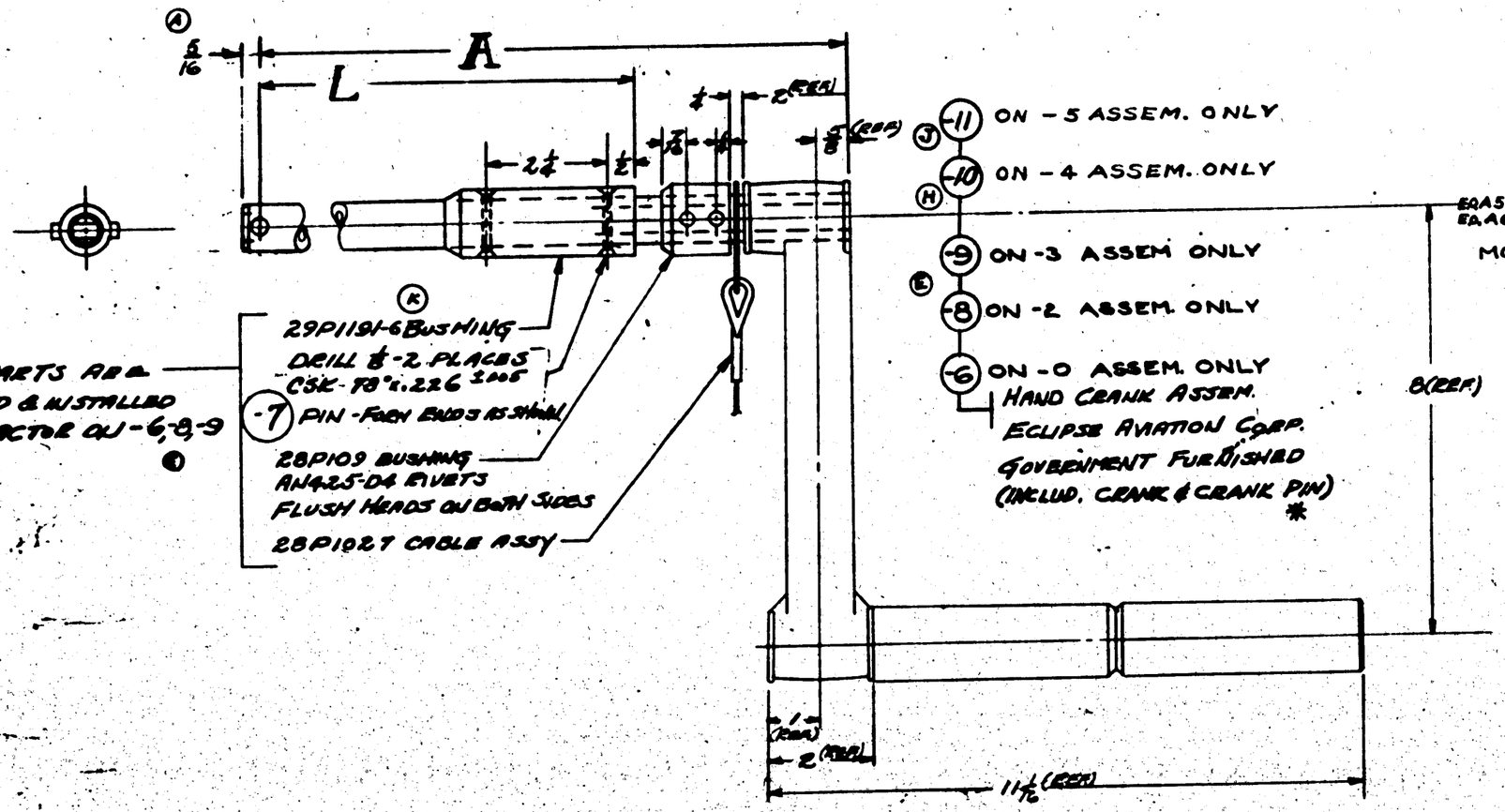

LET	ALTERATION	DATE	BY
A	PART CHANGED FROM 1 PER ASSY TO 2 PER ASSY	4-8-40	H.M.
	1 DRILLED -2 ASSY (SEE DWG)		
	ADDED COTTER PIN & WASHER		
	DRILLED -2 ASSY FROM 29P1190 TO 29P1190A	4-8-40	
	CHG. IN THE NEXT ASS'Y. CO'S -		
	UNIT OF -0 ASS'Y 29P1000		
	TO 29P1000Y	4-8-40	Kayl
C	IN A/M - CHANGED REQM'T FOR -7 FROM 1 PER ASSY TO 2 PER ASSY	4-10-40	SHIRLEY
D	ADD PB2Y-3 REQMT'S	5-6-40	MKC
E	ADD -3 ASS'Y & PBY-5A & OA-10 REQMT'S. REPLACED -6 WITH -8 ON -2 ASS'Y & ADDED -9 ON -3 ASS'Y	4-11-40	KAYL
F	29W3800 WAS 29P1107 NEXT ASSY.	5-6-40	MKC
G	ADDED NEXT ASSY AQMTS	5-9-40	MKC
H	CREATED -4 ASS'Y. REVISED -3 & -5 ASS'Y	5-10-40	CORRIE
J	CREATED -5 ASS'Y NO WT CHG	5-11-40	CORRIE
K	29P1191-6 WAS 29P1191 NO WT CHG.	5-20-40	SHIRLEY
L	LIMITED - 9 ASSY # 88476 TO MCR 293 NO WT CHG	7-23-40	CORRIE

PB2Y-2

CRANK DASH NO.	L	A
-6	25 5/8	29 3/8
-8	17 5/8	22 5/8
(E) -9	21	26
(H) -10	21	31
(J) -11	17 5/8	29 5/8

C 91876
C88476 TO MCR 293
CONTRACT #77713
(134 SHIPS)

Note: SPECIAL EQUIP. Not included in weight empty of Airplane.

C. 70496

ASSY. DASH NO.	MODEL	NEXT ASSY.	QUAN.
-2	28-5AMC	28P5026	1
-2	28-5MN	28P5026	1
-2	28-5ME	28P5026	1
-2	28-5MC	28P5026	1
-2	28-5MA	28P5026	1
-2	28-5AMM	28P5026	1
-5	PBY-5	28P5026	1
-4	PBY5A	28P5026	1
-3	PBY-5A	28P109	1
-5	PBY5B	28P5026	1
-2	PBY-5	28P5026	1
-0	PB2Y-2	29P1107	2

REQUIREMENTS PER AIRPLANE

REPLACED — GMB. WT.
REPLACED BY — ASY. WT.

SCALE 6" / 6"

STAMP PART NUMBER WHERE SHOWN

PART NO.	STOCK	MATERIAL	SPEC.	-0	-2	-3	-5	-6
				1	1	1	1	1
-11	HAND CRANK	(GOVT. FURNISHED)						
28P109							1	
28P1027							1	
29P1191-6						1		
-10	HAND CRANK	(GOVT. FURNISHED)						
(H) -9	HAND CRANK	(GOV'T. FURNISHED)						
-8	HAND CRANK	(GAV'T. FURNISHED)						
-7	PIN	CRS STEEL	66-S18 Gr B	2	2	2	2	2
-6	HAND CRANK	(GOVT. FURNISHED)						

PARTS LIST PER ASSY.

A'S — MATL. 24ST
MATT — HEAT TREAT 24-40 F-10
FINISH — DRAFT, CHECK, STRESS, ENG., APPD., DR.

NAME CRANK ASSEM. STARTER

CONSOLIDATED AIRCRAFT CORP. San Diego, Calif.

OPT. NAMES

SIZE D — 29P1190

LET	ALTERATION	DATE	BY
K	TRACED. NO WT. CHG.	7-10-43	FLETCHER

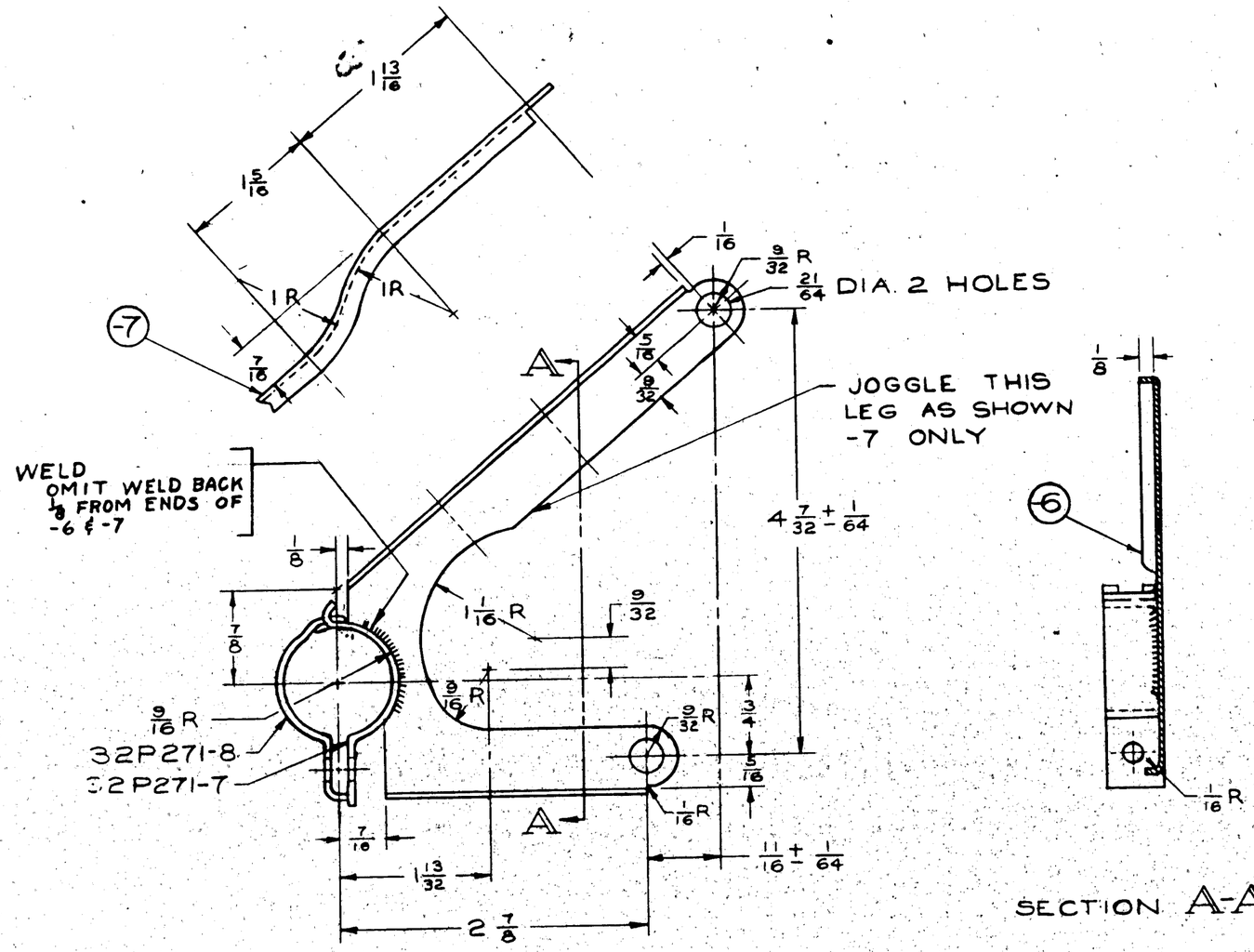

SECTION A-A

NOTE

BEFORE WELDING, ASSEMBLE SO THAT 32P271-7 IS FLUSH WITH BOTTOM OF -6.

C 70496 #1-36 & 37-42

C-70496 #37, 43-167 & C-91876

ASSY. DASH NO.	MODEL	NEXT ASSY.	REQ.
-0	28-5AMC	28P5148	2
	28-5MN		2
	28-5ME		2
	28-5MC		2
	28-5MA		2
	PBY-5	28P5148	2
	28-5AMN	28P5127	2
	PBY-5A		2
	PBY-5B		2
-0	PBY-5	28P5127	2
-2	LB30	32P5025	4
-2	B24A	32P278	4
-2	B24	32P278	4
-0	XB24	32P278	4

REQUIREMENTS PER AIRPLANE

REPLACES 32P272 OF 11-14-39 — CALC. WT.

REPLACED BY — ACT. WT.

UNLESS OTHERWISE SPECIFIED: ± 1/32 & NOTED — SCALE 12"-1'0"

STAMP PART NUMBER WHERE SHOWN

PART No.	STOCK	MATERIAL	SPEC.	LH REQ. -0	RH REQ. -2	LH REQ. -3	RH REQ. -4	LH REQ. -5	RH REQ.
32P272-7	.064 x 4 x 5 1/8	CM. STEEL	AN-QQ-S685						
32P272-8	.064 x 4 x 5 1/8	CM. STEEL	AN-QQ-S685						

PARTS LIST PER ASSY.

AC NORMALIZE	C.A.C. ZF-32-001	11-14-39	FOLLICK	EVW	CASSIE	K.K. Owen	F.W.F.
NAVY		HESS	11-24-39		11-20-39		11-20-39
HEAT TREAT	FINISH	DRAFT	CHECK	STRUCT	MAT	APPROV	ENG.

NAME BRACKET ASSEM. - COOLING TUBE REAR

OPP. HAND

CONSOLIDATED VULTEE AIRCRAFT CORP. SAN DIEGO DIVISION . . SAN DIEGO, CALIF.

SIZE D — DWG. 32P272

R 32P272

LET	ALTERATION	DATE	BY
A	32P278 WAS 32P281 IN B/M		
	ADDED REQMTS FOR B-24A	8-[illegible]-40	[illegible]
	ADDED PBY-5 REQMTS & MATERIAL		
B	CHANGED -7 FROM 61S0 SHT. TO COMM'L. ALUM. RUNNEL	1-4-40	[illegible]
C	REMOVED REQMTS. FOR B-24, B-24A, B-24D	4-24-40	[illegible]
D	CHANGED -7 FROM COMM'L. RUNNEL TO 52S0 SHEET	4-24-40	[illegible]
E	ADDED REQMTS. FOR B-24D-24A	[illegible]	[illegible]
F	-10 WAS -6, -7 BEAD WERE ON OPP. ENDS (-7 WAS L.H., BEAD WAS R.H.) LOCATING DIM. REVERSED TO SUIT 28P5148 WAS 32P278, IN REQMTS BL'K.	1-23-42	[illegible]
G	ADDED LIMIT "TO MCR 289 FOR PBY-5A, 28P5127 [illegible]	[illegible]	[illegible]

E.O. 19994
E.O. A16721

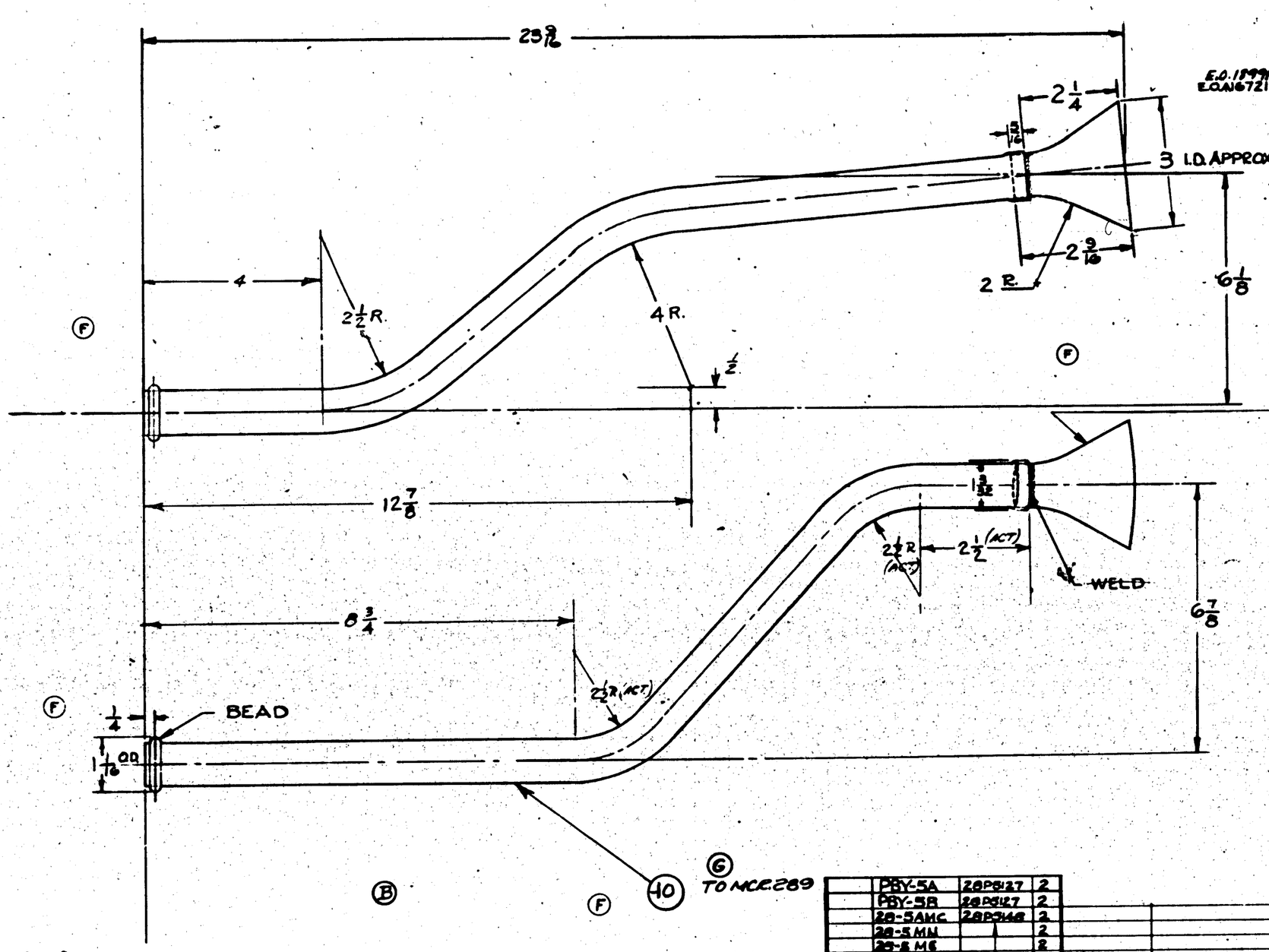

	PBY-5A	28P5127	2
	PBY-5B	28P5127	2
	28-5AMC	28P5148	2
	28-5MN		2
	28-5ME		2
	28-5MC		2
	28-5MA		2
	PBY-5	28P5148	2
-7	B-30	32P421	4
-7	B-24A	32P421	4
-7	B-24	32P421	4
	PBY-5B	28P5127	2
ASSY. DASH NO.	MODEL	NEXT ASSY.	REQ.

"1 to 36-38 to 42

E

"37 & 43 & ON

REQUIREMENTS PER AIRPLANE

REPLACES

REPLACED BY

GALS WT.

ASY. WT.

LIST OF SUBASSEMBLIES AND MAJOR DETAILS ON THIS DRAWING: + 132

SCALE 6"=1'-0"

STAMP PART NUMBER WHERE SHOWN

PART NO.	STOCK	MATERIAL	SPEC.	LH REQ.	RH REQ.	LH REQ.	RH REQ.	LH REQ.	RH REQ.	LH REQ.	RH REQ.	LH REQ.	RH REQ.
-10	I.D. R.K. .049 x 26	52S0AL ALCLAD 24ST42 TEMP'R											
32P281-7	.051 R 4 X 12	52S0AL ALCLAD 24ST42 TEMP'R											
PARTS LIST PER ASSY.				-0	-2	-3	-4	-5	-6	-7	-8	-9	-10

AC NONE

NAVY

HEAT TREAT

C.R.S. 11-12-42

FINISH

DRAFT | CHECK | CONTRACT | MAT. | APPROV. | STRESS

NAME TUBE ASSEM. ENGINE COMPARTMENT COOLING FRONT

CONSOLIDATED AIRCRAFT CORP. SAN DIEGO, CALIF.

OPP. HAND

SIZE D

32P281

SUPPLIES & EQUIPMENT CLASSIFICATION			
LET	ALTERATION	DATE	BY
C	TRACED & SIZE CHG'D. FROM B TO D	8-5-41	[illegible]

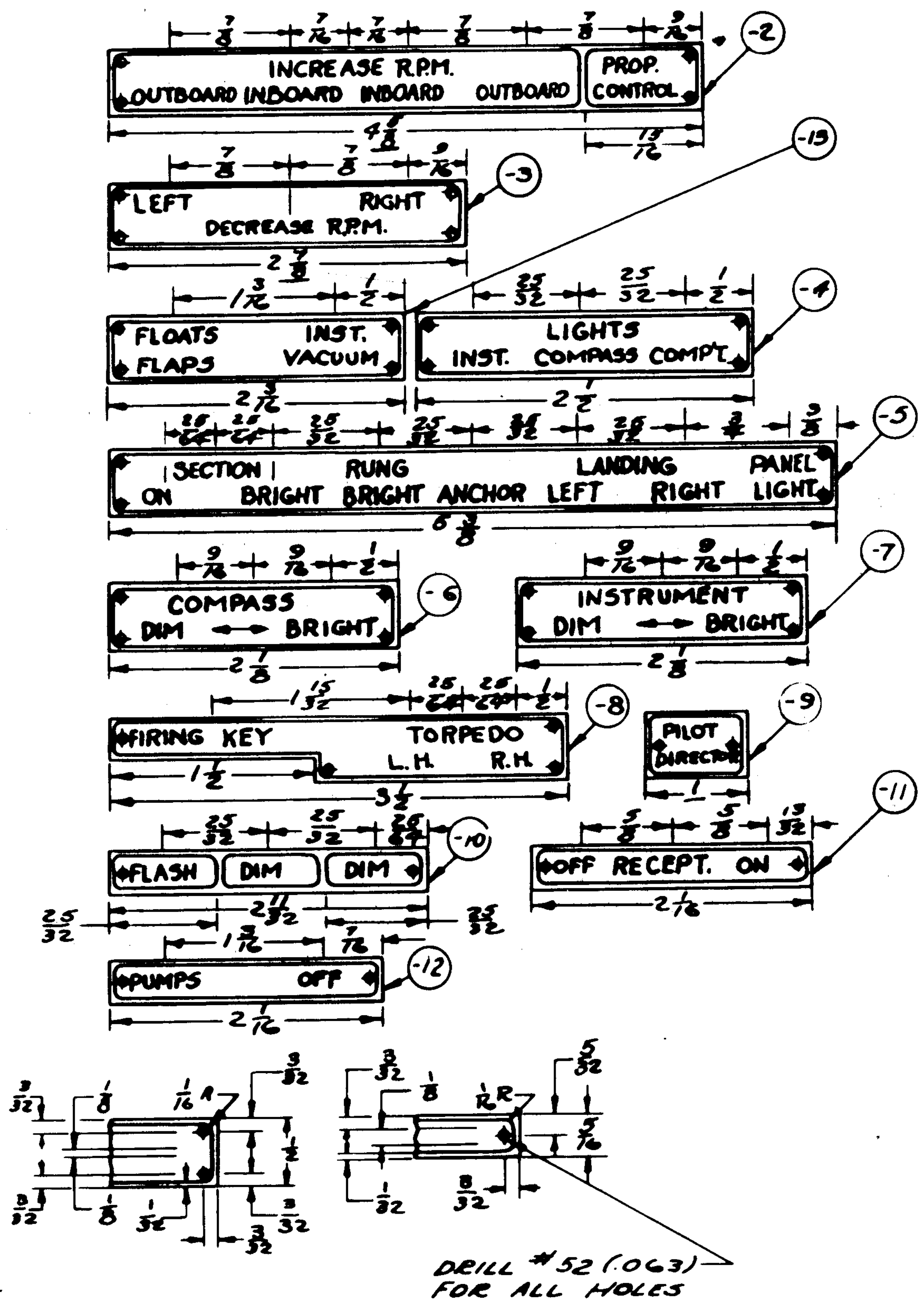

TYPICAL DIMENSIONS

NOTE:

LETTERS & EDGING RAISED & POLISHED, BACKGROUND ETCHED & FINISHED WITH DULL BLACK LACQUER.

DIMENSIONS ABOVE NAMEPLATES INDICATE LOCATIONS OF APPROXIMATE CENTERS OF WORDS OR WORD GROUPS.

#H & ON
#1-10

O. H.	MODEL	NEXT ASSY.	REQ.
-11	PBY-5A	28E5768	1
-11	PBY-5A	28E4001	1
-11	PBY-5	28E4001	1
-2 To -13	XPB2Y-1	29E030	1 EA.

REQUIREMENTS PER AIRPLANE A.F.C. MAT. PARTS LIST PER ASSY.

REPLACES — APPROVED: LCW — DATE
REPLACED BY — CALC. WT.: .05 3H.A 3-30-37 — ACT. WT.
LIMIT ON DIMENSIONS UNLESS OTHERWISE SPECIFIED: .010 — SCALE: 12" = 1'-0"

MATERIAL	SPEC.	HEAT TREAT	FINISH
NAVY .032 AL. 3HX	47A2 HH	NONE	NOTED

DRAFT	CHECK	EXAM.	ENG.
[illegible] 3-25-37	[illegible] 3-25-37	[illegible]	[illegible]

CONSOLIDATED AIRCRAFT CORP. SAN DIEGO, CALIF.

STAMP PT. NO. WHERE SHOWN

NAME: NAMEPLATES - ELEC. - PILOTS CONTROL PEDESTAL PANEL

OPP. HAND

DWG. SIZE D — Q3526

SUPPLIES & EQUIPMENT CLASSIFICATION			
LET	ALTERATION	DATE	
A	ADDED M STAMP NO. 28F001	2-24-37	L.H.F.
B	ADDED DIAGRAM 28R1066	"	L.H.F.

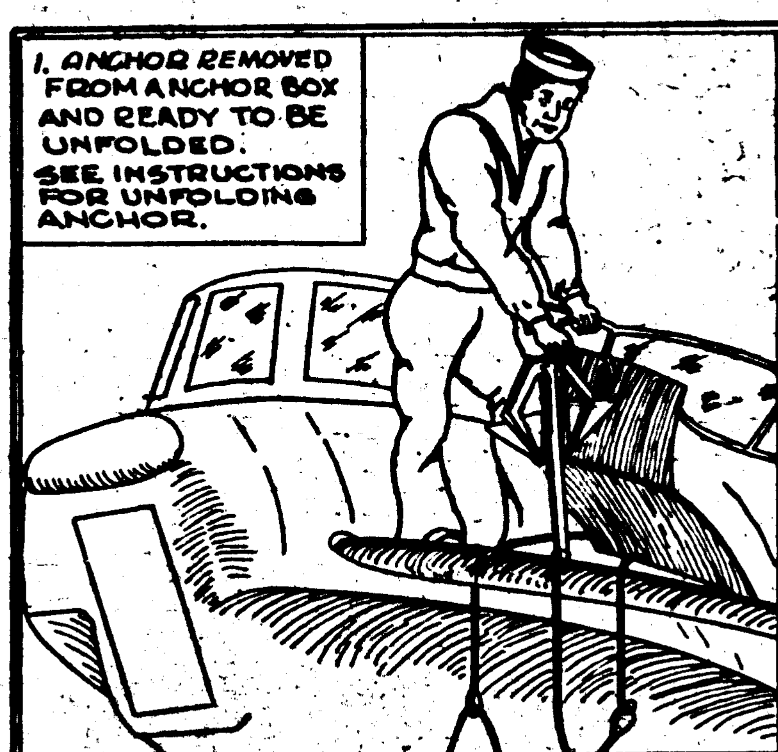

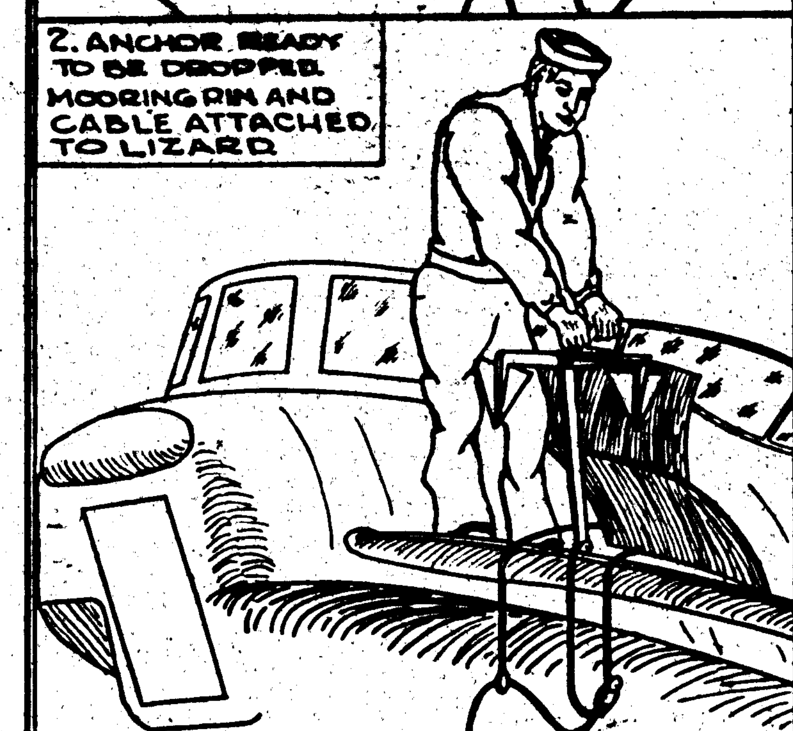

TO CAST OUT ANCHOR, PROCEED IN THE FOLLOWING MANNER.

1ST. OPEN DOOR OF ANCHOR BOX AND LATCH IN UP POSITION.

2ND. HOOK SAFETY BELT IN FORWARD SNAP, FACING AFT.

3RD. TAKE OUT ANCHOR. SET IT UP SIDE DOWN ON WALK RAIL IN HAND HOLE SLOT.

4TH. UNFOLD ANCHOR IN UPSIDE DOWN POSITION & LOCK.

5TH. PLACE ANCHOR CABLE IN GUIDE EYE IN WALK RAIL.

6TH. DROP ANCHOR OVERSIDE. (ONE MAN MUST BE INSIDE)

7TH. LET OUT CABLE TO DESIRED LENGTH, THEN ENGAGE LOCK AT DRUM. SECURE ANCHOR CLAMP TO CABLE.

TO HOIST ANCHOR ABOARD. PROCEED IN THE FOLLOWING MANNER.

1ST. REEL IN ANCHOR UNTIL CLAMP CAN BE REMOVED.

2ND. STOW ANCHOR CLAMP AND LIZARD. (SEE FIGURE 4)

3RD. REEL IN ANCHOR UNTIL TOP OF ANCHOR IS LEVEL WITH THE WATER.

4TH. USE SAFETY BELT IN SAME POSITION AS BEFORE.

5TH. REACH BELOW WALK RAIL AND DISENGAGE CABLE FROM GUIDE EYE.

6TH. SET ANCHOR IN UPSIDE DOWN POSITION ON WALK RAIL.

7TH. UNLOCK AND FOLD ANCHOR.

8TH. STOW ANCHOR IN ANCHOR BOX, WITH CABLE END OF SHANK POINTING FORWARD.

9TH. CLOSE DOOR OF ANCHOR BOX AFTER MOORING CABLE AND ANCHOR CLAMP ARE SECURED IN ANCHOR BOX.

A. INSTRUCTIONS FOR FOLDING AND UNFOLDING ANCHOR.

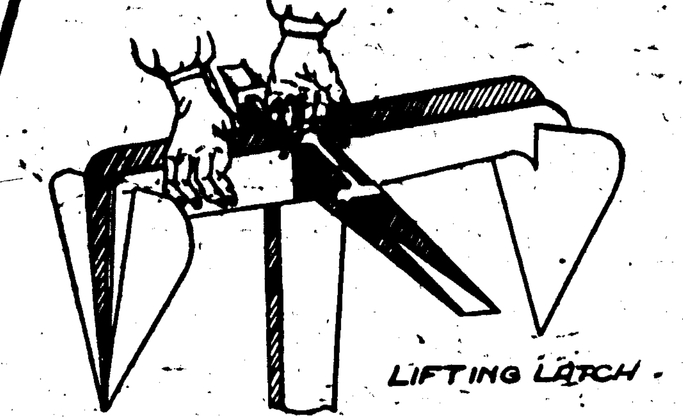

B.

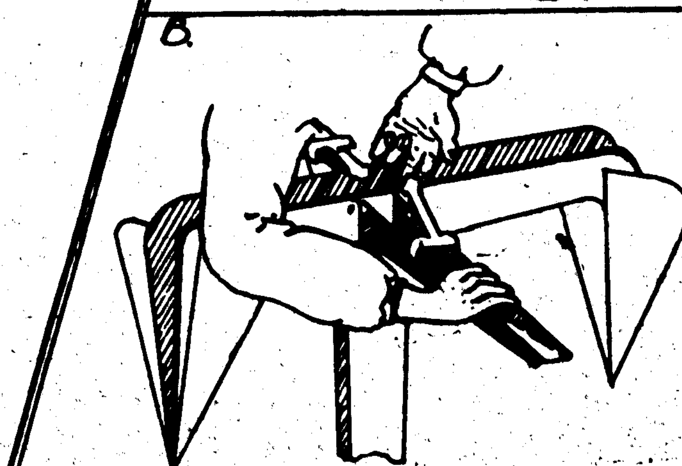

TO FOLD ANCHOR
ANCHOR TO BE IN UPSIDE DOWN POSITION.
1. PLACE RIGHT HAND AT BASE OF ANCHOR.
2. LIFT LATCH WITH LEFT HAND AND FOLD DOWN SCANTLINGS. (SEE "A" "B" "C")
3. FOLD DOWN FLUKES. (SEE "D")

D.

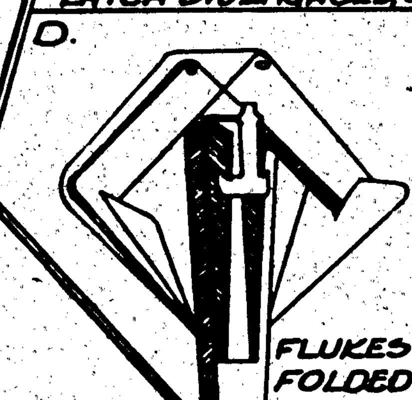

C.

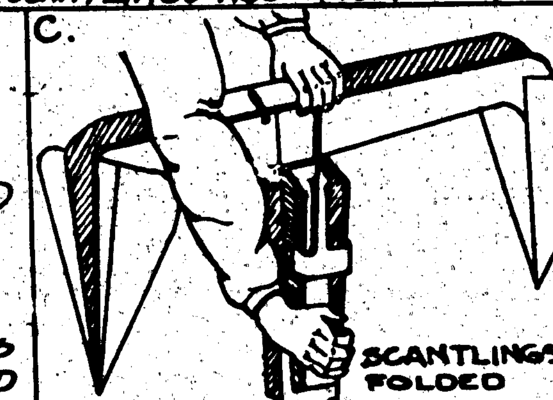

TO UNFOLD ANCHOR.
1. HOLD ANCHOR IN UPSIDE DOWN POSITION, WITH BASE OF SHANK IN HAND HOLE IN RAIL.
2. PULL UP FLUKES.
3. PULL UP SCANTLINGS UNTIL CATCH ENGAGES.

CUTOUT ALONG THIS LINE

FIG. 4

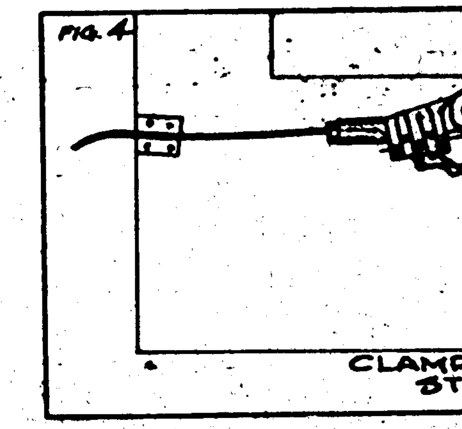

CUTOUT ON THIS LINE

NOTE - BLUE PRINTS OF INSTRUCTION SHEETS TO BE PASTED INSIDE OF DOOR AS SHOWN, THEN APPLY TWO COATS OF CLEAR VARNISH.

ANCHOR BOX DOOR OPEN

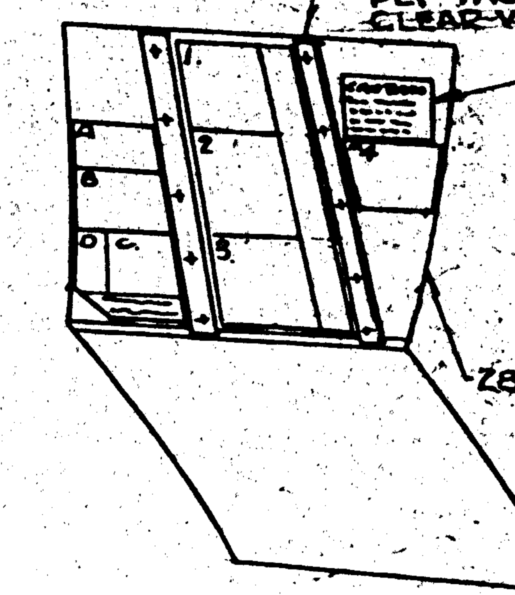

	PBY-4	28F1001						
	PBY-3	28F1001				(B) 28R1066	1	—
	PBY-2	28F1001						
(B)	PBY-1	28F1001						
O.H.	MODEL	NEXT ASSY.	REQ.	ST'D PARTS	REQ. (LH / RH)	PART NO.	REQ. (LH / RH)	

REPLACES	
REPLACED BY	
LIMIT ON DIMENSIONS UNLESS OTHERWISE SPECIFIED	+ −
[redacted]	

APPROVED: LCW 9-24-36 DATE

CALC.WT.	ACT.WT.
SCALE	
AC	
NAVY	BLUEPRINT PAPER
MATERIAL	

REQUIREMENTS PER AIRPLANE — MAT. — PARTS LIST PER ASSY.

SPEC. — HEAT TREAT — FINISH — DRAFT: Kessler 9-23-36 — CHECK — EXAM. — ENG.

CONSOLIDATED AIRCRAFT CORP. BUFFALO, N.Y.

NAME: INSTRUCTION SHEET — ANCHOR HOISTING & STOWAGE

OPP. HAND

SIZE D — 28R1058

SULLIVAN-McKEEGAN CO., INC. BUFFALO — IMPERIAL TRACING CLOTH

(B)

EQA-27619 θ

LET	ALTERATION	DATE	BY
A	ADDED NOTE #23	3-6-40	[illegible]
B	22° WAS 23° IN NOTE #1. 3° & 22° WERE 5° & 20° RESPECT. IN NOTE #2. NO WT. CHG.	8-13-40	[illegible]

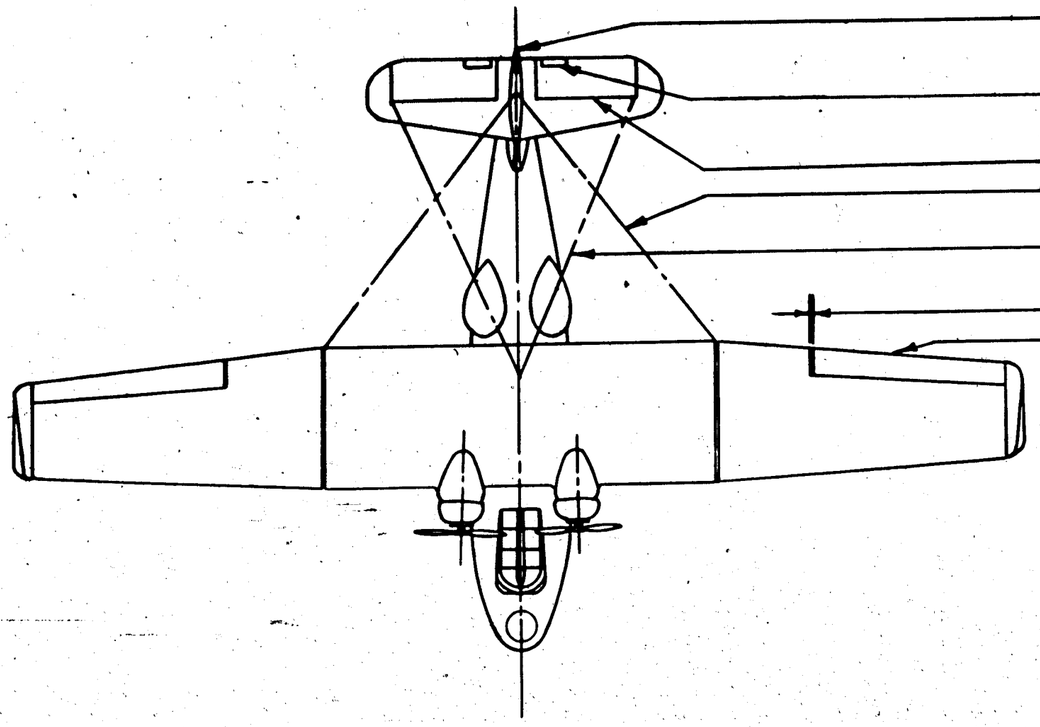

1. RUDDER TRAVEL 22° EACH SIDE OF NEUTRAL.
2. 3° CLEARANCE BEYOND 22° OF MOVEMENT
3. TOLERANCE $^{+3}_{-0}$° SEE NOTE.
4. ELEVATOR TAB TRAVEL 5° UP AND 10° DOWN
5. TOLERANCE ±1° SEE NOTE.
6. ELEVATOR-STABILIZER HINGE GAP FAIRING CLEARANCE = $\frac{1}{8}$"
7. TRAMLINE VARIATION-LOWER OUTBOARD CORNER OF CENTER PANEL TO RUDDER INTERMEDIATE HINGE BEARING = $\pm\frac{1}{2}$"
8. TRAMLINE VARIATION-ELEVATOR HINGE SUPPORT BOLT TO AFT WING ATTACHMENT BOLT = $\pm\frac{1}{2}$"
9. AILERON-TRAILING EDGE CLEARANCE = $\frac{1}{8}$" MIN.
10. AILERON TRAVEL 21° UP - 19$\frac{3}{4}$° DOWN.
11. TOLERANCE ±1$\frac{1}{2}$° SEE NOTE

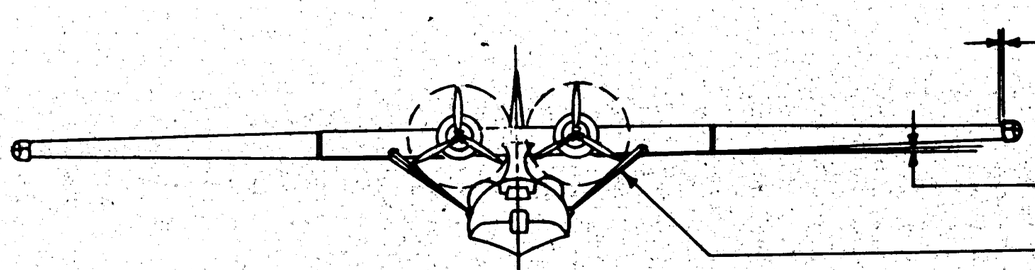

12. FLOAT-WING TIP CLEARANCE - MIN. - $\frac{1}{16}$" IN VICINITY OF SPARS BETWEEN SPARS AND LEADING AND TRAILING EDGE $\frac{1}{8}$" MIN.
13. PERMISSABLE VARIATION IN CENTER PANEL LEVEL - SPLICE TO SPLICE $\frac{1}{2}$" MAX.
14. STRUT LENGTH TOLERANCE ±$\frac{1}{32}$"

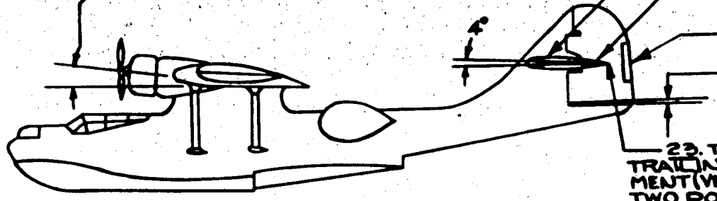

15. TOLERANCE - INCIDENCE ANGLE WING = ±$\frac{1}{2}$° (ANGLE OF INCIDENCE = 6° (REF))
16. RIG STABILIZER FIN ASS'Y. AT 4° POSITIVE INCIDENCE - TOLERANCE ±$\frac{1}{2}$°.
17. STABILIZER HORIZONTAL IN FRONT ELEVATION - TOLERANCE ±$\frac{3}{4}$" AT STAB. TIP.
18. ELEVATOR TRAVEL 30° UP - 20° DOWN
19. TOLERANCE ±1$\frac{1}{2}$° - SEE NOTE.
20. RUDDER TAB TRAVEL 15° EACH SIDE OF NEUTRAL.
21. TOLERANCE ±1° - SEE NOTE.
22. MINIMUM RUDDER - TAILCONE CLEARANCE = $\frac{3}{4}$".
23. TOTAL ALLOWABLE TRAILING EDGE MISALIGNMENT (VERTICAL) BETWEEN ANY TWO POINTS ONE POINT ON EACH ELEVATOR SHALL NOT EXCEED $\frac{5}{8}$" (A)

NOTE: #1, 2, 3, 4, 5, 10, 11, 18, 19, 20, 21, REFER TO 28C5000

#1, 2, 3 REFER TO 28T5001

#6 REFERS TO 28T2044

#16 REFERS TO 28T5004

STOPS ON COCKPIT CONTROLS OF ELEVATOR MUST ENGAGE AFTER SURFACE STOPS ENGAGE.

ASSY. DASH No.	MODEL	NEXT ASSY.
	PBY-5A	28Z1025
	ALL 28-5's	28Z1025
	PBY-5	28Z1025

REQUIREMENTS PER AIRPLANE

REPLACES — CALC. WT.

REPLACED BY — ACT. WT.

SCALE 1" = 12" - 0"

STAMP PART NUMBER WHERE SHOWN

PART No.	STOCK	MATERIAL	SPEC.	LH REQ. -0	RH REQ. -2	LH REQ. -3	RH REQ. -4	LH REQ. -5	RH REQ.

PARTS LIST PER ASSY.

AC — NAVY — HEAT TREAT — FINISH — CHERRY — 8-12-40 DRAFT — C.W. — STUCK — GREEN — CHECK — STRUCT. — C.S. — H.P.Z. — 8-14-40 MAT — 8-14-40 ACCEPT. — R — GVT

NAME RIGGING INFORMATION

CONSOLIDATED AIRCRAFT CORP. SAN DIEGO, CALIF.

OPP. HAND

SIZE D — 28R2044

R

LET	ALTERATION	DATE	BY

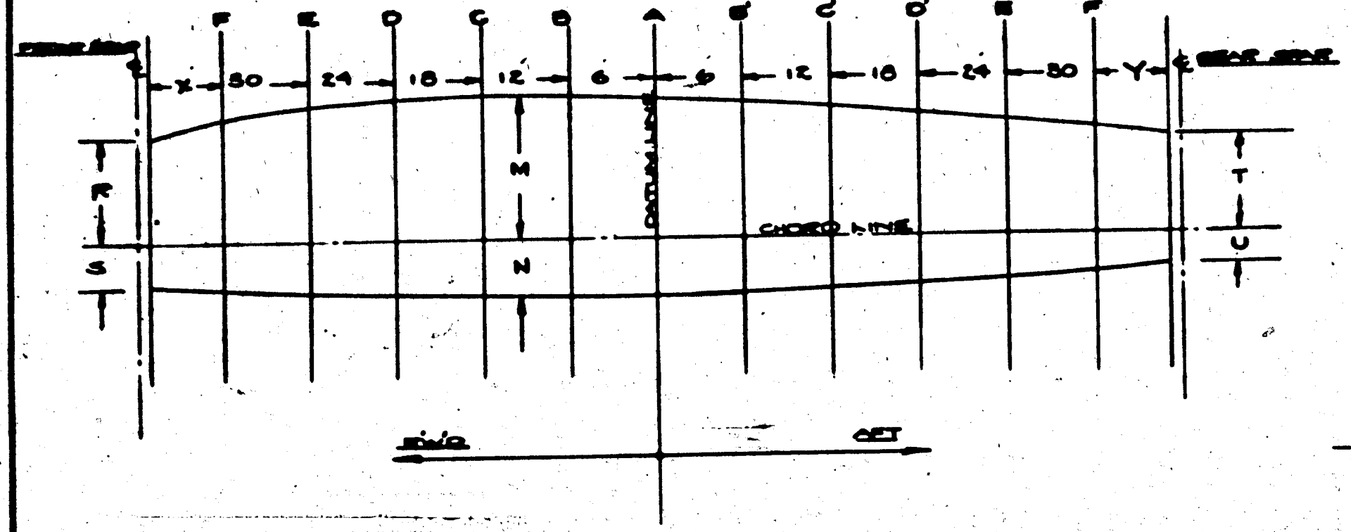

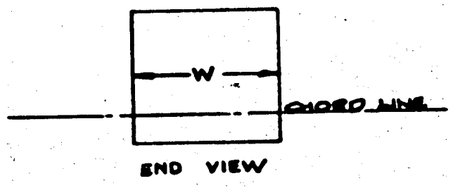

CELL NO			STATION F	E	D	C	B	A	B'	C'	D'	E'	F'
1	INBOARD SIDE	M	14 23/64	15 3/16	15 21/64	15 7/8	15 15/16	15 23/64	15 5/8	15 1/2	14 27/32	14 5/16	13 11/16
		N	5 57/64	6 1/32	6 9/64	6 5/16	6 3/64	6 11/32	6 11/32	6 9/32	6 1/8	5 15/16	5 11/16
1	OUTBOARD SIDE												
2, 3 & 4	INBOARD SIDE	M	14 25/64	15 7/16	15 27/64	16 1/8	16 11/64	16 1/16	15 29/64	15 33/64	15 5/8	14 3/16	13 23/64
	OUTBOARD SIDE	N	6 3/32	6 13/64	6 13/32	6 1/2	6 9/64	6 5/32	6 9/32	6 17/32	6 25/64	6 13/64	5 61/64
5	INBOARD SIDE												
5	OUTBOARD SIDE	M	14 23/64	15 3/16	15 21/64	15 7/8	15 15/16	15 29/64	15 5/8	15 1/2	14 27/32	14 5/16	13 11/16
		N	5 57/64	6 1/32	6 3/64	6 5/16	6 3/64	6 11/32	6 11/32	6 9/32	6 1/8	5 15/16	5 11/16

CELL NO			X	Y	CELL NO.			R	S	T	U
1	INBOARD SIDE		5 7/16	5 5/8	1	INBOARD SIDE		13 5/8	5 7/16	13	5 11/64
			5 1/8	4 29/64							
1	OUTBOARD SIDE		5 7/16	5 5/8	1	OUTBOARD SIDE		13 51/64	5 29/64	13 13/64	5 11/16
2 & 3	INBOARD SIDE		5 7/16	5 5/8	2 & 3	INBOARD SIDE		13 51/64	5 29/64	13 17/64	5 25/64
	OUTBOARD SIDE					OUTBOARD SIDE					
4	INBOARD SIDE		5 11/32	5 5/8	4	INBOARD SIDE		13 13/16	5 29/64	13 17/64	5 25/64
	OUTBOARD SIDE					OUTBOARD SIDE					
5	INBOARD SIDE		5 9/16	5 5/8	5	INBOARD SIDE		13 25/32	5 29/64	13 17/64	5 25/64
5	OUTBOARD SIDE		5 9/16	5 5/8	5	OUTBOARD SIDE		13 25/32	5 1/2	13 1/32	5 27/64

CELL NO	W
1	24 13/64
2	18 27/32
3	19 3/4
4	25 13/32
5	12 25/64

NOTE:-

DIMENSIONS ARE IN INCHES TO THE OUTSIDE SURFACES OF CELLS.

ASSY. SASH NO.	MODEL	NEXT ASSY.	REQ.
	PBY-5A 28-5ME	NO. NECESSARY	

REQUIREMENTS PER AIRPLANE

REPLACES — CHG. NO.

REPLACED BY — ADV. NO.

LIST OF EXCEPTIONS UNLESS OTHERWISE SPECIFIED

SCALE NONE

STAMP PART NUMBER WITHOUT SYMBOL

-4

PART NO.	STOCK	MATERIAL	SPEC.	LH REQ.	RH REQ.	LH REQ.	RH REQ.	LH REQ.	RH REQ.	LH REQ.	RH REQ.	LH REQ.	RH REQ.
PARTS LIST PER ASSY.				-0		-2		-3		-4		-5	

AC —— NAVY —— HEAT TREAT —— FINISH ——

DESIGN — DRAFT — CHECK — STRUCT. — MAT — APPROV. — ENG

NAME ORDINATES ~ CELL SELF SEALING ~ WING

OPP. HAND ——

CONSOLIDATED AIRCRAFT CORP. SAN DIEGO, CALIF.

SIZE D

DWG. 28R5060

R

LET	ALTERATION	DATE	BY
A	REMOVED WIDTH TABULATIO	11-6-41	KAMM

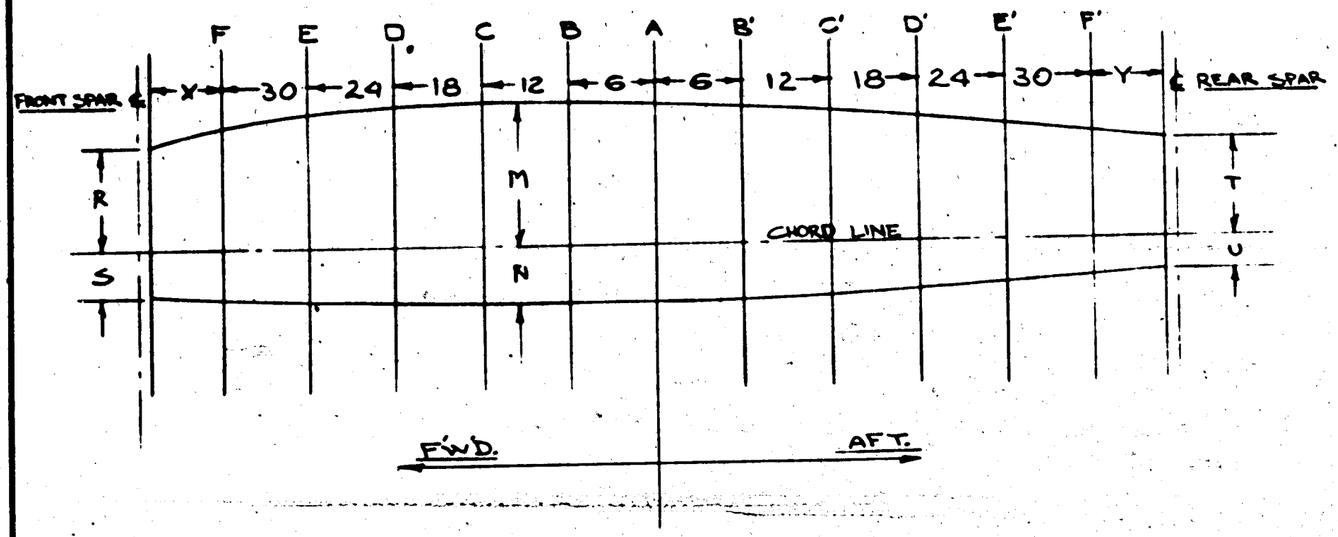

CELL NO.			STATION F	E	D	C	B	A	B'	C'	D'	E'	F'
1	INBOARD SIDE	M	14 37/64	15 5/16	15 49/64	16	16 1/16	15 61/64	15 3/4	15 27/64	14 31/32	14 7/16	13 13/16
		N	6 1/64	6 5/32	6 17/64	6 23/64	6 27/64	6 15/32	6 15/32	6 13/32	6 1/4	6 1/16	5 13/16
1	OUTBOARD SIDE												
2,3 & 4	INBOARD & OUTBOARD SIDE	M	14 27/64	15 7/16	16 1/64	16 1/4	16 17/64	16 3/16	15 61/64	15 21/64	15 13/64	14 11/16	14 3/64
		N	6 7/32	6 27/64	6 17/32	6 5/8	6 11/16	6 3/4	6 47/64	6 21/32	6 33/64	6 21/64	6 5/64
5	OUTBOARD INBOARD SIDE												
5	OUTBOARD SIDE	M	14 37/64	15 5/16	15 49/64	16	16 1/16	15 61/64	15 3/4	15 27/64	14 31/32	14 7/16	13 13/16
		N	6 1/64	6 5/32	6 17/64	6 23/64	6 27/64	6 15/32	6 15/32	6 13/32	6 1/4	6 1/16	5 13/16

CELL NO.			X	Y
1	INBOARD SIDE	UPPER CORNER	5 9/16	5 3/4
		LOWER CORNER	5 1/4	5 3/64
1	OUTBOARD SIDE		5 7/16	5 3/4
2 & 3	INBOARD & OUTBOARD SIDE		5 9/16	5 1/2
4	INBOARD & OUTBOARD SIDE		5 15/32	5 1/2
5	INBOARD SIDE		5 11/16	5 1/2
5	OUTBOARD SIDE		5 11/16	5 1/2

CELL NO.		R	S	T	U
1	INBOARD SIDE	13 47/64	5 9/16	13 1/8	5 55/64
1	OUTBOARD SIDE	13 29/32	6 3/64	13 23/64	5 13/16
2 & 3	INBOARD & OUTBOARD SIDE	13 29/32	6 3/64	13 25/64	5 53/64
4	INBOARD & OUTBOARD SIDE	13 29/32	6 3/64	13 25/64	5 53/64
5	INBOARD SIDE	13 57/64	6 3/64	13 25/64	5 53/64
5	OUTBOARD SIDE	13 23/32	5 27/32	13 5/32	5 35/64

CELL NO.	PART NO.'S
* 1	28G5105 L & R
* 2	28G5106 L & R
* 3	28G5107 L & R
* 4	28G5108 L & R
* 5	28G5109 L & R

NOTE :-
DIMENSIONS ARE IN INCHES TO THE OUTSIDE SURFACES OF CELLS.

PURCHASE TO DWG

28-5AHN

PBY-5

S.O. 980-45-1

CONTR: 7646

PART NO.	STOCK	MATERIAL	SPEC.	LH REQ. -0	RH REQ. -2	LH REQ. -3	RH REQ. -4	LH REQ. -5	RH REQ.

PARTS LIST PER ASSY.

ASSY. DASH No.	MODEL	NEXT ASSY.	REQ.
-6			

REQUIREMENTS PER AIRPLANE

REPLACES — Calc. Wt.

REPLACED BY — Act. Wt.

SCALE NONE

STAMP PART NUMBER WHERE SHOWN

AC —
NAVY —
HEAT TREAT | FINISH

	DRAWN	CHECK	STRUCT.	MAT	APPROV	DRG.
	2-26-41	2-26-41				

NAME ORDINATES - CELL - SELF SEALING - WING

OPP. HAND — R

CONSOLIDATED AIRCRAFT CORP. San Diego, Calif.

DWG. D SIZE

28R5070

R

SUPPLIES & EQUIPMENT CLASSIFICATION			
LET	ALTERATION	DATE	BY
L	TRACED	8-22-37	[illegible]
M	CHANGED ½ FLANGE WIDTH TO 5/8	8-28-37	[illegible]
N	ADDED -10 & -11 ASSEM. & -12, -13, -14 & -15	"	"
O	CHANGED BONDING DETAILS ADDED SECTION A-A	"	"
P	CHANGED Q506-A2-2 BRAND TO Q506-A2-5 (FOR PBY-1,2,3 ONLY)	6-9-38	[illegible]
Q	CHANGED Q506-A2-2 BRAND TO Q507-A2-5 RUBBER COVERED BRAND (FOR PBY-4 ONLY)	"	"

BEND RADIUS IN SIDE

STRAIGHT TAPER

PRICK PUNCH - 2 PLACES AS SHOWN DRILL AT ASSEM. FOR AN442D6

(P) (FOR PBY-4) (FOR PBY-1,2,3) Q507-A2-5 Q506-A-2-5 (REF)

2- AN960-A6 SCREW (REF)

LOCKWASHER (REF)

(O) SECTION A-A

AN442D4

SEQ. SPACES

DRILL #28 (.1405) THRU AFTER FINISHING

2BT1016

(-6) PRESS FIT BRENNER 31K-5 BALL BEARING AS SHOWN--STAKE LIGHTLY 3 PLACES EACH SIDE - USE RD. NOSE

NOTE - "*" DRILL #5 (.125) HOLES & ATTACH WITH SCREWS UNTIL ASSY. ON STABILIZER

(-3) RH OPP

(-2) LH SHOWN

(-4) LH SHOWN

(-5) RH OPP

SEE NOTE BELOW

2.27 R.

3" DIA.

3" DIA. LIGHTENING HOLE PER 3M003-12 IN -2, -3, -4, & -5

CORNER RELIEF HOLE

13 5/16

AN442D6 2 REQ. OMIT UNTIL ASSY. ON STABILIZER

DRILL #31 (.120) 1 HOLE #6 SELF TAPPING SCREW (SHAKEPROOF LOCKWASHER CO) #1106 SHAKEPROOF LOCKWASHER Q506A-2-2 ASSEMBLE ON INBOARD SIDE

AN425D6 (CSK BOTH SIDES) 4 REQ. OMIT UNTIL ASSY ON STABILIZER

(N) FOR PBY-1, PBY-2, & PBY-3 #1 USE 2BT015 L.H. 2BT015-1 R.H. } WITH LIGHTENING HOLE
FOR PBY-3 #2 ON & PBY-4 USE 2BT015-10 L.H. 2BT015-11 R.H. } WITHOUT LIGHTENING HOLE

(N) NOTES

-12, -13, -14 & -15 ARE IDENTICAL TO -2, -3, -4, & -5 RESPECTIVELY EXCEPT THAT 3 DIA. HOLE IS OMITTED.

FINISH SHEETS 2 & P AFTER FORMING
FINISH ASSY 2 [illegible] GP
L.H. SHOWN -- R.H. OPPOSITE

GP-GREEN PRIME

FINISH CODE	
Z	ANODIC [illegible]
P	P 27 PRIMER
AP	ALUMINIZED PRIMER
C	CADMIUM [illegible]

-11	PBY-5	28T2029	1
-10	PBY-5	28T2029	1
QH	MODEL	NEXT ASSY	REQ
REQ. FOR AIRPLANE			

									FOR PBY-4 ONLY	FOR PBY-1,2,3 ONLY
									2BT1016	1	1
Q507-A2-5	1	1							Q506A-2-5	1	1
									2BT1015	1	1
									2BT1015-1	1	1
									2BT1015-6	1	1
			AN960-A6	2	2			-15		1
			AN425D6	4	4			-14	1	
			AN442D4	14	14			-13		1
			AN442D6	2	2	2BT1015-5			1	
					-10	-11	ASSEM.			-10	-11
							[illegible]			1	1
							Q506A-2-2			1	1
							2BT-016			1	1
							[illegible]			1	1
							2BT-016C-6			1	1
-11	PBY-4	2BT2029									
-10	PBY-4	2BT2029									
-11	PBY-3	2BT-2029	1								
-10	PBY-3	2BT-2029	1								
-1	PBY-2	2BT-2029	1								
	PBY-2	2BT-2029	1								
-1	PBY-1	2BT-1003	1	AN960-A6	2	2		-5	1		1
	PBY-1	2BT-1003	1	AN425D6	4	4		-4	1		
-1	XPBY-1	2BT-002	1	AN442D4	14	14		-3		1	
	XPBY-1	2BT-002	1	AN442D6	2	2	2BT-015-2		1		
					LH	RH			LH	RH	
				STD PARTS	REQ.		PART NO.		REQ.		

REPLACES					
REPLACED BY					
LIMIT ON DIMENSIONS UNLESS OTHERWISE SPECIFIED	± .005 & ± 1°	APPROVED	3-24-38 DATE		
		CALC. WT.	ACT. WT.	O.H.	MODEL
		SCALE 12" = 1'-0"		REQUIREMENTS PER AIRPLANE	
		AC			
		NAVY	NOTED	NOTED	NOTED
		MATERIAL		SPEC.	HEAT TREAT

NEXT ASSY.	REQ.	STD PARTS	MAT.
			NOTED
			FINISH

PARTS LIST PER ASSY.

		4-28-37	
DRAFT	CHECK	EXAM.	ENG.

ALL SH. ALLOY SHEET SPEC. 47A10 (CONDITION T) ALLOY 24T EXCEPT AS NOTED
ALL BL. ALLOY EXTRUSION SPEC. (CONDITION T) ALLOY 24T EXCEPT AS NOTED
HEAT TREAT ALL CONDITION & MATERIAL PER SPEC. 3A53
RIVETS AL. ALLOY EXCEPT AS NOTED

CONSOLIDATED AIRCRAFT CORP. BUFFALO, N.Y.

STAMP PT. No. WHERE SHOWN

NAME HINGE BRACKET INTERMED-STAB & FIN STRUCT

OPP. HAND 28T-015-1

SIZE D

DWG. 28-T-015

SULLIVAN-GRIGGS CO., INC. BUFFALO
INDUSTRIAL TRACING CLOTH

SUPPLIES & EQUIPMENT CLASSIFICATION			
LET	ALTERATION	DATE	BY
B	TRACED	7-22-37	B.M.C.
C	TRIMMED -4 1/16" & -3 3"	11-8-40	SINGER
	CHANGED DIM 14 1/8 WAS 14 3/16		
D	CHG'D. MAT. NOTES -3 & -4 TO 24 ST AL. ALLOY. SPEC 44T28 COND. T (WAS 17 ST.) (WT. CHG. NEG.)	8-30-42	WHITE
	ADDED FINISH NOTE: TUBING & TUBING SHIELDED. (WAS FINISH TUBING EXTERNALLY ZAKV.)		
E	ADDED "MAX. RADIUS 1/16" TO -3 & -4 NO WT CHG	1-1-43	CURRAN
F	DIM. 14 3/8 WAS 14 1/8 NO WT CHG	5-5-43	CARTER

PBY-5 E.O. 1421-A (Navy Dept.)

PRESS FIT RAFNUT JIK-5 (2) BALL BEARING AS SHOWN

STAKE EACH SIDE (3 PLACES) LIGHTLY - USE END. NOSE PUNCH

E.O. A63874 COLUMBIA E.O.A 1187

(D) (-3) 1 1/2 x 1/2 x .078 RECTANGULAR TUBING (AL. CO. of AMERICA) 24 ST. ALUMINUM ALLOY. SPEC.- 44T28 COND. T. MAX. INSIDE CORNER RADIUS 1/16

1/2 (REF)

3/32 R.

3/32 © 3/32

20 1/16

© 14 3/8 (F)

19 7/8

13 17/64

4°

BIVET AC4-5D-5, DURAL C'SINK BOTH SIDES FLUSH

17/32

9/32

1/2

9/32

A

A

1 1/16

4 1/8 © 1/16

1 7/32

1 1/16

7/32 R

13 1/32

(D) (-4) 1 1/2 x 1/2 x .078 RECTANGULAR TUBING (AL. CO. of AMERICA) 24 ST AL ALLOY. SPEC. 44T28 COND. T. MAX INSIDE CORNER RADIUS 1/16

1/16 REF

.625 (REF)

1/16

SECTION A-A

28T1048

(D) NOTE: FINISH TUBING INTERNALLY & EXTERNALLY Z-P-GP BEFORE ASSY. FINISH GP AFTER ASSY. WITH BEARING SHIELDED. GP-GREEN PRIME

																LH REQ.	RH REQ.
28-5AMC	28T5004	1															
28-5AMN	28T5004	1															
PBY-5B	28T5004	1															
28-5MN	28T5004	1													28T1048	1	
28-5ME	28T5004	1															
28-5AMMN	28T5004	1 EA.															
PBY-5A5A	28T5004	1 EA.															
PBY-4	28T1002																
PBY-3	28T1002														-4	1	
PBY-2	28T1002														-3	1	
PBY-1	28T1002														28T1043-2	1	

REPLACES	APPROVED 7-22-37 DATE	O.H.	MODEL	NEXT ASSY.	REQ.	ST'D PARTS	PART NO.	LH REQ.	RH REQ.
REPLACED BY	CALC. WT. ACT. WT.	REQUIREMENTS PER AIRPLANE				MAT.	PARTS LIST PER ASSY.		
LIMIT ON DIMENSIONS UNLESS OTHERWISE SPECIFIED ±	SCALE 6"=1'-0"								
[redacted]	AC								
	NAVY NOTED	NOTED	NONE		NOTED		T.P.R. [redacted] Green		
	MATERIAL	SPEC.	HEAT TREAT		FINISH		7-22-37 7-26-37 7-28-37		
							DRAFT CHECK EXAM. ENG.		

CONSOLIDATED AIRCRAFT CORP. BUFFALO, N. Y.

STAMP PT. No. WHERE SHOWN

NAME HINGE BRACKET-CENTER STAB. & FIN STRUCTURE

OPP. HAND

DWG. SIZE D 28T1043

Columbia-Harkness Co., Inc. Buffalo
Imperial Tracing Cloth

SUPPLIES & EQUIPMENT CLASSIFICATION			
LET	ALTERATION	DATE	BY
B	TRACED	5·19·37	V·I·B

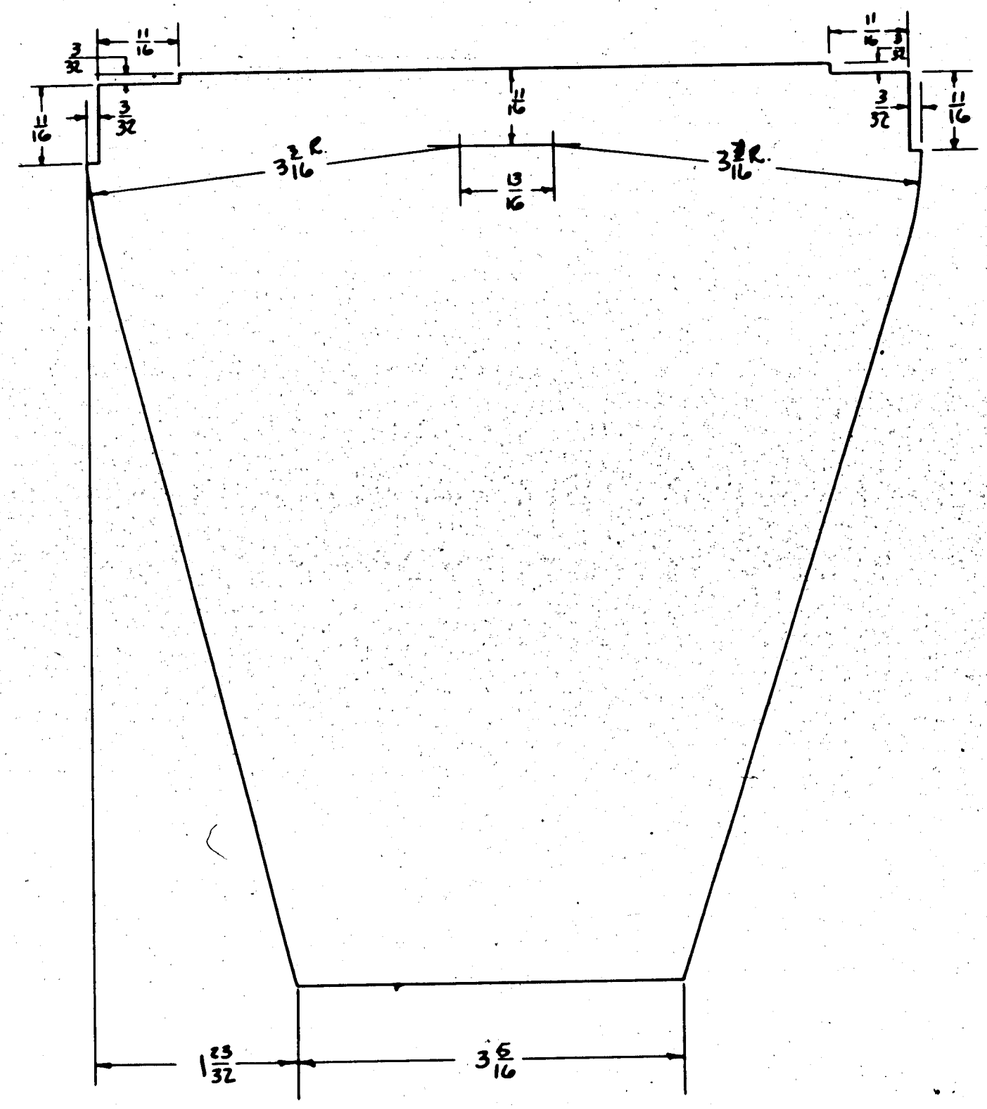

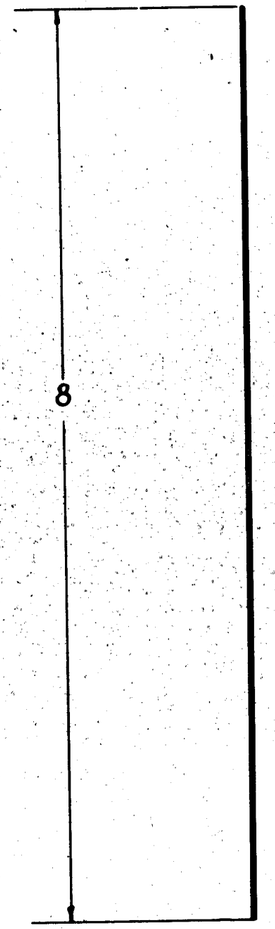

GP-GREEN PRIME

	PBY-5B	28T1045	2
	PBY-5A	28T1045	2
	PBY-4	28T1045-1	
	PBY-4	28T1045	
	PBY-3	28T1045-1	
	PBY-3	28T1046	
	PBY-2	28T1045	
	PBY-2	28T1045	
	PBY-1	28T1045-1	1
	PBY-1	28T1045	1

REPLACES											
REPLACED BY											
LIMIT ON DIMENSIONS UNLESS OTHERWISE SPECIFIED ± 1/64											
[redacted]											
APPROVED J.P.D. 5-19-37 DATE											
CALC.WT. .09 ACT.WT.											
SCALE 12"-1'-0"	O.N.	MODEL	NEXT ASSY.	REQ.	ST'D PARTS	LH REQ.	RH REQ.	PART NO.	LH REQ.	RH REQ.	
	REQUIREMENTS PER AIRPLANE				MAT.	PARTS LIST PER ASSY.					
AC					GP	DRAWN	TRACED	MILLED			
NAVY 24ST AL. ALLOY SHEET	FIRING CRIMP NALOY 24T		NONE		Z+P+Z[redacted]	5-26-36	5-29-37				
MATERIAL	SPEC.		HEAT TREAT		FINISH	DRAFT	CHECK	EXAM.	ENG.		
CONSOLIDATED AIRCRAFT CORP. BUFFALO, N. Y.	NAME FAIRING - ELEVATOR HINGE - INNER					OPP. HAND					
STAMP PT. No. WHERE SHOWN	SIZE D	DWG. NO. 28T1046									

SUPPLIES & EQUIPMENT CLASSIFICATION			
LET	ALTERATION	DATE	BY
B	TRACED	4-21-37	A.M.

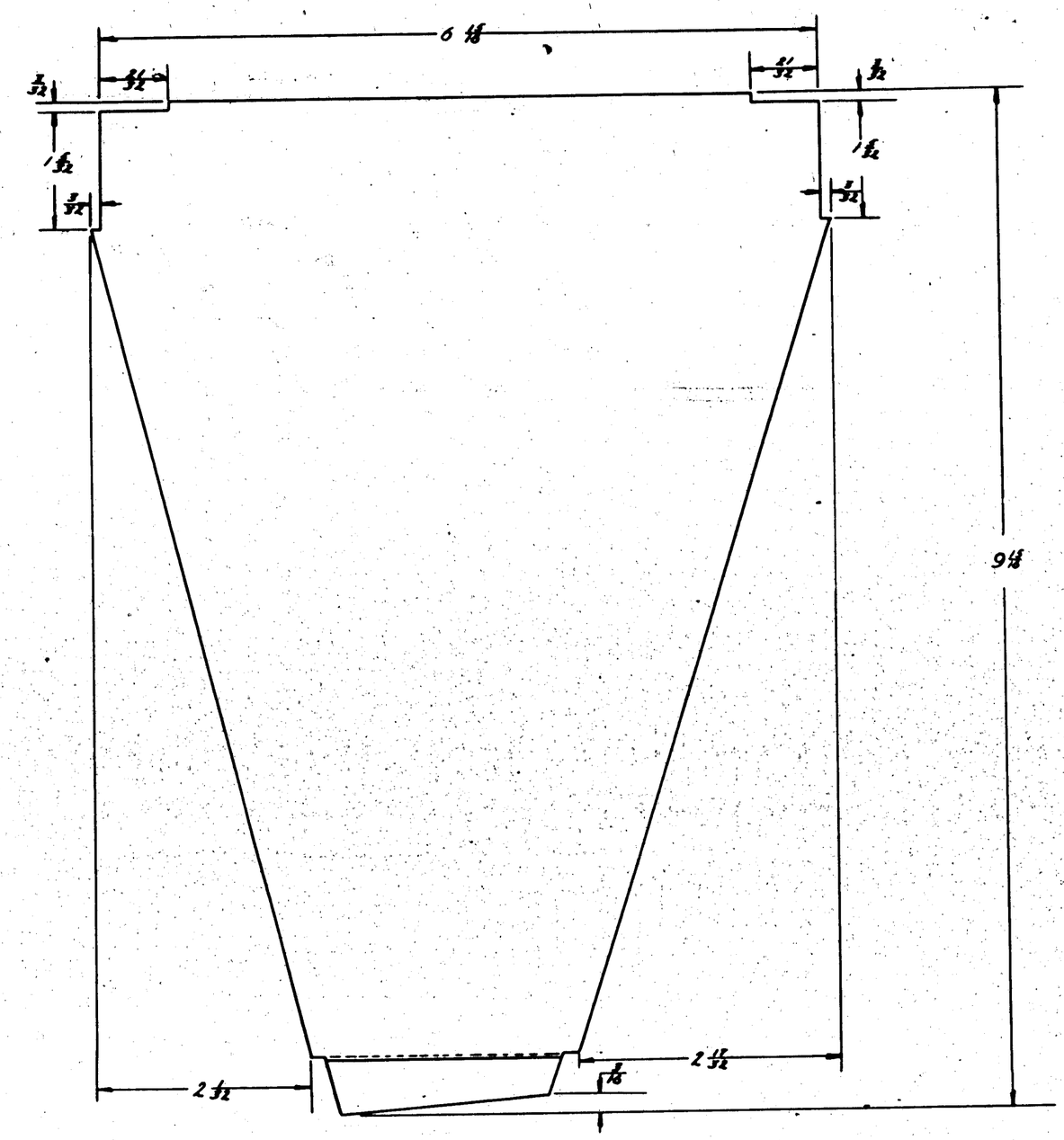

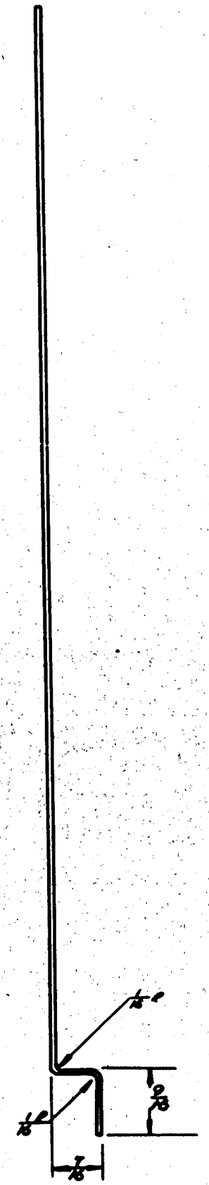

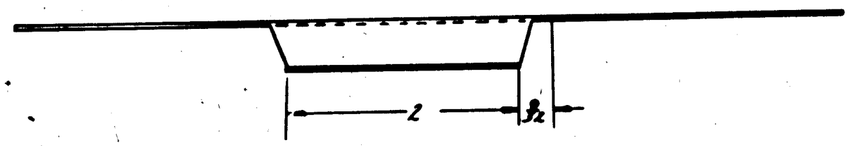

GP-GREEN PRIME

[redacted]

-R	PBY-5A-B	28T1045	LEH								
-L	PBY-5A-B	28T1045	MER								
-1	PBY-4	28T1045-1									
	PBY-4	28T1045									
-1	PBY-3	28T1045-1									
	PBY-3	28T1045									
-1	PBY-2	28T1045-1									
	PBY-2	28T1045									
-1	PBY-1	28T1045-1									
	PBY-1	28T1045									

O.H.	MODEL	NEXT ASSY.	REQ.	ST'D PARTS	LH REQ.	RH REQ.	PART NO.	LH REQ.	RH REQ.
REQUIREMENTS PER AIRPLANE				MAT.	PARTS LIST PER ASSY.				

REPLACES

REPLACED BY

LIMIT ON DIMENSIONS UNLESS OTHERWISE SPECIFIED ± 1/64

APPROVED [redacted] DATE 4-27-37

CALC. WT. ACT. WT.

SCALE 12" = 1'0"

AC

NAVY AN-QQ-A-250/4 ALLOY

MATERIAL: 4ATHD (CLAD) 24S-T COND T

SPEC. | HEAT TREAT

FINISH: ZP-2 [redacted] GP

TOOLS | JIGS

DRAFT | CHECK | EXAM. | ENG.

O-M-36

CONSOLIDATED AIRCRAFT CORP. BUFFALO, N. Y.

STAMP PT. No. WHERE SHOWN

NAME: FAIRING - ELEVATOR HINGE - OUTER

OPP. HAND 28T1047-1

SIZE D

28T1047

SUPPLIES & EQUIPMENT CLASSIFICATION			
LET	ALTERATION	DATE	BY
C	TRACED	5-20-37	V.I.B

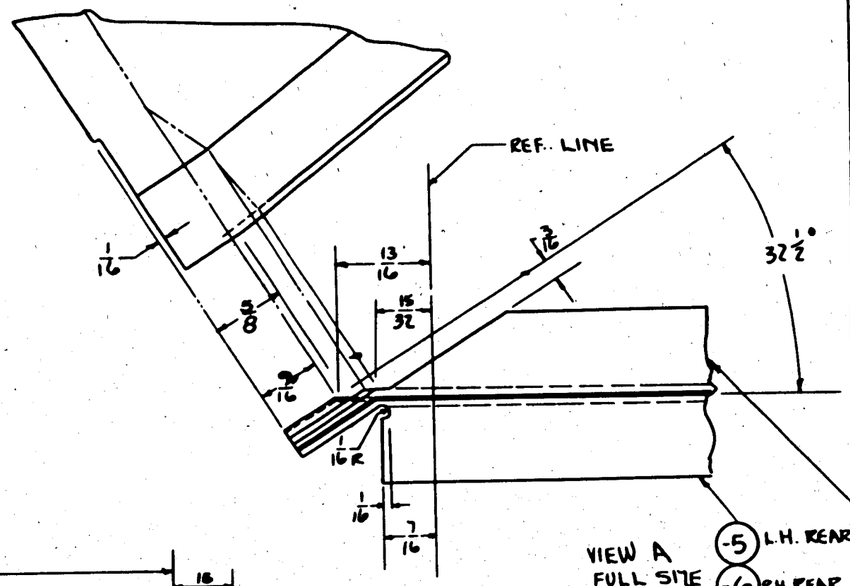

VIEW A
FULL SIZE

(-3) L.H. FWD.
(-5) L.H. REAR (-4) R.H. FWD
(-6) RH REAR ALL 3/4 x 3/4 x 1/16 AL. ALLOY ANGLE 24ST

OMIT UNTIL FINAL ASS'Y OF STABILIZER & FIN.

(-4) (-1)

AN442-D4
SPACE APPROX 1" APART

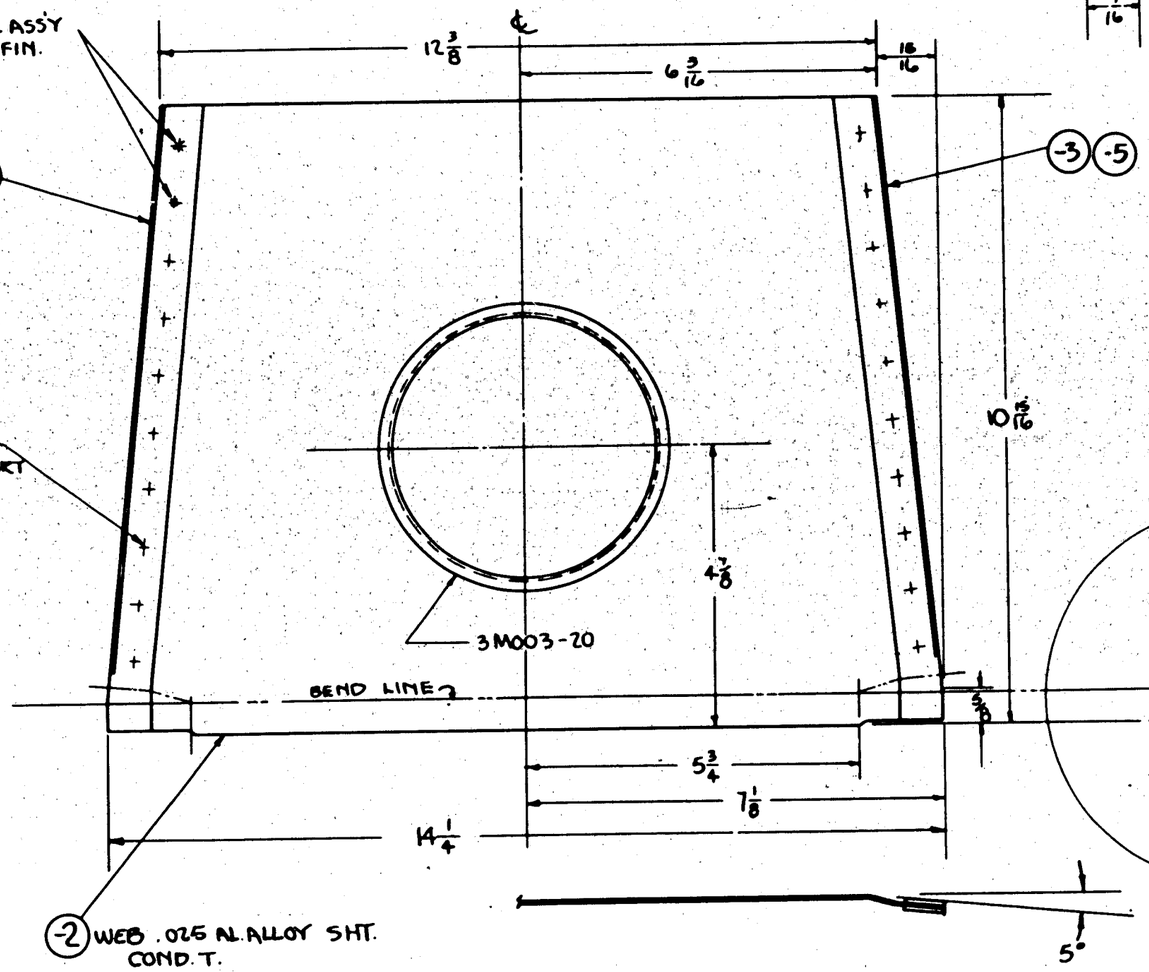

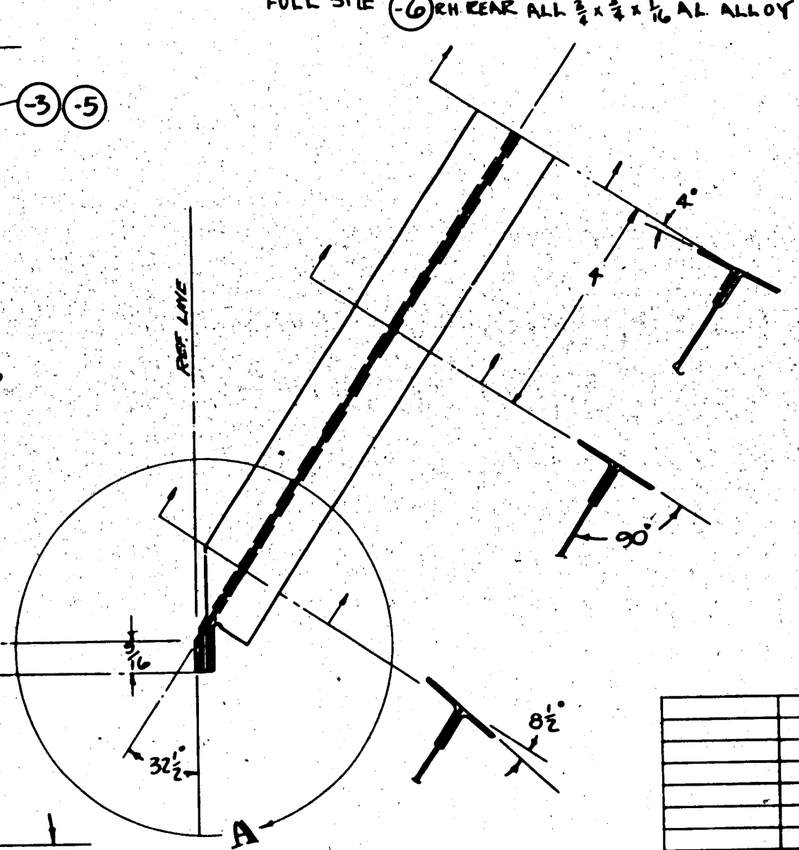

GP-GREEN PRIME
FINISH [redacted]

	PBY-5B	28T2029	1									-6	1		
	PBY-5A	28T2029	1									-5	1		
	PBY-4	28T2029										-4	1		
	PBY-3	28T2029										-3	1		
	PBY-2	28T2029										-2	1		
	PBY-1	28T1003		AN442-D4								-1	1		
O.H.	MODEL	NEXT ASSY.	REQ.	ST'D PARTS	LH REQ.	RH REQ.	PART NO.						LH REQ.	RH REQ.	
REQUIREMENTS PER AIRPLANE				MAT.	PARTS LIST PER ASSY.										
					1-27-37		H.W.B.								
NOTED	NOTED			2-P-2[redacted]GP	SOGES	5-29-37									
SPEC.	HEAT TREAT			FINISH	DRAFT	CHECK	EXAM.	ENG.							

REPLACES 28T1003-60
REPLACED BY
LIMIT ON DIMENSIONS UNLESS OTHERWISE SPECIFIED ± 1/32

APPROVED [redacted] 5-26-37 DATE
CALC. WT. 85 ACT. WT.
SCALE 6" & 12" = 1'-0"
AC
NAVY NOTED
MATERIAL

CONSOLIDATED AIRCRAFT CORP. BUFFALO, N. Y.
STAMP PT. No. WHERE SHOWN

NAME
SPAR ASSEM. FIN STUB

OPP. HAND
SIZE D
28T1048

LET	ALTERATION	DATE	BY
A	TRACED	2-14-38	LEHMAN

SUPPLIES & EQUIPMENT CLASSIFICATION

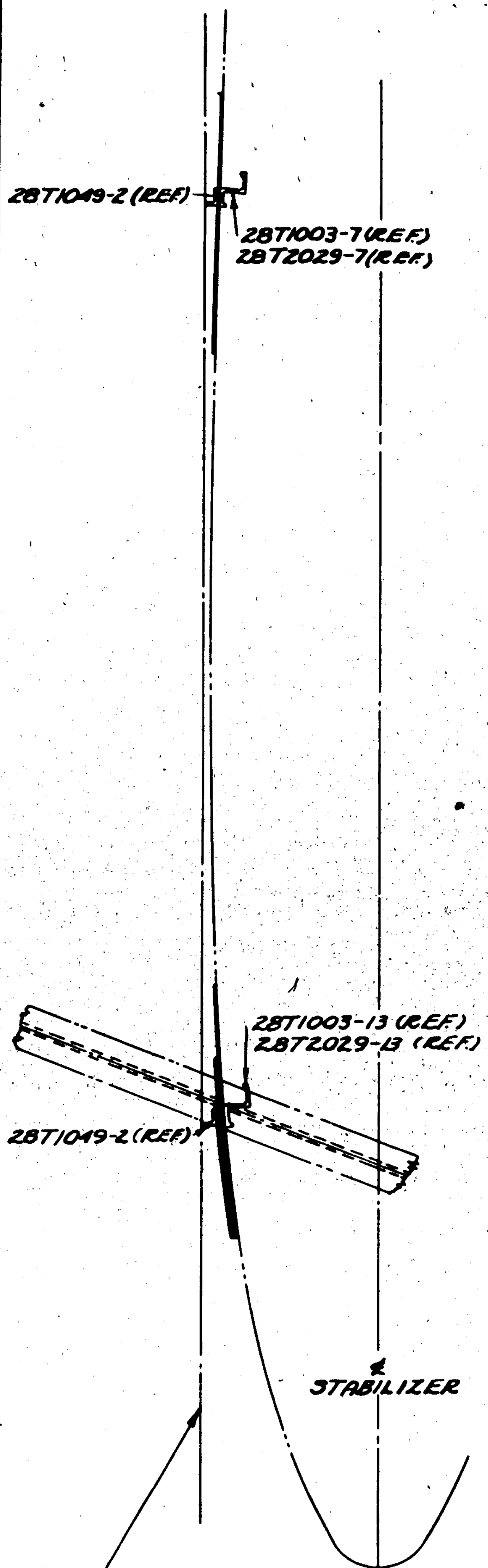

SECTION A-A
SCALE 3"=1'-0"

WITH STABILIZER IN VERTICAL POSITION, FILE ANGLES 28T1049-2 UNTIL THIS LINE IS PARALLEL TO THE ℄ OF STABILIZER. THE FINISHED HEIGHT OF ANGLES TO BE APPROX. 1/4"

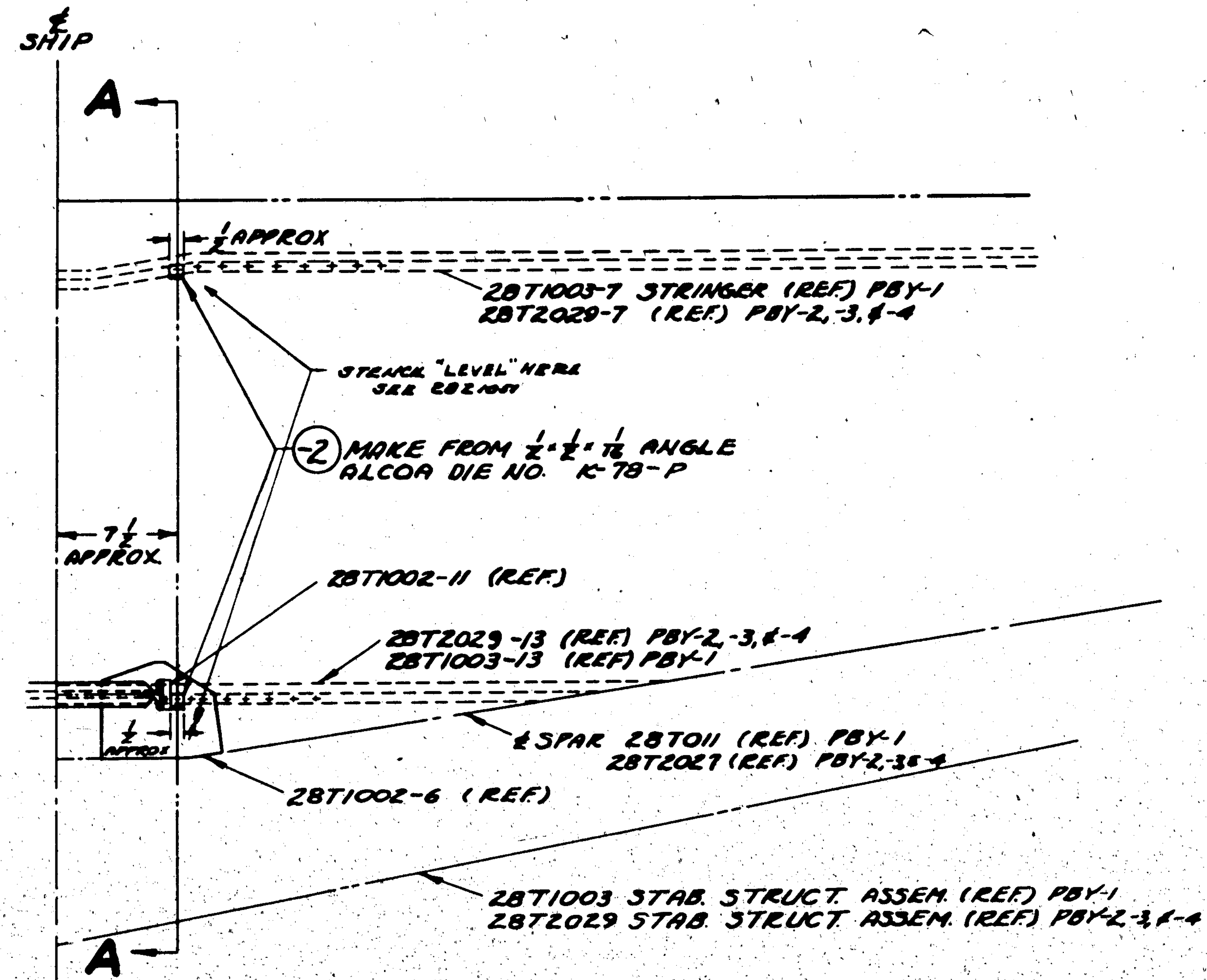

NOTE:
28T1049-2 LEVELING ANGLE ATTACHES TO STABILIZER, ON 28T1003-13, AT THE THIRD RIVET INBOARD OF THE END OF 28T1002-6.
BOTH ANGLES ARE AT THE SAME DISTANCE OUTBOARD OF ℄ OF SHIP.
LEVELING ANGLES ATTACH ON UPPER SURFACE AND PORT SIDE OF STABILIZER ONLY.

GP-GREEN PRIME

FINISH

Z	[redacted]
P	[redacted]
AP	[redacted]
C	[redacted]

O.H.	MODEL	NEXT ASSY.	REQ.
	PBY-5B	28T2029	1
	PBY-5A	28T2029	1
	PBY-4	28T2029	
	PBY-3	28T2029	
	PBY-2	28T2029	
	PBY-1	28T1003	

REQUIREMENTS PER AIRPLANE

ST'D PARTS	LH REQ.	RH REQ.	PART NO.	LH REQ.	RH REQ.
			28T1049-2	2	

MAT. PARTS LIST PER ASSY.

REPLACES	APPROVED	DATE
	PCW	

REPLACED BY	CALC. WT.	ACT. WT.
	J. B. J.	

LIMIT ON DIMENSIONS UNLESS OTHERWISE SPECIFIED ± 1/64

SCALE 1 1/2"=1'-0" & NOTED

[redacted]

	MATERIAL	SPEC.	HEAT TREAT	FINISH	DRAFT	CHECK	EXAM.	ENG.
AC					Palbrow		Moffitt	R
NAVY	NOTED	NOTED	NONE	Z-P-GP ON -2 BEFORE INSTALL.	11-19-37			

CONSOLIDATED AIRCRAFT CORP.
SAN DIEGO, CALIF.
STAMP PT. NO. WHERE SHOWN

NAME INSTALL. - LEVEL POINTS STAB. INCIDENCE

OPP. HAND

DWG. SIZE D 28T1049

PRINTED ON "IMPERIAL" TRACING CLOTH

SUPPLIES & EQUIPMENT CLASSIFICATION			
LET	ALTERATION	DATE	BY
D	TRACED	9-9-41	MLL
E.	DIM. 2 1/8 WAS 2 1/16.	6-25-42	RBLETT
F.	CHG. DIM / 1/8 WAS 3/16 3/16	7-29-42	Nelson
	WAS 13/16 & 9/32 WAS 11/32		

E.O. 3830
E.O. 3845
PBY5, 28-5 AC & A

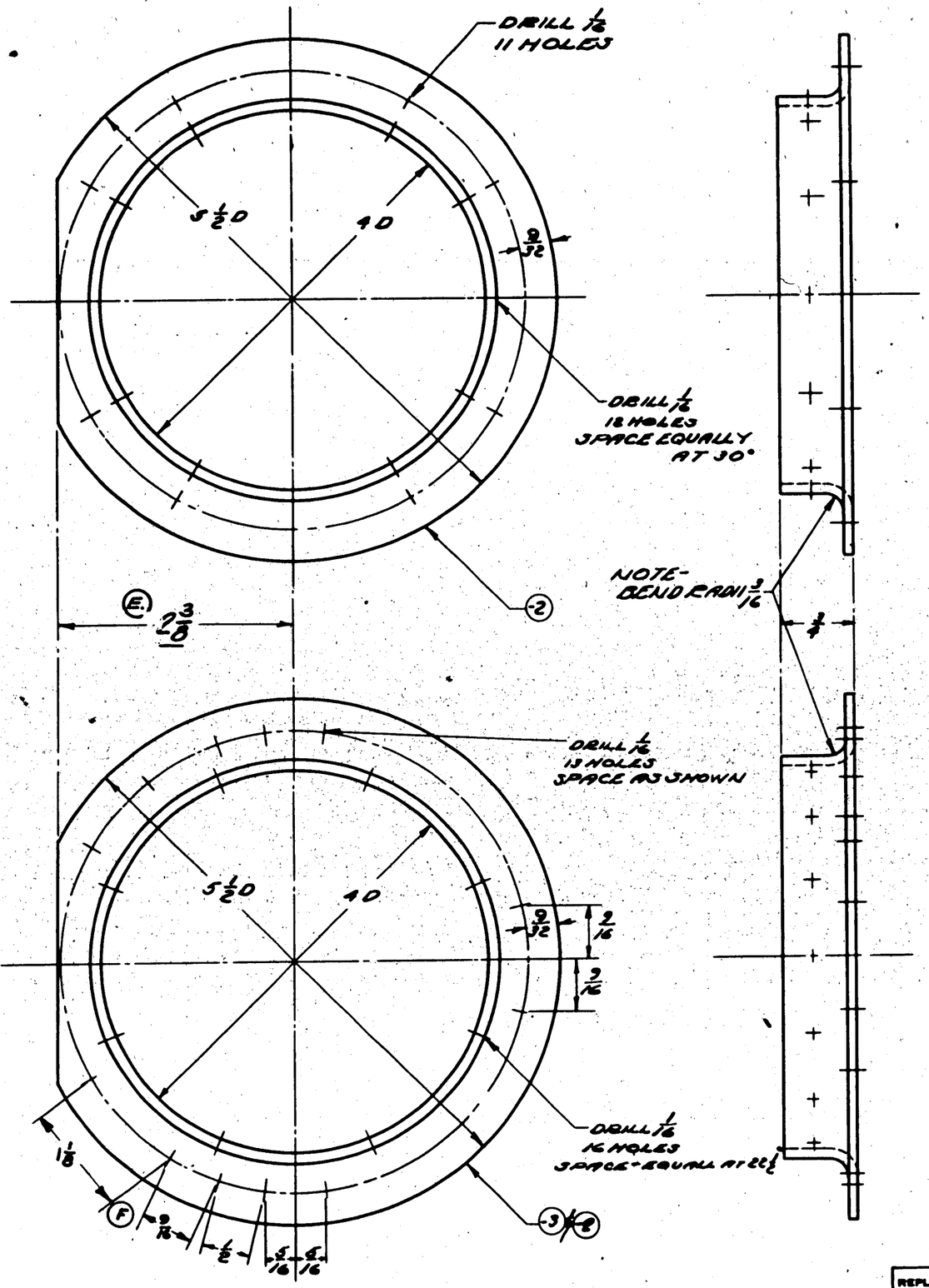

NOTE: SAME SPACING OF HOLES ON TOP SIDE

FINISH C:

-C-3	28BMN	28T2013	2										
-C-3	28BMC	28T2013	2										
-C-3	28BMA	28T2013	2										
-C-3	28BME	28T2013	2										
-C-3	28BMC	28T2013	2										
-C-3	PBY5A	28T2013	2										
-C-3	PBY5	28T2013	2										
-3	PBY-4	28T2013	2										
-2	PBY-4	28T2012	2										
-3	PBY-3	28T2013	2										
-2	PBY-3	28T2013	2										
-3	PBY-2	28T2013	2										
-2	PBY-2	28T2013	2										

O.H.	MODEL	NEXT ASSY.	REQ.	ST'D PARTS	LH REQ.	RH REQ.	PART NO.	LH REQ.	RH REQ.

REPLACES 28T2010 of 9-4-36
REPLACED BY
LIMIT ON DIMENSIONS UNLESS OTHERWISE SPECIFIED ± .015
[redacted]

APPROVED [redacted] 11-9-36 DATE
.17 JAM. CALC.WT. ACT.WT.
SCALE 12" = 1'-0"
AC
NAVY .051 ALUM. ALLOY SHEET
MATERIAL

REQUIREMENTS PER AIRPLANE | MAT. | PARTS LIST PER ASSY.

STAMP SPEC. | HEAT TREAT | FINISH | DRAFT | CHECK | EXAM. | ENG.
SPEC.: ALUMINUM ALLOY 24S
HEAT TREAT: 3R53 CONDIT
FINISH: Z-P

CONSOLIDATED AIRCRAFT CORP. BUFFALO, N. Y.
STAMP PT. No. WHERE SHOWN

NAME: FLANGES-ELEVATOR TORQUE TUBE
OPP. HAND
SIZE D
28T2010

SULLIVAN-SCHWEIGER CO., INC. BUFFALO
IMPERIAL TRACING CLOTH

LET	ALTERATION	DATE	BY
A	3/8 DIA. DRAIN HOLE ADDED	4/16/40	AF
B	ADDED ALTERNATE METH. OF FLANGING DWG.	9/16/40	Boyd

F.O. 1401A

21 3/4 — 13 — 6 — 1 3/4

10 1/4 — 9 13/32 — 8 11/16 — 8 1/32

Q2110-512 INDENTATION — Q2155-7-16.0 BEAD

A — A

Ⓐ 3/8 DIA DRAIN HOLES.

5 7/16 Ⓐ — 6 — 7 1/4

19 7/8 R — 7 R — 4R — 2R

2 1/4 — 4 3/4 — 1 1/32 R — 2 3/8 — 1 — 4 3/4

℄ RUDDER SPAR (REF.)

B — B — 25° — 25° — 25° — 90°

Q2131 - EA. CORNER

3 END FLANGE 3° FROM HERE AFT.

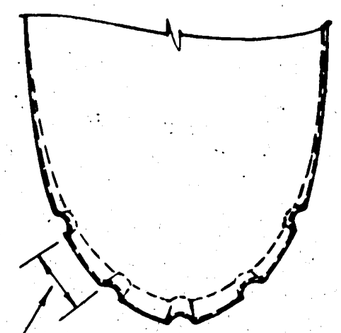

℄ SYMMETRY

FLAT AREA APPROX SAME WIDTH AS SCALLOP

MAT'L. DEPRESSED TO FORM FLANGE. ELIM. SCALLOP

ALTERNATE METH. OF FLANGING

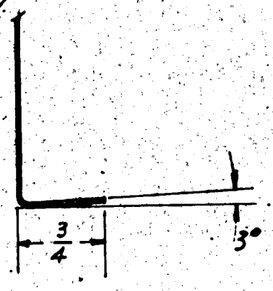

3/4 — 3°

SECTION B-B

FINISH

Z	ANODIC TREATMENT
P	P-27 PRIMER
AP	ALUMINIZED PRIMER
C	CADMIUM PLATE

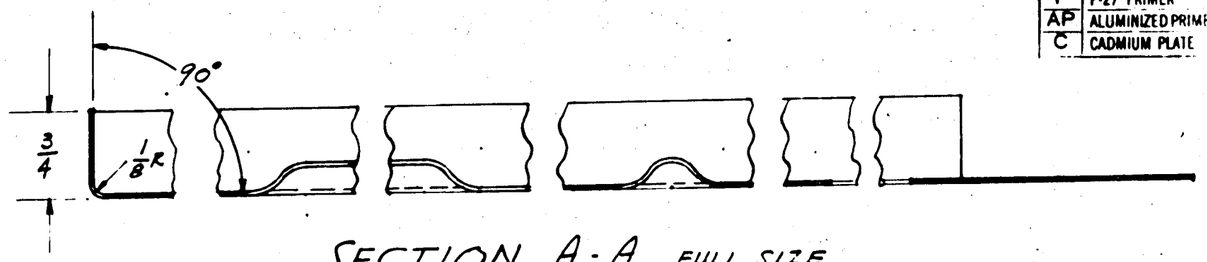

SECTION A-A FULL SIZE

ASSY DASH NO.	MODEL	NEXT ASSY	REQ
	PBY-5B	28T5005	1
	PBY-5A	28T5005	1
	PBY-5	28T5005	1

REQUIREMENTS PER AIRPLANE

REPLACES — CALC WT.

REPLACED BY — ACT. WT.

UNLESS OTHERWISE SPECIFIED 1/32 — SCALE 6" = 1'-0"

STAMP PART NUMBER WHERE SHOWN

PART NO.	STOCK	MATERIAL	SPEC.	LH REQ. -0	RH REQ. -2	LH REQ. -3	RH REQ. -4	LH REQ. -5	RH REQ.
	.025 x 25 x 30	ALCLAD	47A8-A						

PARTS LIST PER ASSY.

A C		Jones					
NAVY SR-53	Z-P-BAP	3-13-40					
HEAT TREAT	FINISH	DRAFT	CHECK	STRUCT	MAT.	APPROV	ENG.

NAME RIB - RUDDER - STA. 13/16 NOSE

OPP. HAND NONE

CONSOLIDATED AIRCRAFT CORP. SAN DIEGO, CALIF.

SIZE D — DWG. 28T5020

LET	ALTERATION	DATE	BY
A	ADDED ALTERNATE METH. OF FLANGING DWG.	4/6/40	Floyd

A.O. 1401 A

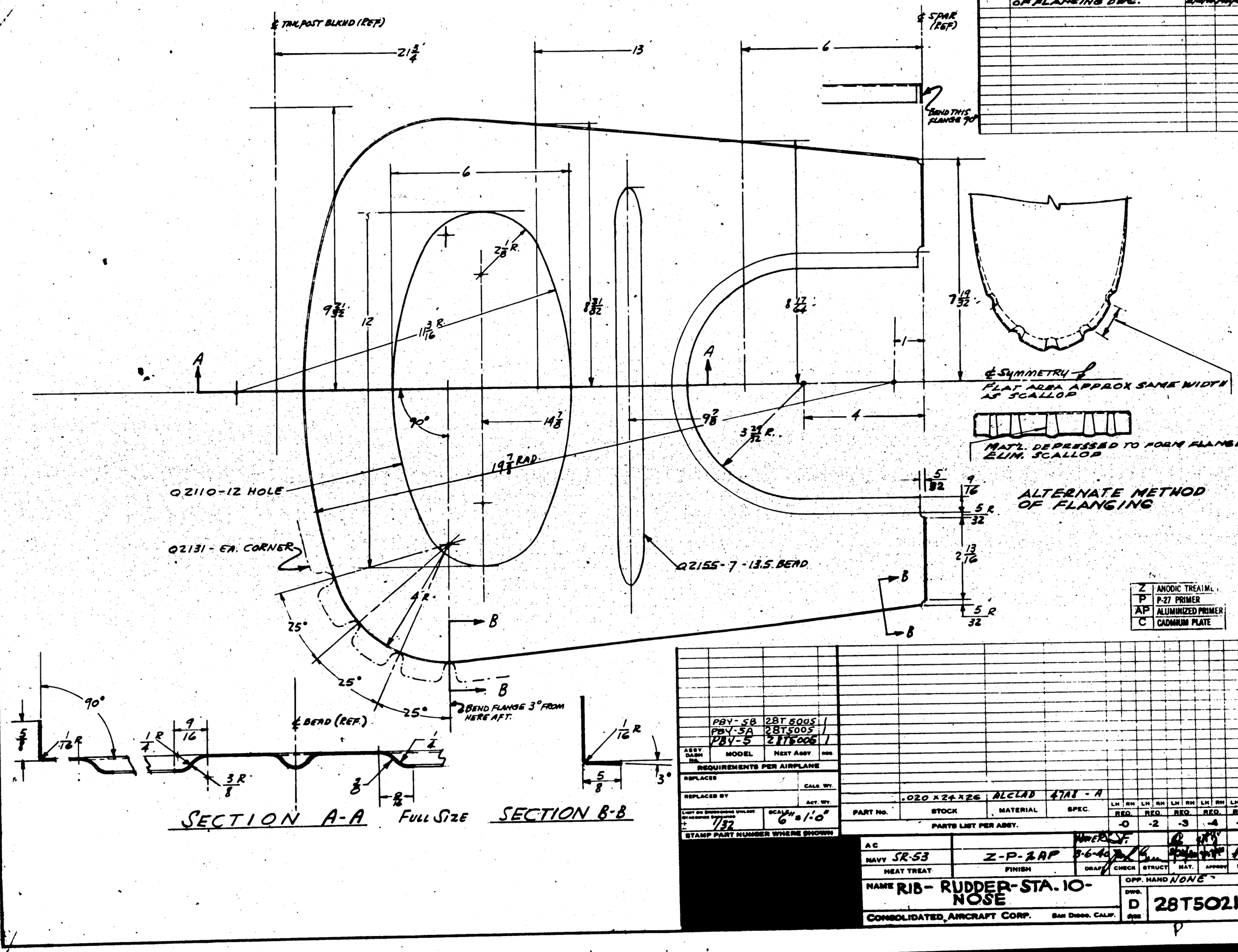

Z	ANODIC TREATMT.
P	P-27 PRIMER
AP	ALUMINIZED PRIMER
C	CADMIUM PLATE

SECTION A-A Full Size SECTION B-B

ASSY DASH NO.	MODEL	NEXT ASSY	DASH NO.
	PBY-5B	28T8005	1
	PBY-5A	28T5005	1
	PBY-5	28T5006	1

REQUIREMENTS PER AIRPLANE

REPLACES — CALC. WT.

REPLACED BY — ACT. WT.

LIMIT ON DIMENSIONS UNLESS OTHERWISE SPECIFIED ± 1/32 — SCALE 6" = 1'-0"

STAMP PART NUMBER WHERE SHOWN

PART NO.	STOCK	MATERIAL	SPEC.	LH REQ.	RH REQ.	LH REQ.	RH REQ.	LH REQ.	RH REQ.	LH REQ.	RH REQ.	LH REQ.	RH REQ.
	.020 x 24 x 26	ALCLAD	47A8 - A	-0		-2		-3		-4		-5	

PARTS LIST PER ASSY.

AC			3-6-40						
NAVY SR-53	Z-P-2AP								
HEAT TREAT	FINISH	DRAFT	CHECK	STRUCT	MAT.	APPROV	ENG.		

NAME RIB - RUDDER - STA. 10 - NOSE

OPP. HAND NONE

CONSOLIDATED AIRCRAFT CORP. San Diego, Calif.

DWG. SIZE D — 28T5021

LET	ALTERATION	DATE	BY
A	ADDED ALTERNATE METH. OF FLANGING DWG.		

E.O. 1901A

℄ TAILPOST BLKHD (REF)

℄ SPAR (REF)

$21\frac{3}{4}$ — 13 — 6

BEND THIS FLANGE 90°

$9\frac{5}{64}$ $8\frac{7}{16}$ $7\frac{13}{16}$ $7\frac{5}{32}$

A A

1

℄ SYMMETRY

FLAT AREA APPROX. SAME WIDTH AS SCALLOP

90° $14\frac{7}{8}$ $9\frac{7}{8}$ $5\frac{29}{32}$ R 4

$19\frac{7}{8}$ RAD.

Q2110-12 HOLE

Q2131-EA CORNER

4R

Q2155-7-13.5 BEAD

B B

B

BEND FLANGE 3° FROM HERE AFT.

25° 25° 25°

NAIL DEPRESSED TO FORM FLANGE FLUSH SCALLOP

$\frac{5}{32}$ $\frac{9}{16}$ $\frac{5}{32}$ R $2\frac{3}{8}$ $\frac{5}{32}$ R

ALTERNATE METHOD OF FLANGING

FINISH	
Z	ANODIC TREATM.
P	P-27 PRIMER
AP	ALUMINIZED PRIMER
C	CADMIUM PLATE

90° $\frac{1}{16}$ R $\frac{5}{8}$ ℄ BEAD (REF.) $\frac{9}{16}$ $\frac{1}{4}$ R $\frac{3}{8}$ R

SECTION A-A FULL SIZE

$\frac{1}{16}$ R $\frac{5}{8}$ 5°

SECTION B-B

ASSY. DASH NO.	MODEL	NEXT ASSY	REQ.
	PBY-5B	28T5005	1
	PBY-5A	28T5005	1
	PBY-5	28T5005	1

REQUIREMENTS PER AIRPLANE

REPLACES — CALS. WT.

REPLACED BY — ACT. WT.

LIMIT ON DIMENSIONS WITH NO OTHER TOLERANCES SPECIFIED ± 1/32

SCALE 6" = 1'-0"

STAMP PART NUMBER WHERE SHOWN

PART No.	STOCK	MATERIAL	SPEC.	LH REQ. -0	RH REQ. -2	LH REQ. -3	RH REQ. -4	LH REQ. -5	RH REQ.
	.020 x 23 x 26	ALCLAD	4TAT - A						

PARTS LIST PER ASSY.

AC		DRAWN	CHECK	STRUCT	MAT.	APPROV	ENG.
NAVY SR-53	Z-P-2AR	8-6-40			3/24/40		
HEAT TREAT	FINISH						

NAME RIB-RUDDER-STA. 20-NOSE

OPP. HAND NONE

CONSOLIDATED AIRCRAFT CORP. SAN DIEGO, CALIF.

DWG. SIZE D — 28T5022

LET	ALTERATION	DATE	BY
A	ADDED ALTERNATE METH. OF FLANGING DWG.		

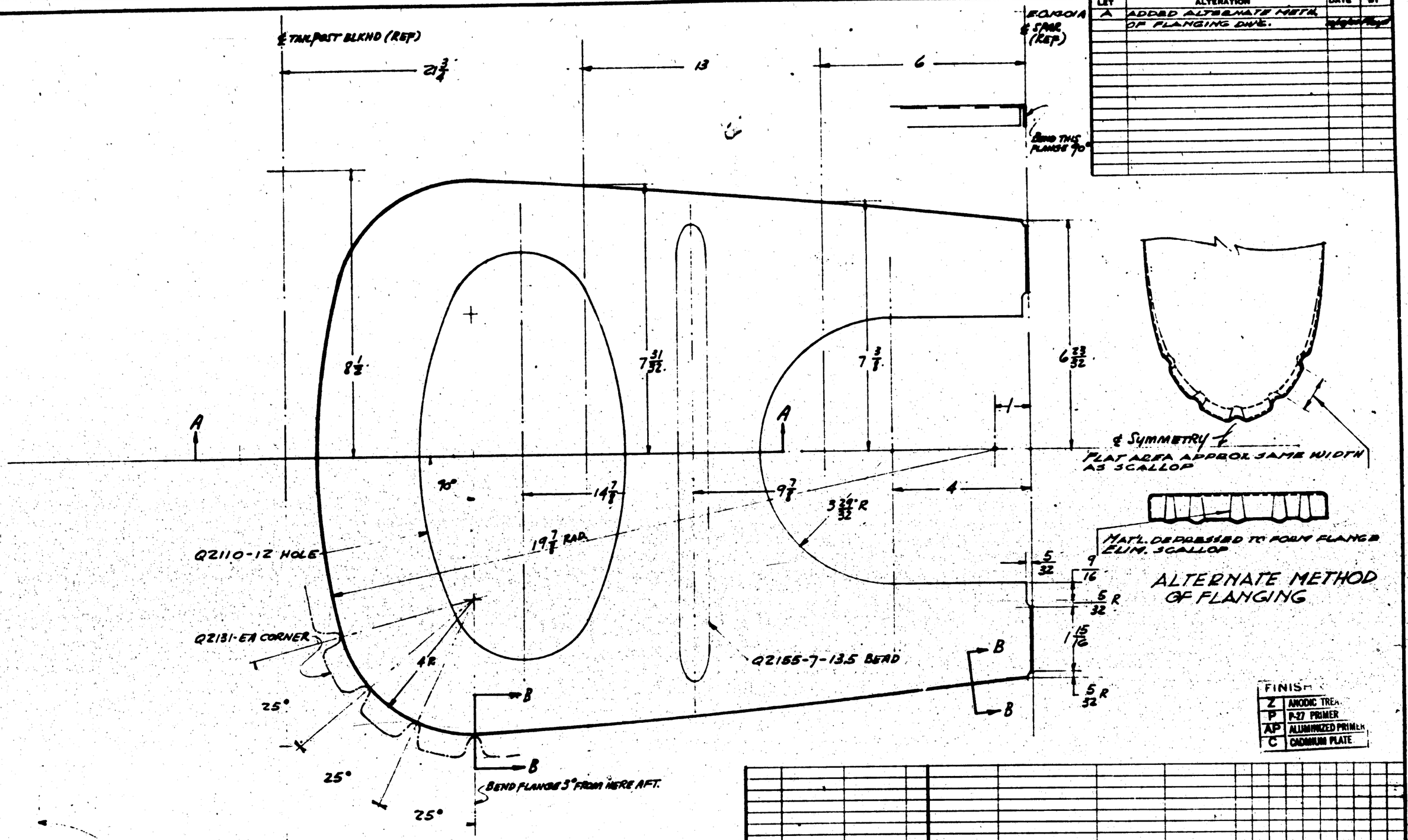

FINISH	
Z	ANODIC TREA.
P	P-27 PRIMER
AP	ALUMINIZED PRIMER
C	CADMIUM PLATE

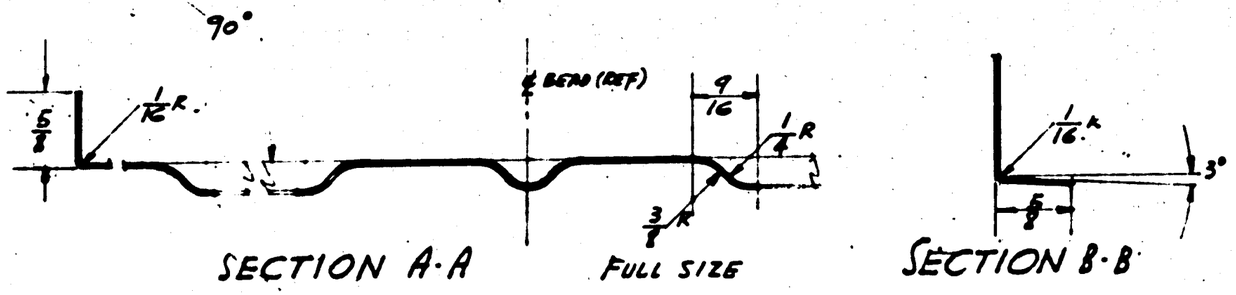

SECTION A-A FULL SIZE

SECTION B-B

ASSY DASH No.	MODEL	NEXT ASSY.	REQ.
	PBY-5B	28T5005	1
	PBY-5A	28T5005	1
	PBY-5	28T5005	1

REQUIREMENTS PER AIRPLANE

REPLACES — CALC. WT.

REPLACED BY — ACT. WT.

LIMIT OF DIMENSIONS UNLESS OTHERWISE STATED ± 1/32 — SCALE 6"=1'-0"

STAMP PART NUMBER WHERE SHOWN

PART No.	STOCK	MATERIAL	SPEC.	LH REQ.	RH REQ.	LH REQ.	RH REQ.	LH REQ.	RH REQ.	LH REQ.	RH REQ.	LH REQ.	RH REQ.
	.028 X 22 X 26	ALCLAD	4TAT - A	-0		-2		-3		-4		-5	

PARTS LIST PER ASSY.

AC									
NAVY SR-53	Z-P-2AP	3-6-40							
HEAT TREAT	FINISH	DRAFT	CHECK	STRUST	MAT.	APPROV.	ENG.		

OPP. HAND NONE

NAME RIB - RUDDER - STA. 30 - NOSE

CONSOLIDATED AIRCRAFT CORP. San Diego, Calif.

SIZE D — 28T5023

R

LET	ALTERATION	DATE	BY

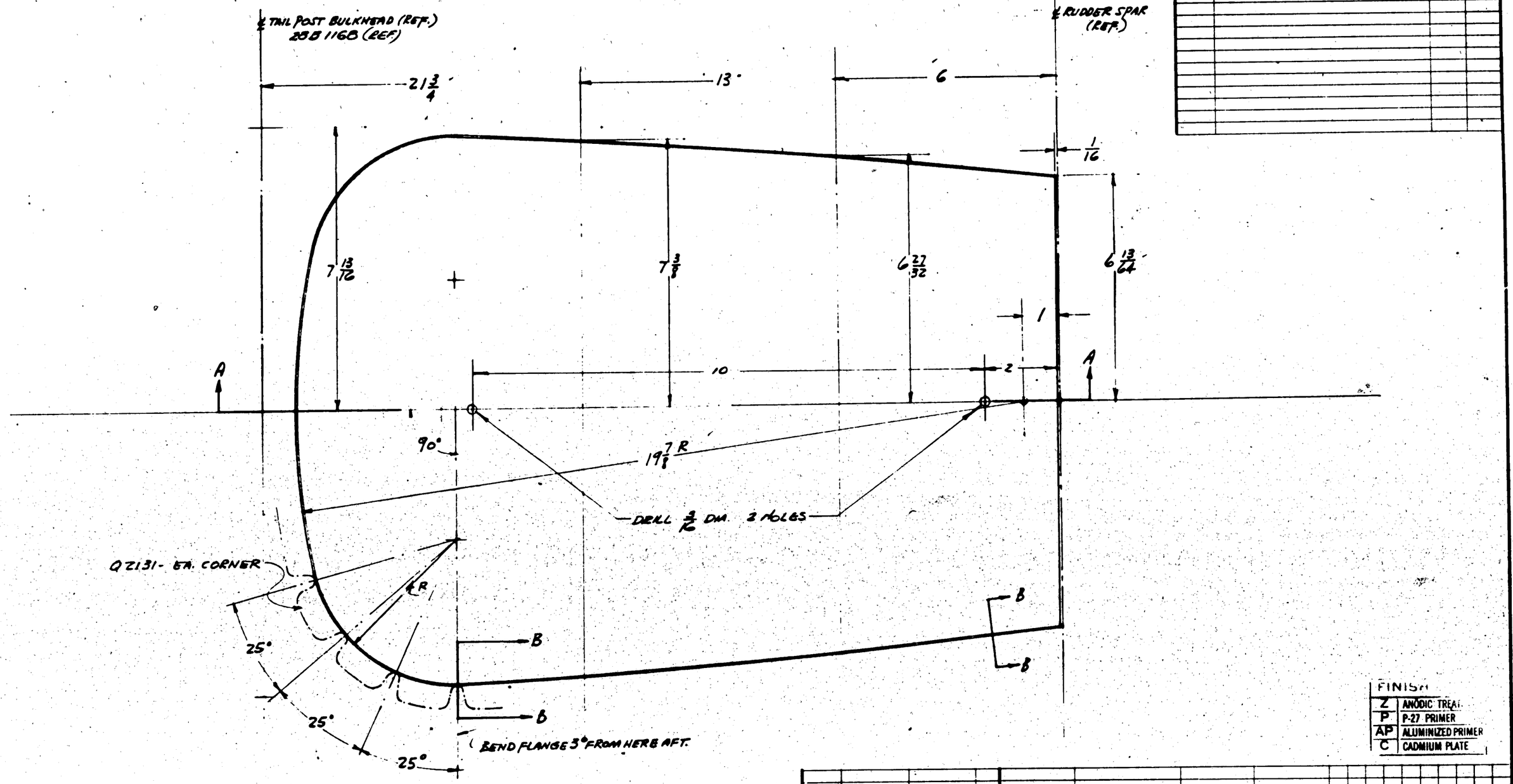

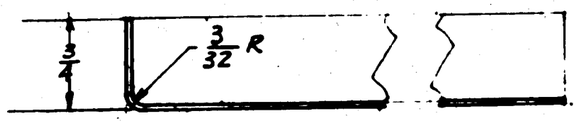

SECTION A-A FULL SIZE

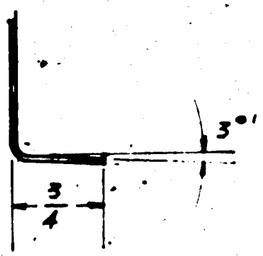

SECTION B-B

FINISH

Z	ANODIC TREAT
P	P-27 PRIMER
AP	ALUMINIZED PRIMER
C	CADMIUM PLATE

ASSY DASH NO.	MODEL	NEXT ASSY	REQ
	PBY-5B	28T5006	1
	PBY-5A	28T5005	1
	PBY-5	28T5003	1

REQUIREMENTS PER AIRPLANE

REPLACES — CALC WT.

REPLACED BY — ACT. WT.

LIGHT ON DRAWINGS UNLESS OTHERWISE SPECIFIED ± 1/32 — SCALE 6" = 1'-0"

STAMP PART NUMBER WHERE SHOWN

PART NO.	STOCK	MATERIAL	SPEC.	LH REQ.	RH REQ.	LH REQ.	RH REQ.	LH REQ.	RH REQ.	LH REQ.	RH REQ.	LH REQ.	RH REQ.
	.064 X 21 X 26	ALCLAD	47A8 - A										
PARTS LIST PER ASSY.				-0		-2		-3		-4		-5	

AC		Power	JF			
NAVY SR-53	Z-P-2AP	3-6-40				
HEAT TREAT	FINISH	DRAFT	CHECK	STRUCT	MAT.	APPROV	ENG.

NAME RIB - RUDDER - STA. 41 29/32 - NOSE

OPP. HAND NONE

CONSOLIDATED AIRCRAFT CORP. SAN DIEGO, CALIF.

DWG. SIZE D — 28T5024

R

LET	ALTERATION	DATE	BY
A	REMOVED S/R ADDED OFFSET	10-9-40	Duff

E.O. 365 (NORTHROP)

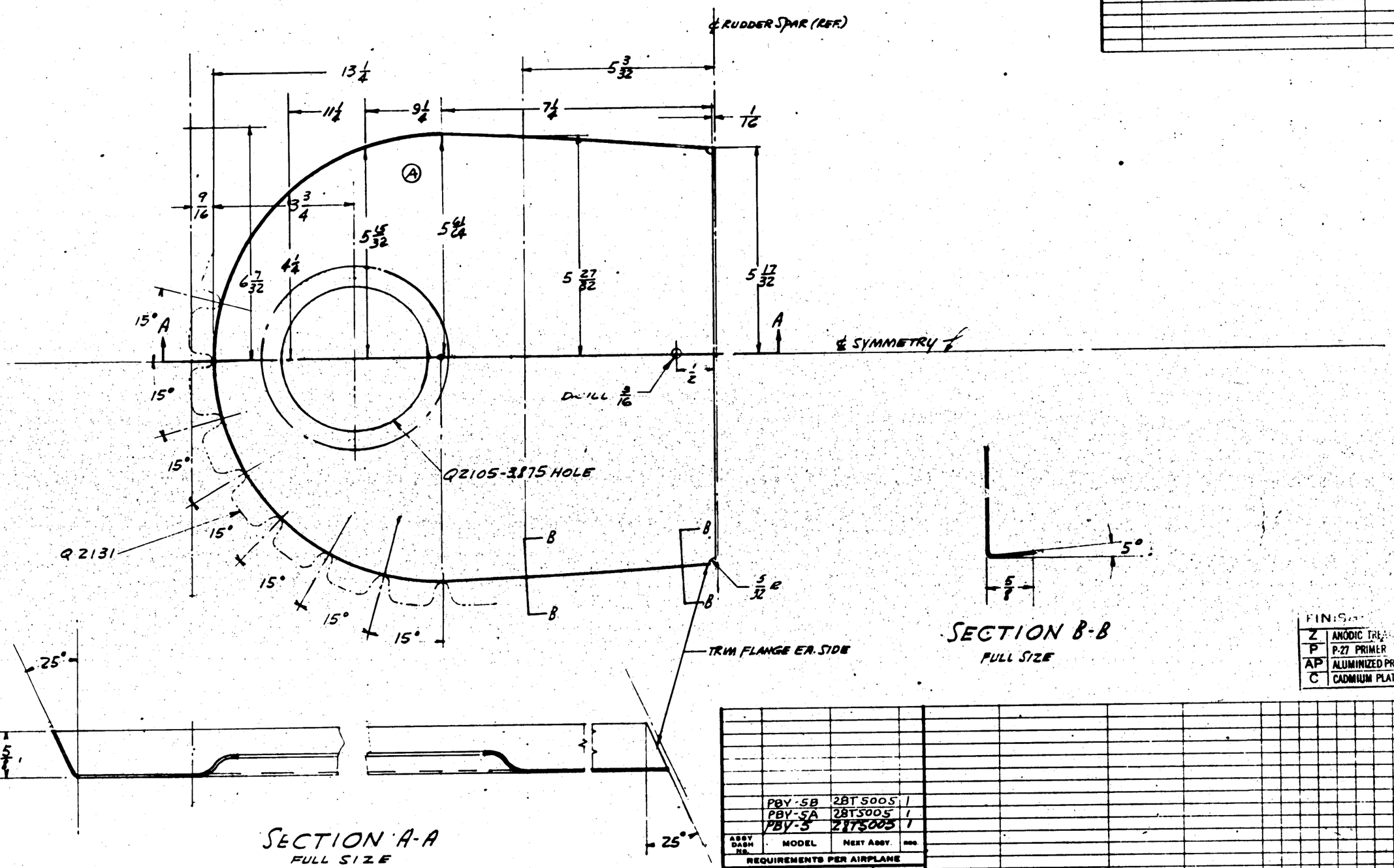

SECTION A-A
FULL SIZE

SECTION B-B
FULL SIZE

FINISH

Z	ANODIC TREAT
P	P-27 PRIMER
AP	ALUMINIZED PRIMER
C	CADMIUM PLATE

ASSY DASH NO.	MODEL	NEXT ASSY.	REQ.
	PBY-5B	28T5005	1
	PBY-5A	28T5005	1
	PBY-5	28T5005	1

REQUIREMENTS PER AIRPLANE

REPLACES — CALC WT.

REPLACED BY — ACT WT.

LIGHT ON DIMENSIONS UNLESS OTHERWISE SPECIFIED ± 1/32

SCALE 6" = 1'-0"

STAMP PART NUMBER WHERE SHOWN

PART No.	STOCK	MATERIAL	SPEC.	LH REQ. -0	RH REQ. -2	LH REQ. -3	RH REQ. -4	LH REQ. -5	RH REQ.
	.064 X 18 X 18	ALCLAD	47A8-A						

PARTS LIST PER ASSY.

AC
NAVY SR-53
HEAT TREAT

Z-P-BAP
FINISH

DRAFT 3-7-40 CHECK STRUCT MAT. TOOLING ENGR.

NAME RIB - RUDDER - STA. 62 2/16 - NOSE

OPP. HAND NONE

CONSOLIDATED AIRCRAFT CORP. SAN DIEGO, CALIF.

DWG. D SIZE 28T5025

LET	ALTERATION	DATE	BY
A	ADDED ALTERNATE METH. OF FLANGING TO DWG.	8/16/40	Rump

E.O. 1401A

$\frac{5}{32}$

Q2105-5.875 HOLE

$5\frac{1}{2}$ R.

$5\frac{13}{16}$

A

A

15°

$5\frac{7}{8}$

12

15°

Q2131 AROUND SEMICIRCLE

$12\frac{1}{2}$

15°

15°

15°

15°

$5\frac{3}{8}$

$4\frac{5}{8}$

B

B

B

B

90°

$\frac{1}{16}$ R

SECTION A-A

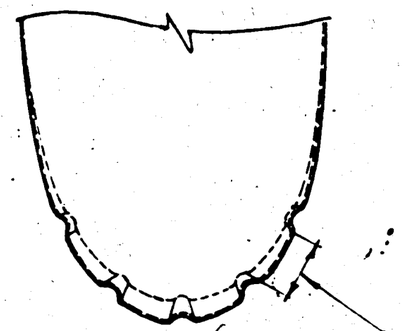

℄ SYMMETRY

FLAT AREA APPROX SAME WIDTH AS SCALLOP

MAT'L. DEPRESSED TO FORM FLANGE E LIM. SCALLOP

ALTERNATE METHOD OF FLANGING

$4\frac{31}{32}$

FINISH	
Z	ANODIC
P	P-27 PRIMER
AP	ALUMINIZED PRIM.
C	CADMIUM PLATE

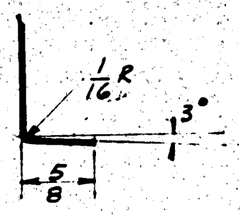

SECTION B-B

ASSY DASH NO.	MODEL	NEXT ASSY.	QUAN.
	PBY-5B	28T5005	1
	PBY-5A	28T5005	1
	PBY-5	28T5005	1

REQUIREMENTS PER AIRPLANE

REPLACES — CALC WT.

REPLACED BY — ACT WT.

LIGHT ON DIMENSIONS UNLESS OTHERWISE SPECIFIED ± 1/32

SCALE FULL SIZE

STAMP PART NUMBER WHERE SHOWN

PART NO.	STOCK	MATERIAL	SPEC.	LH REQ. -0	RH REQ. -2	LH REQ. -3	RH REQ. -4	LH REQ. -5	RH REQ.
	.020 x 16 x 18	ALCLAD	4748-A						

PARTS LIST PER ASSY.

A-C			Power	S.F.		
NAVY SR-53	Z-P-2AP	8-7-40	Paul Gunn	9-24-40	Stuart	R
HEAT TREAT	FINISH	DRAFT	CHECK	STRUCT	MAT.	APPROV. ENG.

NAME RIB - RUDDER - STA. $69\frac{3}{4}$ - NOSE

OPP. HAND NONE

CONSOLIDATED AIRCRAFT CORP. SAN DIEGO, CALIF.

DWG. SIZE D — 28T5026

R.

LET	ALTERATION	DATE	BY
A	ADDED ALTERNATE METH. OF FLANGING TO DW'G.		

B.O. 17901A

$12\frac{1}{2}$ 12 $4\frac{5}{8}$ $4\frac{25}{32}$ R Q2105-5.875 HOLE $5\frac{1}{32}$ $4\frac{5}{8}$ $4\frac{7}{32}$

A A

18° 18° 18° 18° 18°

Q 2131 AROUND SEMICIRCLE

B B B B

$6\frac{1}{16}$

$\frac{5}{32}$

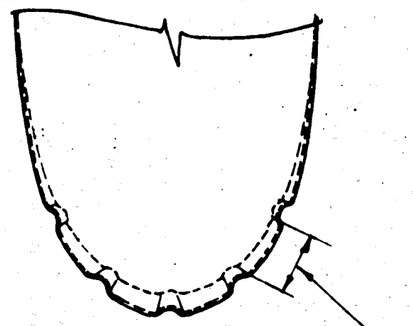

℄ SYMMETRY ℄

FLAT AREA APPROX SAME WIDTH AS SCALLOP

℄ RUDDER SPAR (REF.)

MAT'L. DEPRESSED TO FORM FLANGE ELIM. SCALLOP

ALTERNATE METHOD OF FLANGING

Z	ANOD. TREATMENT
P	P-27 PRIMER
AP	ALUMINIZED PRIMER
C	CADMIUM PLATE

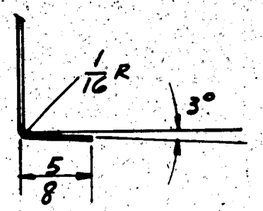

SECTION B-B

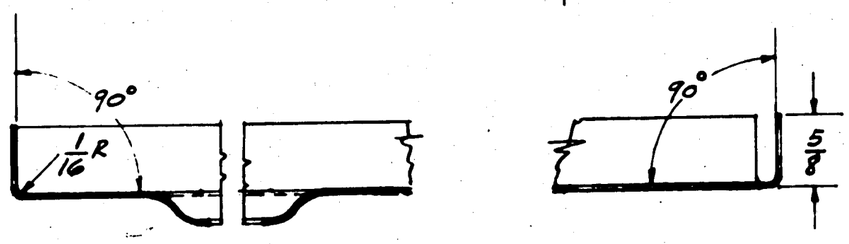

SECTION A-A

ASSY. DASH NO.	MODEL	NEXT ASSY.	QUAN.
	PBY-5B	28T5005	1
	PBY-5A	28T5005	1
	PBY-5	28T5003	1

REQUIREMENTS PER AIRPLANE

REPLACES

REPLACED BY

CALC. WT.

ACT. WT.

LIMIT OF DIMENSIONS UNLESS OTHERWISE SPECIFIED ± 1/32

SCALE FULL SIZE

STAMP PART NUMBER WHERE SHOWN

PART NO.	STOCK	MATERIAL	SPEC.	LH REQ. -0	RH REQ. -2	LH REQ. -3	RH REQ. -4	LH REQ. -4	RH REQ. -5	LH REQ.	RH REQ.
	.020 X 15 X 7	ALCLAD	47A8-A								

PARTS LIST PER ASSY.

AC

NAVY SR-53

HEAT TREAT

Z-P-2AP

FINISH

DRAFT 3-8-40

CHECK

STRUCT

MAT.

APPROV.

ENGR.

OPP. HAND NONE

NAME RIB-RUDDER-STA. 85-NOSE

CONSOLIDATED AIRCRAFT CORP. SAN DIEGO, CALIF.

DWG. SIZE D

28T5027

LET	ALTERATION	DATE	BY
A	ADDED ALTERNATE METH. OF FLANGING TO DWG.	11/15/40	Lloyd

E.O. 1901 A

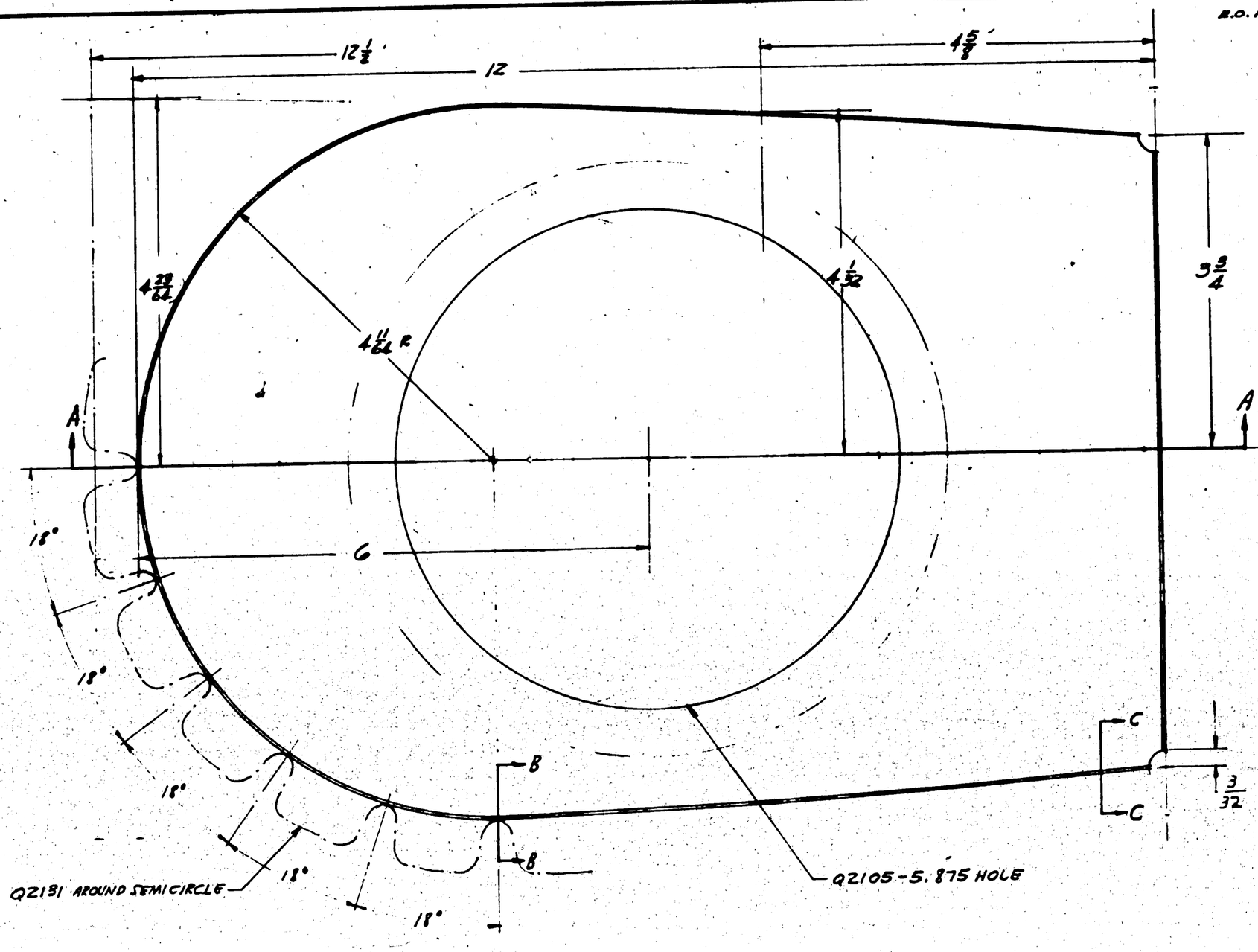

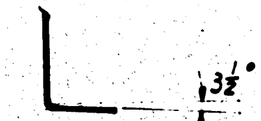

SECTION B-B

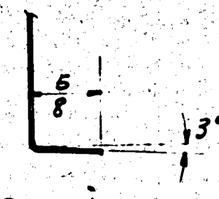

SECTION C-C

FINISH C...	
Z	ANODIC TREATMEN.
P	P-27 PRIMER
AP	ALUMINIZED PRIMER
C	CADMIUM PLATE

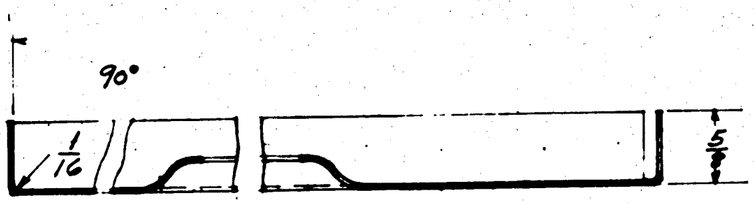

SECTION A-A

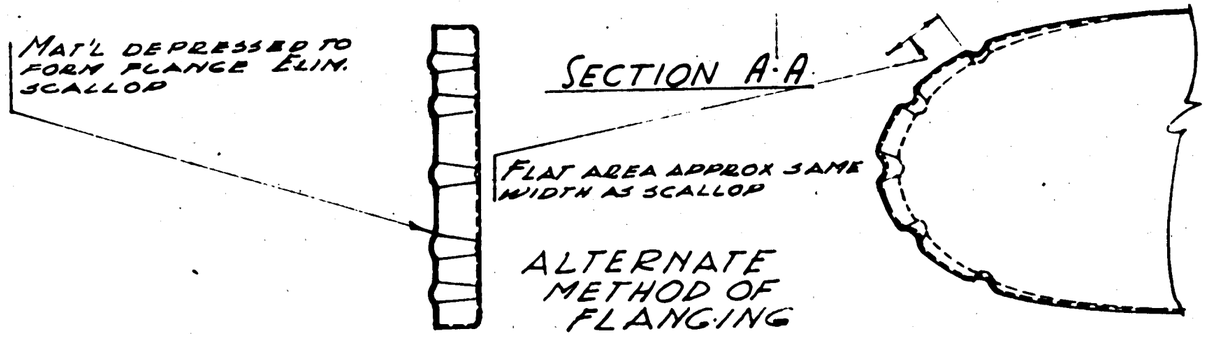

ALTERNATE METHOD OF FLANGING

ASSY DASH No.	MODEL	NEXT ASSY.	REQ.
	PBY-5B	28T5005	1
	PBY-5A	28T5005	1
	PBY-5	28T5008	1

REQUIREMENTS PER AIRPLANE

REPLACES — CALC WT.

REPLACED BY — ACT. WT.

LIMIT OF DIMENSIONS UNLESS OTHERWISE SPECIFIED ± 1/32 — SCALE FULL SIZE

STAMP PART NUMBER WHERE SHOWN

PART No.	STOCK	MATERIAL	SPEC.	LH REQ.	RH REQ.	LH REQ.	RH REQ.	LH REQ.	RH REQ.	LH REQ.	RH REQ.	LH REQ.	RH REQ.
	.032 x 14 x 18	ALCLAD	47A8-A										
PARTS LIST PER ASSY.				-0		-2		-3		-4		-5	

AC		POWER	S.					
NAVY SR-53	Z-P-2AP	3-8-40	DRAFT	CHECK	STRUCT	MAT.	APPROV	ENGR.
HEAT TREAT	FINISH							

NAME RIB-RUDDER-STA. 99 LOWER NOSE

OPP. HAND NONE

CONSOLIDATED AIRCRAFT CORP. SAN DIEGO, CALIF.

DWG. SIZE D — 28T5028

LET	ALTERATION	DATE	BY
A	ADDED ⅜ DIA. DRAIN HOLE	4/16/40	AR
B	1 13/32 AT VIEW A-A @ 2 7/16 DIM. AT VIEW B-B INCRS. MINOR DIM.	5/16/40	[illegible]

NORTHROP LETTER 5-16-40

DETERMINE ANGLE FROM LOFT

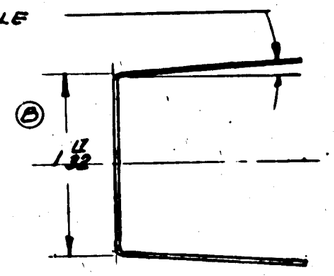

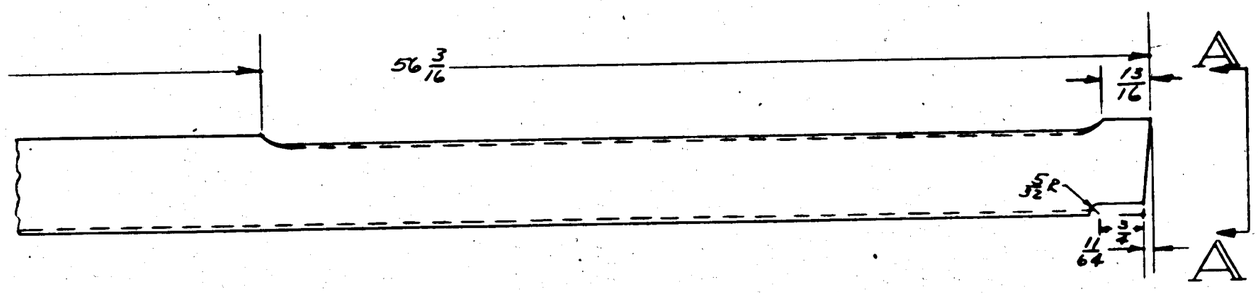

VIEW A-A
SCALE 12"=1'-0"

40 29/32

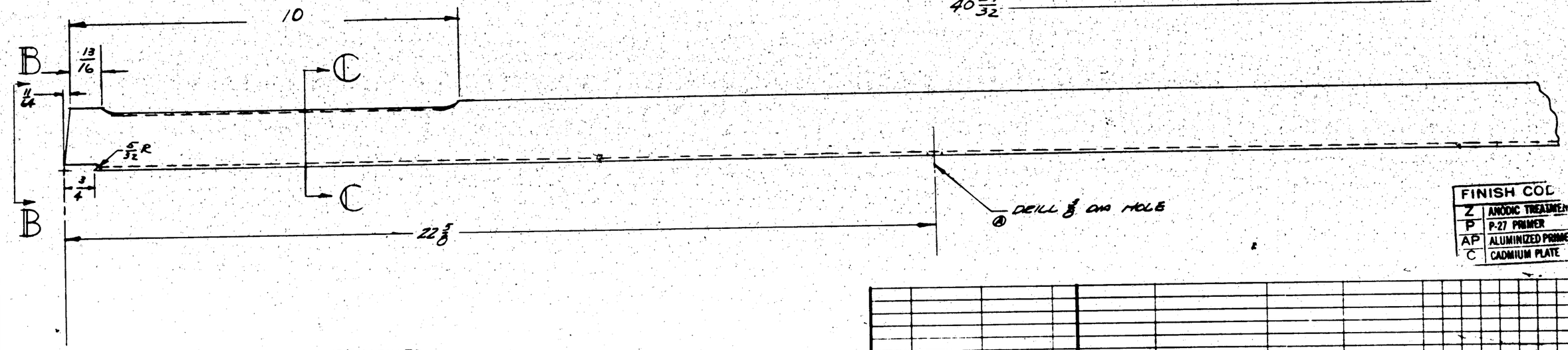

FINISH COD

Z	ANODIC TREATMEN
P	P-27 PRIMER
AP	ALUMINIZED PRIMER
C	CADMIUM PLATE

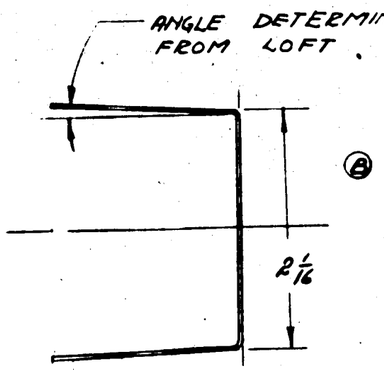

VIEW B-B
SCALE 12"=1'-0"

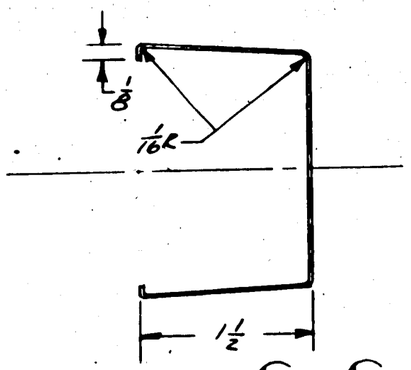

SECTION C-C
SCALE 12"=1'-0"

ASSY. DASH NO.	MODEL	NEXT ASSY.	REQ.
	PBY-5B	28T5005	1
	PBY-5A	28T5005	1
	PBY-5	28T5005	1

REQUIREMENTS PER AIRPLANE

REPLACES — CALC WT.

REPLACED BY — ACT. WT.

UNLESS OTHERWISE SPECIFIED: ± ½ — SCALE 6"=1'-0" & NOTED

STAMP PART NUMBER WHERE SHOWN

PART No.	STOCK	MATERIAL	SPEC.	LH REQ. -0	RH REQ. -2	LH REQ. -3	RH REQ. -4	LH REQ. -5	RH REQ.
	.032 x 8 x 44	24ST ALC	4TAA T	1					

PARTS LIST PER ASSY.

AC					
NAVY NONE	Z-P-2AP				
HEAT TREAT	FINISH	DRAFT	CHECK	STRUCT	MAT.	APPROV	ENG.
		3-11-40			4/8/40		

OPP. HAND NONE

NAME SPAR - RUDDER TAB

CONSOLIDATED AIRCRAFT CORP. SAN DIEGO, CALIF.

SIZE D — 28T5032

PBY-5
28SME, F } NORTHROP E.O. 549

LET	ALTERATION	DATE	BY
A	7/8 DIA. WAS 1 1/32 RAD.	9-16-40	[illegible]

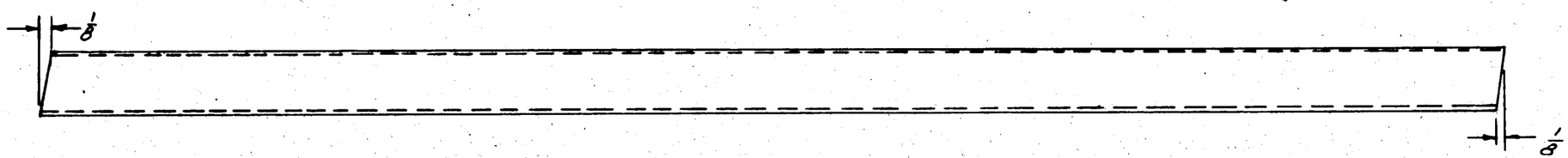

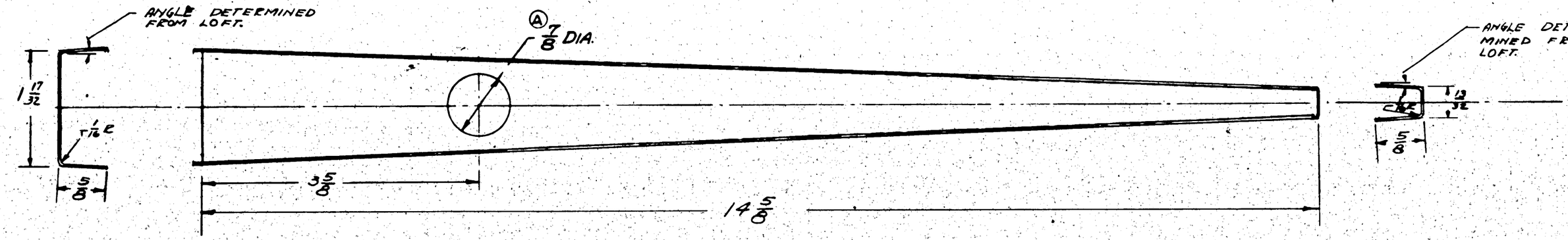

FINISH COL

Z	ANODIC TREATMEN
P	P-27 PRIMER
AP	ALUMINIZED PRIMER
C	CADMIUM PLATE

ASSY DASH No.	MODEL	NEXT ASSY	QTY
	PBY-5B	28T5036	1
	PBY-5A	28T6037	1
	PBY-5	28T5037	1

REQUIREMENTS PER AIRPLANE

REPLACES — Calc Wt.

REPLACED BY — Act Wt.

LIGHT ON DRAWINGS SHOWS OR NUMBERS DRAWINGS — SCALE 12"=1'-0"

STAMP PART NUMBER WHERE SHOWN

PART No.	STOCK	MATERIAL	SPEC.	LH REQ. -0	RH REQ. -2	LH REQ. -3	RH REQ. -4	LH REQ. -5	RH REQ.
	.020x4x15	2ST ALC	47A8 T	1					

PARTS LIST PER ASSY.

AC								
NAVY NONE	Z-P-2AP	9-7-40	[illegible]		9/9/40	[illegible]	[illegible]	R
HEAT TREAT	FINISH	DRAFT	CHECK	STRUCT	MAT.	APPROV	ENG.	

NAME CHANNEL - RUDDER TAIL LIGHT FAIRING

OPP. HAND

CONSOLIDATED AIRCRAFT CORP. SAN DIEGO, CALIF.

DWG. SIZE D

28T5036

LET	ALTERATION	DATE	BY
A	MODED FLANGE AT UPPER HINGE LEFT SIDE		
B	CHG'D MAT'L FROM 2250 AL 1218-A TO 2257 AL 1218-T		
C	DIMENSIONS 3 3/8 WAS 3 1/2 & 1/4 WAS 1/8		

PBY-6
28-5 Nos
28-5 MAs
N
NAF Q2S54

NAF Q2S53
NAF Q2S54

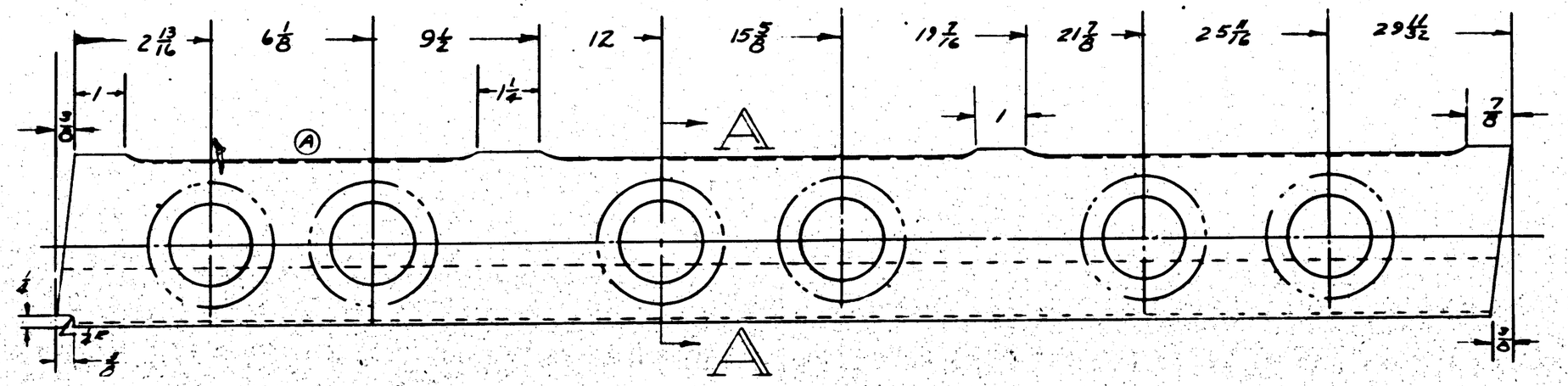

NOTE: ALL LIGHTENING HOLES TO BE Q2105-1625

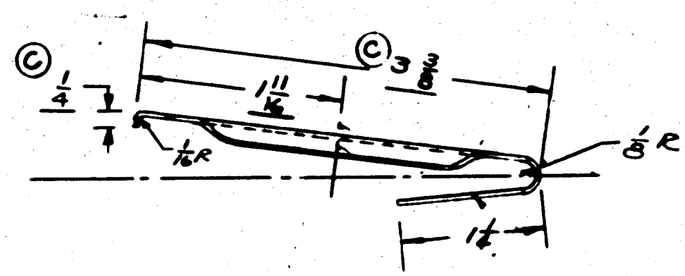

SECTION A-A
SCALE 12" = 1'-0"

FINISH
Z ANODIC TREATMENT
P P-27 PRIMER
AP ALUMINIZED PRIMER
C CADMIUM PLATE

ASSY DASH NO.	MODEL	NEXT ASSY
	PBY-5B	28T5005 1
	PBY-5A	28T5005 1
	PBY-5	28T5005 1

REQUIREMENTS PER AIRPLANE

REPLACES — CALC WT.

REPLACED BY — ACT WT.

LIGHT OR DIMENSIONS UNLESS OTHERWISE SPECIFIED: 1/2

SCALE 6" = 1'-0" & NOTED

STAMP PART NUMBER WHERE SHOWN

PART NO	STOCK	MATERIAL	SPEC.	LH REQ.	RH REQ.	LH REQ.	RH REQ.	LH REQ.	RH REQ.	LH REQ.	RH REQ.	LH REQ.	RH REQ.
B -6	.020 × 9 × 34	24ST. ALC.	AMS-T	1									

PARTS LIST PER ASSY. -0 -2 -3 -4 -5

AC
NAVY 3ES3 — Z-P-2 AIR
HEAT TREAT — FINISH

ENGINEERING: DRAFT 5-9-42 — CHECK — STRUCT. — MAT — APPROV — ENG

NAME TRAILING EDGE - RUDDER LOWER

OPP. HAND NONE

CONSOLIDATED AIRCRAFT CORP. SAN DIEGO, CALIF.

DWG. SIZE D — 28T5039

LET	ALTERATION	DATE	BY
A	#6BAS-048 ANCHOR NUTS ADDED & LOCATED. 4 HOLES IN FLANGE SHOWN. COVER CALLED OUT AS -6 NO. OF ASS'Y IS 28T5040	1/28/44	[illegible]

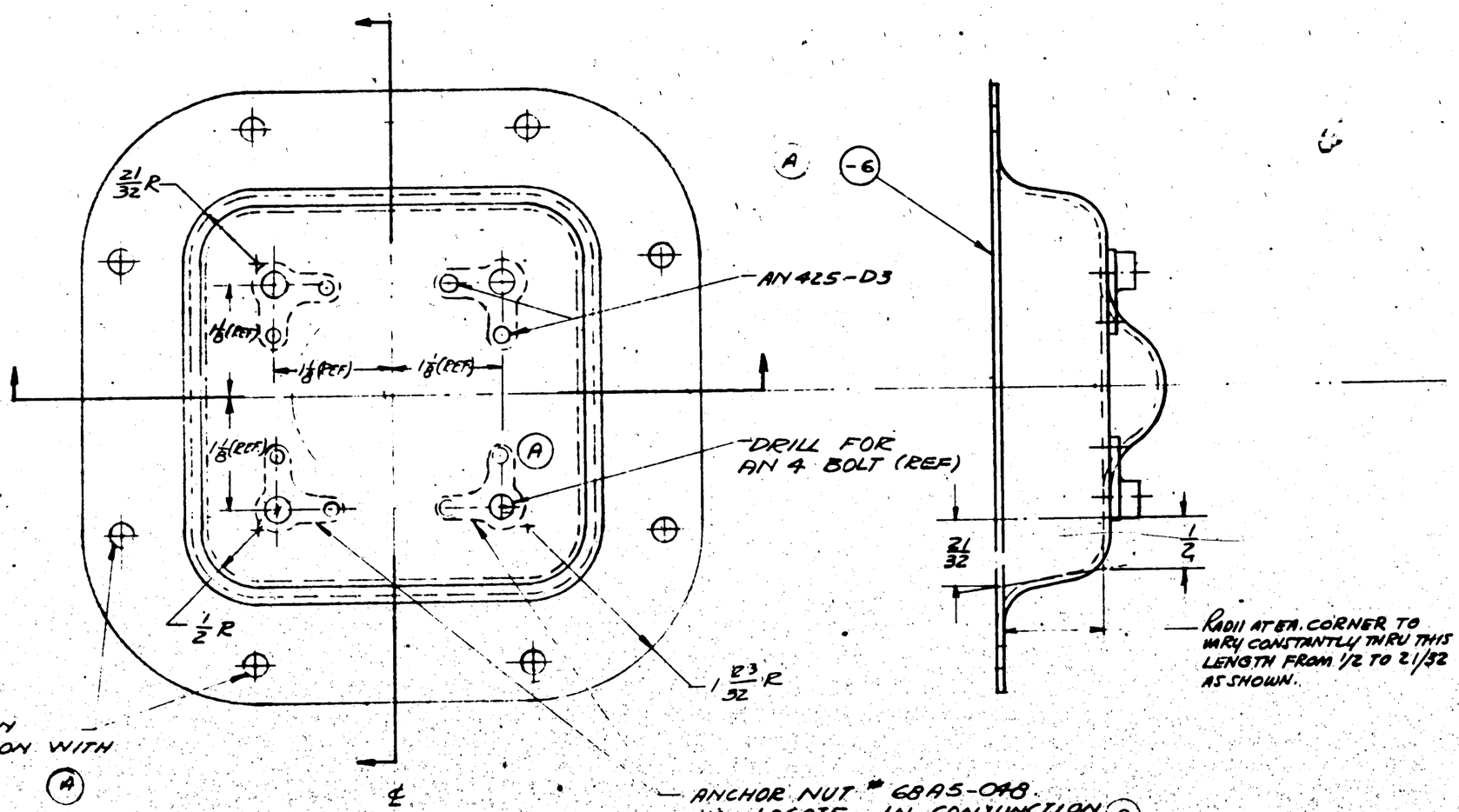
21/32 R
AN 425-D3
1 1/8 (REF)
1 1/8 (REF)
1 1/8 (REF)
DRILL FOR AN 4 BOLT (REF)
1/2 R
1 3/32 R
A
-6
21/32
1/2
RADII AT EA. CORNER TO VARY CONSTANTLY THRU THIS LENGTH FROM 1/2 TO 21/32 AS SHOWN.
DRILL 1/4 IN CONJUNCTION WITH 28T5096.
ANCHOR NUT # 6BAS-048. JIG LOCATE IN CONJUNCTION WITH HINGE LINE ℄ 28T2050
℄

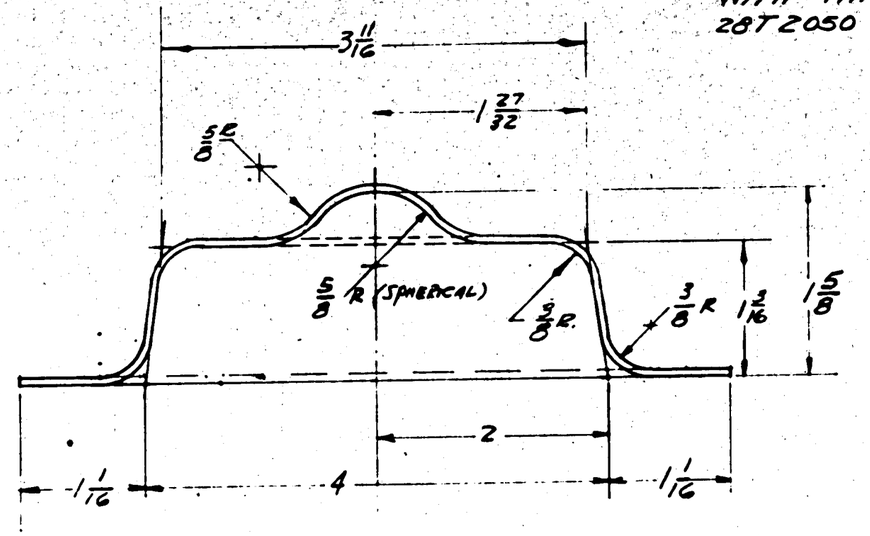

SECTION

FINISH CODE	
Z	ANODIC TREATMEN
P	P-27 PRIMER
AP	ALUMINIZED PRIMER
C	CADMIUM PLATE

ASSY DASH NO.	MODEL	NEXT ASSY	REQ
	PBY-5B	28T5096	1
	PBY-5A	28T5096	1
	PBY-5	28T5096	1

REQUIREMENTS PER AIRPLANE

REPLACES — CALC. WT.

REPLACED BY — ACT. WT.

LIGHT OR DISCONCEIVE UNLESS OTHERWISE SPECIFIED ± 1/32 — SCALE 12"=1'0"

STAMP PART NUMBER WHERE SHOWN

PART NO	STOCK	MATERIAL	SPEC.	LH REQ. -0	RH REQ. -0	LH REQ. -2	RH REQ. -2	LH REQ. -3	RH REQ. -3	LH REQ. -4	RH REQ. -4	LH REQ. -5	RH REQ. -5
AN425-D3 (A)													
6BAS-048 ANCHOR NUT	A												
-6	.040 X 12 X 12	ALCLAD	47A8-A	1									

PARTS LIST PER ASSY.

AC		DRAFT	CHECK	STRUCT	MAT	APPROV.	ENG
NAVY SR-53	Z-P-2AP	POWER 3-12-44		3/12-44	3/24	3/24	
HEAT TREAT	FINISH						

NAME COVER - RUDDER LOWER HINGE -

OPP HAND NONE

CONSOLIDATED AIRCRAFT CORP. SAN DIEGO, CALIF.

DWG. SIZE D — 28T5040

LET	ALTERATION	DATE	BY
A	5/8" BOSS NOW STRAIGHT, BOSS - 1/8 x 45° CHAMFER. WAS 1/8" R. (SHEET #2 ONLY)	3-8-40	SAVILLE
B	1/32 LIMIT WAS .010; REMOVED .3125 & ADDED 17/32 & 1 1/16; & 9/16 WAS 13/32.	10-16-40	COHEN
C	ADDED NOTE "1 1/4 DIA. --- METHOD."	10-16-40	COHEN

E.O. 26518

NORTHROP E.O. #45

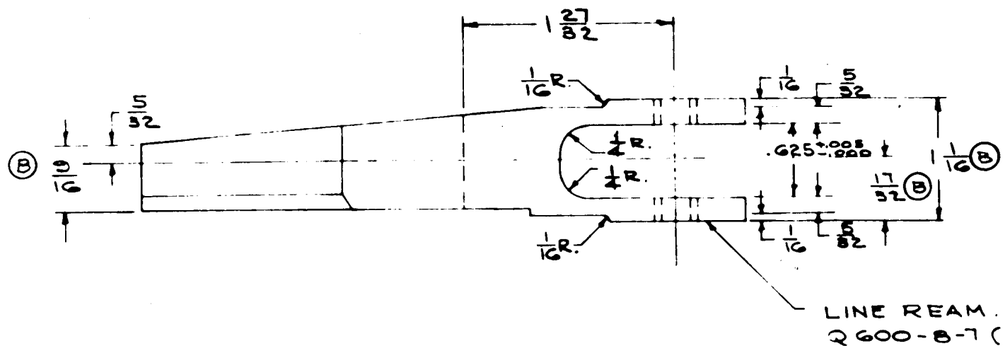

NOTE:
SMOOTH MACHINE FINISH ALL OVER.

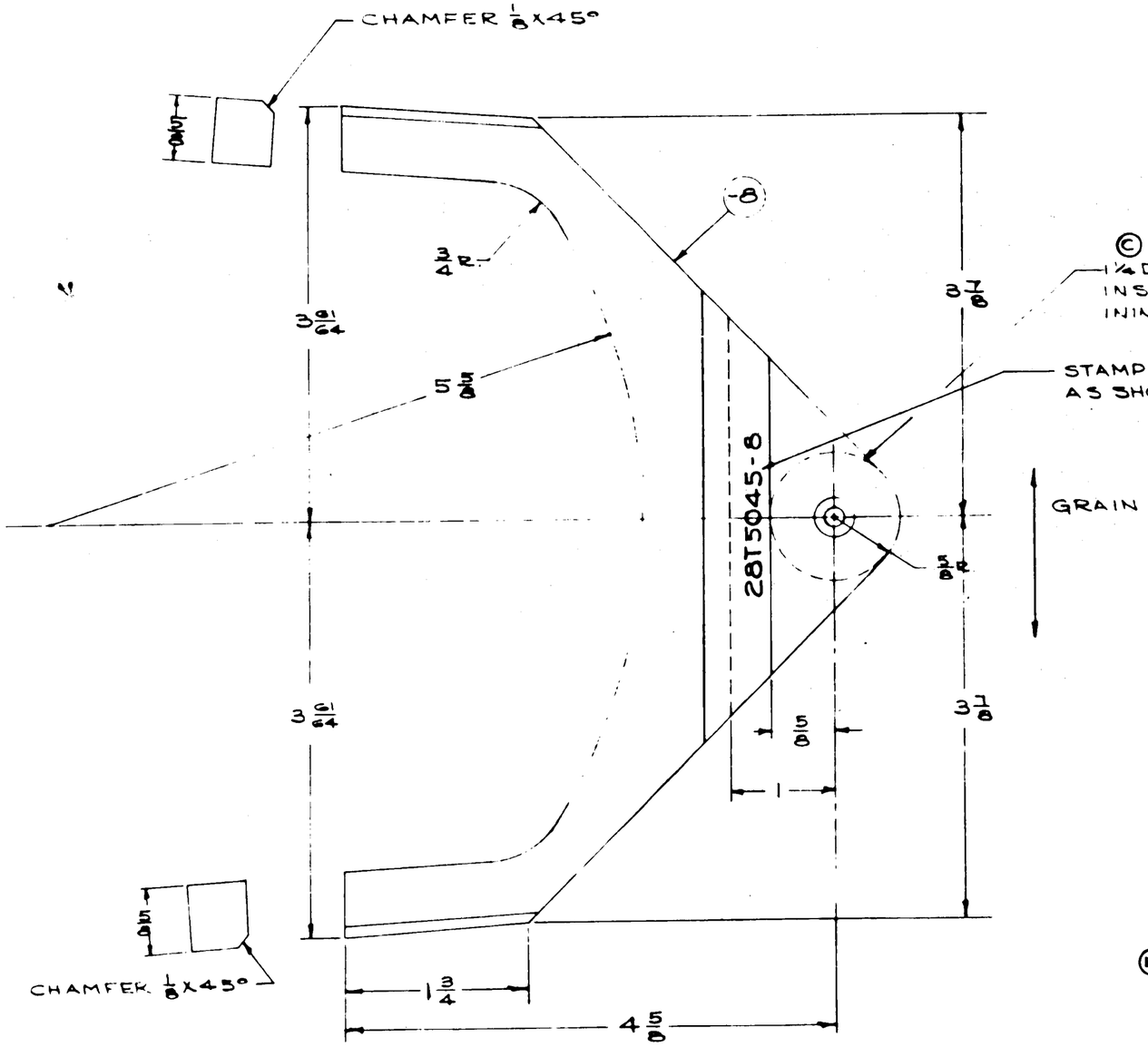

© 1 1/4 DIA LUG SHOWN DOTTED INSTEAD OF STRAIGHT MACHINING AS ALTERNATIVE METHOD.

STAMP PART NO. AS SHOWN

NOTE:
SHEET #1 OF THIS DRAWING SHOWS THE RUDDER HINGE AS MADE FROM -6 FORGING. THE MACHINED HINGE, -8, AS SHOWN IN SHEET 2 IS TO BE USED ONLY WHEN -6 FORGING IS NOT AVAILABLE.

FINISH CODE	
Z	ANODIC TREATMENT
P	P-27 PRIMER
AP	ALUMINIZED PRIMER
C	CADMIUM PLATE

ASSY. DASH NO.	MODEL	NEXT ASSY.	REQ.
	PBY-5	28T5002	1

REQUIREMENTS PER AIRPLANE

REPLACES — CALC WT.

REPLACED BY — ACT. WT.

LIMIT ON DIMENSIONS UNLESS OTHERWISE SPECIFIED ± 1/32 — SCALE 12" = 1'-0"

(D) STAMP PART NUMBER WHERE SHOWN

PART NO	STOCK	MATERIAL	SPEC.	LH REQ. -0	RH REQ. -2	LH REQ. -3	RH REQ. -4	LH REQ. -5	RH REQ.
-8		24ST BAR 4GA8T		1					
PARTS LIST PER ASSY.				2					

AC		DRAWN					
NAVY NONE	Z-P-2AP	4/24/40					E
HEAT TREAT	FINISH	DRAFT	CHECK	STRUCT	MAT	APPROV	ENG.

NAME HINGE BRACKET - FIN UPPER — OPP. HAND

CONSOLIDATED AIRCRAFT CORP. SAN DIEGO, CALIF.

DWG. SIZE D — 28T5045 SHEET #2 OF 2

LET	ALTERATION	DATE	BY
A	ADDED NOTE REGARDING ALTERNATE FLANGING		
B	Q2105-3.375 WAS Q2105-2.375 & Q2155-7-6.5. ADDED DIMS. 4 5/8 & 5 7/16. REMOVED DIMS. 3 5/16 & 2 5/16 & 4 3/16. WT. CHG. NEG.	10/26/42	

E.O.A 41.097

E.O. 19019

$\frac{5}{32}$ R.

$6\frac{1}{2}°$

$\frac{1}{2}$

$\frac{5}{8}$

$14\frac{3}{16}{}^{+.000}_{-.031}$

A

A

B

B

4

4.88

4.32

3.91

3.37

2.5

1.85

1.84 R.

2.35

1.18

14.10

9.40

7.05

4.70

SY'A ABOUT ℄

23°

43°

38°

Q 2131

Q2105 - 4.875

Q2105-3.375

$5\frac{13}{16}$

$4\frac{5}{8}$

$96\frac{1}{2}°$

SECTION A-A

102°

SECTION B-B

FINISH COD	
Z	ANODIC TREATMENT
P	P-27 PRIMER
AP	ALUMINIZED PRIMER
C	CADMIUM PLATE

NOTE
SEE DWG 28T5020
FOR ALTERNATE METHOD OF FLANGING

NOTE
1.) ALL BEND RADII 1/16
2.) FLANGE HOLES AND BEADS OPPOSITE TO CONTOUR FLANGES

ASSY. DASH NO.	MODEL	NEXT ASSY.	QTY.
	28-5AMN	28T5002	1
	PBY-5B		1
	28-5AMC		1
	28-5MN		1
	28-5ME		1
	28-5MC		1
	28-5MA		1
	PBY-5A		1
	PBY-5	28T5002	1

REQUIREMENTS PER AIRPLANE

REPLACES	.27 CALC. WT.
REPLACED BY	ASY. WT.
LIGHT OR SHADOWING UNLESS OTHERWISE SPECIFIED + 1/32	SCALE 12"=1'0"

STAMP PART NUMBER WHERE SHOWN

PART No.	STOCK	MATERIAL	SPEC.	LH REQ.	RH REQ.	LH REQ.	RH REQ.	LH REQ.	RH REQ.	LH REQ.	RH REQ.	LH REQ.	RH REQ.
PARTS LIST PER ASSY.	020-154 20	ALCLAD	4748-A	-0		-2		-3		-4		-5	

AC			DRAFT				
NAVY	Z-P-2AP	3-1-42					
HEAT TREAT	FINISH		CHECK	STRUCT	MAT.	APPROV	ENG.

OPP. HAND

NAME
NOSE RIB - UPPER FIN STA 29 5/8

CONSOLIDATED AIRCRAFT CORP. SAN DIEGO, CALIF.

DWG. SIZE D

28T5049

LET	ALTERATION	DATE	BY
A	ADDED NOTE RECALLING ALTERNATE FLANGING		
B	CREATED -2 ASSY FOR PBY-5 C.91876 (261 ON), & PBY-5A (CJ3595) ADDED WT.	10-26-42	HANTEN
C	ASSIGNED -7 TO PART FOR -2 ASS'Y, & -8 FOR COLLAR; -6 WAS -0 PART NO WT. CHG.	10-26-42	HANTEN

B.O. 1901 A

E.O. A62302

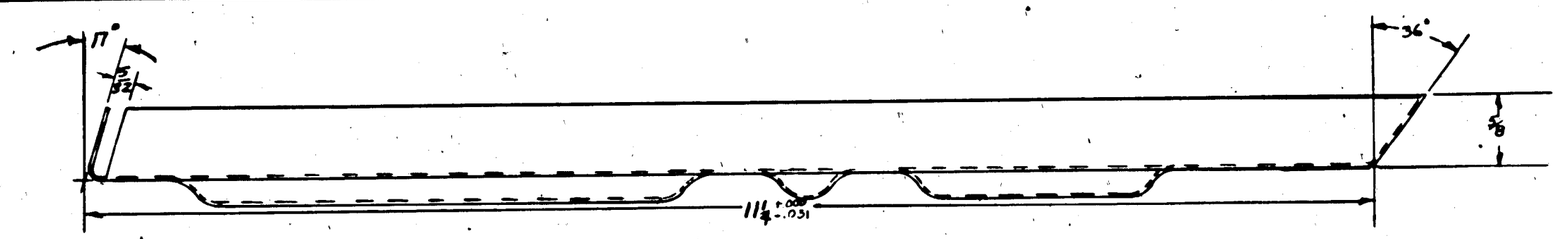

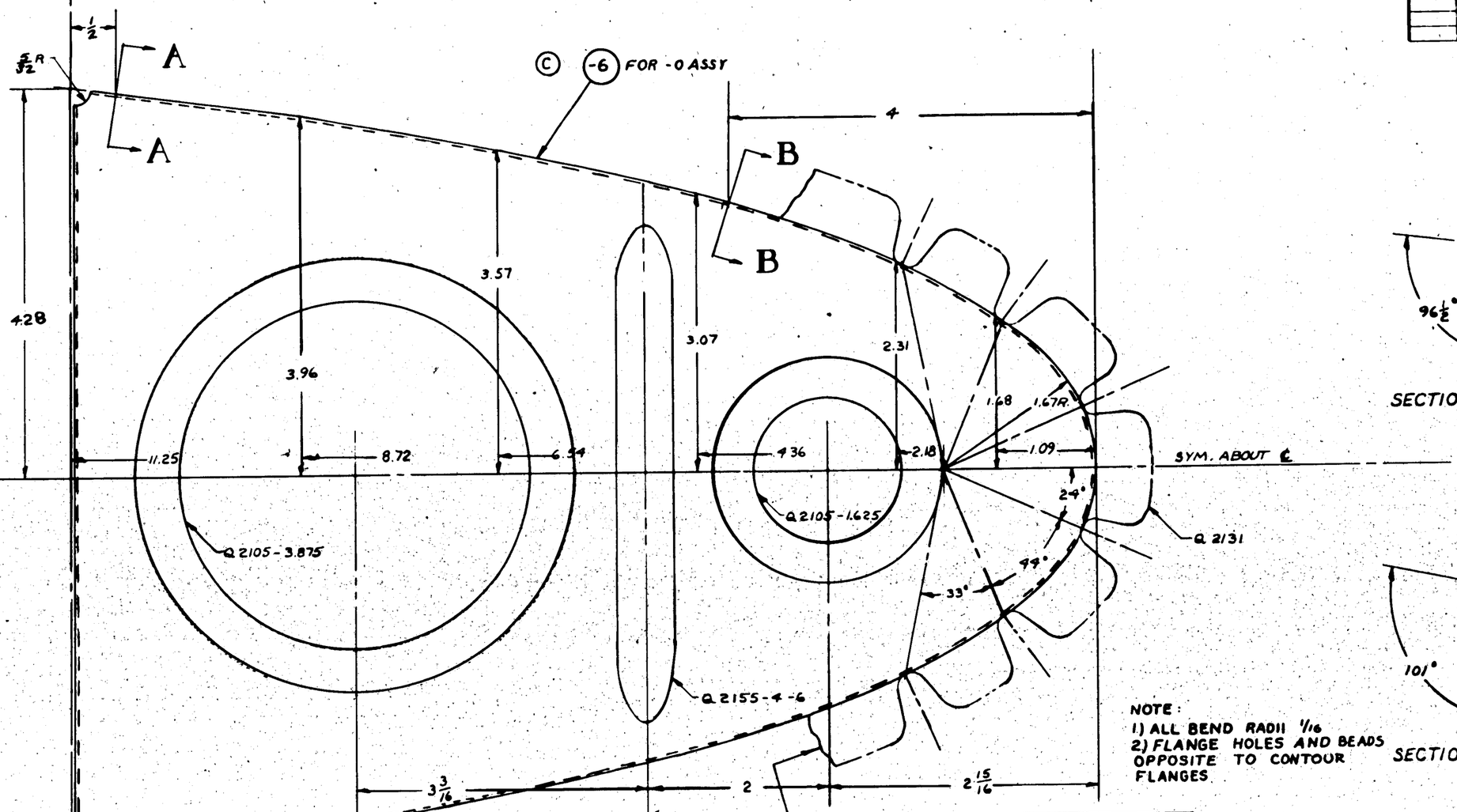

NOTE:
SEE DW'G 28T5020
FOR ALTERNATE METHOD OF FLANGING

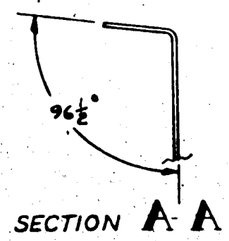

SECTION A-A

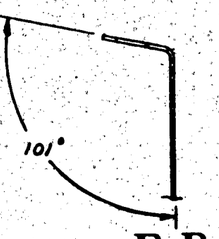

SECTION B-B

NOTE:
1) ALL BEND RADII 1/16
2) FLANGE HOLES AND BEADS OPPOSITE TO CONTOUR FLANGES.

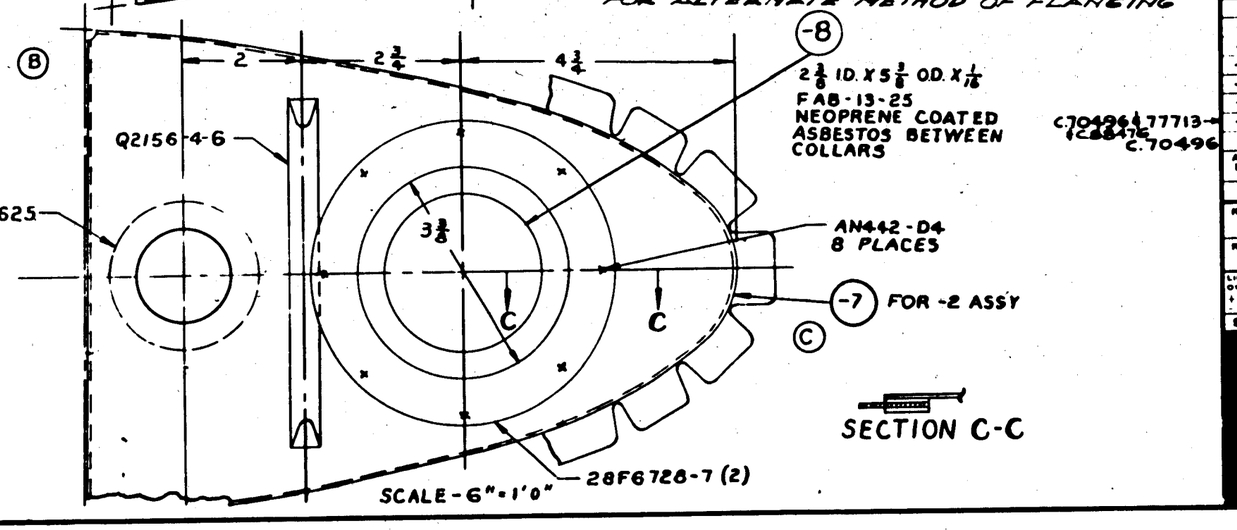

SECTION C-C

FINISH CODE

Z	ANODIC TREATMENT
P	P-27 PRIMER
AP	ALUMINIZED PRIMER
C	CADMIUM PLATE

ASSY DASH NO.	MODEL	NEXT ASSY	REQ.
-2	PBY-5	28T5002	1
-2	PBY-5A		1
-0	PBY-5B		1
-0	28-5AMN		1
-0	28-5AMC		1
-0	28-5MN		1
-0	28-5ME		1
-0	28-5MC		1
-0	28-5MA		1
-0	PBY-5A		1
-0	PBY-5	28T5002	1

REQUIREMENTS PER AIRPLANE

REPLACES	.16	CALC WT.
REPLACED BY		ACT. WT.
LIGHT OD DIMENSIONS UNLESS OTHERWISE SPECIFIED ± 1/64	SCALE 12"=1'0" & NOTED	

STAMP PART NUMBER WHERE SHOWN

AN442-D4

28F6728-7

PART No.	STOCK	MATERIAL	SPEC.	-0 REQ. LH	-0 REQ. RH	-2 REQ. LH	-2 REQ. RH	-3 REQ. LH	-3 REQ. RH	-4 REQ. LH	-4 REQ. RH	-5 REQ. LH	-5 REQ. RH
-8	NOTED						2						
-7	.020 X 14 X 17	ALCLAD	47A8-A				1						
-6	.020 X 14 X 17	ALCLAD	47A8-A	1									

PARTS LIST PER ASSY.

A C			Robinson				
NAVY	Z-P-2AP	3-2-43			3/13/43	3/15/43	
HEAT TREAT	FINISH	DRAFT	CHECK	STRUCT	MAT.	APPROV	ENG.

NAME
NOSE RIB - UPPER FIN STA 36 15/16

OPP. HAND

CONSOLIDATED AIRCRAFT CORP. SAN DIEGO, CALIF.

DWG. SIZE D

28T5050

R

LET	ALTERATION	DATE	BY
	E.O. 14014		
A	ADDED NOTE REGARDING ALTERNATE FLANGING		
	PBY-5 E.O. T959		
B	CHG'D DIMS. 7 25/32 I.R. WAS 7 25/32 I.R. 25° WAS 21½° 25° WAS 29° 7 27/64 WAS [illegible]		
	PBY-5 28-5ME 28-5MF NORTHROP E.O. 3XA		
C	CHG'D DIMS. 3 15/64 WAS 3 [illegible] 2 27/64 WAS 2 11/16, 1 21/32 WAS 1 11/16		
	E.O. P62365		
D	3 1/4 HOLE WAS Q2105-2-625 ADDED Q2156-4-6 & LOCATING DIM. 6 3/4 WT. CHG. NEG.	10-2-42	TRIMBLE

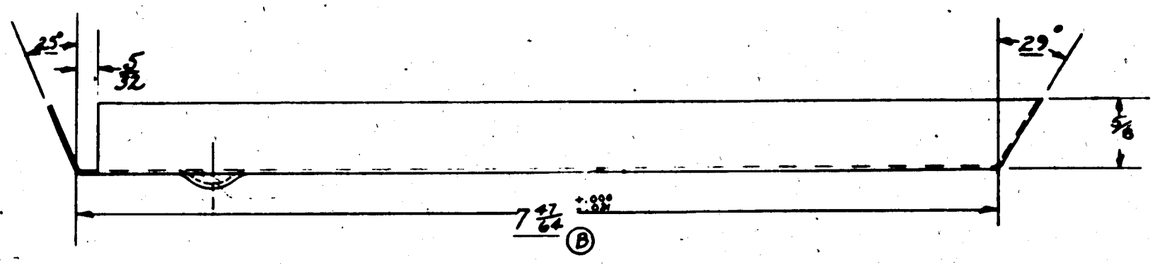

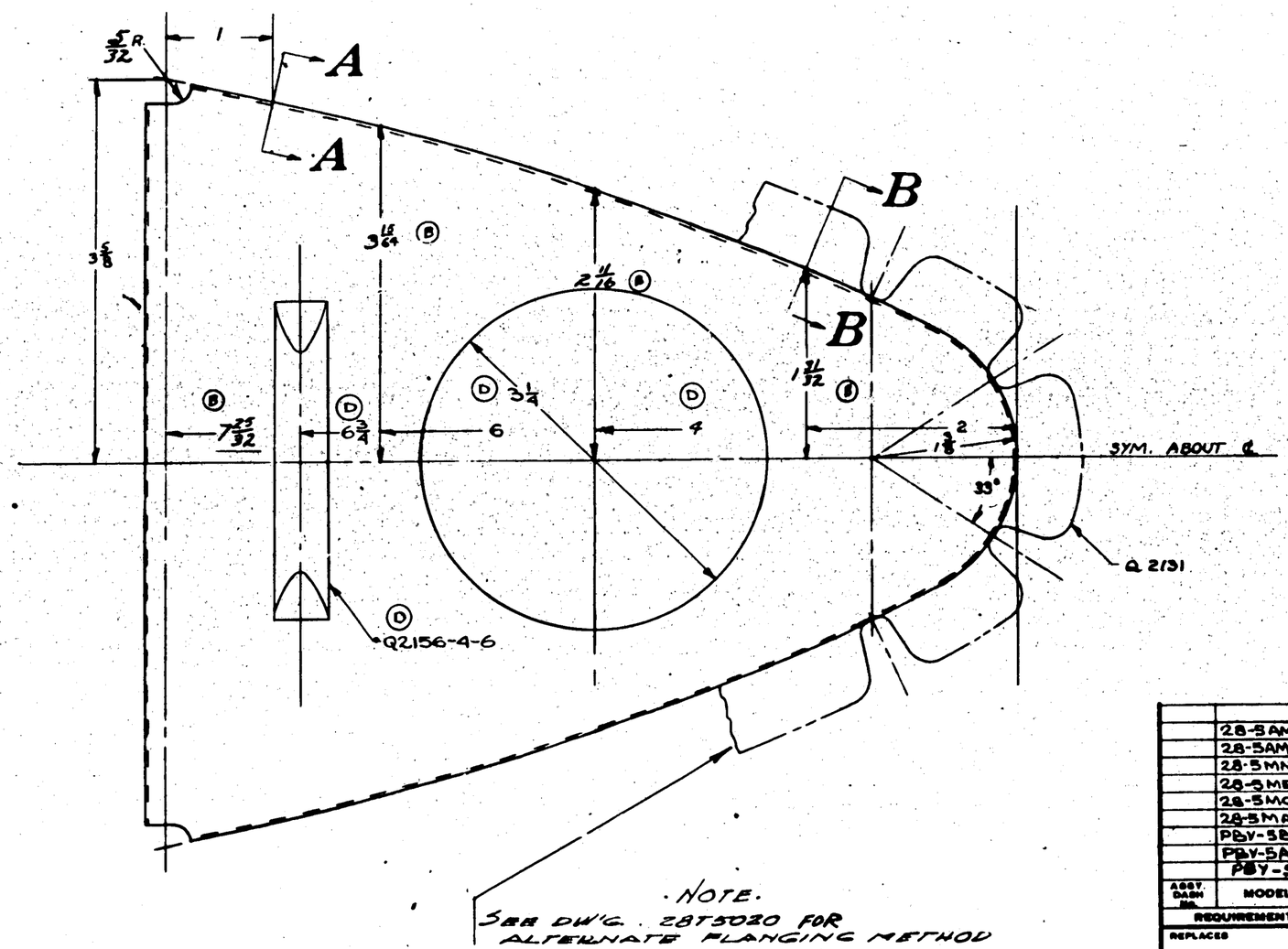

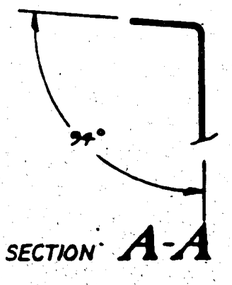

SECTION A-A

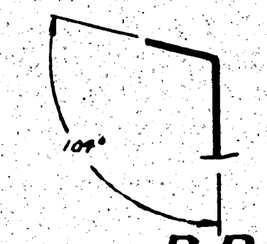

SECTION B B

NOTE.
SEE DW'G. 28T5020 FOR ALTERNATE FLANGING METHOD

NOTE:
1.) ALL BEND RADII 1/16
2.) FLANGE HOLES AND BEADS OPPOSITE TO CONTOUR FLANGES

FINISH CODE	
Z	ANODIC TREATMENT
P	P-27 PRIMER
AP	ALUMINIZED PRIMER
C	CADMIUM PLATE

ASSY. DASH No.	MODEL	NEXT ASSY.	REQ.
	28-5AMN	28T5002	1
	28-5AMC	28T5002	1
	28-5MN	28T5002	1
	28-5ME	28T5002	1
	28-5MC	28T5002	1
	28-5MA	28T5002	1
	PBY-5B	28T5002	1
	PBY-5A	28T5002	1
	PBY-5	28T5002	1

REQUIREMENTS PER AIRPLANE

REPLACES — CALC. WT.

REPLACED BY — ACT. WT.

LIMIT OR DECIMAL DIM. CODE: STRAIGHT DIMENSIONS ± 1/16 — SCALE 12" = 1'0"

STAMP PART NUMBER WHERE SHOWN

PART No.	STOCK	MATERIAL	SPEC.	LH REQ. -0	RH REQ. -2	LH REQ. -3	RH REQ. -4	LH REQ. -5	RH
	.020-15x14	ALCLAD	2024-A						

PARTS LIST PER ASSY.

A C		Robert					
NAVY	Z-P-AP	10-5-42					
HEAT TREAT	FINISH	DRAFT	CHECK	STRUCT.	MAT.	APPROV.	ENG.

NAME: TIP SPAR-UPPER FIN-FRONT — OPP. HAND

CONSOLIDATED AIRCRAFT CORP. SAN DIEGO, CALIF. — DWG. SIZE D — 28T5056

LET	ALTERATION	DATE	BY
A	2 7/8 DIM. WAS 3 1/4. WT. NO NEG.	4-3-42	GENDER

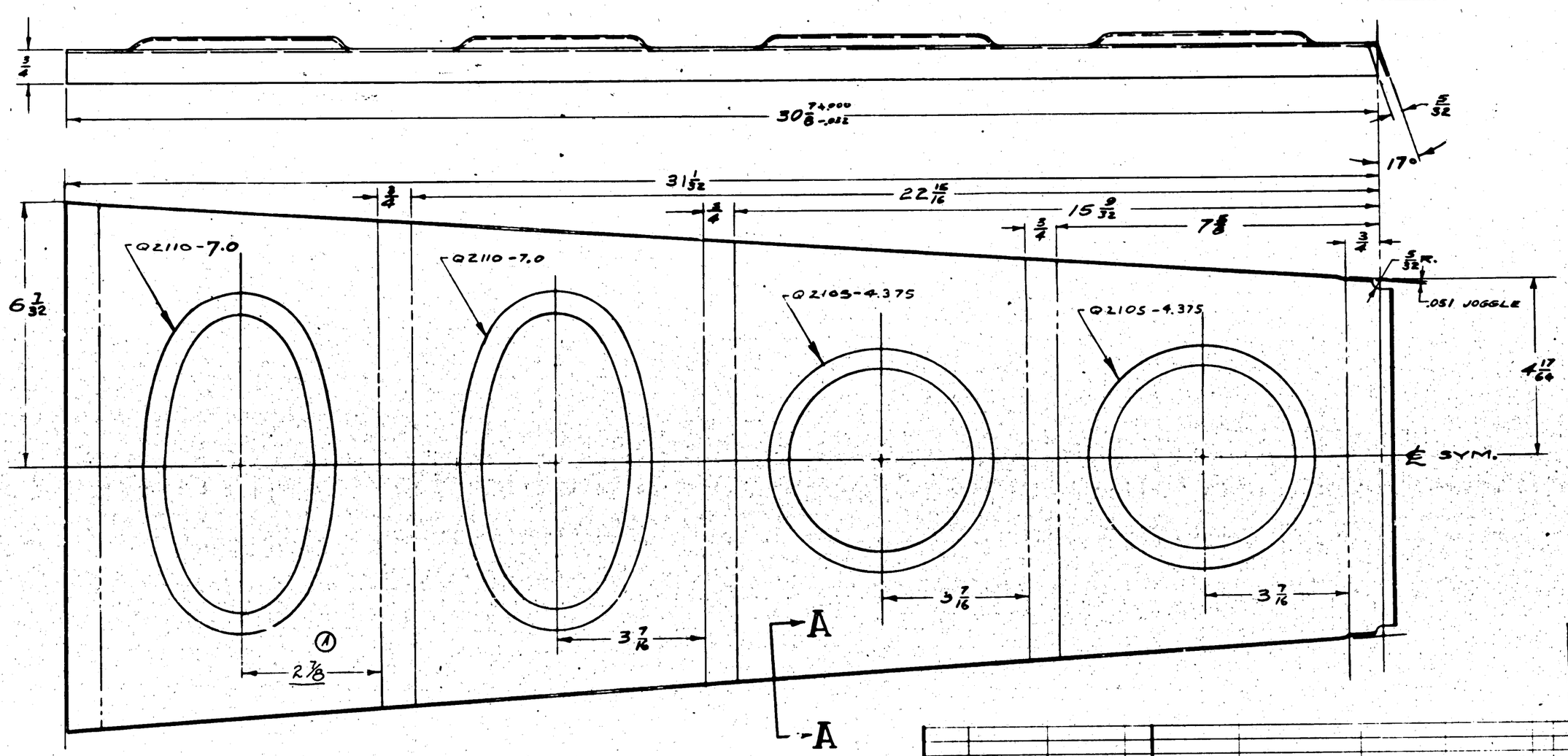

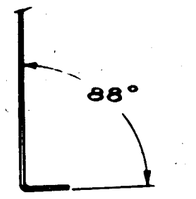

SECTION A-A

NOTE: FLANGE HOLES OPPOSITE TO CONTOUR FLANGES.
ALL BEND RADII 1/8.

ASSY DASH NO.	MODEL	NEXT ASSY	REQ
28-5 ALL	28T5002		1
PBY-5A, 5B	28T5002		1
PBY-5	28T5002		1

REQUIREMENTS PER AIRPLANE

REPLACES — CALC WT.

REPLACED BY — ACT WT

LIMIT ON DIMENSIONS UNLESS OTHERWISE SPECIFIED ± 1/64 — SCALE 6"=1'0"

STAMP PART NUMBER WHERE SHOWN

PART No.	STOCK	MATERIAL	SPEC.	LH RH REQ. -0	LH RH REQ. -2	LH RH REQ. -3	LH RH REQ. -4	LH RH REQ. -5
	.064 X 18 X 36	ALCLAD	47A8-A					

PARTS LIST PER ASSY.

A.C.		Roves					
NAVY	Z-P-2AP	3-8-40		2/14/42	2/18/42		
HEAT TREAT	FINISH	DRAFT	CHECK	STRUCT	MAT.	APPROV	ENG.

NAME SPAR - UPPER FIN - REAR — OPP. HAND

CONSOLIDATED AIRCRAFT CORP. SAN DIEGO, CALIF. — DWG. D SIZE — 28T5062

FINISH CODE	
Z	ANODIC TREATMENT
P	P-27 PRIMER
AP	ALUMINIZED PRIMER
C	CADMIUM PLATE

R

LET	ALTERATION	DATE	BY

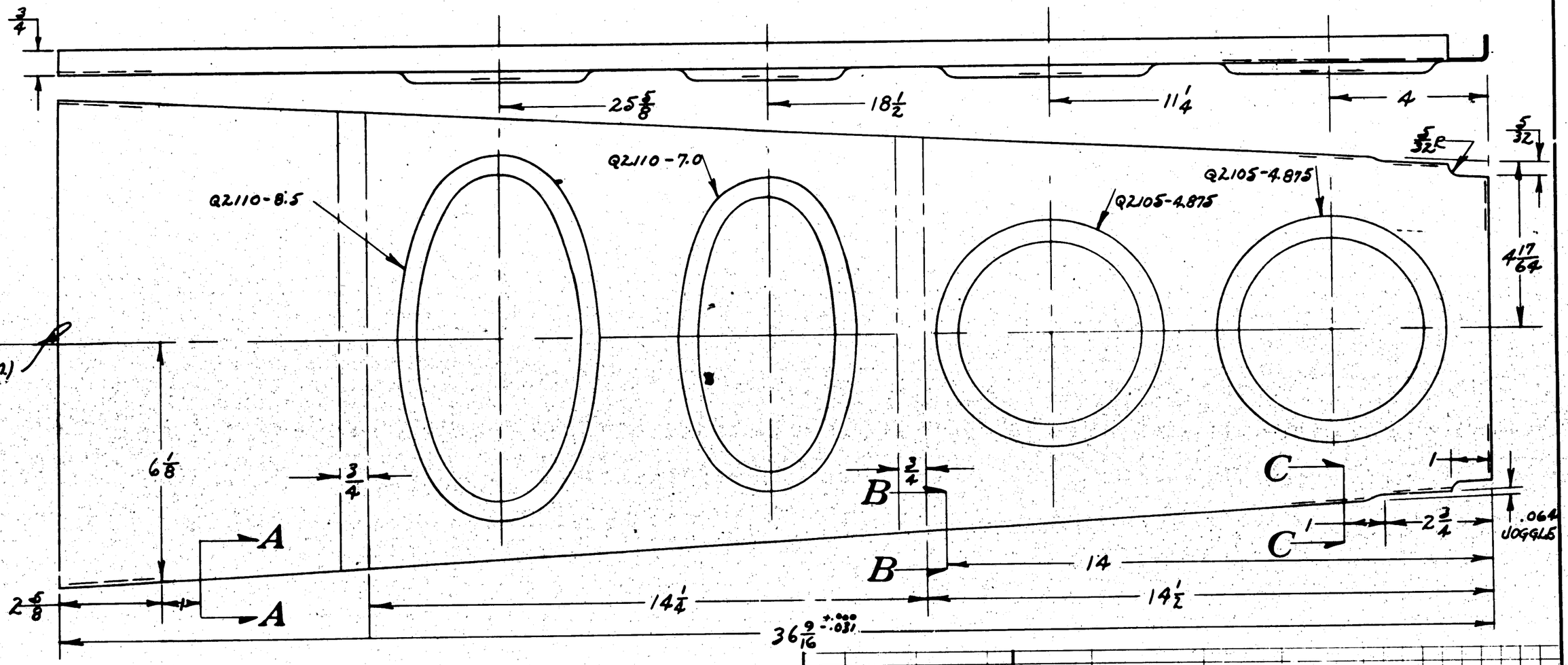

FINISH COL

Z	ANODIC TREATMENT
P	P-27 PRIMER
AP	ALUMINIZED PRIMER
C	CADMIUM PLATE

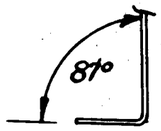

SECTION A A

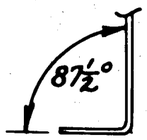

SECTION B B

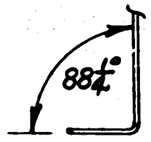

SECTION C C

NOTE:
ALL FLANGE HOLES OPPOSITE TO CONTOUR FLANGES.
ALL BEND RADII 1/16

ASSY DASH NO.	MODEL	NEXT ASSY	QTY
	PBY-5B	28T5002	1
	PBY-5A	28T5002	1
	PBY-5	28T5002	1

REQUIREMENTS PER AIRPLANE

REPLACES

REPLACED BY

CALC WT.

ACT WT.

UNLESS OTHERWISE SPECIFIED: 1/64 — SCALE: 6" = 1'-0"

STAMP PART NUMBER WHERE SHOWN

PART NO.	STOCK	MATERIAL	SPEC.	LH REQ. -0	RH REQ. -0	LH REQ. -2	RH REQ. -2	LH REQ. -3	RH REQ. -3	LH REQ. -4	RH REQ. -4	LH REQ. -5	RH REQ. -5
	.025 x 12 x 42	ALCLAD	47A8-A										

PARTS LIST PER ASSY.

A C / NAVY — HEAT TREAT

FINISH: Z-P-2AP

	DRAFT	CHECK	STRUCT.	MAT.	APPROV.	ENG.
	3-12-40			3/14/40	3/15/40	

OPP. HAND

NAME: SPAR - UPPER FIN TRAIL EDGE FAIRING

CONSOLIDATED AIRCRAFT CORP. SAN DIEGO, CALIF.

DWG. SIZE: D

28T5063

LET	ALTERATION	DATE	BY
A	8¾ DIM. WAS 9 -	10-16-40	CONVIN
B	9 DIM. WAS 9¾	1-6-41	[illegible]

NORTHROP E.O. 638 - PBY-5
NORTHROP E.O 638A

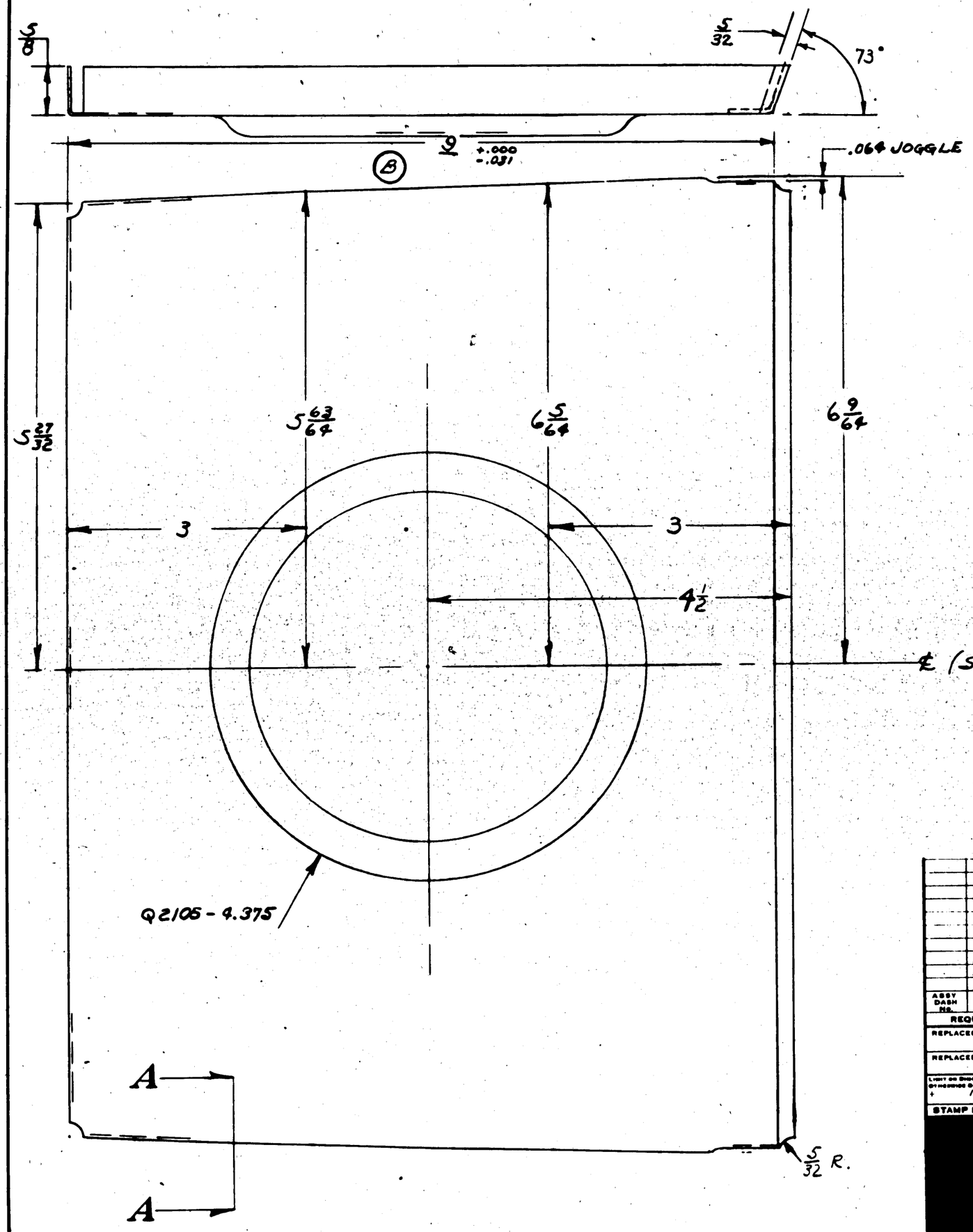

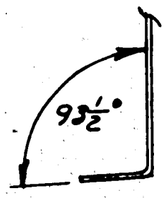

SECTION A A

NOTE -
ALL BEND RADII 1/2
FLANGE HOLE OPPOSITE
TO CONTOUR FLANGE

FINISH CODE	
Z	ANODIC TREATMENT
P	P-27 PRIMER
AP	ALUMINIZED PRIMER
C	CADMIUM PLATE

ASSY DASH NO.	MODEL	NEXT ASSY	QTY
	PBY-5A	28T5002	1
	PBY-5B	28T5002	1
	PBY-5	28T5002	1

REQUIREMENTS PER AIRPLANE

REPLACES — CALC WT

REPLACED BY — ACT WT

LIGHT OR SHADOWING WILL BE IN REVERSE OF PICTURE SHOWN: 1

SCALE: 12" = 1'-0"

STAMP PART NUMBER WHERE SHOWN

PART NO	STOCK	MATERIAL	SPEC.	LH REQ. -0	RH REQ. -0	LH REQ. -2	RH REQ. -2	LH REQ. -3	RH REQ. -3	LH REQ. -4	RH REQ. -4	LH REQ. -5	RH REQ. -5
	.020x15 X19	ALCLAD	47A8-A										

PARTS LIST PER ASSY.

AC								
NAVY	Z-P-2AP	DRAFT	CHECK	STRUCT	MAT.	APPROV	ENG.	
HEAT TREAT	FINISH							

NAME: BULKHEAD UPPER FIN TRAIL. EDGE

OPP. HAND

CONSOLIDATED AIRCRAFT CORP. SAN DIEGO, CALIF.

DWG. SIZE: D

28T5065

LET	ALTERATION	DATE	BY
A	4 3/8 DIM. WAS 4 17/32	10/4/40	COMEN
B	4 11/32 DIM. WAS 4 3/8 2 9/32 WAS 2 7/16, 42 3/32 WAS 4 5/16	1-6-41	Swanson

NOTE: DROP E.O. 634 - MYS
E.O-639 A

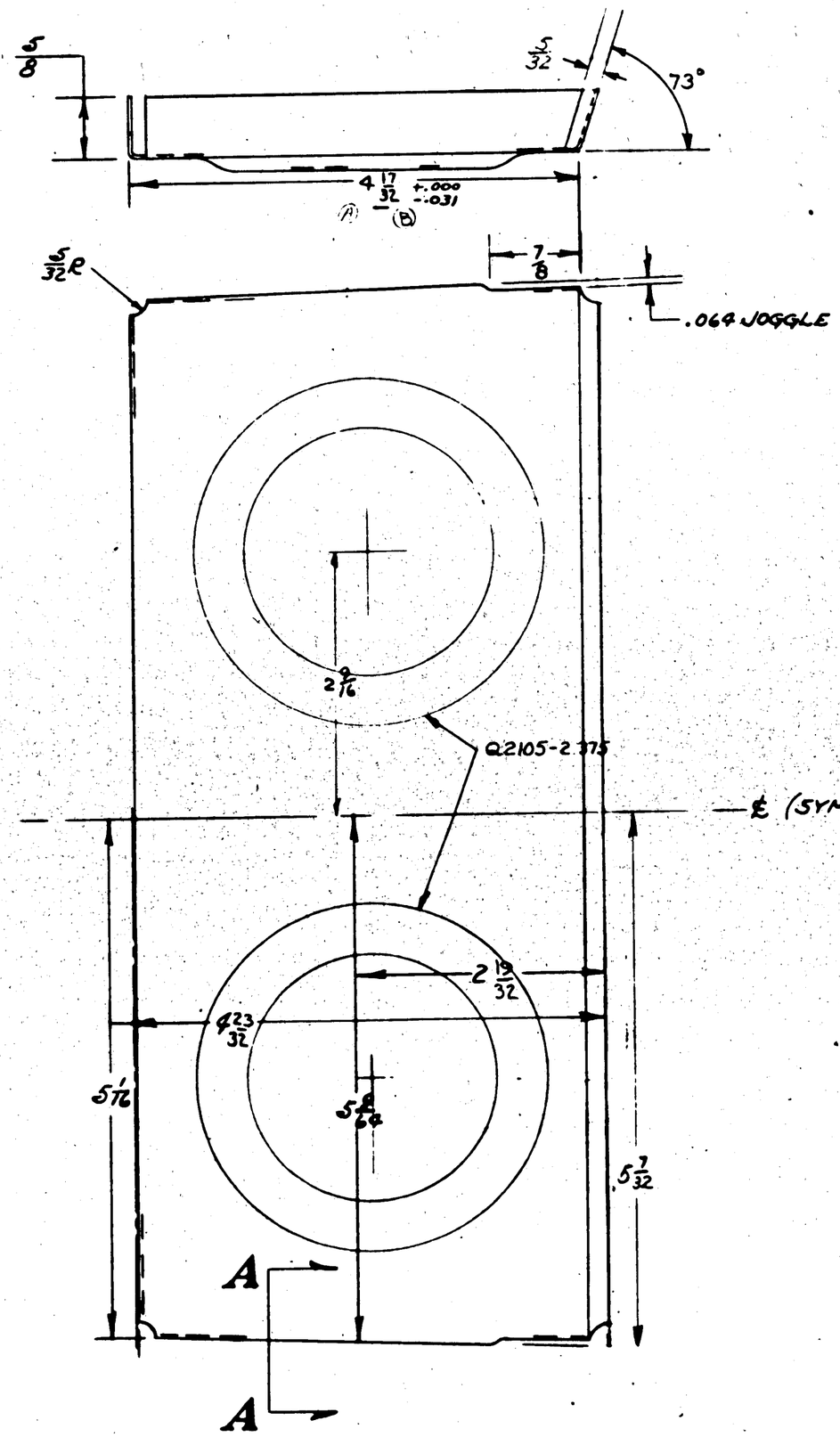

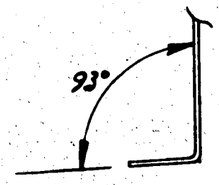

SECTION A A

NOTES
ALL BEND RADII 1/16
ALL FLANGE HOLES OPPOSITE TO CONTOUR FLANGES.

FINISH CODE

Z	ANODIC TREATMENT
P	P-27 PRIMER
AP	ALUMINIZED PRIMER
C	CADMIUM PLATE

ASSY DASH NO.	MODEL	NEXT ASSY	REQ
	PBY-5B	28T5002	1
	PBY-5A	28T5002	1
	PBY-5	28T5002	1

REQUIREMENTS PER AIRPLANE

REPLACES — CALC WT.
REPLACED BY — ACT. WT.
LIMIT ON DIMENSIONS UNLESS OTHERWISE SPECIFIED ± 1/64 — SCALE 12"=1'-0"
STAMP PART NUMBER WHERE SHOWN

PART NO.	STOCK	MATERIAL	SPEC.	LH REQ.	RH REQ.	LH REQ.	RH REQ.	LH REQ.	RH REQ.	LH REQ.	RH REQ.	LH REQ.	RH REQ.
	@.020X10X16	ALCLAD	97A8-A										
PARTS LIST PER ASSY.				-0		-2		-3		-4		-5	

AC		9-8-40					
NAVY	Z-P-AP						
HEAT TREAT	FINISH	DRAFT	CHECK	STRUCT	MAT.	APPROV	ENG.

NAME BULKHEAD UPPER FIN T.E.-UPPER
OPP. HAND
CONSOLIDATED AIRCRAFT CORP. SAN DIEGO, CALIF.
DWG. SIZE D
28T5066

NORTHROP E.O. # A1

LET	ALTERATION	DATE	BY
A	ADDED 3/16 R (SEC C-C)	6-8-40	[illegible]

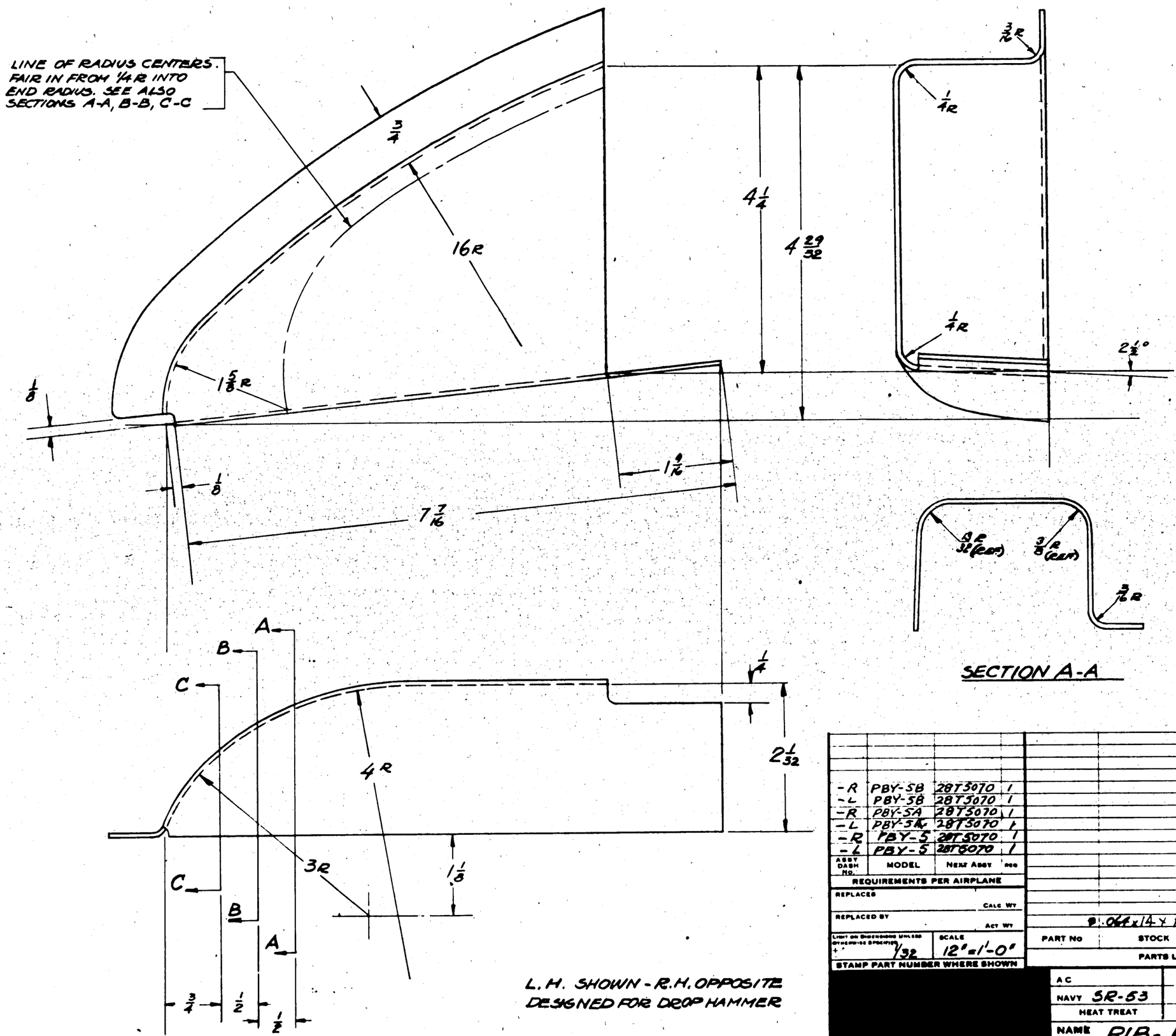

L.H. SHOWN - R.H. OPPOSITE
DESIGNED FOR DROP HAMMER

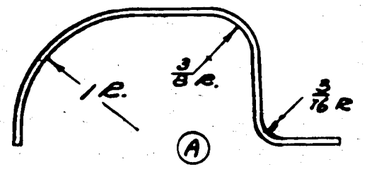

SECTION C-C

FINISH CODE	
Z	ANODIC TREATMENT
P	P-27 PRIMER
AP	ALUMINIZED PRIMER
C	CADMIUM PLATE

SECTION A-A

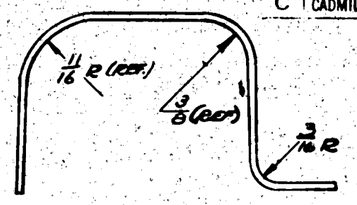

SECTION B-B

ASSY DASH NO.	MODEL	NEXT ASSY REQ
-R	PBY-5B	28T5070 1
-L	PBY-5B	28T5070 1
-R	PBY-5A	28T5070 1
-L	PBY-5A	28T5070 1
-R	PBY-5	28T5070 1
-L	PBY-5	28T5070 1

REQUIREMENTS PER AIRPLANE

REPLACES — CALC WT

REPLACED BY — ACT WT

LIGHT ON SHADOWBOX UNLESS OTHERWISE SPECIFIED — SCALE 1/32 — 12" = 1'-0"

STAMP PART NUMBER WHERE SHOWN

PART NO	STOCK	MATERIAL	SPEC	LH REQ. -0	RH REQ. -2	LH REQ. -3	RH REQ. -4	LH REQ. -5	RH REQ.
	.064 x 14 x 14	ALCLAD 3W. 47A 0	A						

PARTS LIST PER ASSY.

AC							
NAVY 5R-53	Z-P-2AP	3-5-40					
HEAT TREAT	FINISH	DRAFT	CHECK	STRUCT	MAT	APPROV	ENG

NAME RIB - RUDDER HORN SUPPORT

OPP HAND 28T5073-R

CONSOLIDATED AIRCRAFT CORP. SAN DIEGO, CALIF

DWG. SIZE D

28T5073

PBY-5 NORTHROP EO 1036

LET	ALTERATION	DATE	BY
A	6 1/16 DIM. WAS 6 1/32.	10-19-40	Condon

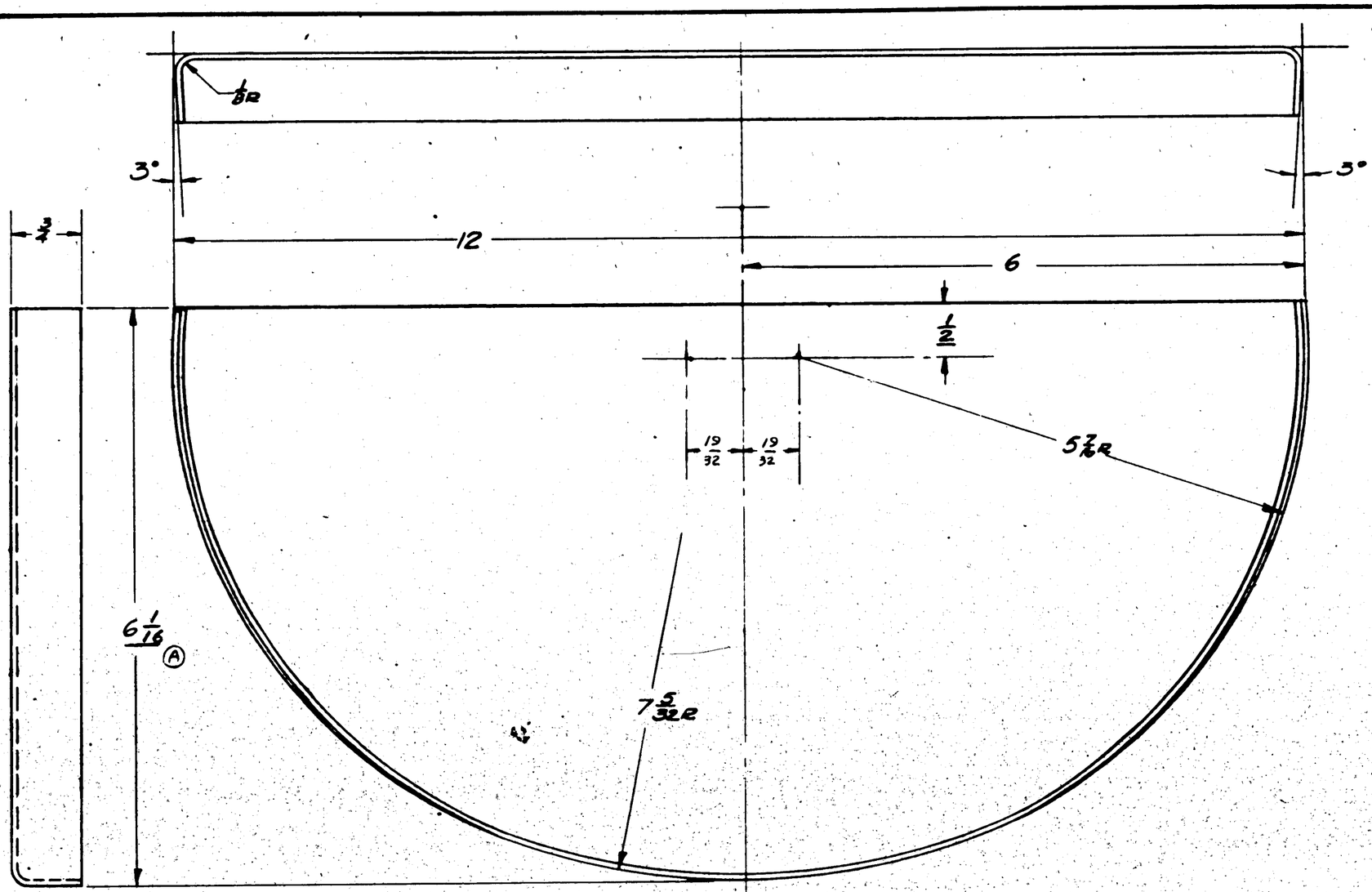

FINISH CODE	
Z	ANODIC TREATMENT
P	P-27 PRIMER
AP	ALUMINIZED PRIMER
C	CADMIUM PLATE

ASSY. DASH NO.	MODEL	NEXT ASSY.	REQ.
	PBY-5A	28T5070	1
	PBY-5B	28T5070	1
	PBY-5	28T5070	1

REQUIREMENTS PER AIRPLANE

REPLACES — CALC. WT.

REPLACED BY — ACT. WT.

LIGHT OR DISCREPANCY UNLESS OTHERWISE SPECIFIED + 1/32 −

SCALE 12"=1'-0"

STAMP PART NUMBER WHERE SHOWN

PART No.	STOCK	MATERIAL	SPEC.	LH REQ.	RH REQ.	LH REQ.	RH REQ.	LH REQ.	RH REQ.	LH REQ.	RH REQ.	LH REQ.	RH REQ.
	.064 X 11 X 18	ALCLAD SK2450	47A6 A										
PARTS LIST PER ASSY.				-0		-2		-3		-4		-5	

AC

NAVY SR-53 — Z-P-2AP

HEAT TREAT — FINISH

5-8-40 DRAFT — CHECK — STRUCT. — MAT. — APPROV. — ENG.

NAME RIB - TORQUE BOX - RUDDER - LOWER

OPP. HAND

CONSOLIDATED AIRCRAFT CORP. SAN DIEGO, CALIF.

SIZE D — 28T5074

R

LET	ALTERATION	DATE	BY

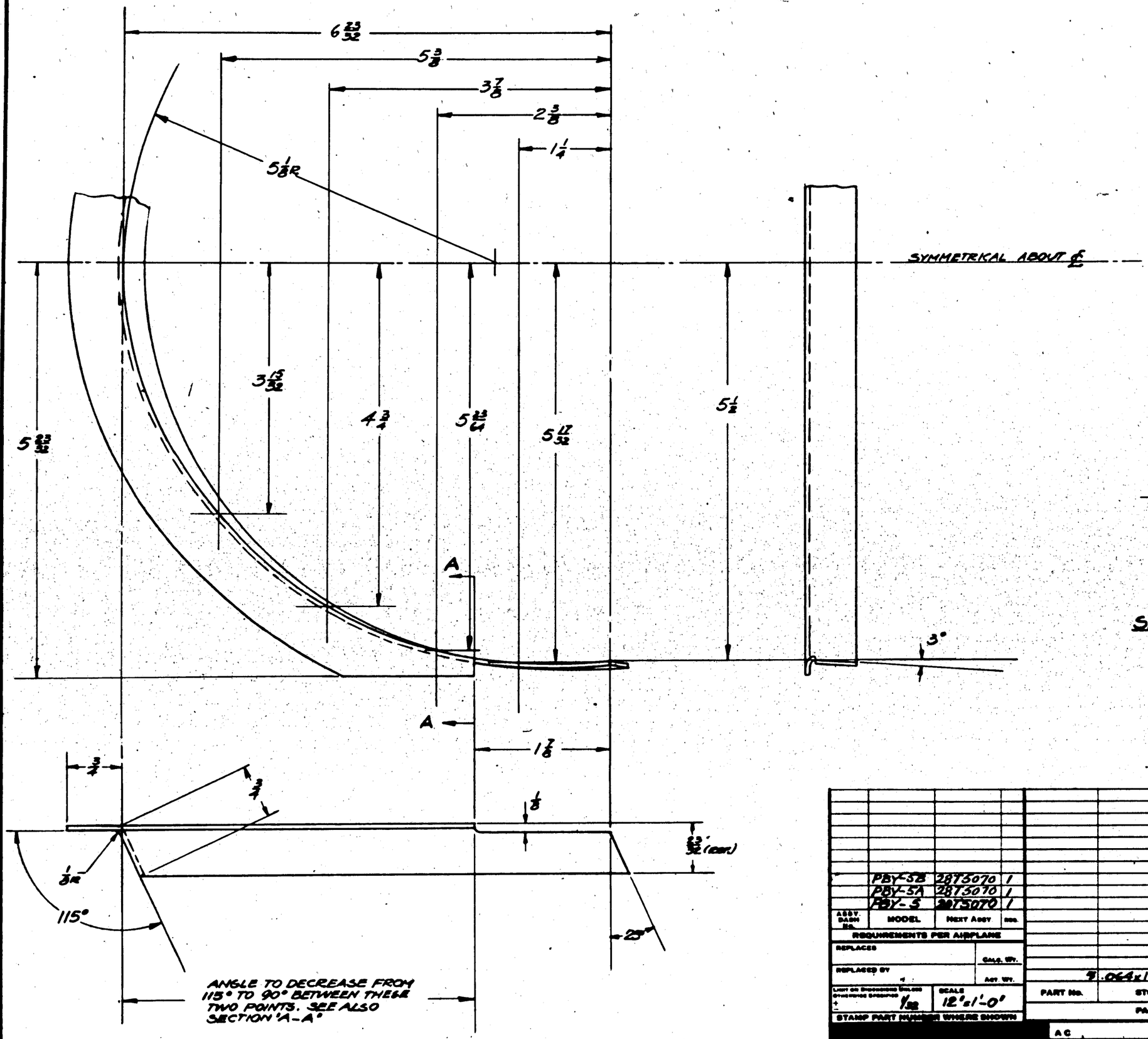

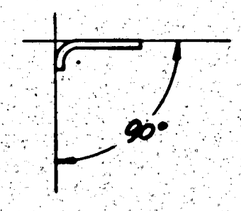

SECTION A-A

FINISH CODE	
Z	ANODIC TREATMENT
P	P-27 PRIMER
AP	ALUMINIZED PRIMER
C	CADMIUM PLATE

ASSY. DASH No.	MODEL	NEXT ASSY	QTY.
	PBY-5B	28T3070	1
	PBY-5A	28T3070	1
	PBY-5	28T3070	1

REQUIREMENTS PER AIRPLANE

REPLACES — GALS. QTY.

REPLACED BY — ACT. QTY.

LIMIT OF DIMENSIONS UNLESS OTHERWISE DESIGNATED ± 1/32 — SCALE 12"=1'-0"

STAMP PART NUMBER WHERE SHOWN

PART No.	STOCK	MATERIAL	SPEC.	LH REQ. -0	RH REQ. -2	LH REQ. -3	RH REQ. -4	LH REQ. -5	RH REQ.
PARTS LIST PER ASSY.									
	3.064x10x14	ALCLAD 24S-RT	47M A	1					

AC

NAVY 3R-33 — Z-P-2AP

HEAT TREAT — FINISH

DRAFT — CHECK — STRUCT — MAT. — ENGRG

NAME ANGLE-TORQUE BOX SUPPORTING - RUDDER

CONSOLIDATED AIRCRAFT CORP. San Diego, Calif.

OPP. HAND

SIZE D — DWG. 28T5075

R

COLUMBIA
EQA1065A

LET	ALTERATION	DATE	BY
A	ADDED 2 15/16 CUTOUT, 1/2 R (2) SECT. SC. WT. CHG. NEG.	5-15-42	

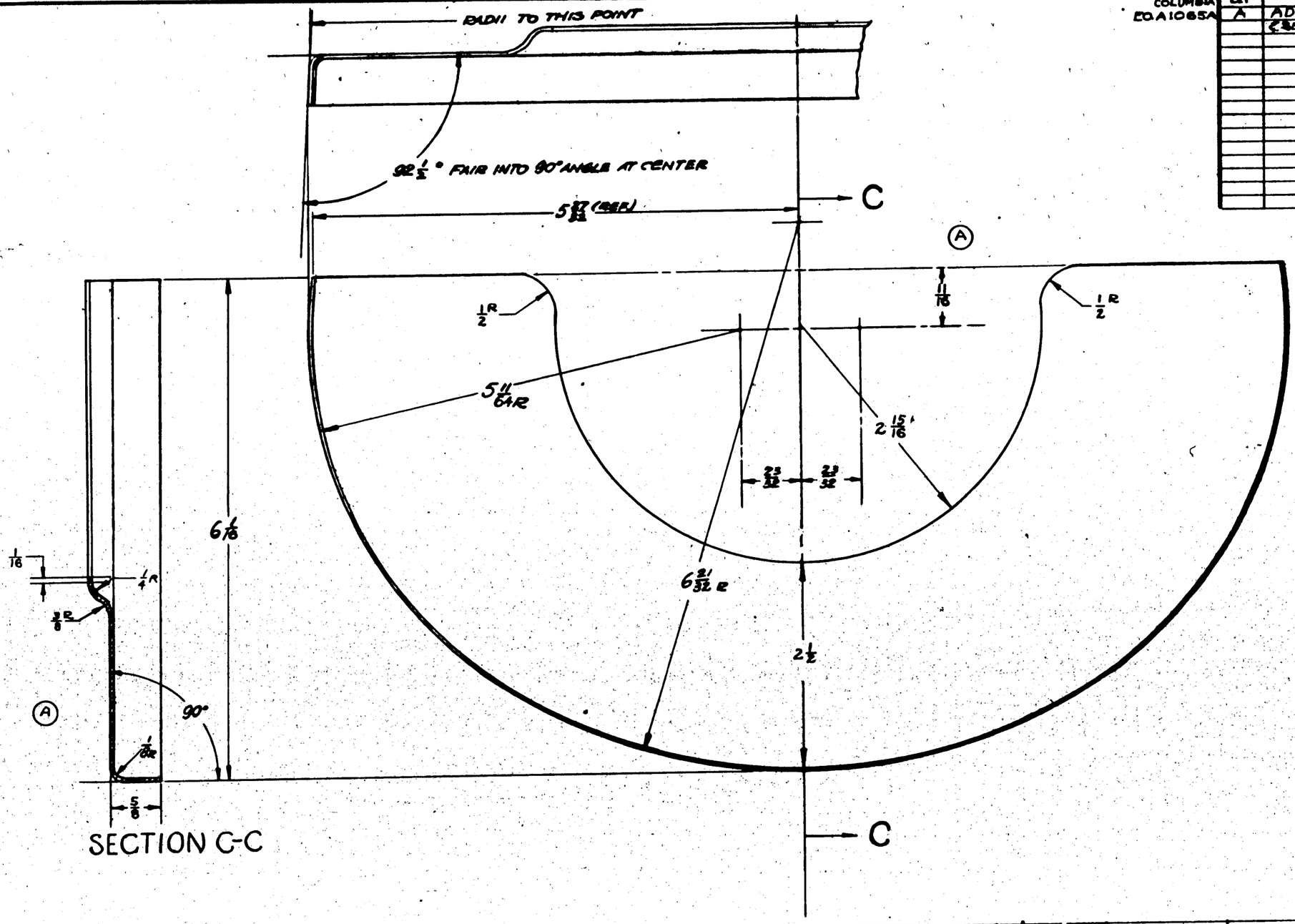

SECTION C-C

FINISH CODE	
Z	ANODIC TREATMENT
P	P-27 PRIMER
AP	ALUMINIZED PRIMER
C	CADMIUM PLATE

ASSY. DASH NO.	MODEL	NEXT ASSY.	QUAN.
	PBY-5B	28T5070	1
	PBY-5A	28T5070	1
	PBY-5	28T5070	1

REQUIREMENTS PER AIRPLANE

REPLACES — GALS WT.

REPLACED BY — ADV. WT.

SCALE: 12"=1'-0"

STAMP PART NUMBER WHERE SHOWN

PART NO.	STOCK	MATERIAL	SPEC.	LH RH REQ. -0	LH RH REQ. -2	LH RH REQ. -3	LH RH REQ. -4	LH RH REQ. -5
	.025 X 11 X 17	ALCLAD SH 24S0	4-3484					

PARTS LIST PER ASSY.

AC		DRAFT	CHECK	STRUCT.	MAT.	APPROVED	ENG.
NAVY SR-53	Z-P-2AP	5-18-42			5/21/42		
HEAT TREAT	FINISH						

NAME: RIB - RUDDER HORN TORQUE BOX - UPPER — OPP. HAND

CONSOLIDATED AIRCRAFT CORP. SAN DIEGO, CALIF.

DWG. SIZE: D — 28T5093

LET	ALTERATION	DATE	BY
1			

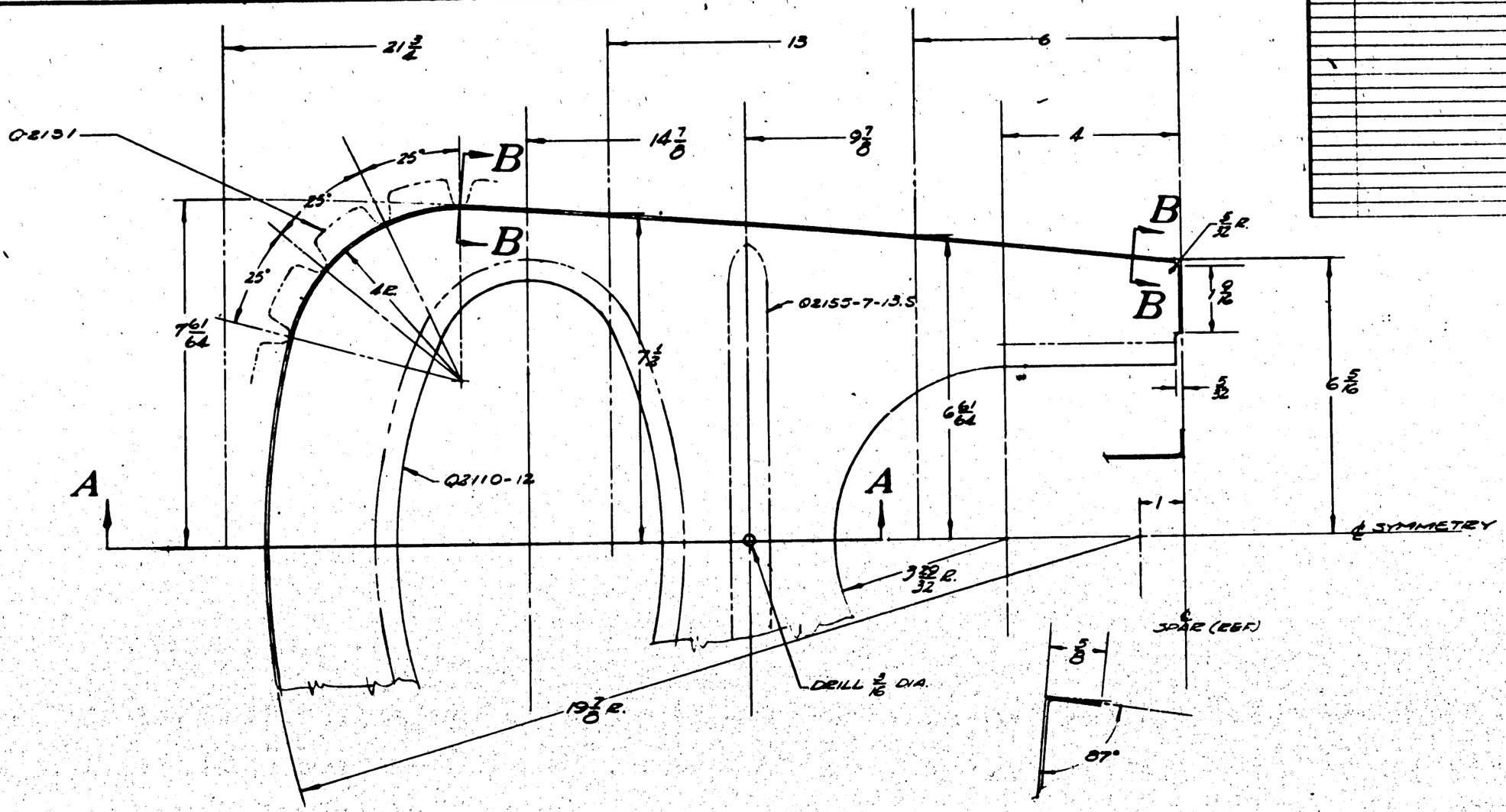

SECTION B-B
SCALE: 12" = 1'-0"

SECTION A-A
SCALE: 12" = 1'-0"

FINISH	
Z	ANODIC TREATMENT
P	P-27 PRIMER
AP	ALUMINIZED PRIMER
C	CADMIUM PLATE

ASSY DASH NO.	MODEL	NEXT ASSY.	REQ.
	PBY-5B	28T5005	1
	PBY-5A	28T5005	1
	PBY-5	28T5005	1

REQUIREMENTS PER AIRPLANE

REPLACES — CALC. WT.

REPLACED BY — ACT. WT.

UNLESS OTHERWISE SPECIFIED: ± 1/32 — SCALE 6" = 1'-0"

STAMP PART NUMBER WHERE SHOWN

PART NO.	STOCK	MATERIAL	SPEC.	LH REQ.	RH REQ.	LH REQ.	RH REQ.	LH REQ.	RH REQ.	LH REQ.	RH REQ.	LH REQ.	RH REQ.
	.040 X 21 X 26	2A50-A&C	4240 A										
PARTS LIST PER ASSY.										-0		-2	-3	-4	-5

AC							
NAVY 3C-33	Z-P-2AP	3-15-40	DRAFT	CHECK	STRUCT.	MAT.	APPROV	ENG.
HEAT TREAT	FINISH						

NAME RIB - RUDDER STA. 99 3/16 NOSE

CONSOLIDATED AIRCRAFT CORP. SAN DIEGO, CALIF.

OPP. HAND NONE

SIZE D — DWG. 28T5100

LET	ALTERATION	DATE	BY
F	TRACED NO WT. CHG.	10-2	FORBES

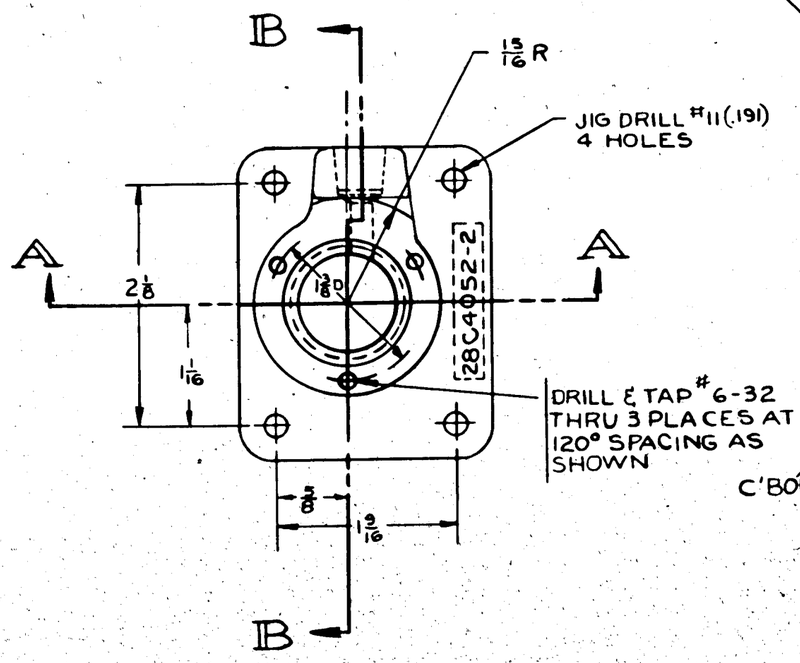

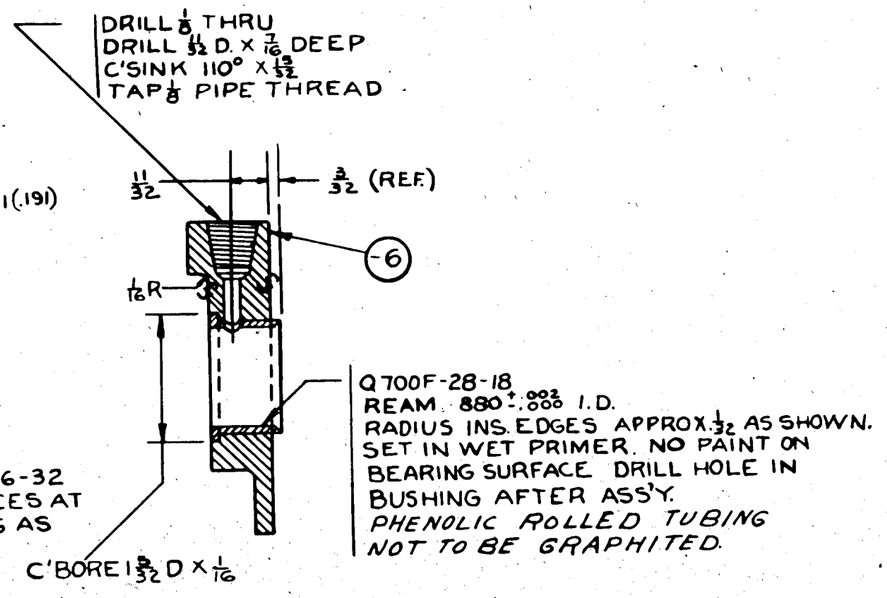
DRILL 1/8 THRU
DRILL 11/32 D. x 7/16 DEEP
C'SINK 110° x 13/32
TAP 1/8 PIPE THREAD
11/32
3/32 (REF.)
-6
1/16 R
Q700F-28-18
REAM .880 +.002 -.000 I.D.
RADIUS INS. EDGES APPROX. 1/32 AS SHOWN.
SET IN WET PRIMER. NO PAINT ON BEARING SURFACE. DRILL HOLE IN BUSHING AFTER ASS'Y.
PHENOLIC ROLLED TUBING
NOT TO BE GRAPHITED.
C'BORE 1 5/32 D x 1/16

SECTION B-B

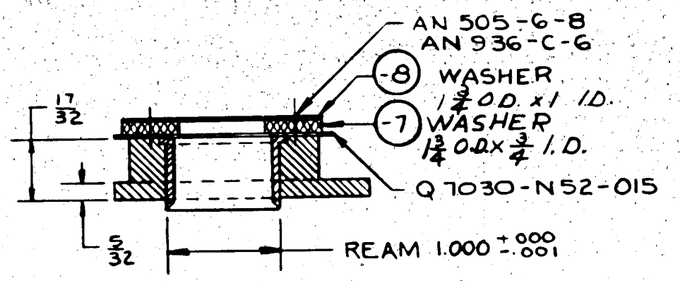

SECTION A-A

#25 ℄ ON

ASSY. DASH NO.	MODEL	NEXT ASSY.	REQ
	PBY-5	28T5101	1
	PBY-5A	28T5101	1
	PBY-5B	28T5101	1
	ALL 28-5's	28T5101	/EA.

REQUIREMENTS PER AIRPLANE

REPLACES 28T5104 3-18-40 CALC WT.

REPLACED BY AGT. WT.

UNLESS OTHERWISE SPECIFIED ±.010 SCALE 12" = 1'-0"

STAMP PART NUMBER WHERE SHOWN

PART NO	STOCK	MATERIAL	SPEC.	LH REQ.	RH REQ.	LH REQ.	RH REQ.	LH REQ.	RH REQ.	LH REQ.	RH REQ.	LH REQ.	RH REQ.
	Q7030-N52-015			1									
	Q700F28-18			1									
	AN936-C-6			2									
	AN505-6-8			2									
-8	.025X17/8X17/8	ST STEEL	47521-A	1									
-7	1/8X17/8X17/8	FELT SAE F-3	AN-F-14	1									
-6	MAKE FROM 28C4052-2 C'S'T'G.			1									

PARTS LIST PER ASSY.

A C | NAVY NONE | HEAT TREAT | NOTED | FINISH

	ROSENBAUM	JWH	GREEN	SC	JPZ	
DRAFT	3-18-40	SF		4/9/40	4/10/40	R
	CHECK	STRUCT	MAT	APPROV	ENG	

OPP. HAND

NAME BEARING-RUDDER LOCK CONTROL-TAIL POST

DWG. D SIZE 28T5104

CONSOLIDATED VULTEE AIRCRAFT CORP. SAN DIEGO DIVISION . . SAN DIEGO, CALIF.

FINISH NOTE:
-6: Z-P-GP
-8: POLISH & PASSIVATE] IN DETAIL

FINISH CODE	
Z	ANODIC TREATMENT
P	P27 PRIMER
GP	GREEN PRIMER
C	CADMIUM PLATE

28T5104 R

LET	ALTERATION	DATE	BY
A	CHANGED CUT OUT TO ACCOMMODATE SHAPE OF SOCKET.		
B	FINISH NOTE "-6 ONLY: PASSIVATE IN DETAIL" WAS "-6 ONLY: POLISH & PASSIVATE..." NO WT. CHG.	6-19-42	

NORTHROP EA 7434

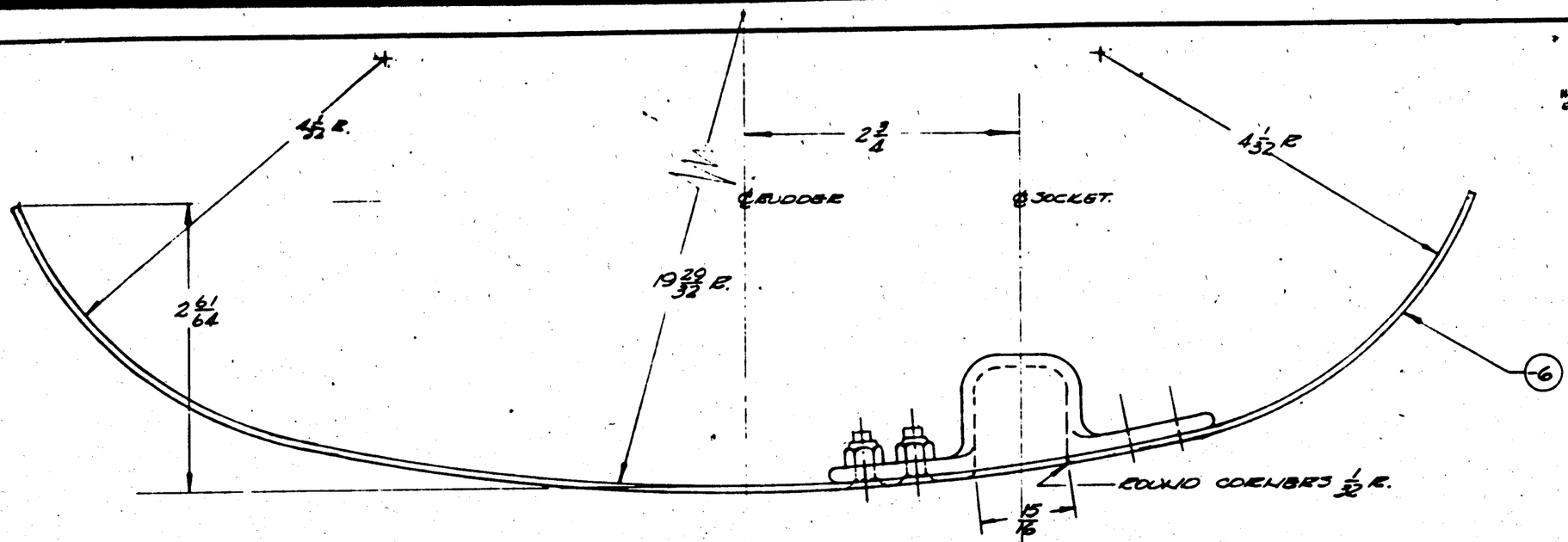

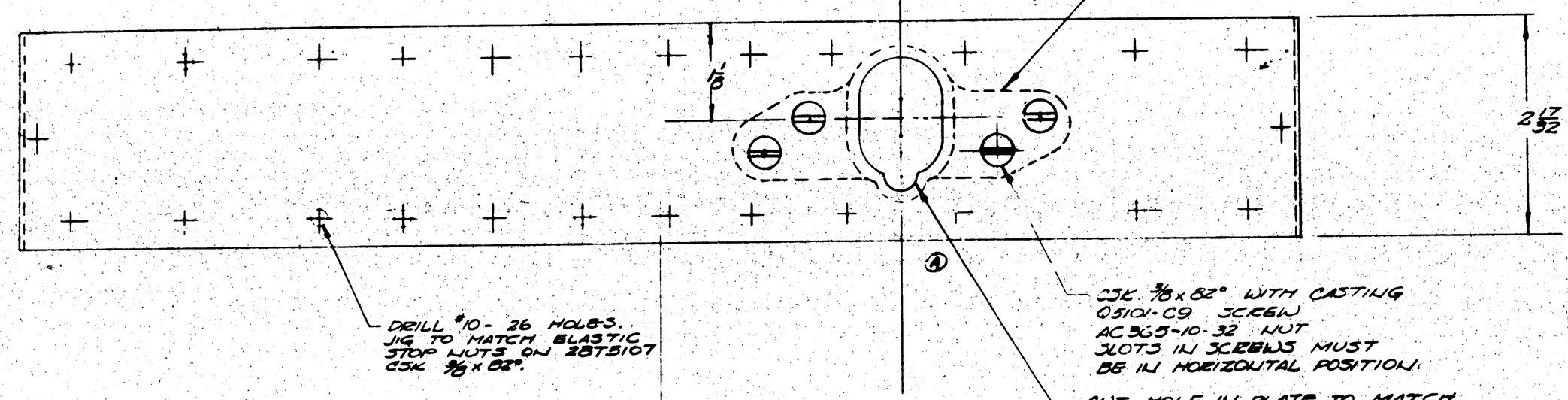
28T5103 SOCKET.
1/8
2 17/32
DRILL #10-26 HOLES. JIG TO MATCH PLASTIC STOP NUTS ON 28T5107 CSK 3/8 x 82°.
CSK. 3/8 x 82° WITH CASTING
Q5101-C9 SCREW
AC365-10-32 NUT
SLOTS IN SCREWS MUST BE IN HORIZONTAL POSITION.
CUT HOLE IN PLATE TO MATCH 28T5103.
A

(B)

FINISH NOTE:-
-6 ONLY:
PASSIVATE IN DETAIL

ASSY DASH NO.	MODEL	NEXT ASSY.	REQ.
	PBY-5B	28T5107	1
	28-5AMC		1
	28-5AMN		1
	28-5MN		1
	28-5ME		1
	28-5MC		1
	28-5MA		1
	PBY-5A		1
	PBY-5	28T5107	1

REQUIREMENTS PER AIRPLANE

REPLACES — CALC. WT.

REPLACED BY — ACT. WT.

UNLESS OTHERWISE SPECIFIED + 1/32 — SCALE 12"=1'-0"

STAMP PART NUMBER WHERE SHOWN

PART No.	STOCK	MATERIAL	SPEC.	LH REQ.	RH REQ.	LH REQ.	RH REQ.	LH REQ.	RH REQ.	LH REQ.	RH REQ.	LH REQ.	RH REQ.
Q5101-C9				4	4								
AC365-1032						1	1						
28T5103								1	1				
-6	.079 x 2 3/4 x 17 1/2	24ST AL. ALLOY	47A21							1	1		

PARTS LIST PER ASSY. — -0 -2 -3 -4 -6

AC							
NAVY NOTED	NOTED						
HEAT TREAT	FINISH	DRAFT	CHECK	STRUCT.	MAT.	APPROV.	ENG.
		3/19/42			4/14		

NAME RUBBING STRIP - RUDDER LOCK - LEADING EDGE

OPP. HAND NONE

CONSOLIDATED AIRCRAFT CORP. SAN DIEGO, CALIF.

DWG. SIZE D — 28T5106

LET	ALTERATION	DATE	BY
A	CHG'D POSITION OF ANGLE OF PART	10-12-38	COMBN

ADDITIONAL E.O. 1087

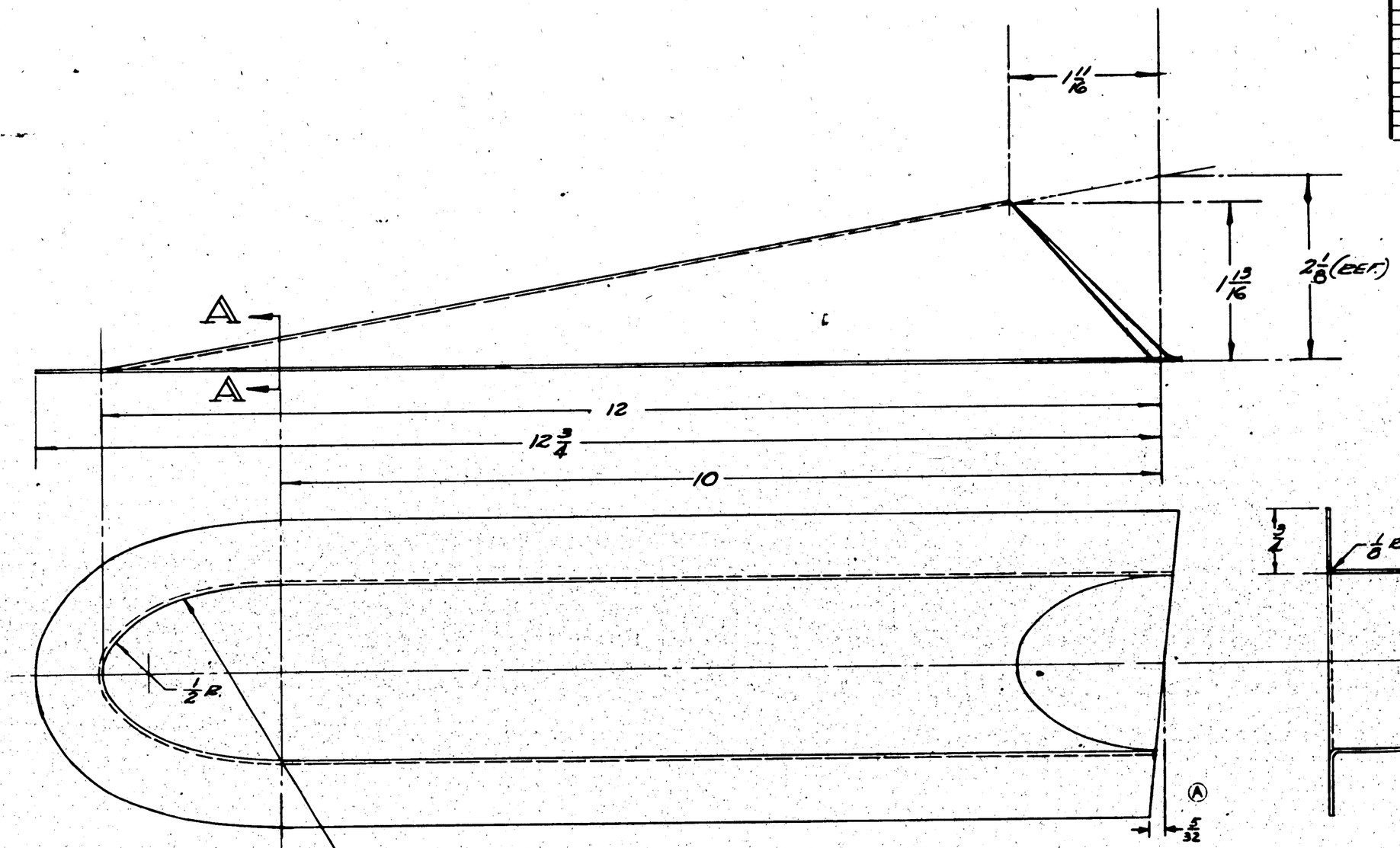

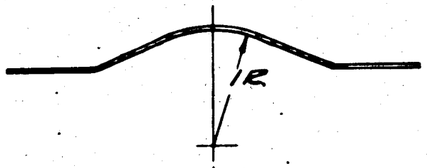

SECTION A-A

FINISH CO.

Z	ANODIC TREATMENT
P	P-27 PRIMER
AP	ALUMINIZED PRIMER
C	CADMIUM PLATE

ASSY. DASH NO.	MODEL	NEXT ASSY.	REQ.
	PBY-5B	28T3005	1
	PBY-5A	28T3005	1
	PBY-5	28T3005	1

REQUIREMENTS PER AIRPLANE

REPLACES

REPLACED BY

CALC. WT.

ACT. WT.

LIMIT ON DIMENSIONS WITHOUT INDIVIDUAL TOLERANCE ± 1/32

SCALE 12" = 1'-0"

STAMP PART NUMBER WHERE SHOWN

PART NO.	STOCK	MATERIAL	SPEC.
	◆ .025 x 12 x 17	245-ALG.	47A8 A

PARTS LIST PER ASSY.

LH REQ.	RH REQ.	LH REQ.	RH REQ.	LH REQ.	RH REQ.	LH REQ.	RH REQ.	LH REQ.	RH REQ.
		-0		-2		-3		-4	-5

A.C.									
NAVY JE-53	Z-P-2AP	Thomas Taylor							
HEAT TREAT	FINISH	DRAFT	CHECK	STRUCT.	MAT.	MFGR.	ENG.		

NAME FAIRING-RUDDER, TAB CONTROL TUBE

CONSOLIDATED AIRCRAFT CORP. SAN DIEGO, CALIF.

OPP. HAND NONE

SIZE D

28T5108

LET	ALTERATION	DATE	BY
A	[illegible]	[illegible]	[illegible]
B	[illegible]	[illegible]	[illegible]
C	[illegible] AN3115-6 AN3 29T1192-6	[illegible]	[illegible]

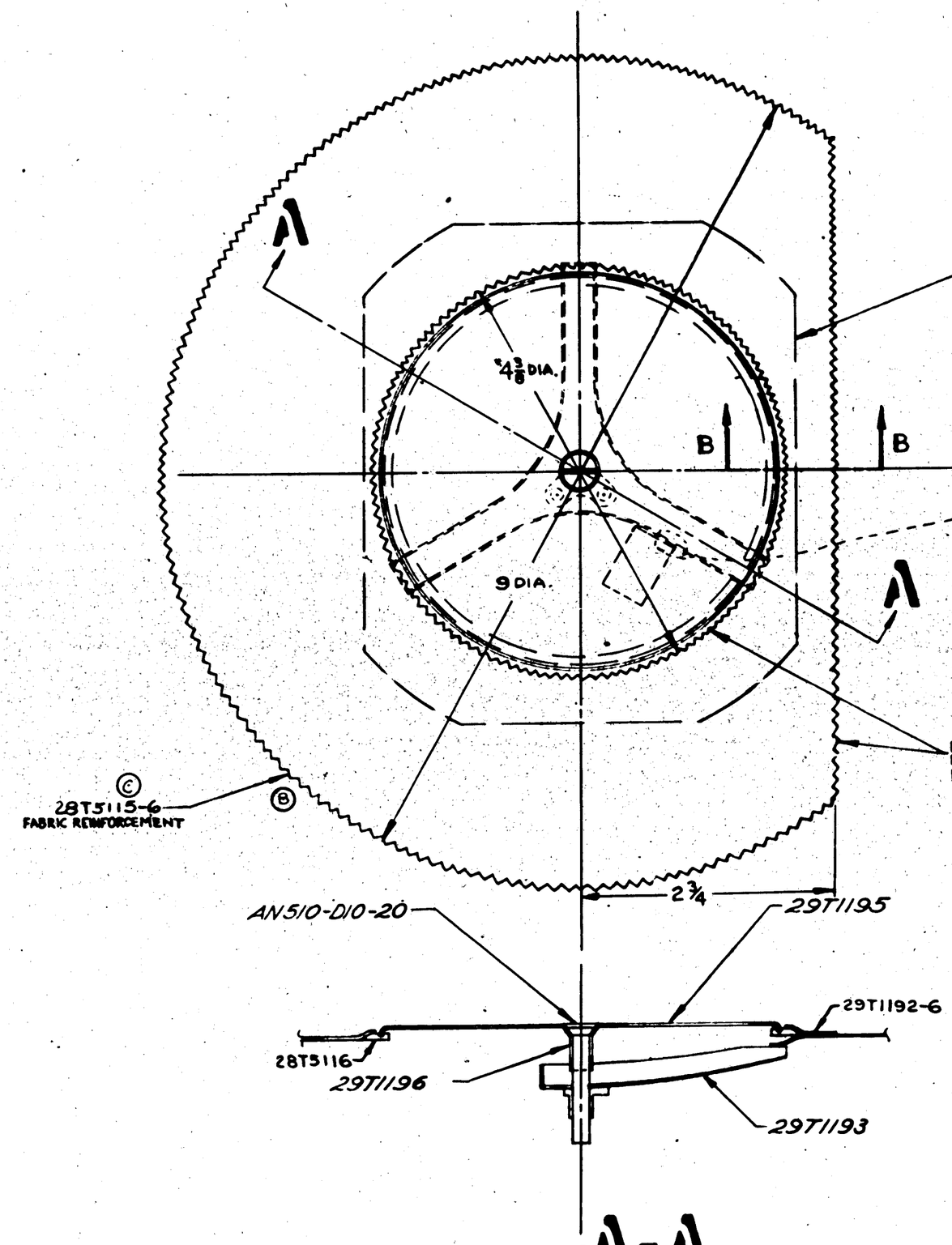

SECTION - A - A

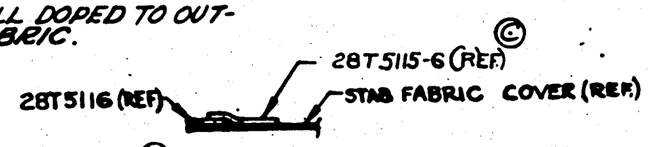

Ⓑ SECTION B-B

NOTE — CUT ℄ FLANGE HOLE IN 28T2051-77 PULL PLATE THE SAME AS ELEVATOR PULL PLATE

ASSY. DIAGM. NO.	MODEL	NEXT ASSY.	QUAN.
	PBY-6A	28T2051	2
	PBY-5B	28T2051	2
	PBY-5	28T2051-[illegible]	1
	PBY-5	28T2051-[illegible]	1

REQUIREMENTS PER AIRPLANE

REPLACES — .13 CALC. WT.

REPLACED BY — ACT. WT.

SCALE 12"=1'0"

STAMP PART NUMBER WHERE SHOWN

PART No.	STOCK	MATERIAL	SPEC.	LH REQ.	RH REQ.	LH REQ.	RH REQ.	LH REQ.	RH REQ.	LH REQ.	RH REQ.
AN510-D10-20				1							
28T5115-6		FABRIC	95 C 13	2							
	1/16 x 10	x 0	BRITISH STAND. CODE	YT-271	1						
29T1196				1							
29T1195				1							
28T5116				1							
29T1193				1							

PARTS LIST PER ASSY. — -0 -2 -3 -4 -5

QC — PROCESS

NAVY — 24-7-40

HEAT TREAT — FINISH — DRAFT — CHECK — STRUCT. — MAT — Jan 6 — [illegible]

NAME ACCESS DOOR - PULL PLATE - STABILIZER TIP

CONSOLIDATED AIRCRAFT CORP. SAN DIEGO, CALIF.

OPP. HAND

SIZE D — DWG. 28T5115

LET	ALTERATION	DATE	BY
A	ADDED "AT FINAL ASSY. TO NOTE. (WT. CHG. NEG.)	8-27-42	SLICH
B	C'SINK 115° x 3/8 DIA. WAS C'SINK 78° x 3/8 DIA. (WT. CHG. NEG.)	8-27-42	SLICH
C	REMOVED "AT FINAL ASS'Y. FROM NOTE. (WT. CHG. NEG.)	9-1-42	STEDR
D	NOTE "1/4 (250) ----- 28T5124" WAS "JIG DRILL 1/4 HOLE TO MATCH 28T5124." NEG. WT. CHG.	11-4-43	MORRIS
E	ADDED 1/2 R DIM. NO WT. CHG.	11-4-43	MORRIS

E.O. A 36924
E.O. A 80533

THIS HOLE MUST MATCH LOCATION OF SAME HOLE IN 28T5126-R

REAM .250 ±.001

3/16 D TOOLING HOLES

JIG DRILL #10 (.193) TO MATCH 28T2036-3 RH & 28T2036-6 LH. C'SINK 115° x 3/8 DIA. 2 PLACES

Ⓒ

13

5 1/8

1 19/32

2 3/8 R.

1 1/2

1 1/2

45°

22 1/2°

22 1/2°

45°

2 R.

11/16

1/2

JIG DRILL & REAM .250 +.0005 -.0015 TO MATCH 28T3010-3, 4 PLACES

Ⓑ Ⓒ

REAM .375 +.0005 -.0015 TO MATCH 28T2036-3 RH & 28T2036-6 LH

15 3/4

Ⓓ 1/4 (.250) (5 HOLES) TO MATCH 28T5124

4 R.

1 3/4 R.

3/4

3/4

1/2 R.

Ⓔ

REAM .375 +.0005 -.0015 TO MATCH 28T5126-R

4 13/16

3 7/16

3

FINISH - ANODIZE
P-27 PRIMER

LET	ASSY. DASH NO.	MODEL	NEXT ASSY.	REQ.
LER	28-5AMN	28T5125	1EA
LER	PBY-5B	28T5125	1EA
LER	PBY-5A	28T5125	1EA
LER	PBY-5	28T5125	1EA

REQUIREMENTS PER AIRPLANE

REPLACES 28T3010-2 — .89 CALC WT.
REPLACED BY — ACT. WT.
LIGHT OR DIMENSIONS UNLESS OTHERWISE SPECIFIED ± .015 — SCALE 12" = 1'-0"
STAMP PART NUMBER WHERE SHOWN

PART NO.	STOCK	MATERIAL	SPEC.	LH REQ.	RH REQ.	LH REQ.	RH REQ.	LH REQ.	RH REQ.	LH REQ.	RH REQ.	LH REQ.	RH REQ.
	#187 x 6½ x 19	ALCLAD	47A8-CONT	-0		-2		-3		-4		-5	

PARTS LIST PER ASSY.

AC
NAVY NONE — HEAT TREAT
Z-P — FINISH

	REED	CHECK	STRUCT	MAT	APPROV	ENG.
DRAFT	5-12-42					

NAME HORN PLATE ELEVATOR INSTALL'N

CONSOLIDATED AIRCRAFT CORP. SAN DIEGO, CALIF.

OPP. HAND 28T5126 R

DWG. D SIZE — 28T5126

LTR	ALTERATION	DATE	BY
	A DRAWING REVISED & REISSUED FOR RECORD CHANGE ONLY	4-27-43	REED
	B ADDED STENCIL ON DOOR NO WT. CHG	8-30-43	KRIEGER

AC AD6348

(REF.) 28T5002-40

-6

28T5002-8L (REF.)

28T5057 (REF.)

AN 426-D2-RIV. APPROX. 3/4 CENTERS PICK UP EXISTING RIVETS AND ADD ONE RIVET BETWEEN

STENCIL LETTERS 3/8" HIGH (B)

28T5036 (REF.)

OUTLINE OF CUTOUT IN SKIN 28T5002-8L

Q5105-D10-8-SCR.
AC366-DF1032-NUT
AN426-D3-RIVET
LOCATE AS SHOWN
MACH. C'SK FOR SCR.
100° X .375 DIA.

ACCESS-
TUBE CONNECTION-
ANTI-ICING

(REF.) 28T5062

AN 455-D2-RIV.

-8 -6 -9

-7 SECTION A-A

28T5002-8L (REF.)

NOTE:- THIS INSTALLATION LOCATED ON L.H. SIDE ONLY OF UPPER FIN.

APPROVED FOR TOOLING BY
E. E. Dalton
1-27-43

ASSY. DASH NO.	MODEL	NEXT ASSY.	REQ.
	PBY-5A	28T5002	1
	PBY-5	28T5002	1

REQUIREMENTS PER AIRPLANE

REPLACES 28T5130 OF 9-5-42 — CALC. WT.

REPLACED BY — ACT. WT.

ALL DIMENSIONS UNLESS OTHERWISE SPECIFIED ±1/32 ±.0

SCALE 12"=1'-0"

STAMP PART NUMBER WHERE SHOWN

PART NO.	STOCK	MATERIAL	SPEC.	LH REQ.	RH REQ.	LH REQ.	RH REQ.	LH REQ.	RH REQ.	LH REQ.	RH REQ.	LH REQ.	RH REQ.
	Q5105-D10-8			10									
	AN455-D4			20									
	AN426-D3			10									
	AC366-DF1032			1									
-9	1/64 X 8 1/2 X 9 3/4	NEOPRENE	N-11	1									
-8	1/32 X 6 1/4 X 7 3/4	NEOPRENE	N-11	1									
-7	.040 X 6 1/4 X 7 3/4	ALC. AL. ALLOY	47A8-T	1									
-6	.040 X 8 1/2 X 9 3/4	ALC. AL. ALLOY	47A8-T	1									

PARTS LIST PER ASSY.

AC		B.O.I.					
NAVY		12-6-42		"			
HEAT TREAT	FINISH	DRAFT	CHECK	STRUCT	CUSTOMER MAT	APPROV	ENG.

NAME INSPECTION DOOR-
INSTALL.-UPPER FIN

OPP. HAND

CONSOLIDATED AIRCRAFT CORP. SAN DIEGO, CALIF.

DWG. SIZE D

28T5130

PER NORTHROP AC. CODE

E.O. 22039
23173
E.O. 23357
E.O. 23357A
E.O. A30754
ACA 380
ECM 4076

LET	ALTERATION	DATE	APP'D
	TOOLS REQ. ADDED AT L.E.		
B	FABRIC IDENTIFICATION ADDED		
C	REMOVE REQ'MTS OF THIS DWG FROM ASSEM. REQ'MTS DWG A. A.P. DID REQ'D FOR		
D	ADDED -6 FABRIC REINFORCEMENT TO DRWG. & B/M.		
E	CHANGED -6 FABRIC REINFORCEMENT TO 29T1192-6	5-2-41	
P	ASSIGNED NOS. -7 TO INSULATION, -8 TO CORD, & -9 TO TAPE		
G	ADDED B-24-D & B-24-E REQTS ADDED CALC WT. SPEC CHANGED AN-CCC-C-999 WAS 47C-13	1-9-42	
H	CHANGED REQT PER ASST OF -6 TO 1 - WAS 6	2-9-42	
J	DETAIL 4 CHANGED TO READ CORRECTLY ON FACE of DRWG	2-[illegible]-42	
K	B/M REARRANGED TO SUIT	5-5-42	
L	ADDITION OF NEW DASH NOS REVISED REQ. FOR RANE BLOCK NO WT. CHG.		
M	IN DETAIL FACE OF DRG. REPL. ACED 29T1194 WITH 29T1194-6 NO WT. CHG.	3/16/43	
N	-7, OD. 7" WAS 5½, WT. CHG. NEG	6-2-43	
P	IN NOTE "10 IN. OF #9 --- KNOTTED" #9 LINEN BARBOUR CORD DIP IN ACETATE OR NITRATE DOPE, WAS 1/16 BRAIDED LINEN CORD. IN B/M FOR -8, #9 LINEN BARBOUR CORD WAS 1/16 BRAIDED LINEN CORD. NO WT. CHG.	7-15-43	MAIN

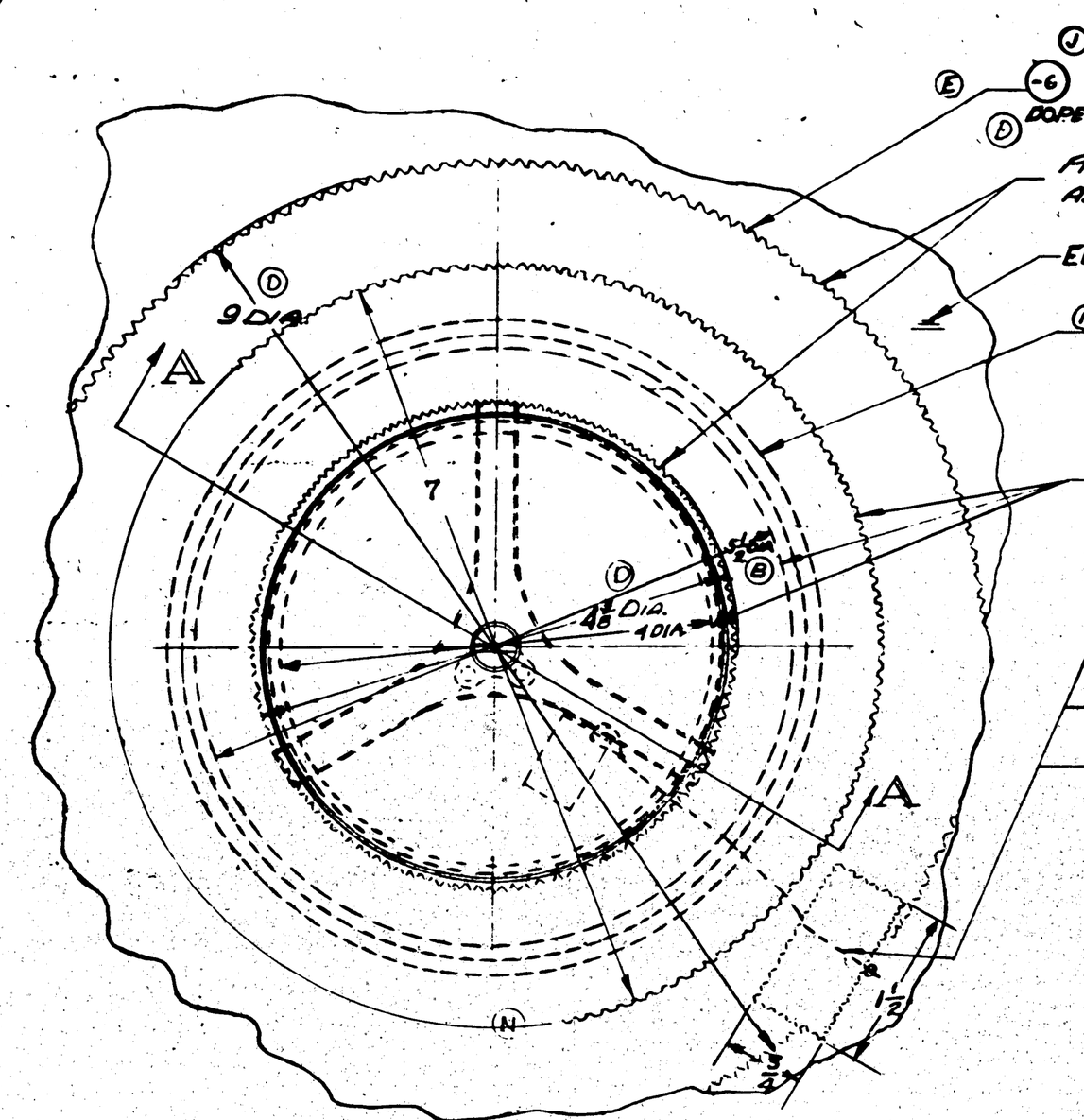
(J) (E) -6
FABRIC REINFORCEMENT
(D) DOPE IN PLACE
PINK INSIDE & OUTSIDE, EDGES AS SHOWN OF -6 (J)
ELEVATOR FABRIC COVER (REF.)
(M) 29T1194-6 WILL DOPED TO OUTSIDE OF FABRIC.
(F) -7
(P) 10 IN. OF #9 LINEN BARBOUR CORD. DIP IN ACETATE OR NITRATE DOPE. LED THRU HOLE IN 29T1135-7, KNOTTED, AND DOPED UNDER PINKING TAPE AND KNOTTED
(F) -8 CORD
(F) -9 TAPE - PINK EDGES AS SHOWN
9 DIA.
A
7
(D) 4⅞ DIA.
4 DIA
(B) 2 DIA
1 DIA
1A
1½
¾
(N)

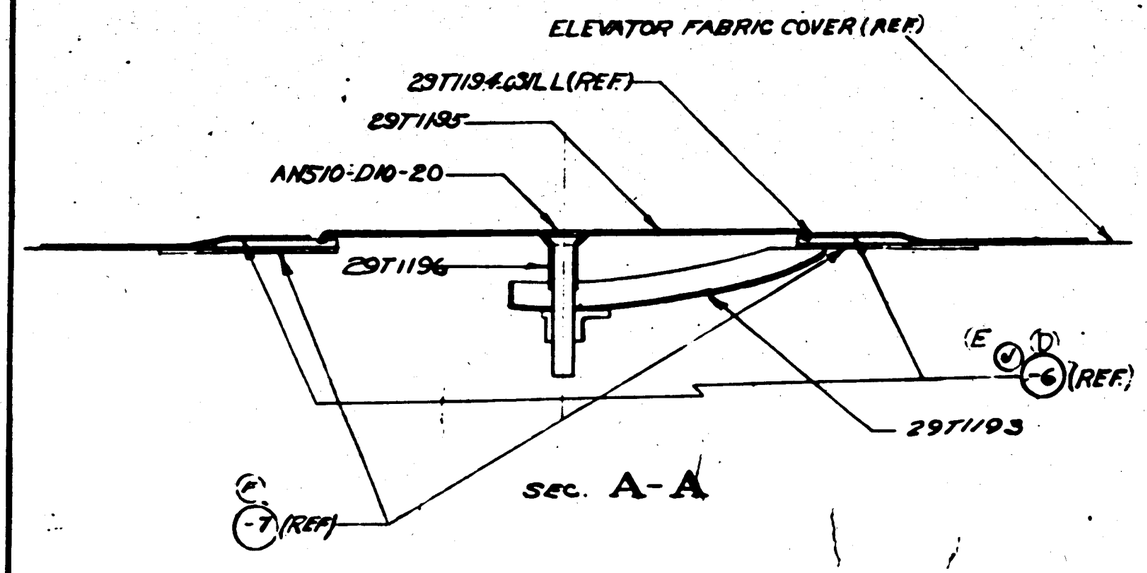

SEC. A-A

	PART NO.	STOCK	MATERIAL	SPEC.	LH REQ.	RH REQ.	LH REQ.	RH REQ.	LH REQ.	RH REQ.
(F)	-9	⅛ x 1¾	LINEN TAPE PINKED	AN-CCC-C-999						
(F) (E)	-8	#9 x 12	LINEN BARBOUR CORD	COMM						
(F)	-7	7 x 7	COTTON FABRIC 8 PLY	AN-CCC-C-192						
	-6	9¾ x 9¾	COTTON FABRIC	AN-CCC-C-192						
	-5	4⅞ DIA	COTTON FABRIC	AN-CCC-C-192						
	-4	4 DIA	COTTON FABRIC	AN-CCC-C-192						
	-3	2 DIA	COTTON FABRIC	AN-CCC-C-192						
	-2	1 DIA	COTTON FABRIC	AN-CCC-C-192						
	-1	¾ DIA	COTTON FABRIC	AN-CCC-C-192						
(N)					LH REQ. -0	RH REQ. -2	LH REQ. -3	RH REQ. -4	LH REQ. -5	RH REQ. -6

PARTS LIST PER ASSY.

ASSY. DASH NO.	MODEL	NEXT ASSY.	QTY.
		AN510 D10-20	6
(K)			
	P4Y-2	29T1006	4
(D)	P4Y-2	29T1008	4
	P4Y-2	29W1596	21
	P4Y-2	29W1595	20

REQUIREMENTS PER AIRPLANE

REPLACES — (B) .146 CALC. WT.

REPLACED BY — ASSY. WT.

SCALE 12" = 1'-0"

± 1/32

STAMP PART NUMBER WHERE SHOWN

29T1193 (M)
29T1194-6 (M)
29T1195
29T1196
(K)

AC
NAVY NONE
HEAT TREAT
FINISH
DRAFT

NAME INSTALLATION - INSPECTION DOOR

CONSOLIDATED AIRCRAFT CORP. San Diego, Calif.

OPP. HAND

SIZE D

29T1192

RE-2611-[illegible]

LET	ALTERATION	DATE	BY
A	ON DWG. FACE 1.125±.002 TO 1⅛ ∅ ADDED 1.125±.002	7-10-41	[illegible]
B	ADDED DIMS. 1 7/16 & 4 7/16 FOR FINISHED CASTING. ADDED X		
	WT. CHG. NEG.	7-2-43	[illegible]

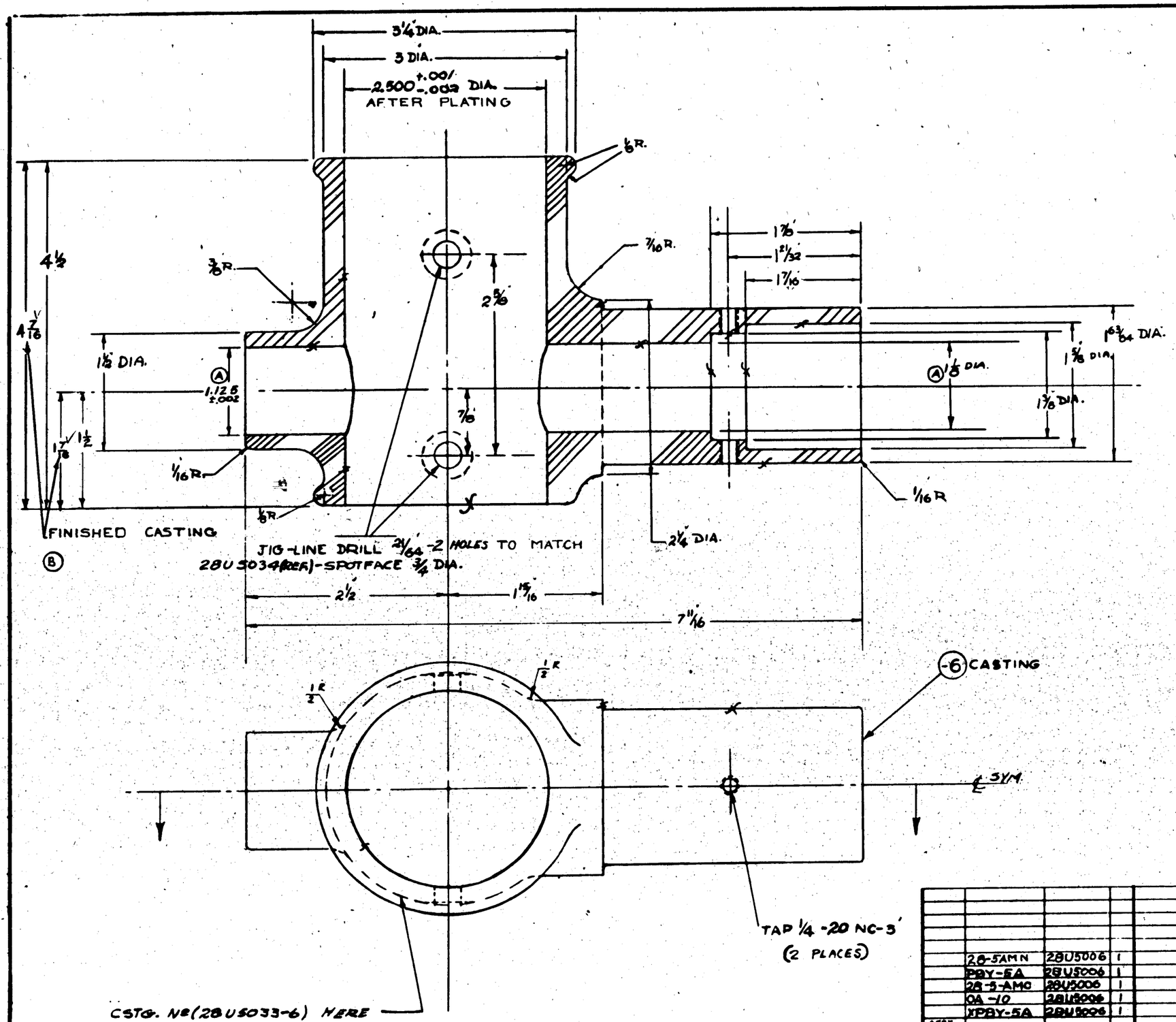

NOTE
UNSPECIFIED CORNER & FILLET RADII ARE 1/32.
BREAK ALL SHARP EDGES

MATL. - SPEC.
TO CONFORM TO 4951 NAVY SPEC, EXCEPT, MATERIAL TO BE C.M. STEEL, MIN. ULT. TENSILE STRENGTH OF 100,000 P.S.I.

TOLERANCES:-
CASTING ± 1/32
MACHINE ± .010

FINISH C	
Z	ANODIC TREAT
P	P-27 PRIMER
AP	ALUMINIZED PRIMER
C	CADMIUM PLATE

ASSY. DASH No.	MODEL	NEXT ASSY	QUAN
	28-5AMN	28U5006	1
	PBY-5A	28U5006	1
	28-5-AMC	28U5006	1
	OA-10	28U5006	1
	XPBY-5A	28U5006	1

REQUIREMENTS PER AIRPLANE

REPLACES — CALC WT. 4.35

REPLACED BY — ACT. WT.

UNLESS OTHERWISE SPECIFIED ± NOTED — SCALE 12"-1'-0"

STAMP PART NUMBER WHERE SHOWN

PART No.	STOCK	MATERIAL	SPEC.	1 LH REQ. -0	RH REQ. -2	LH REQ. -3	RH REQ. -4	LH REQ. -5	RH REQ.
4	CASTING	NOTED	NOTED						

PARTS LIST PER ASSY.

AC		10-11-40	T.G.P.		Moved J.F.E.		J.M.L.
NAVY NOTED	C—P	DRAWING CHECK	PLOTTED	GREEN			
HEAT TREAT	FINISH	DRAFT	CHECK	STRUCT.	MAT	APPROV.	DATE

NAME FITTING-N.L.G.-TOWBAR

CONSOLIDATED AIRCRAFT CORP. SAN DIEGO, CALIF.

OPP. HAND

DWG. SIZE D — 28U5033

28U5033

CB-SAMC, PBY-5A & CAMD
E.O. A31552

LET	ALTERATION	DATE	BY
A	STOCK LENGTH 6, 32" WAS 0 7/8	9-14-42	BEACH
B	ADDED NOTE: "CAUTION---- KEEL"		
C	CHANGED NOTE "JIG LINE ----: REF(-7) KEEL" WAS "JIG LINE DRILL 21/64 DIA. 2 HOLES TO MATCH 28L5007 (REF)"	8-16-43	BEACH

$9 \pm \frac{1}{8}$

$32 \pm \frac{1}{8}$

$2.375^{+.003}_{-.000}$ DIA.

$\frac{3}{4}$ — 1

LINE DRILL 5/16 DIA.

A

A

JIG LINE DRILL $\frac{21}{64}$ DIA. -2 HOLES TO MATCH 28U5007 (REF.)

©

$11\frac{1}{2} \pm \frac{1}{8}$

-6

18 RAD.

$19\frac{1}{2} \pm \frac{1}{8}$

LINE DRILL 1 1/8 DIA

NOTE: THESE 3 HOLES TO MATE 28U5033 (REF)

2 — 1 1/2

JIG LINE DRILL #21/64 DIA.-2 HOLES

CHAMFER 45° x 1/32

$\frac{2}{32}$" DIA OF CORK PLUG

$\frac{7}{8}$ — $\frac{5}{8}$

$2\frac{5}{8}$

$5 \pm \frac{1}{8}$ SWAGING LENGTH

$2.496^{+.001}_{-.003}$ DIA.

OVERALL LENGTH BEFORE BENDING - 90° (7'-6")

(-7) CORK PLUG - SHELLAC THOROUGHLY AND DRIVE IN PLACE

(B)

NOTE: STENCIL IN RED LETTERS 1/2" HIGH (EXCEPT "CAUTION" IN 1" LETTERS): "CAUTION - DO NOT USE THIS BAR UNLESS SNUBBING CABLE IS ATTACHED TO KEEL." (FOR PBY-5A & 28-5 AMC ONLY)

NOTE: 2P FINISH ON INSIDE OF -6
BREAK ALL SHARP EDGES.

FINISH CODE	
Z	ANODIC TREATMENT
P	P-27 PRIMER
AP	ALUMINIZED PRIMER
C	CADMIUM PLATE

SPOTFACE WITH $\frac{3}{4}$ DIA. TOOL TO THIS DIM. - 6 PLACES.

1/32 MAX.

SEC. A-A
SCALE 12"=1'-0"

TO MCR 253 (1)

PBY-5A	28U5006	1	
28-5-AMC	28U5006	1	
28-5AMN	28U5006	1	

ASSY. DASH NO.	MODEL	NEXT ASSY.	REQ

REQUIREMENTS PER AIRPLANE

REPLACES — CALC WT. 21.75

REPLACED BY — ACT. WT.

LIGHT CAN BE SHOWING THRU ALL DRILLED OPENINGS ± 1/32

SCALE 6"=1'-0" & NOTED

STAMP PART NUMBER WHERE SHOWN

PART NO.	STOCK	MATERIAL	SPEC.	LH REQ.	RH REQ.	LH REQ.	RH REQ.	LH REQ.	RH REQ.	LH REQ.	RH REQ.	LH REQ.	RH REQ.
-7	2½ x 2 LONG	CORK	COMM.	1									
28U5034-6	2½ O.D. X 1.09 X .02	C.M. STL. TUBE	44T18	1									

PARTS LIST PER ASSY.

-0	-2	-3	-4	-5

AC
NAVY 180,000 #/□"
HEAT TREAT

C — P & NOTED
FINISH

DRAFT: T.G.P. 10-28-42
CHECK: EL PRED
STRUCT.: GREEN
MAT
APPROV.
ENG.

OPP. HAND

NAME TOWBAR - NLG

CONSOLIDATED AIRCRAFT CORP. SAN DIEGO, CALIF.

DWG. SIZE D — 28U 5034

LET	ALTERATION	DATE	BY

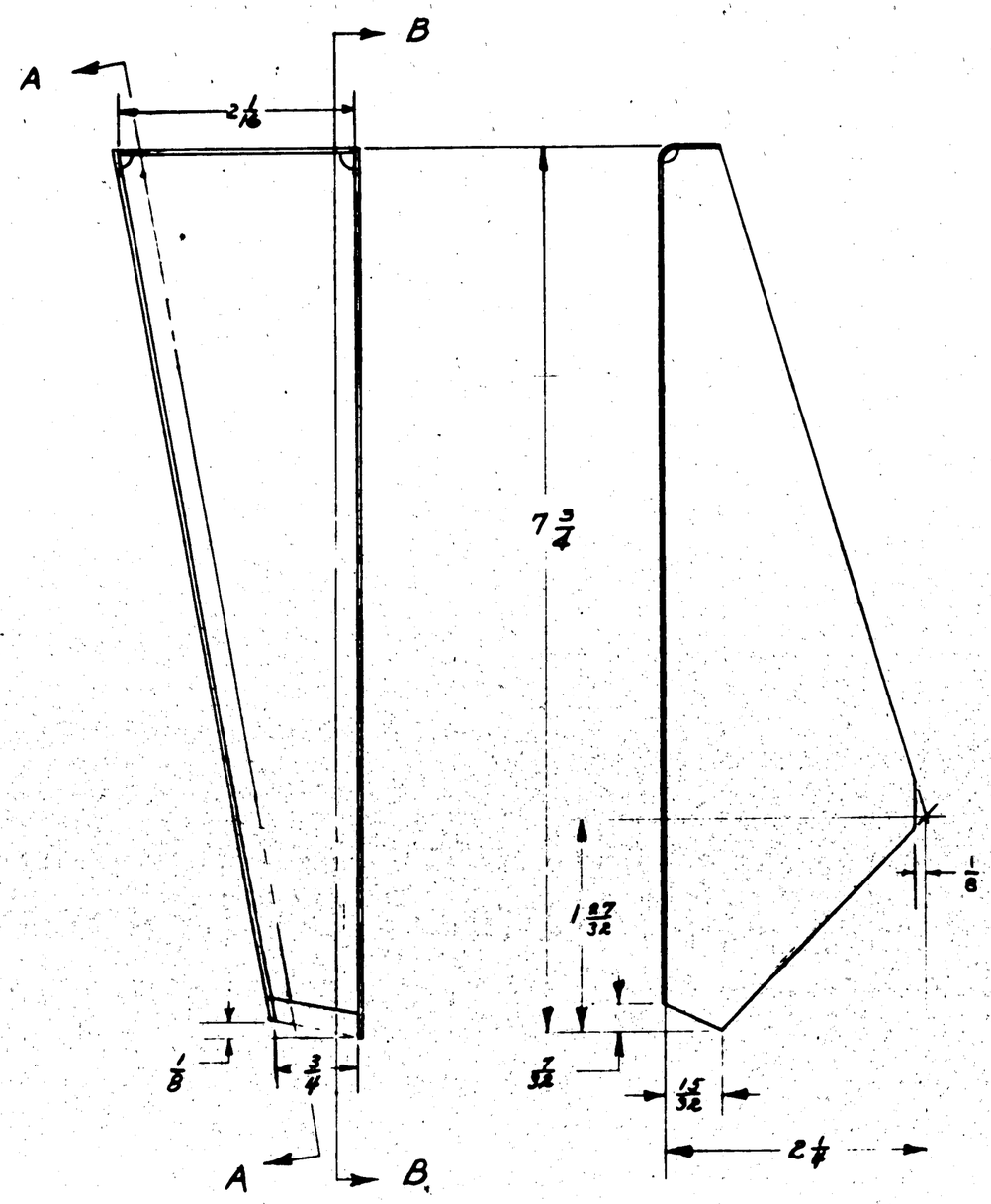

PLAN VIEW

SECTION B-B

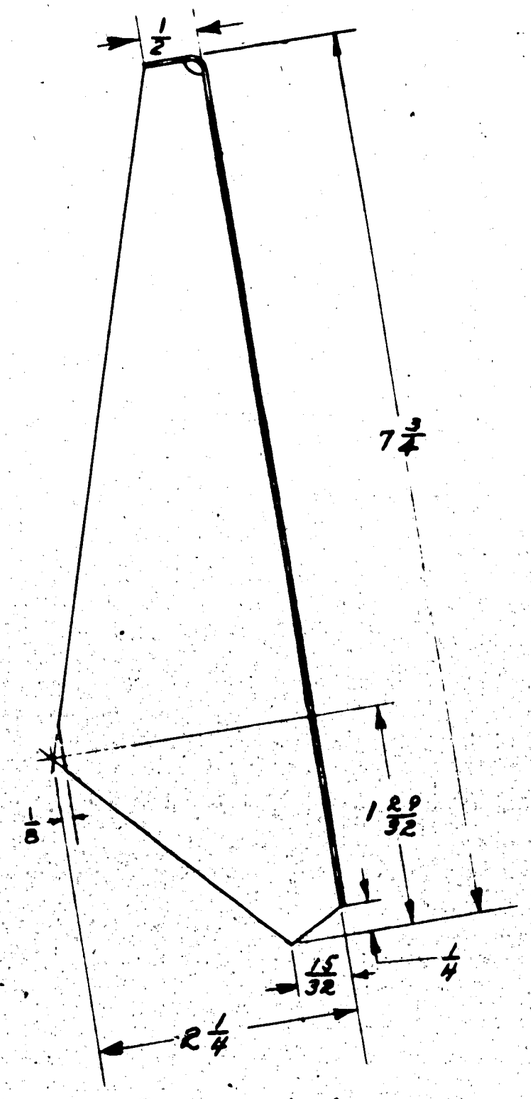

SECTION A-A

ALL BEND & RELIEF RADII 1/8.

S.O. NR 936-53
CONTRACT 70496

ASSY. DASH NO.	MODEL	NEXT ASSY.	REQ
-R	PBY-5A	28U5068	1
-L	PBY-5A	28U5068	1
-R	PBY5	28U5068	1
-L	PBY5	28U5068	1

REQUIREMENTS PER AIRPLANE

REPLACES — CALC WT. 417

REPLACED BY — ACT WT

LIGHT OR DISCOLORED WELDS OTHERWISE SPECIFIED

SCALE 12" = 1'-0"

STAMP PART NUMBER WHERE SHOWN

PART No	STOCK	MATERIAL	SPEC.	LH REQ. -0	RH REQ. -2	LH REQ. -3	RH REQ. -4	LH REQ. -5	RH REQ.
	.044 x 5 7/8 x 8 3/8	C.M. STEEL	47514						

PARTS LIST PER ASSY.

AC — NAVY — HEAT TREAT: NONE — FINISH

DRAFT	CHECK	STRUCT.	MAT	APPROV.	ENG.
SHIPLEY 1-9-43		FRF			R

NAME BRACKET-ARM'T-30 CAL. B.A.M. GUN-REAR ARM. PLATE-TUNNEL GUN

OPP. HAND 28U5041-R

CONSOLIDATED AIRCRAFT CORP. SAN DIEGO, CALIF.

DWG. SIZE D

28U5041

Note: USEFUL LOAD, Normal ... in weight empty of A...

LET	ALTERATION	DATE	BY
A	S.O. 949-25-1 REQ ADDED & NOTE	10-2-43	Billing
B	IN NOTE No 1 CHANGED ARMOR SPEC FROM AS. 585 TO BU ORD SPEC. #2775, CHANGED FINISH FROM ZSP-2AP TO P-GP. NO WT CHG.	5-3-43	LINN

MCR179A

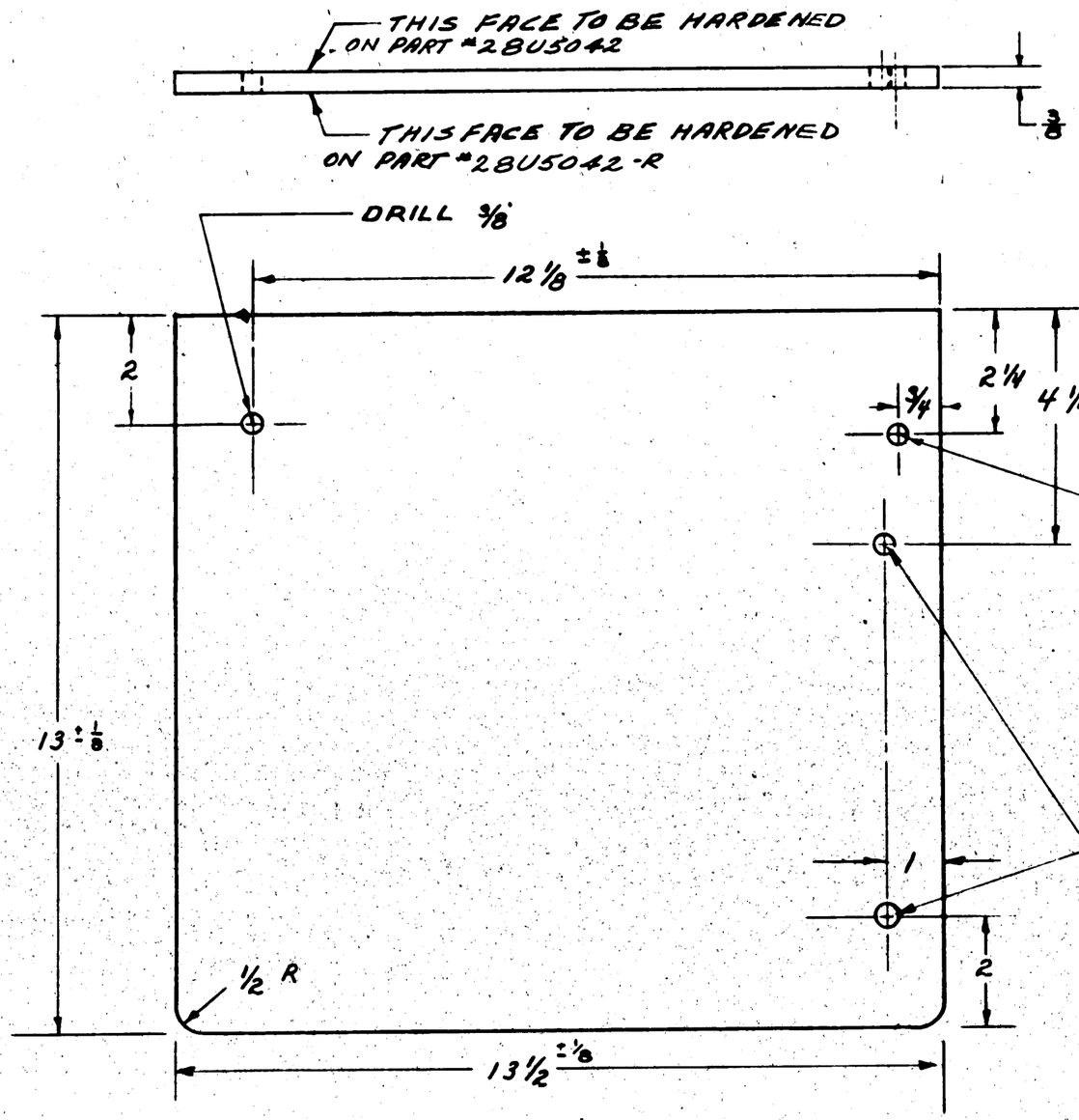

FINISH CODE	
Z	ANODIC TREATMENT
P	P-27 PRIMER
GP	GREEN PRIMER
C	CADMIUM PLATE

CONT. 88476
S.O. 953-9

NOTE:

Ⓐ
S.O. 949-25-1
CONT. 77713
1. PART TO BE C.A.C PROCURED & INSTALLED.
Ⓐ SPEC: BU ORD SPEC. #2775 (FACE HARDENED)
FINISH: P-GP

S.O. 936-53
CONT. 70496
2) PART TO BE PROCURED BY NAVY.
3.) TEMPLATE TO BE FURNISHED BY CONSOLIDATED AIRCRAFT CORP. FOR CHECK. INSTALLATION.

4) HARDENED FACE TO BE STENCILED "THIS FACE TO BE INSTALLED AWAY FROM GUNNER."

S.O. 949-25-1
CONT. 77713
S.O. 953-9
CONT. 88476
SERIAL #02948 TO 02977 INC.

S.O. 936-53
CONT. 70496
MCR 179A

ASSY. DASH No.	MODEL	NEXT ASSY.	REQ
R	OA-10	28U6043	1
L	OA-10	28U5043	1
R	PBY-5A	28U6043	1
L	PBY-5A	28U5043	1
R	PBY-5	28U5043	1
L	PBY-5	28U5043	1

REQUIREMENTS PER AIRPLANE

REPLACES — CALC WT. 18.3

REPLACED BY — ACT WT.

LIMIT OF DIMENSIONS UNLESS OTHERWISE SPECIFIED: ± 1/32

SCALE 6" = 1'0"

STAMP PART NUMBER WHERE SHOWN

PURCHASE TO DWG

PART No.	STOCK	MATERIAL	SPEC.	LH REQ. -0	RH REQ. -0	LH REQ. -2	RH REQ. -2	LH REQ. -3	RH REQ. -3	LH REQ. -4	RH REQ. -4	LH REQ. -5	RH REQ. -5
28U5042	3/8	ARMOR PLATE	NOTED										

PARTS LIST PER ASSY.

		R.O. SHOP	Billing				
AC							
NAVY NOTED	NOTED	12-11-43	12-29-43			1-25-44	
HEAT TREAT	FINISH	DRAFT	CHECK	STRUCT.	MAT	APPROV	ENG.

L.H. PART AS SHOWN-28U5042
R.H. PART OPPOSITE-28U5042-R.

NAME ARMOR PLATE - ARM'T. - BOW GUN TURRET

CONSOLIDATED AIRCRAFT CORP. SAN DIEGO, CALIF.

ORD. HAND 28U5042-R

SIZE D — 28U5042

Excepted 10-5-44

R

28U5042

LET	ALTERATION	DATE	BY
A	DIM. CHANGED: 8 5/16 TO 8 3/16; 1 1/2 TO 1 5/16	2-3-41	CHUNG
	3 TO 2 3/16; 1 1/4 TO 1 1/8; 4 1/8 TO 4 3/16; 7 1/2 TO 7 3/16		
B	S.O. 949-25 REQ. & NOTE ADDED	10-2-41	BILLING
C	CUTOUT ENLARGED: DIM. 2 1/8 WAS 1 3/4	12-26-41	BILLING
	1 11/16 WAS 1 1/16, WEIGHT WAS 6.41		
D	ADDED PB1-5A REQ. S.O. 999-50 & 953-9A-1		PERKINS
	CONT. 77713 ALL & S.O. 953-9A-1		
	CONT. # 88476 #1 TO #52 INCL.		

DRILL 3/8 DIA. 6 HOLES

$10 \pm \frac{1}{8}$

$\frac{3}{8}$ R.

$3\frac{1}{8} \pm \frac{1}{16}$

1

$2\frac{9}{16}$ (REF)

$\frac{3}{8}$ R.

$7\frac{3}{16} \pm \frac{1}{8}$

$4\frac{3}{16} \pm \frac{1}{16}$

$5\frac{29}{32} \pm \frac{1}{16}$

$8\frac{3}{16} \pm \frac{1}{8}$

$3\frac{3}{8} \pm \frac{1}{16}$

1

$1\frac{5}{16}$

Ⓐ $1\frac{1}{16}$

Ⓒ $2\frac{1}{8} \pm \frac{1}{16}$

$2\frac{13}{16} \pm \frac{1}{16}$

$\frac{1}{2}$ R

$8\frac{1}{4} \pm \frac{1}{16}$

$6 \pm \frac{1}{16}$

$12 \pm \frac{1}{8}$

℄ SYM. ABOUT

S.O. 999-50 CONT. 77713 ALL
S.O. 953-9A-1 CONT. 88476 #1 TO #52 INCL.

S.O. 953-9
SERIAL #02948 TO 02977 INCL.

S.O. #936-53
CONTRACT 70496

S.O. 949-25-1
CONT. 77713

NOTE:

Ⓑ S.O. 949-25-1 CONT. 77713, S.O. 953-9 CONT. 88476:
1) PART TO BE C.A.C. PROCURED & INSTALLED. SPEC. O.S. 595 (FACE HARDENED) FINISH ZCP-2AP

S.O. 936-53 CONT. 70496:
2) PART TO BE PROCURED BY THE NAVY.
3) TEMPLATE TO BE FURNISHED BY CONSOLIDATED AIRCRAFT CORP. FOR CHECK INSTALLATION.
4) HARDENED FACE TO BE STENCILED "THIS FACE TO BE INSTALLED AWAY FROM GUNNER.

—THIS FACE TO BE HARDENED

Z	NOOK TREATED
P	P-27 PRIMER
AP	ALUMINIZED PRIMER
C	CADMIUM PLATE

PURCHASE TO D.N.J.

ASSY. DASH NO.	MODEL	NEXT ASSY	REQ
	PBY-5A	28A SIZE	2
	OA-10	28U5056-2	1
	OA-10	28U5056-0	1
	PBY-5A	28U5056-0	1
	PBY-5A	28U5056-2	1
	PBY-5	28U5056-2	1
	PBY-5	28U5056-0	1

REQUIREMENTS PER AIRPLANE

REPLACES — CALC WT. 62

REPLACED BY — ACT WT

UNLESS OTHERWISE SPECIFIED: SCALE 12" = 1'-0"

STAMP PART NUMBER WHERE SHOWN

PART NO	STOCK	MATERIAL	SPEC.	LH REQ.	RH REQ.	LH REQ.	RH REQ.	LH REQ.	RH REQ.	LH REQ.	RH REQ.	LH REQ.	RH REQ.
	1/8X	ARMOR PLATE	NOTED										
PARTS LIST PER ASSY.				-0		-2		-3		-4		-5	

A.C.		E. LEE COOK	BILLING			
NAVY NOTED	NOTED	12-29-40	12-29-40			
HEAT TREAT	FINISH	DRAFT	CHECK	STRUCT	MAT	APPROV	ENG

NAME ARMOR PLATE - ARM'T. - 30 CAL. B.A.M. GUN - FORWARD

OPP. HAND —

CONSOLIDATED AIRCRAFT CORP. SAN DIEGO, CALIF.

DWG. SIZE D — 28U5044

R

LET	ALTERATION	DATE	BY
A	S.O.949-25-1 REQ. & NOTE ADDED	10-24-41	BILLING
B	CUTOUT ENLARGED TO 1½ R (WAS 1⅜ R); DIM. 4¼ WAS 3⅞ WEIGHT WAS 6.57	12-24-41	BILLING
C	ADDED -2 ASS'Y TO S/M & FACE ON DWG. ADDED REQ. & NEXT ASS'Y NO.	1-6-42	LINN
D	CANCELLED -0 ASS'Y FOR CONT# 77713 S.O. 949-25-1 & CONT.# 88476 S.O. 953-9	4-6-42	LINN
E	REVISED PDY-5 REQ. & ADDED "1 TO *52 INCL." TO PDY-5A CONT. BRKT.	6-18-42	[illegible]

THIS FACE TO BE HARDENED

$7\frac{5}{16}$ R. $\pm\frac{1}{16}$

$\frac{3}{4}$ — 7

$5\frac{3}{4}$

(C) DRILL $\frac{3}{8}$ DIA. (4 HOLES REQ) -2 ASSY ONLY.

(B) $1\frac{1}{2}$ R

$2\frac{3}{4}\pm\frac{1}{16}$

$1\frac{3}{8}$

DRILL $\frac{3}{8}$ D. 1 HOLE

$4\frac{1}{4}\pm\frac{1}{16}$

1 — $6\frac{1}{2}$

$2\frac{1}{8}\pm\frac{1}{16}$

1

$2\frac{15}{16}\pm\frac{1}{16}$ $\frac{3}{4}$ $\frac{1}{2}$ R.

$\frac{1}{2}$ R

$3\frac{1}{8}\pm\frac{1}{16}$

$\frac{3}{4}$

$3\frac{5}{8}\pm\frac{1}{16}$

$4\frac{1}{4}$

$8\frac{1}{2}\pm\frac{1}{16}$

NOTE:

(D) S.O. Nº 355-6 CONT. 91876; S.O. Nº 949-50 CONT. 77713; S.O. Nº 953-21 CONT. 88476; S.O. 936-53 CONT. 70496

1. PART TO BE C.A.C. PROCURED & INSTALLED. SPEC. O.S. 595 (FACE HARDENED) FINISH ZCP-2AP

2. PART TO BE PROCURED BY THE NAVY

3. TEMPLATE TO BE FURNISHED BY CONSOLIDATED-AIRCRAFT CORP. FOR CHECK INSTALLATION

4. HARDEND FACE TO BE STENCILED "THIS FACE TO BE INSTALLED AWAY FROM GUNNER."

(C) CONT. Nº 88476 - S.O. Nº 953-21 *1 TO *52 INCL.
CONT. Nº 77713 - S.O. Nº 949-50 all

PURCHASE TO DWG

ASSY DASH No.	MODEL	NEXT ASSY	REQ
-2	PBY-5A	28A5605	1
-2	PBY-5A	28A5617	1
-0	OA-10	28U5056-2	1
-0	OA-10	28U5056-0	1
-0	PBY-5	5056-2	1
-0	PBY-5A	28U5056-0	1
-0	PBY-5	28U5056-2	1
-0	PBY-5	28U5056-0	1

REQUIREMENTS PER AIRPLANE

REPLACES — 6.0 CALC WT.

REPLACED BY — ACT WT

LIGHT ON SHOULDERS UNLESS OTHERWISE SPECIFIED 1/32 — SCALE 12" = 1'-0"

STAMP PART NUMBER WHERE SHOWN

PART No	STOCK	MATERIAL	SPEC.	1 LH REQ. -0	1 RH REQ. -2	LH REQ. -3	RH REQ. -4	LH REQ. -5	RH REQ.
[redacted]		ARMOR PLATE	NOTED						

PARTS LIST PER ASSY.

FINISH CODE

Z	ANODIC TREATMENT
P	P-27 PRIMER
AP	ALUMINIZED PRIMER
C	CADMIUM PLATE

AC — NAVY NOTED — HEAT TREAT — NOTED — FINISH

C.L. COOK 12-20-41 DRAFT — BILLING 12-23-41 CHECK — STRUCT. — MAT — APPROV. 1-15-42 ENG.

NAME ARMOR PLATE-ARM'T-30 CAL. BRM. GUN REAR

OPP. HAND

CONSOLIDATED AIRCRAFT CORP. SAN DIEGO, CALIF.

SIZE D — 28U5045

R

S.O. Nº 936-53 CONTRACT 70496

S.O. 949-25-1 CONT. 77713

S.O. 953-9 CONT. 88476 SERIAL # 02948 TO 02977 INCL.

(D)

30

LET	ALTERATION	DATE	BY
A	ADDED 2 ATTACH HOLES & DIMS	1-31-41	PLATZ
	CHANGED 4R TO 13 3/8 R & DIMS.		
B	S.O. 949-25-1 REQ. ADDED & NOTE	10-2-41	BILLING
	DIM. 25 WAS 26 1/2, 2 1/2 WAS 3		
	4 3/4 WAS 4 1/2, 3 5/8 WAS 3 1/2, 2 3/8 WAS 2 1/4		
	1 R WAS 1/2 R		
C	IN NOTES #1 CHANGED		
	SPEC FROM 03595 TO BU-ORD.		
	SPEC # 2775, CHANGED FINISH		
	FROM ZCP-ZAP TO P-GP		
	NO WT. CHG.	5-2-43	LINN

MCR179A-

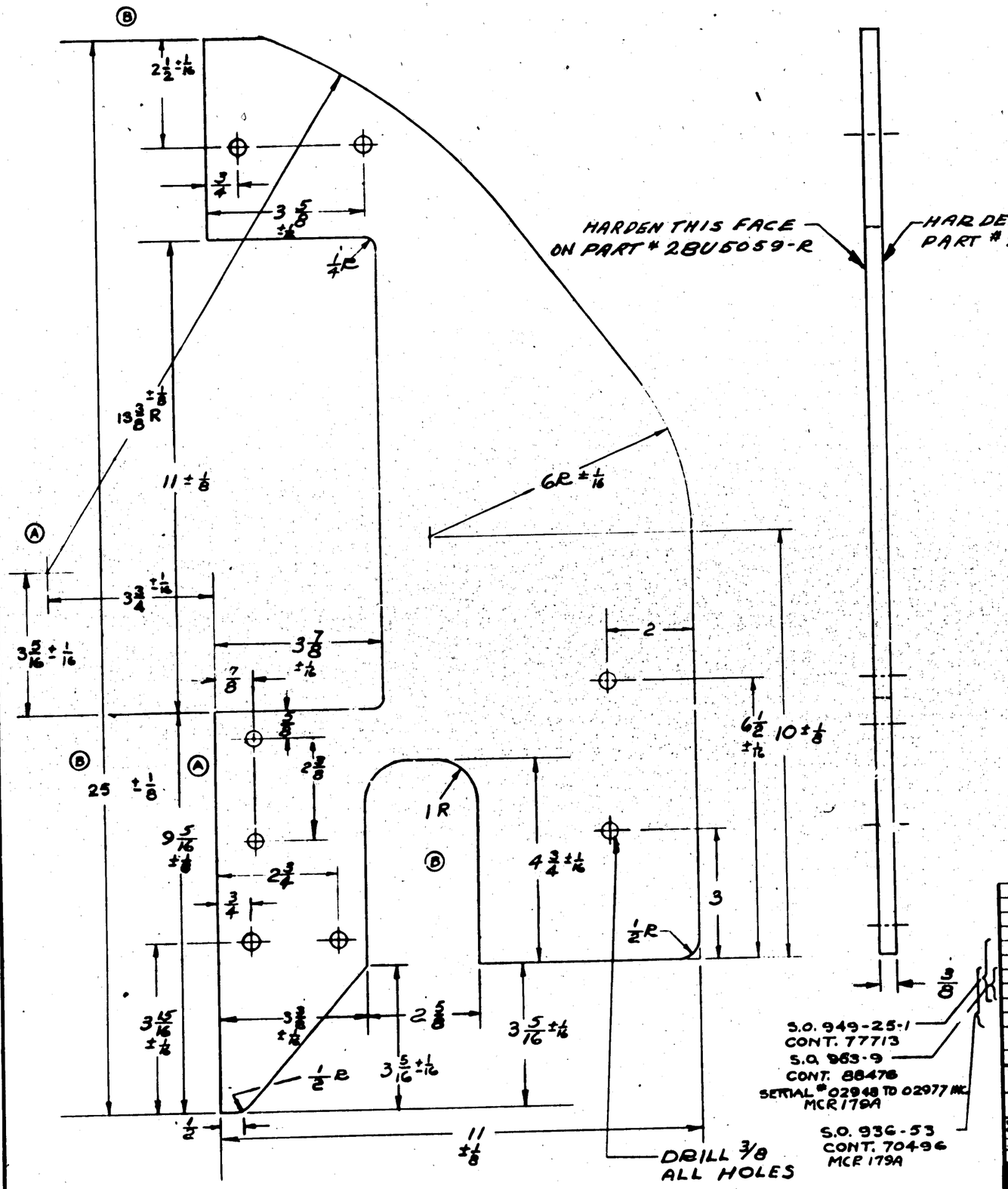

L.H. PART AS SHOWN - 28U5059
R.H. PART OPPOSITE - 28U5059-R

NOTES:-

Ⓑ

S.O. 949-25-1 CONT. 77713
S.O. 953-9 CONT. 88476

1. PART TO BE C.A.C. PROCURED & INSTALLED
   SPEC: BU-ORD SPEC # 2775 (FACE HARDENED)
   FINISH: P-GP Ⓒ

S.O. 936-53 CONT. 70496

2. PART TO BE PROCURED BY NAVY.
3. TEMPLATE TO BE FURNISHED BY CONSOLIDATED AIRCRAFT CORP FOR CHECK INSTALLATION.

4. HARDENED FACE TO BE STENCILED "THIS FACE TO BE INSTALLED AWAY FROM GUNNER".

FINISH CODE	
Z	ANODIC TREATMENT
P	P-27 PRIMER
GP	GREEN PRIMER
C	CADMIUM PLATE

PURCHASE TO DWG

R	OA-10	28U5058R	1																		
L	OA-10	28U5058L	1																		
R	PBY-5A	28U5058R	1																		
L	PBY-5A	28U5058L	1																		
R	PBY-5	28U5058R	1																		
L	PBY-5	28U5058L	1																		
ASSY. DASH NO.	MODEL	NEXT ASSY	REQ																		

REQUIREMENTS PER AIRPLANE

REPLACES 208 # CALC WT.

REPLACED BY ACT WT.

LIMIT OF DIMENSIONS UNLESS OTHERWISE SPECIFIED ± 1/32 — SCALE 6" = 1'-0"

STAMP PART NUMBER WHERE SHOWN

PART	STOCK	MATERIAL	SPEC.	LH REQ. -0	RH REQ. -2	LH REQ. -3	RH REQ. -4	LH REQ. -5	RH REQ.
	3/8 X	ARMOR PLATE	NOTED						

PARTS LIST PER ASSY.

A C			Vance	Yoder	Wes
NAVY NOTED	NOTED	12-20-41	4/4/41		
HEAT TREAT	FINISH	DRAFT	CHECK	STRUCT	MAT

Kline	Linn		
11-25-41			
APPROV	ENG.		

NAME ARMOR PLATE - ARM'T - SIDE WAIST GUN

OPP. HAND 28U5059R

CONSOLIDATED AIRCRAFT CORP. SAN DIEGO, CALIF.

DWG. SIZE D

28U5059

28U5059

K 28U5059

LET	ALTERATION	DATE	BY
A	ADDED DIM. 1/16, 1; CHANGED DIMS 3 1/2 TO 3 1/4, 26 1/4 TO 25 5/8	9-2-41	[illegible]
B	S.O. 949-25 REQ. & NOTE ADDED	10-2-41	[illegible]
	DIM. 1/4, 1 REMOVED. 28 WAS 28 1/4.		
	2 1/2 WAS 3 1/4. ADDED DIMS. 2, 2		
	9 1/2 R 5/16. REMOVED DIM. 6.87 R		
C	CUTOUT ADDED WITH DIMS. 10 1/2, 2, 2 1/2 & 1/4 R. WEIGHT WAS 29.2#	12-24-41	[illegible]
D	CHANGED SPEC FOR ARMOR PLATE IN NOTE #1 FROM 0.S.595 TO BU. ORD. SPEC #2775. CHANGED FINISH FROM ECP-ZAP TO P-GP. NO WT. CHG.	6-1-43	LINN

MKR 179A

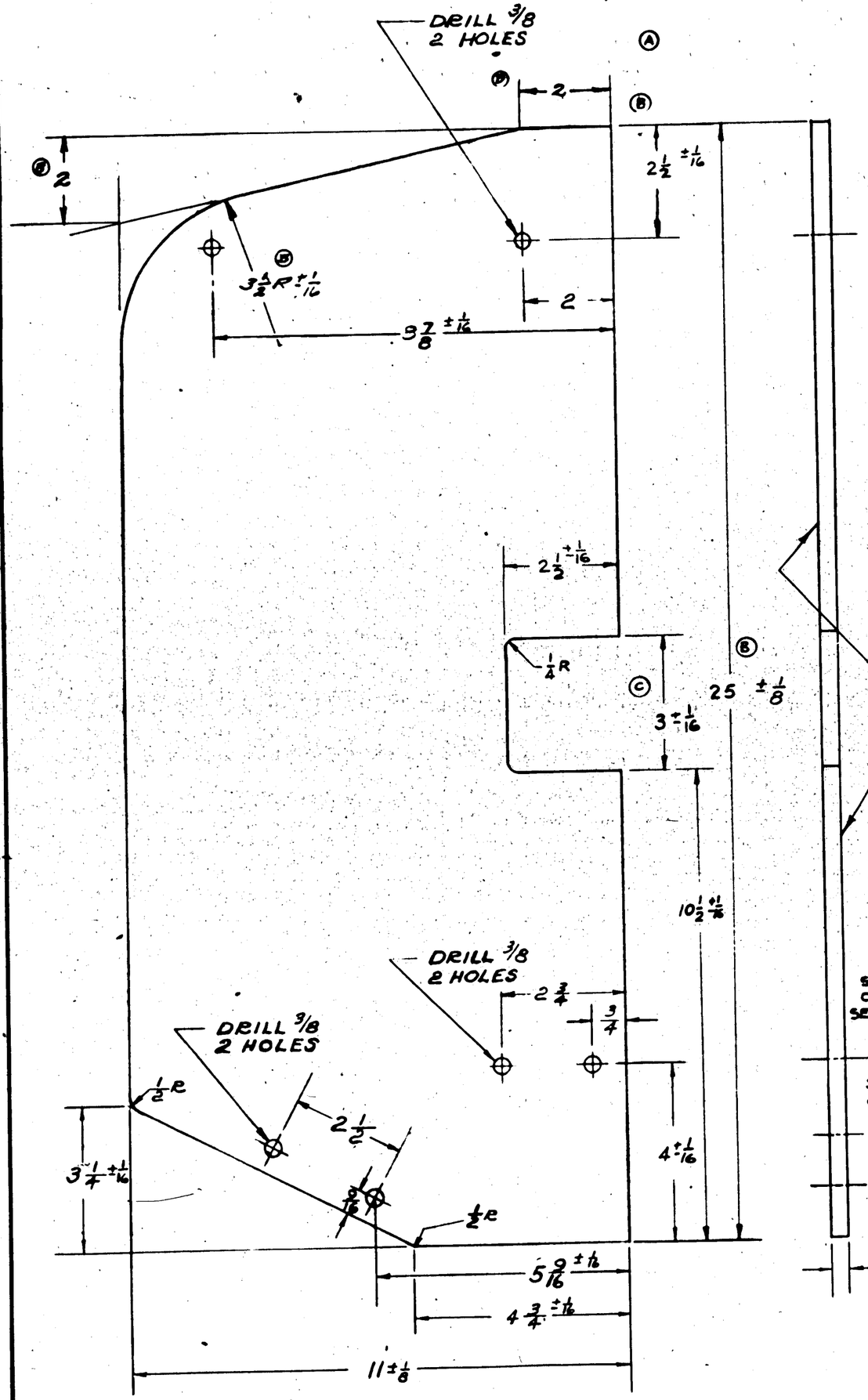

NOTE:

(B)

S.O. 949-25-1 CONT. 77713
S.O. 953-9 CONT. 8847G
S.O. 936-53 CONT. 70496

1. PART TO BE C.A.C. PROCURED & INSTALLED. SPEC. BU. ORD. SPEC # 2775 (FACE HARDENED) FINISH. P-GP (D)
2. PART TO BE PROCURED BY NAVY.
3. TEMPLATE TO BE FURNISHED BY CONSOLIDATED AIRCRAFT CORP FOR ... CHECK INSTALLATION.
4. HARDEND FACE TO BE STENCILED, "THIS FACE TO BE INSTALLED AWAY FROM GUNNER."

L.H. PART SHOWN - 28U5060
R.H. PART OPPOSITE 28U5060-R

FINISH CODE	
Z	ANODIC TREATMENT
P	P-27 PRIMER
GP	GREEN PRIMER
C	CADMIUM PLATE

PURCHASE TO DWG

R	PBY-5A	28U5058R	1
L	PBY-5A	28U5058L	1
R	PBY-5	28U5058R	1
L	PBY-5	28U5058L	1
ASSY. DASH NO.	MODEL	NEXT ASSY	REQ

REQUIREMENTS PER AIRPLANE

REPLACES — CALC WT. 25.4#
REPLACED BY — ACT WT
LIMIT ON DIMENSIONS UNLESS OTHERWISE SPECIFIED +/- 1/32
SCALE 6" = 1'-0"
STAMP PART NUMBER WHERE SHOWN

PART NO	STOCK	MATERIAL	SPEC.	LH REQ. -0	RH REQ. -2	LH REQ. -3	RH REQ. -4	LH REQ. -5	RH REQ.
	3/8X	ARMOR PLATE	NOTED						

PARTS LIST PER ASSY.

AC					
NAVY NOTED	NOTED				
HEAT TREAT	FINISH	DRAFT	CHECK	STRUCT.	MAT	APPROV	ENG.
		M.M.H. 12-30-41	2/14/41			H.F.T. 2/14/41	

NAME ARMOR PLATE - ARM'T. - SIDE WAIST GUN - INBD.
OPP. HAND 28U5060-R
CONSOLIDATED AIRCRAFT CORP. SAN DIEGO, CALIF.
DWG. SIZE D
28U5060

28U5060

LET	ALTERATION	DATE	BY
A	CHG'D -6 TO -6L & 6R.	2-7-43	[illegible]
B	CREATED -GASSY MENTION TO -GASSY EXCEPT 28U5106 4/20/43 REPLACES 28U5066 WT. CHG NEG.) -2 & -5 REPLACES -4.		
C	REMOVED -2 ASS'Y FROM A/M. & FACE/DWG. NEG. WT. CHG.	9-17-43	

PBY-5
PBY-5A
NOR 25602

NOR 25602

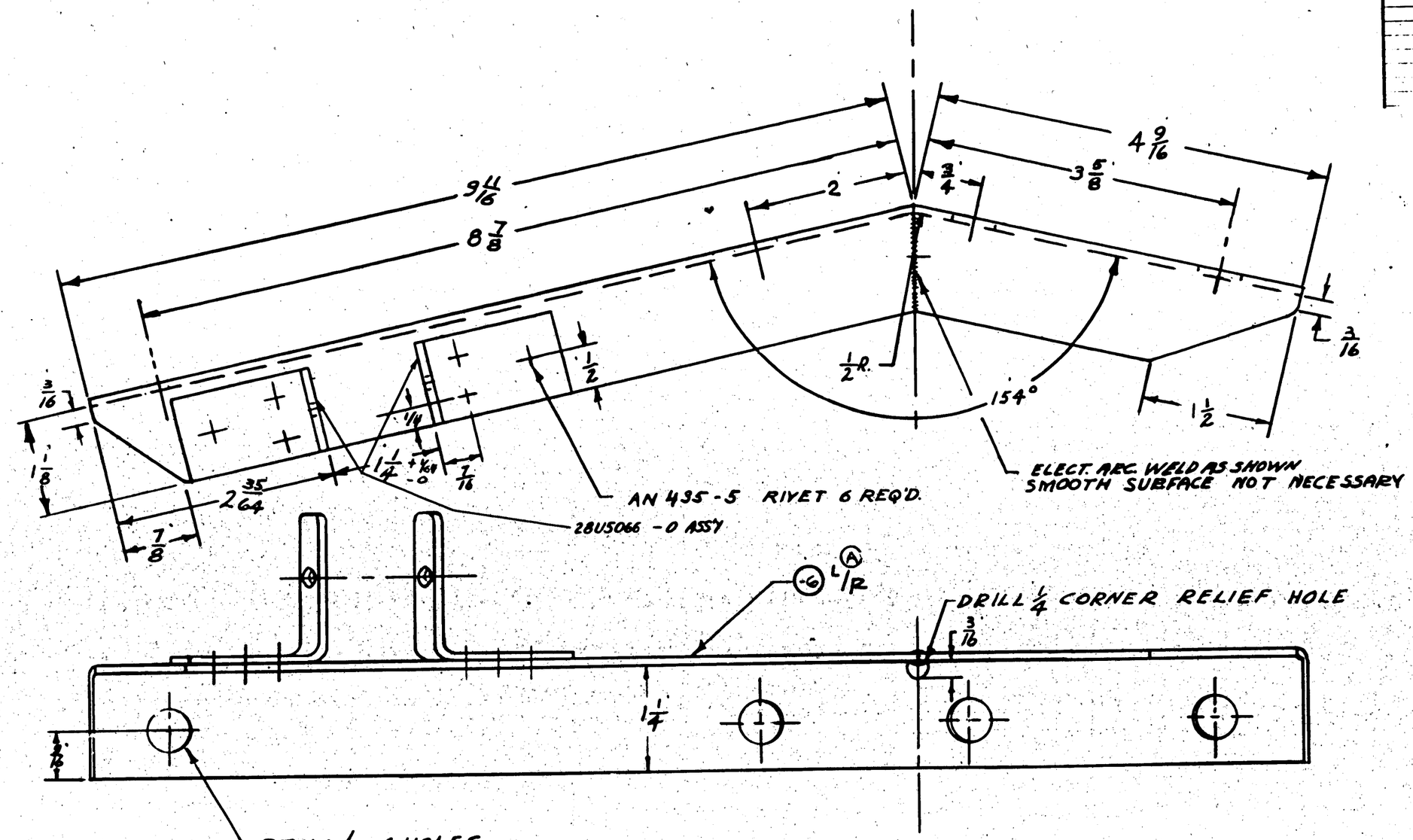

NOTE
1. BEND RADII 3/16
2. BREAK ALL SHARP CORNERS
3. CADMIUM PLATE -6 AFTER WELDING
4. PRIME AFTER RIVETING
5. NORMALIZE -6 AFTER WELDING. 90000 TO 125000

©

S.O. NO. 936-53
CONTRACT 70496
" 88476
" 77713
" NOa(N)464
" 91876

	MODEL	NEXT ASSY.	REQ
R	PBY-5A	28U5058R	1
L	PBY-5A	28U5058L	1
R	PBY-5	28U5058R	1
L	PBY-5	28U5058L	1

ASSY. DASH NO.

REQUIREMENTS PER AIRPLANE

REPLACES — CALC WT. 1.03

REPLACED BY — ACT. WT.

LIMIT OF DIMENSIONS UNLESS OTHERWISE SPECIFIED ± 1/32 1°

SCALE 12"=1'-0"

STAMP PART NUMBER WHERE SHOWN

PART NO	STOCK	MATERIAL	SPEC.	LH 4H REQ.	LH RH REQ.	LH RH REQ.	LH RH REQ.	LH RH REQ.
28U5066					2 2			
AN435-5					6 6			
-6R	094 x 2½ x 14-3/8	C.M. STEEL	47514	1				
-6L	094 x 2½ x 14-3/8	C.M. STEEL	47514		1			

PARTS LIST PER ASSY. -0 -2 -3 -4 -5

AC
NAVY NOTED
HEAT TREAT

NOTED
FINISH

C.L. COOK Wayne J. [illegible] 17/6
4226 1. 2/19/91 FRF
DRAFT CHECK STRUCT. MAT APPROV. ENG

NAME SUPPORT-ARM'T-SIDE WAIST GUN ARMOR PLATE UPPER

OPP. HAND 28U5062-R

CONSOLIDATED AIRCRAFT CORP. SAN DIEGO, CALIF.

DWG. SIZE D

28U5062

Note:
28U5062 L+R Not included in weight empty of Airplane.

28U5062 R

LET	ALTERATION	DATE	BY
C	REDRAWN & REVISED	5-5-43	LINN
D	REPLACED -6L (1) & -6R(1) WITH -8(2) REPLACED -7L(1) & -7R(1) WITH -9(2)		
	NO WEIGHT CHANGE	9-5-43	LINN
E	REMOVED FROM FACE OF DRWG. NOTE. 1-CAC PROCURED & INSTALLED ALSO REMOVED "ALL SPARES" FOR -8 & -9 ASSY'S NO. WT. CH'G.	8-24-45	CHAMBERS

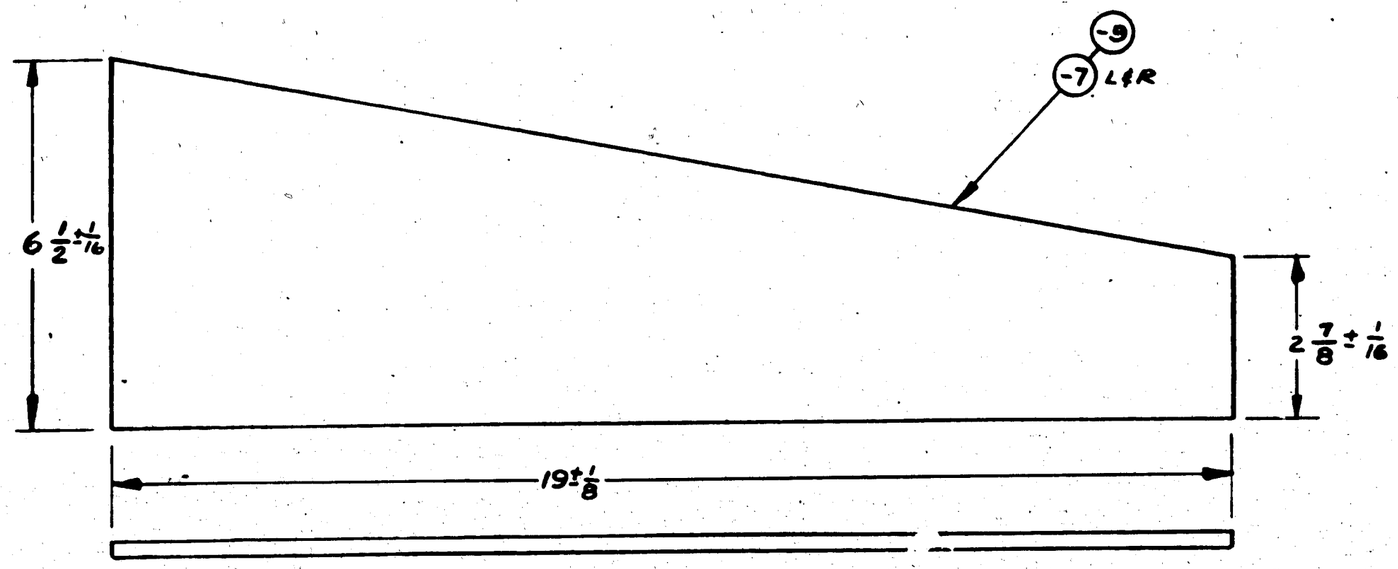

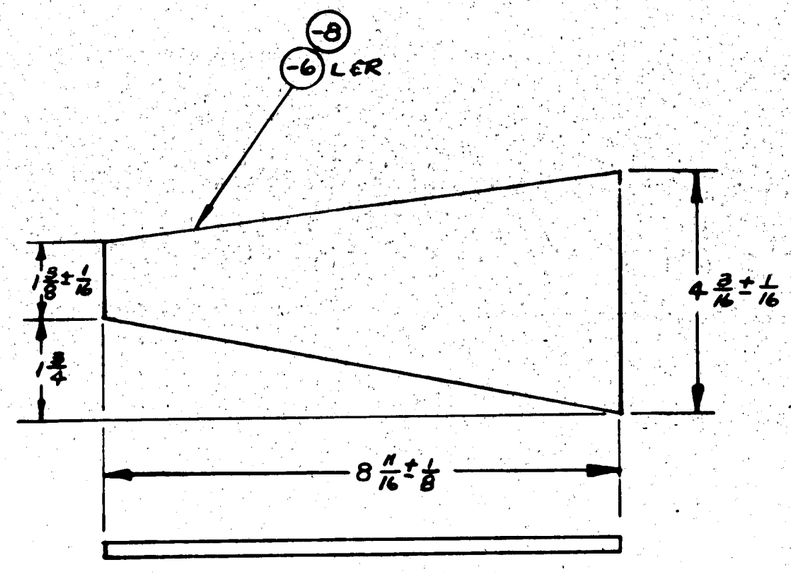

DASH NO	WT. IN LBS
-6	3.4
-7	12.47
-8	3.4
-9	12.47

CONT. NOAC14464
CONT. 91876
CONT. NOAC14464
CONT. 91876

PBY-5A { 70496, 77713, 88476 ONLY
PBY-5- 70496
PBY-5B-88477

ASSY. DASH NO.	MODEL	NEXT ASSY.	REQ'D
-9	PBY-5A	28U5072	2
-9	PBY-5		2
-8	PBY-5A		2
-8	PBY-5		2
-7R	PBY-5B		1
-7L	PBY-5B		1
-6R	PBY-5B		1
-6L	PBY-5B		1
-7R	PBY-5A		1
-7L	PBY-5A		1
-6R	PBY-5A		1
-6L	PBY-5A		1
-7R	PBY-5		1
-7L	PBY-5		1
-6R	PBY-5		1
-6L	PBY-5	28U5072	1

REQUIREMENTS PER AIRPLANE

REPLACES 28U5072 "B" CHANGED — NOTED — CALC. WT.
REPLACED BY — AGY. WT.
SCALE 6"=1'-0"
STAMP PART NUMBER WHERE SHOWN

PART No.	STOCK	MATERIAL	SPEC.	LH REQ.	RH REQ.	LH REQ.	RH REQ.	LH REQ.	RH REQ.	LH REQ.	RH REQ.	LH REQ.	RH REQ.
-9	1/4 X 6 5/8 X 19 1/8	HOMOGENEOUS ARMOR PLATE	QS 2498										
-8	1/4 X 4 1/4 X 8 7/8												
-7R	1/4 X 6 5/8 X 19 1/8												
-7L	1/4 X 6 5/8 X 19 1/8												
-6R	1/4 X 4 1/4 X 8 7/8												
-6L	1/4 X 4 1/4 X 8 7/8	HOMOGENEOUS ARMOR PLATE	QS 2498										

PARTS LIST PER ASSY.

APPROVED FOR TOOLING BY
E. E. Dalton
5-

AC		1-3-41	M.V.	CORBIN	J.F.B.	KLEIN	
NAVY NOTED	P-GP	W.N. SMITH	LOC		E.N.S.	8-8-41	R
HEAT TREAT	FINISH	DRAFT	CHECK	STRUCT	MAT	APPROV	ENG.

NAME
ARMOR PLATE-BULKHEAD STA. 5

CONSOLIDATED AIRCRAFT CORP. SAN DIEGO, CALIF.

OPP. HAND

DWG. SIZE D — 28U5072

R 28U5072

LET	ALTERATION	DATE	BY
D	REDRAWN & REVISED		
	REPLACED -L(1) & -R(1) WITH		
	-6(2) NO WT. CHANGE	5-4-43	LINN
E	REMOVED NOTE #2 "C.AC. PRO-		
	CURED & INSTALLED NO WT. CHG.	8-2-43	CHAMBERS

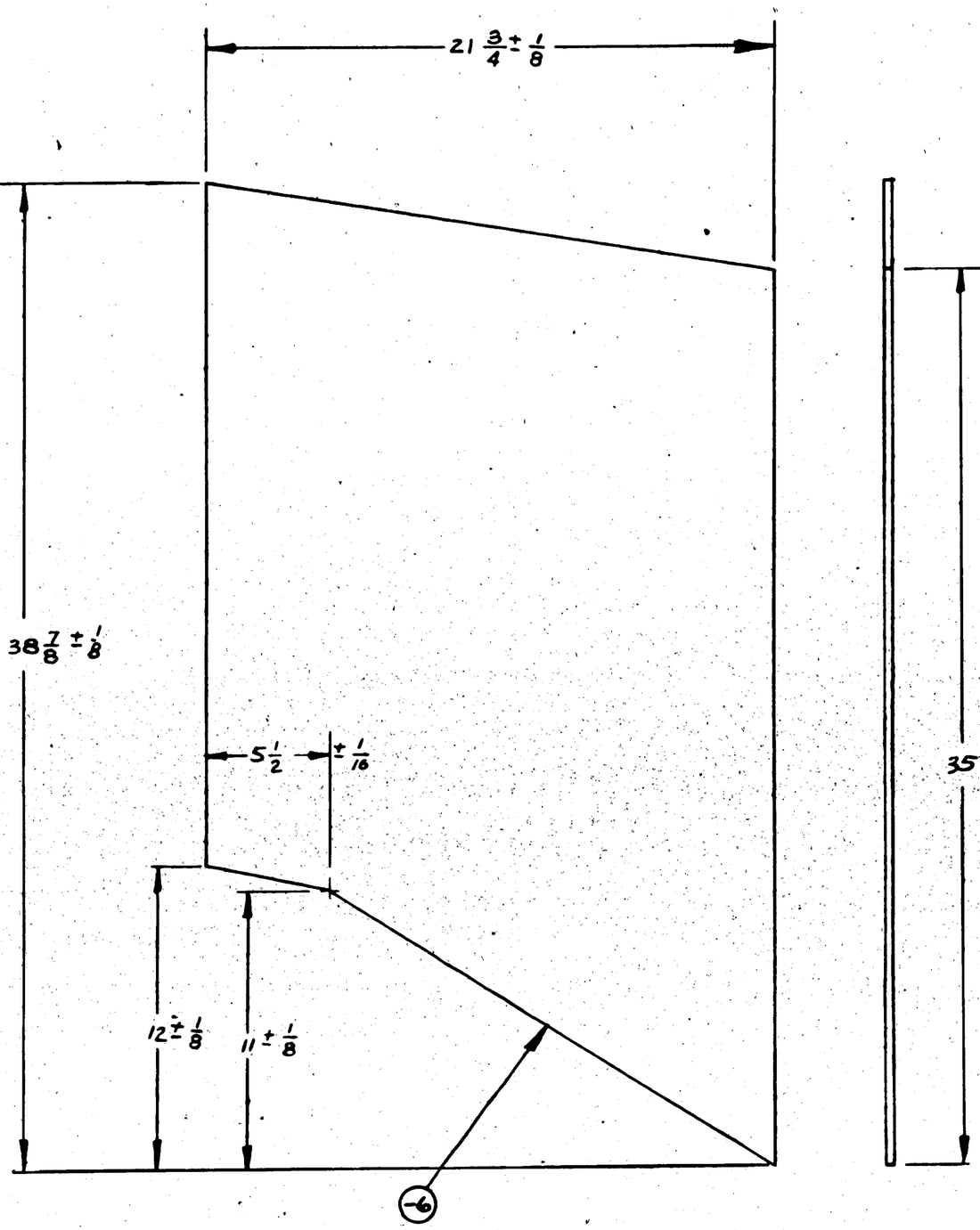

NOTES

1.- RESTAMP 28U5076-L & -R PARTS MADE TO CONFORM TO SPEC# 03.2498 (HOMOGENEOUS) ARMOR PLATE TO -2

APPPOVED FOR TOOLING BY
E. J. Dalton
5-31-43

ASSY. DASH NO.	MODEL	NEXT ASSY.	QTY.
-6	PBY-5A	28U5077	2
-4	PBY-5	28U5077	2

REQUIREMENTS PER AIRPLANE

REPLACES 28U5076 "D" CHGD. 5178 — CALC. WT. 46.234
REPLACED BY — ACT. WT.

UNLESS OTHERWISE SPECIFIED DIMENSIONS ARE IN INCHES AND TOLERANCES ARE AS FOLLOWS: ± 1/32 — SCALE

STAMP PART NUMBER WHERE SHOWN

PART NO.	STOCK	MATERIAL	SPEC.	LH REQ.	RH REQ.	LH REQ.	RH REQ.	LH REQ.	RH REQ.	LH REQ.	RH REQ.	LH REQ.	RH REQ.
-6	1/4 X 21 3/8 X 40	HOMOGENEOUS ARMOR PLATE	Q.S.2498										

PARTS LIST PER ASSY. — -0 | -2 | -3 | -4 | -5

AC		1-9-40			J.F.R.	KLEIN
NAVY NOTED	P-6P	DESIGNER	M.E.G.	GREEN	12-8-41	R
HEAT TREAT	FINISH	DRAFT	CHECK	STRUCT	MAT	APPROVED

NAME: ARMOR PLATE TUNNEL GUN — OPP. HAND

CONSOLIDATED AIRCRAFT CORP. SAN DIEGO, CALIF. — SIZE D — 28U5076

28U5076 R

LET	ALTERATION	DATE	BY
A	REMOVED HOLE DIMENS. & DRILL NOTES.	4-[illegible]	[illegible]

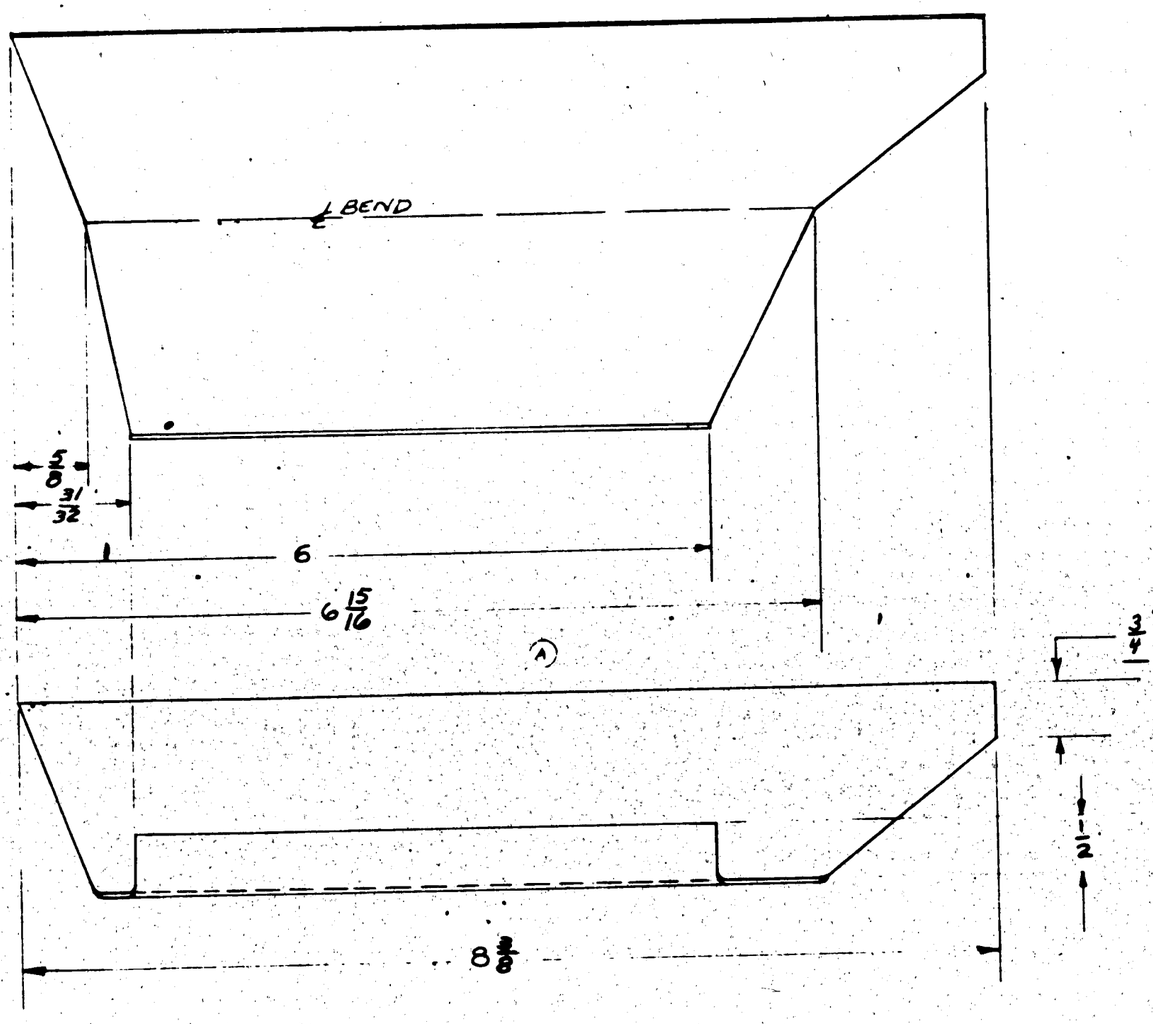

HEAT TREAT :- NORMALIZE 90,000 TO 125,000

ALL BEND RADII 1/8

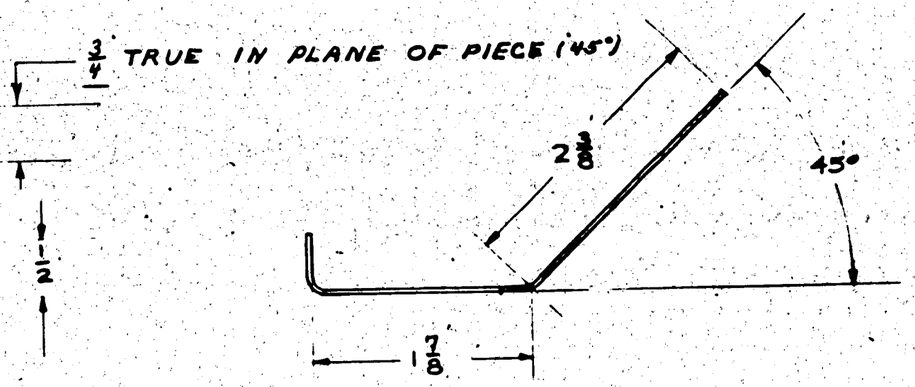

S.O. No 936-53
CONTRACT 70496

ASSY. DASH NO.	MODEL	NEXT ASSY.	REQ.
	PBY-5A	28U5074	1
	PBY-5	28U5074	1

REQUIREMENTS PER AIRPLANE

REPLACES — CALC WT.

REPLACED BY — ACT. WT.

LIMIT ON DIMENSIONS UNLESS OTHERWISE SPECIFIED: ± 1/32 — SCALE 12"=1'-0"

STAMP PART NUMBER WHERE SHOWN

PART NO.	STOCK	MATERIAL	SPEC.	LH REQ.	RH REQ.	LH REQ.	RH REQ.	LH REQ.	RH REQ.	LH REQ.	RH REQ.	LH REQ.	RH REQ.
	.044 x 4 7/8 x 8 1/4	C.N. STEEL	47S14	1									
				-0		-2		-3		-4		-5	

PARTS LIST PER ASSY.

AC		CANVELL					
NAVY NOTED	NONE	1-9-41			FRF		
HEAT TREAT	FINISH	DRAFT	CHECK	STRUCT.	MAT	APPROV.	ENG.

NAME CHANNEL-ARM'T.-30 CAL. B.A.M. GUN-REAR ARMOR PLATE-BOW GUN.

OPP. HAND

CONSOLIDATED AIRCRAFT CORP. SAN DIEGO, CALIF.

DWG. SIZE D — 28U5080

Note
USEFUL LOAD, Not incl[illegible]
in weight empty [illegible]

LET	ALTERATION	DATE	BY

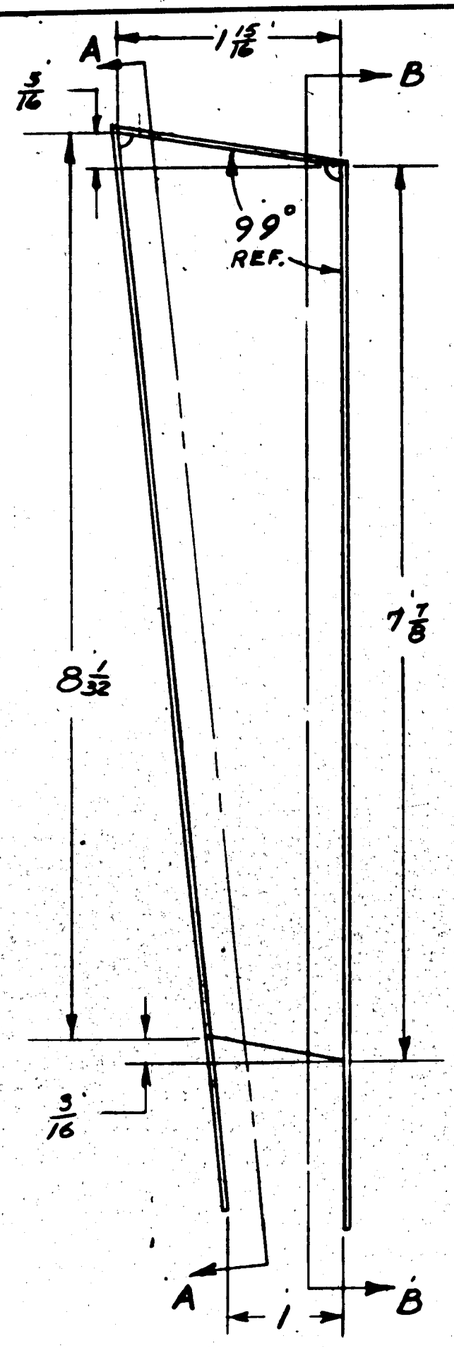

VIEW A-A

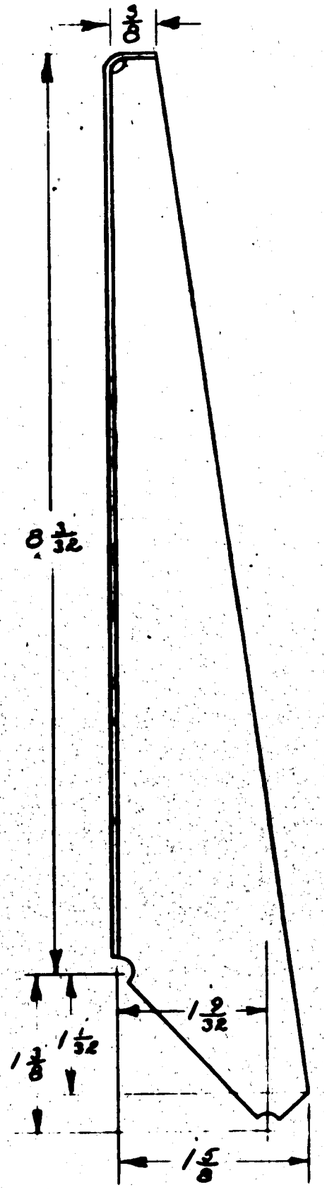

VIEW B-B

NOTES:

1. HEAT TREAT :- NORMALIZE 90,000 TO 125000
2. BEND & RELIEF RADII 1/8

S.O. No 936-59
CONTRACT 70496

ASSY. DASH No.	MODEL	NEXT ASSY.	REQ
	PBY-5A	2805078	1
	PBY-5	2805074	1

REQUIREMENTS PER AIRPLANE

REPLACES .356 CALC. WT.

REPLACED BY AGT. WT.

LIMIT ON DIMENSIONS UNLESS OTHERWISE SPECIFIED: ± 1/32 & 1/2° | SCALE 1 12" = 1'0"

STAMP PART NUMBER WHERE SHOWN

PART NO.	STOCK	MATERIAL	SPEC.	LH REQ.	RH REQ.	LH REQ.	RH REQ.	LH REQ.	RH REQ.	LH REQ.	RH REQ.	LH REQ.	RH REQ.
	.044 x 4 5/8 x 10 1/2	C.M. STEEL	47314	1									

PARTS LIST PER ASSY. -0 -2 -3 -4 -5

AC		R.S. SHARP 1/23/41	S.S.	W.C.B.	
NAVY NOTED	NONE	1-23-41		FAF	
HEAT TREAT	FINISH	DRAFT	CHECK	STRUCT.	MAT	APPROV.	ENG.

NAME BK'T-ARM-30 CAL. B.A.M. GUN-REAR ARMOR PLATE BOW GUN-R.H. OPP. HAND

CONSOLIDATED AIRCRAFT CORP. SAN DIEGO, CALIF.

DWG. SIZE D 2805081

Note USEFUL LOAD, N... W...

LET	ALTERATION	DATE	BY

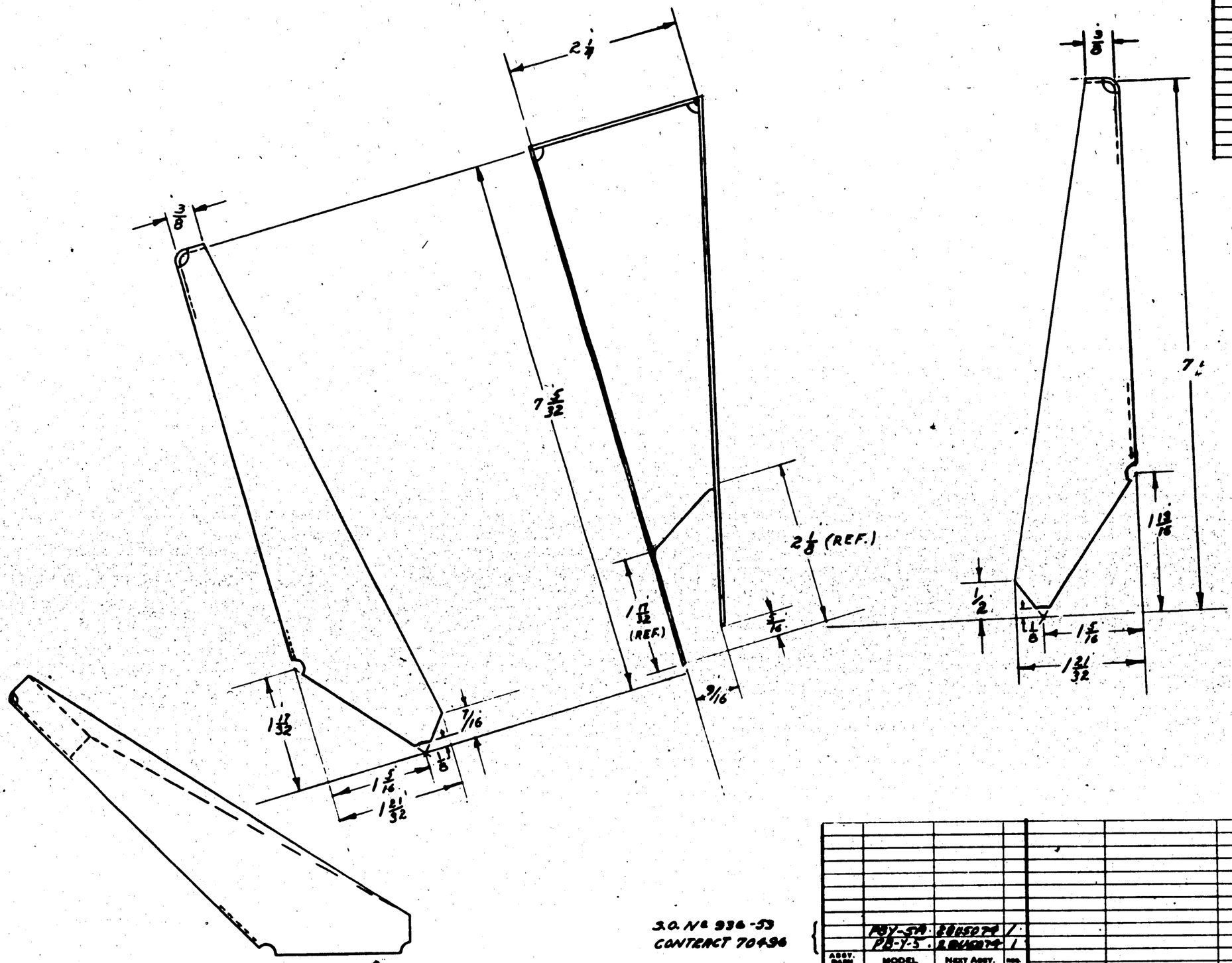

ALL BEND & RELIEF RADII 1/8

HEAT TREAT: NORMALIZE.
90,000 TO 125000

30. No. 936-53
CONTRACT 70496

ASSY. DASH No.	MODEL	NEXT ASSY.	REQ.
	PBY-5A	2B85078	1
	PB-Y-5	2B45078	1

REQUIREMENTS PER AIRPLANE

REPLACES — ASY. WT.

REPLACED BY — ASY. WT.

SCALE 12" = 1'0"

± 1/32

STAMP PART NUMBER WHERE SHOWN

PART No.	STOCK	MATERIAL	SPEC.	LH REQ.	RH REQ.	LH REQ.	RH REQ.	LH REQ.	RH REQ.	LH REQ.	RH REQ.	LH REQ.	RH REQ.
	.064 x 4½ x 8 - CM. STEEL		42-S-14										
PARTS LIST PER ASSY.				-0		-2		-3		-4		-5	

AC		SHARP					
NAVY NOTED	NONE	1-12-42			FAF		K
HEAT TREAT	FINISH	DRAFT	CHECK	STRUCT.	MAT	APPROV.	ENG.

NAME BRACKET-ARM'T-30 CAL. B.A.M. GUN REAR ARMOR PLATE BOW GUN L.H.

OPP. HAND 2

CONSOLIDATED AIRCRAFT CORP. San Diego, Calif.

SIZE D — 2BU5082

Note: USEFUL LOAD. Not included in weight empty of Airplane.

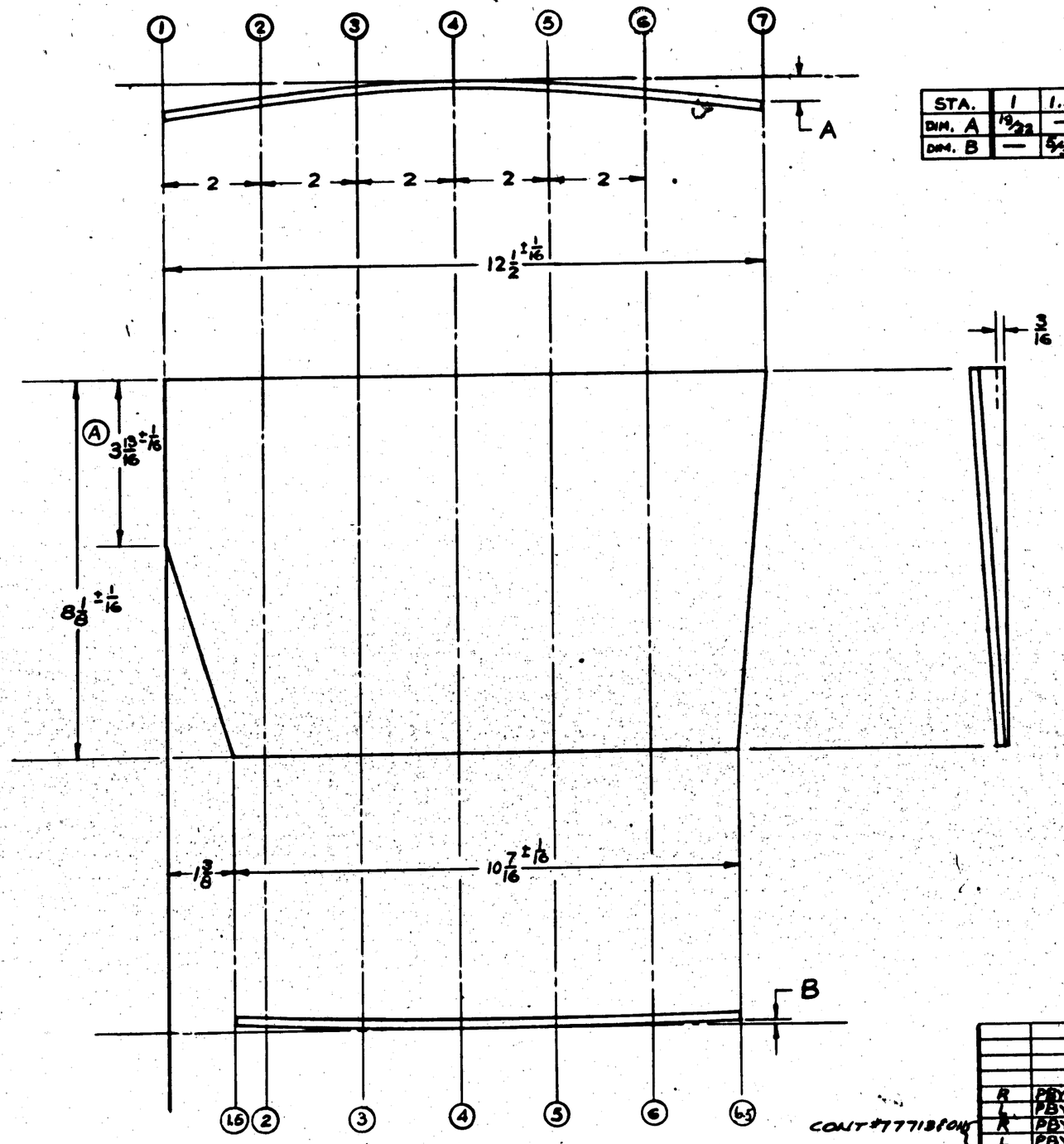

E.O.# A43522

E.O.# A97768 M.C.R.# ITEM

STA.	1	1.5	2	3	4	5	6	6.5	7
DIM. A	19/32	—	5/16	9/32	0	1/16	7/32	—	17/32
DIM. B	—	5/32	1/8	1/16	1/64	0	1/64	5/64	—

LET	ALTERATION	DATE	BY
A	CHGD. $3\frac{1}{16} \pm \frac{1}{16}$ DIM TO $3\frac{1}{16} \pm \frac{1}{16}$		
	ADDED NOTE NO 2. ADDED CONTRACT NOS	3-27-42	[illegible]
B	CONT #77718 FOR WAS CONT #88476 #58 FOR - NO WT. CHG.	4-24-42	HINES
C	SPEC. 0.S. 2498 WAS 0S. 2390 NO WT. CHG.	8-4-43	DAVIDSON
D	REMOVED FINISH NOTE ON FACE OF DWG. FINISH-ANODIZE-CAD PLATE - P-37 PRIME REMOVED FROM B/M FINISH BLOCK. 2 - ECP # REPLACED WITH P-6P	8-11-43	LINN

NOTES:

1. ARMOR PLATE TO BE PROCURED UNDER BUR. OF AERON. ARMOR PLATE PROCUREMENT POLICY OF MAY 29, 1941.
2. PART NO. 28U5067-10 L OR R MAY BE USED IN PLACE OF THIS D'WG.

(D)

PURCHASE TO DWG.

CONT #77718 FOR

CONT. #91876

ASSY. DASH No.	MODEL	NEXT ASSY.	REQ.
R	PBY-6B	28U5071	1
L	PBY-6B	28U5071	1
R	PBY-5A	28U5071	1
L	PBY-5A	28U5071	1
R	PBY-5	28U5071	1
L	PBY-5	28U5071	1

REQUIREMENTS PER AIRPLANE

REPLACES 28U5067-10 L&R — CALC. WT. 5.0

REPLACED BY — ASSY. WT.

LIMIT OR ENGINEERING DETAILS OTHERWISE ORDERED: ± 1/32

SCALE 6" = 1'-0"

STAMP PART NUMBER WHERE SHOWN

PART No.	STOCK	MATERIAL	SPEC.	LH REQ.	RH REQ.	LH REQ.	RH REQ.	LH REQ.	RH REQ.	LH REQ.	RH REQ.	LH REQ.
	3/16	ARMOR PLATE	0S2498									
PARTS LIST PER ASSY.				-0		-2		-3		-4		-5

A C		BILLING						
NAVY ——	P-6P (P-27)	1-7-42			4-8-42			
HEAT TREAT	FINISH	DRAFT	CHECK	STRUCT	MAT	APPROV	ENG.	

NAME PLATE - SUMP ARMOR - SIDE CENTER

OPP. HAND 28U5091-R

CONSOLIDATED AIRCRAFT CORP. SAN DIEGO, CALIF.

DWG. SIZE D — 28U5091

R

LET	ALTERATION	DATE	BY
A	CHAD DIMS. 1 1/16 TO 1 3/32 ± 1/16		
	6 1/16 ± 1/16 TO 6 3/32 ± 1/16, 3 3/16 ± 1/16 TO		
	3 1/32 ± 1/16, 10 1/32 ± 1/16 TO 10 3/16 ± 1/16.		
	REMOVED 8 3/16 ± 1/16 DIM. ADDED		
	1 3/16 & 11 3/16 DIMS. 2R CORNER		
	WAS SQUARE ADDED NOTE 1 & 2.	5-27-42	SPENCER
	ADDED CONTRACT NOS.		
E.O.#A8522 B	CONT.#77713 & ON WAS CONT.		
	#88476 #33 & ON - NO WT. CHG.	6-24-42	HINES
E.O.#A49135 C	REMOVED STA 1 THRU 6, ACB DIM. CHART.		
	DIMS 3 11/32 ± 1/16 & 11 1/16, 2 1/4 R. WAS		
	2R. ADDED SECT A-A DIMS C, D & B		
	WT. 4 WAS 4.2	8-11-42	HEGLER
E.O.#AB8400 D	ADDED: DIM 1/8, "B" 1/2, 2 1/4 R & 3/8		
	WIDE B. 2 1/4 RS. 1/8 RESP. WT. CHG NEG.	12-8-42	WINTER
E.O. A97756 E	SPEC. OS2498 WAS OS2380.		
MCR 179-1	WT CHG NEG	12-8-42	WINTER
F	REMOVED FINISH NOTE ON		
	FACE & RDG. FINISH-ANODIZE		
	-CAD. PLATE-P27 PRIME		
	REMOVED FROM E/M FINISH		
	BLOCK 2-ECP & REPLACED		
	WITH P-GP	2-11-43	LINN

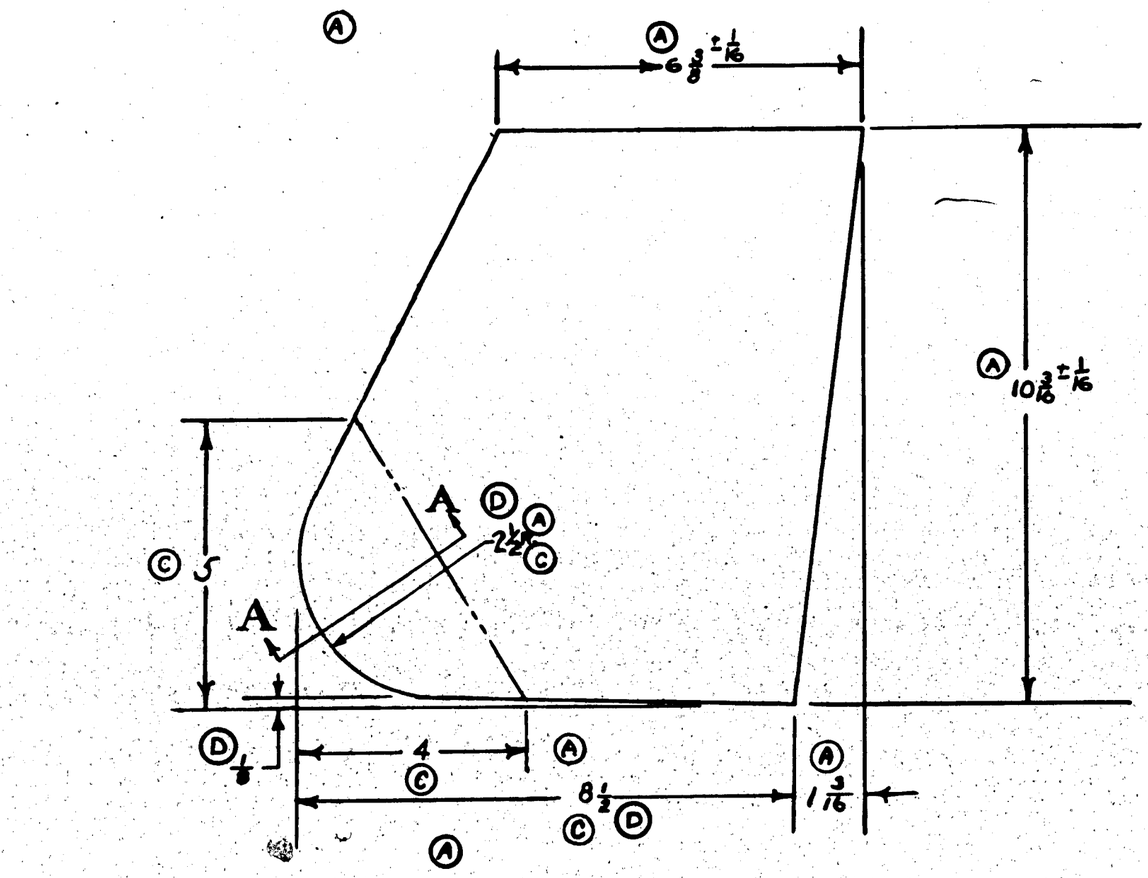

NOTES:

1. ARMOR PLATE TO BE PROCURED UNDER BUR. OF AERON. ARMOR PL. PROCUREMENT POLICY OF MAY 29, 1941.
2. PART NO. 28U5067-8 1/2 MAY BE USED IN PLACE OF THIS DWG.

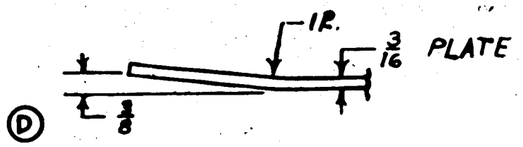

C SECTION A-A

PURCHASE TO DWG.

CONT #77713 & ON
CONT. #91876 MCR #179-1

ASSY. DASH NO.	MODEL	NEXT ASSY.	REQ'D
R	PBY-5B	28U5071	1
L	PBY-5B	28U5071	1
R	PBY-5A	28U5071	1
L	PBY-5A	28U5071	1
R	PBY-5	28U5071	1
L	PBY-5	28U5071	1

REQUIREMENTS PER AIRPLANE

REPLACED 28U3067-8 1/2 — 4 LBS. WT.
REPLACED BY — ACT. WT.
UNIT OR DIMENSIONS UNLESS OTHERWISE SPECIFIED ± 1/32 — SCALE 6"-1'-0"
STAMP PART NUMBER WHERE SHOWN

@ 3/16 — ARMOR PLATE OS 2498

PART NO.	STOCK	MATERIAL	SPEC.	LH REQ.	RH REQ.	LH REQ.	RH REQ.	LH REQ.	RH REQ.	LH REQ.	RH REQ.	LH REQ.	RH REQ.
PARTS LIST PER ASSY.				-0		-2		-3		-4		-5	

AC		BILLING						
NAVY ——	P-GP (P-27)	1-7-42			4-F-42			
HEAT TREAT	FINISH	DRAFT	CHECK	STRUCT	MAT	APPROV	ENG.	

NAME PLATE - SUMP ARMOR - SIDE FWD.

OPP. HAND 28U5092 - R

CONSOLIDATED AIRCRAFT CORP. SAN DIEGO, CALIF.

DWG. SIZE D — 28U5092

R

LET	ALTERATION	DATE	BY
A	REMOVED TOLERANCE FROM SCHED OF DIMENSIONS		
	9⅝ ± 1/16 WAS 10 1/64 ± 1/16 8 13/16 ± 1/16 WAS 8 15/16		
	REMOVED 8 3/16 & 2 3/4 DIMENS &		
	ADDED 8 3/4, 7 3/8 & 9/16 DIMENS		
	REMOVED TABULATED DIMENS		
	28 W.T. WAS 4 & ADDED NOTE		
	NAS ADDED CONT. NOS.	5-28-42	BRAMOS
E.O.#A43522 B	CONT. #77713 & #88477 WAS CONT. #88476 #5361 & ON REQ'L. DR'N		
	BLK. NO WT CHG.	6-24-42	MARSH
E.O.#A97715 MCR# 178-1 C	SPEC "02498" WAS "02380"	11-23-42	DAVIDSON
D	REMOVED -L(1)-R(1) & REPLACED WITH -6 (2)		
	NO WT CHANGE	LINN	5-29-43

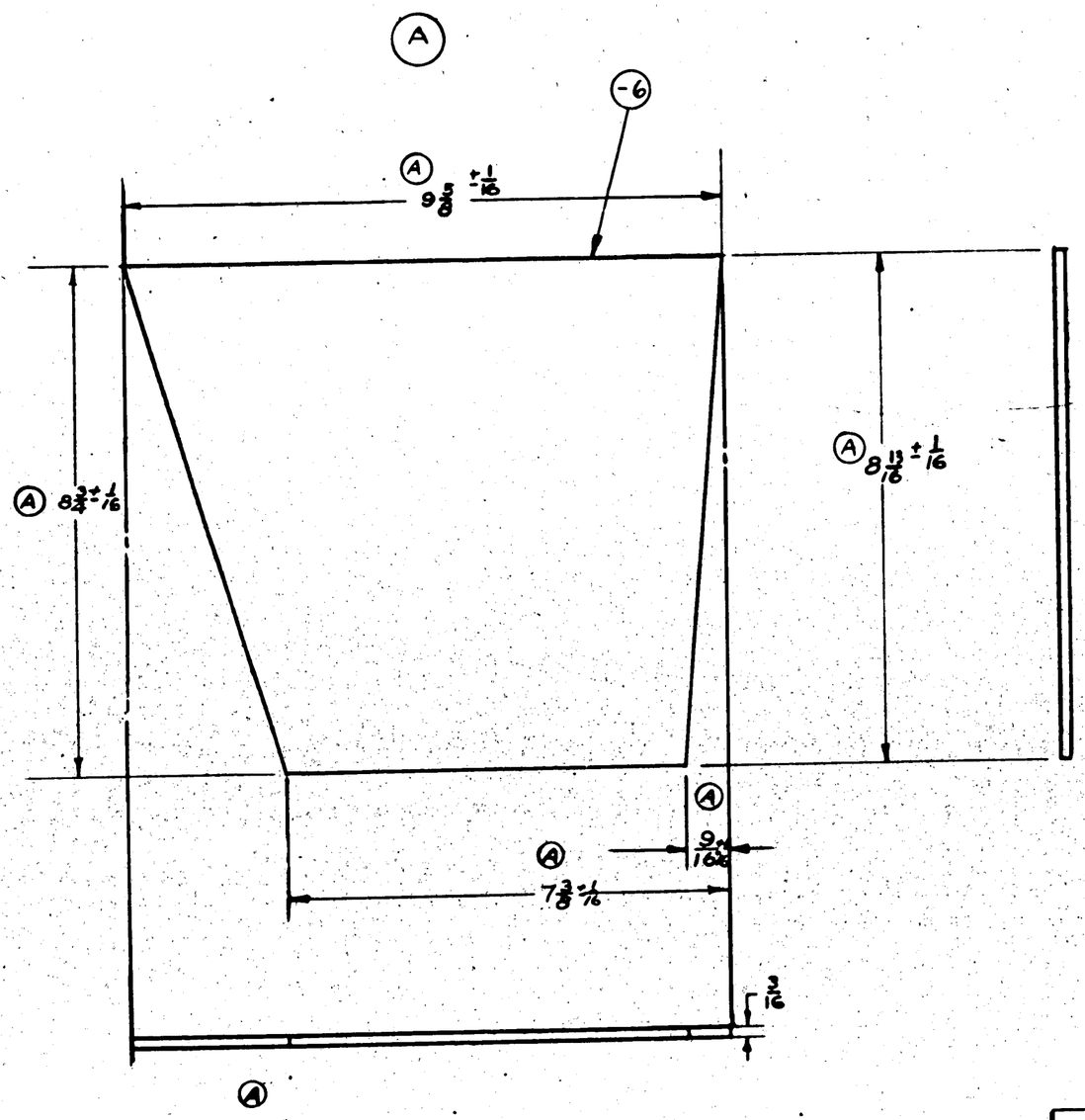

NOTES:
1. ARMOR PLATE TO BE PROCURED UNDER BUR. OF AERON. ARMOR PLATE PROCUREMENT POLICY OF MAY 29, 1941.
2. PART NO 28U5067-11 L&R MAY BE USED IN PLACE OF THIS DWG.

PURCHASE TO DWG.

Cont.# N00(s)414
Cont# 88477 LL
Cont# 77713 & on
Cont. # 51876 —

-6	PBY-6A	28U5071	2
-6	PBY-5B	28U5071	2
-6	PBY-6A	28U5071	2
-6	PBY-5	28U5071	2
ASSY. DASH No.	MODEL	NEXT ASSY.	REQ.

REQUIREMENTS PER AIRPLANE

REPLACES 28U5067-11½C — CALC. WT. 3.9 lb

REPLACED BY — ADV. WT.

UNLESS OTHERWISE SPECIFIED DIMENSIONS ARE SUBJECT TO ± 1/32 — SCALE 6" = 1'-0"

STAMP PART NUMBER WHERE SHOWN

PART No.	STOCK	MATERIAL	SPEC.	LH REQ.	RH REQ.	LH REQ.	RH REQ.	LH REQ.	RH REQ.	LH REQ.	RH REQ.	LH REQ.	RH REQ.
-6	3/16	ARMOR PLATE	02498										
PARTS LIST PER ASSY.				-0		-2		-3		-4		-5	

AC		BILLING		Esther Ballard				
NAVY ——	2-ZCP (P-27)	1-7-42			4-8-42	Wm. Mills		
HEAT TREAT	FINISH	DRAFT	CHECK	STRUCT	MAT	APPROV	DESG.	

NAME PLATE - SUMP ARMOR - SIDE REAR

OPP. HAND ——

CONSOLIDATED AIRCRAFT CORP. SAN DIEGO, CALIF.

DWG. SIZE D — 28U5093

LET	ALTERATION	DATE	BY
A	W.P.B. SYM. LIMITED PARTS PER ORD. NO. [illegible]		
	CHANGE MATL. SPEC. & PART TO C. R. SK. [illegible]		
	ONLY. NO MFG. CHG.	7-8-42	[illegible]

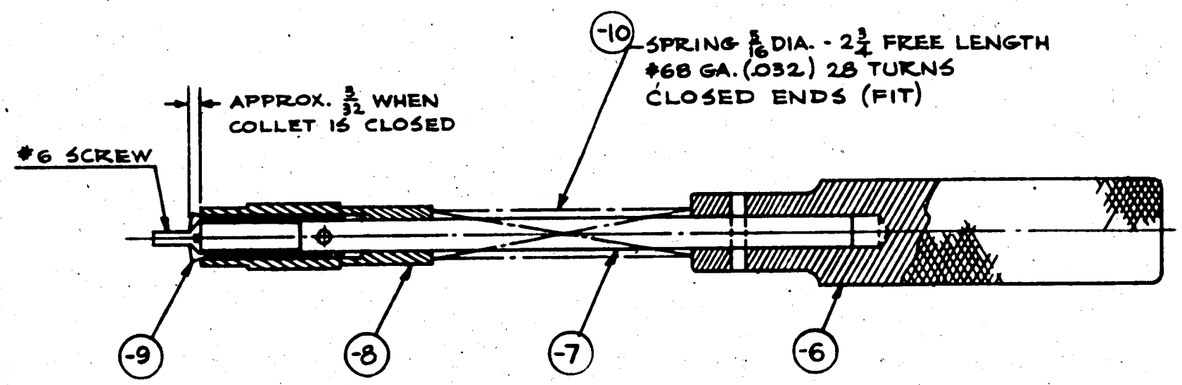

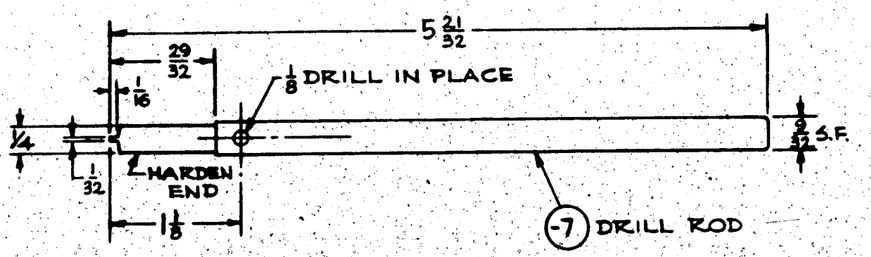

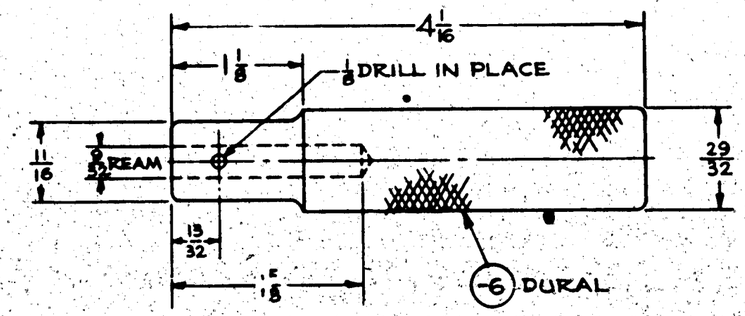

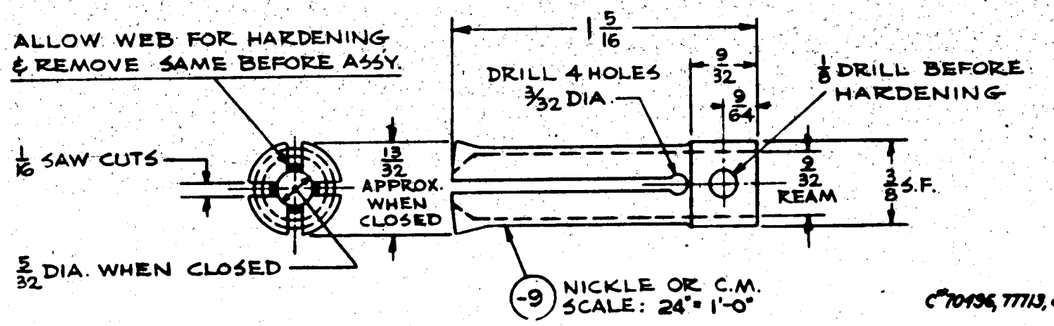

C° 70496, 77713, 88476 ONLY —

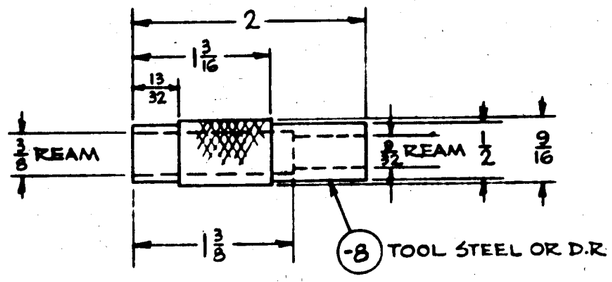

C° 70496 & 94876 "/345 —

PURCHASE TO DWG.

MAY BE PURCHASED FROM:
MONARCH TOOL CO.
STAMP ON HANDLE: "DE-ICER BOOTS"

ASSY. DASH NO.	MODEL	NEXT ASSY.	QTY.
	PBY-5A	28U1025	
	PBY-5B	28U1025	
	28-5AMN		
	28-5MN		
	28-5ANK		
	28-5MC		
	28-5MA		
	28-5ME		
	PBY-5	28U1025	

REQUIREMENTS PER AIRPLANE

REPLACES 1-J-1825 — .526 CALC. WT.

REPLACED BY — ASY. WT.

UNLESS OTHERWISE SPECIFIED DIMENSIONS TOLERANCES ± 1/64 — SCALE 12" = 1'-0" & NOTED

STAMP PART NUMBER WHERE SHOWN

PART No.	STOCK	MATERIAL	SPEC.	LH REQ.	RH REQ.	LH REQ.	RH REQ.	LH REQ.	RH REQ.	LH REQ.	RH REQ.	LH REQ.	RH REQ.
PARTS LIST PER ASSY.				-0		-2		-3		-4		-5	
-10	#68 GA. (.032) x 5/16 O.D.	SPRING		1									
-9	5/16 D. x 1 7/16	NICKLE OR CHROM. MOLY		1									
-8	1/2 O.D. x 2 1/8	TOOL STL. OR DRILL ROD		1									
-7	1/4 O.D. x 5 1/4	DRILL ROD		1									
-6	O.D. x 4 15/16	DURAL		1									

			DRAFT	CHECK	STRUCT	MAT	APPROV	ENG.
AC		TORGESEN						
NAVY		1-9-42					-31-42	
HEAT TREAT	FINISH							

NAME SCREW DRIVER & HOLDER FOR #6 SCREW

OPP. HAND

CONSOLIDATED AIRCRAFT CORP. SAN DIEGO, CALIF.

SIZE D — 28U5095

R 560582

LET	ALTERATION	DATE	BY
A	IN V/M ADD -6RE-7 FOR R.H. SIDE, -6L WAS -6	7-12-43	Cowan
	AN-99-5-125 HM AN88-5-125N		
B	ADDED 9° BEND TO -6, DIM $3\frac{23}{32}$ WAS $3\frac{1}{2}$, REMOVED WELD NOTE & SYMBOL FROM TOP VIEW & ADDED THEM TO FRONT VIEW, REMOVED NOTE THIS PART---3113B5. REMOVED $\frac{1}{2}$ R.		
	NO WT. CHG.	2-5-44	[illegible]

E.O.A62082A

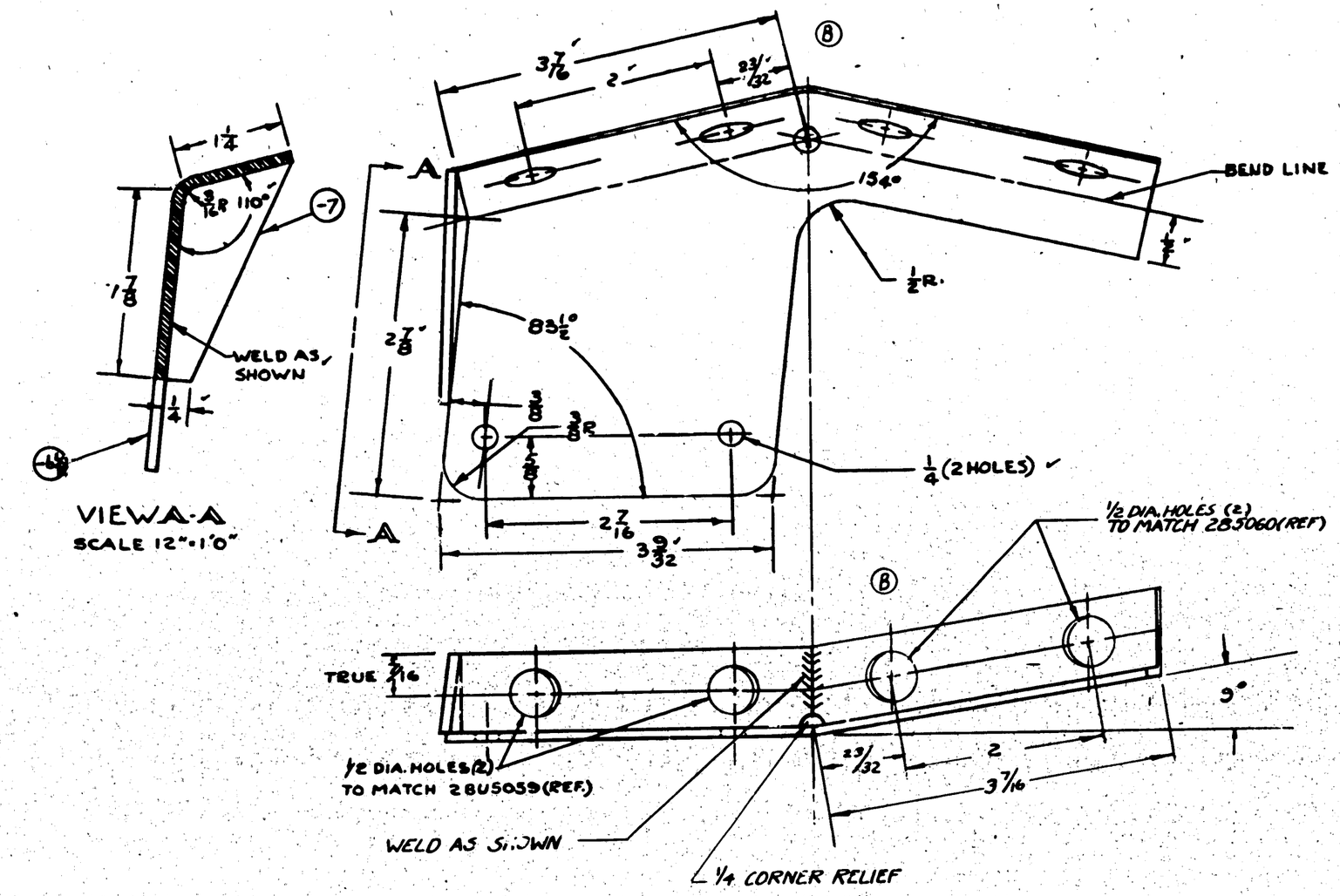

MCR 199-1
C.91876 "91" ON

-R	PBY-5A	28U5058	1																		
-L	PBY-5A	28U5058	1																		
-R	PBY-5	28U5058	1																		
-L	PBY-5	28U5058	1																		
ASSY. DASH NO.	MODEL	NEXT ASSY.	REQ.																		
REQUIREMENTS PER AIRPLANE																					
REPLACES		.61 GALS. WT.																			
REPLACED BY		ASY. WT.																			
SCALE																					
± .032 ± 1°	12"=1'0"																				
STAMP PART NUMBER WHERE SHOWN																					
				-6R	.093 x 5/8 x 7 1/16		CHR. MOLY STEEL	AN QQ-S-685		1											
				-7	.093 x 1 1/4 x 2 3/8		CHR. MOLY STEEL	AN QQ-S-685		1											
				-7	.093 x 1 1/4 x 2 3/8		CHR MOLY ST	AN QQ-S-685			1										
				-6L	.093 x 5/8 x 7 1/4		CHR MOLY ST	AN QQ-S-685			1										
				PART NO.	STOCK		MATERIAL		SPEC.	LH REQ.	RH REQ.	LH REQ.	RH REQ.	LH REQ.	RH REQ.	LH REQ.	RH REQ.	LH REQ.	RH REQ.	LH REQ.	RH REQ.
				PARTS LIST PER ASSY.						-0		-2		-3		-4		-5			

AC		WALLACE					
NORMALIZE NAVY NO. CONDITION	C	8-25-43					
HEAT TREAT	FINISH	DRAFT	CHECK	STRUCT	MAT	APPROV	ENG.

NAME SUPPORT-ARMAMENT SIDE WAIST GUN-LOWER

OPP. HAND 28U5100-R

CONSOLIDATED AIRCRAFT CORP. VF SAN DIEGO, CALIF.

SIZE D

28U5100

R

LET	ALTERATION	DATE	BY

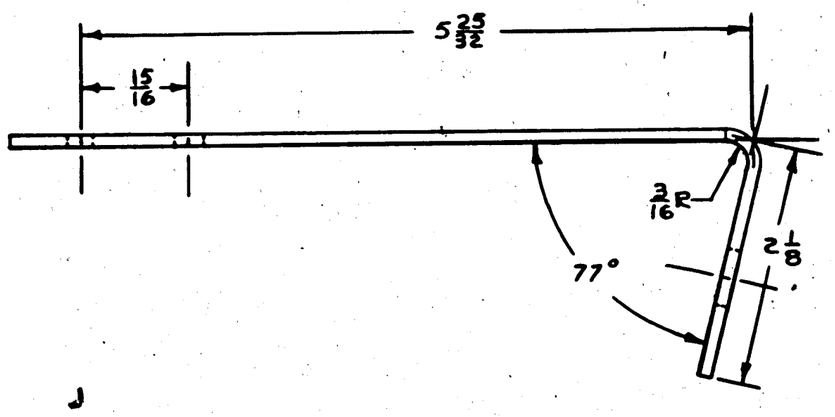

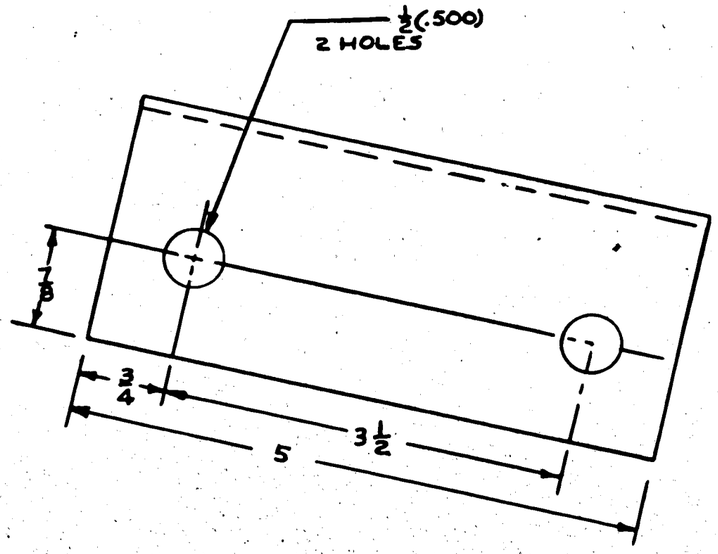

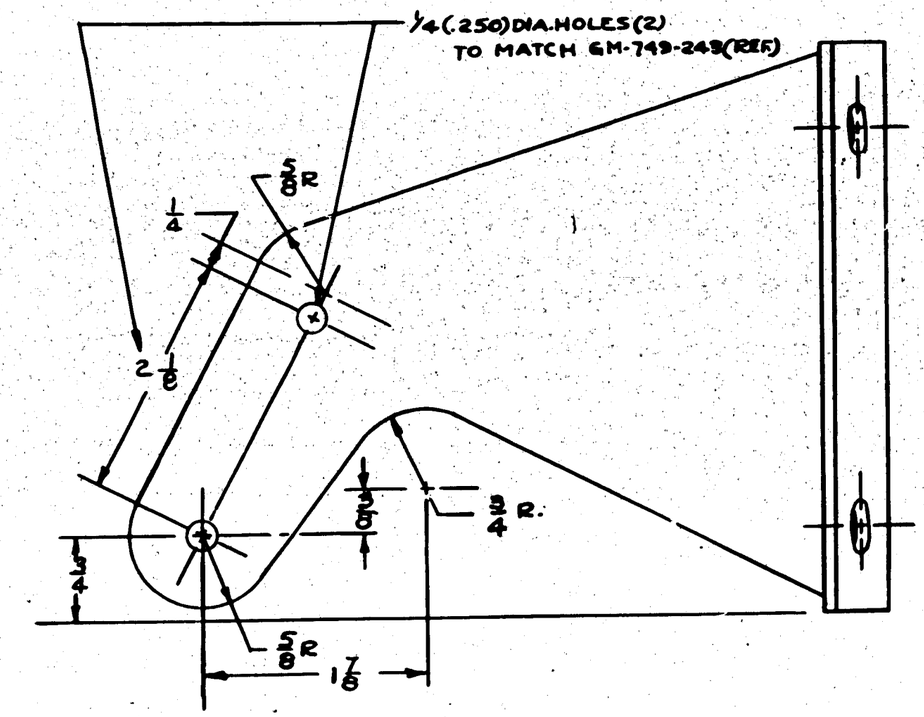

NOTE:
THIS PART IS INTERCHANGEABLE WITH N.A.F. #48126

C 91876 "91 ECN

ASSY. BASH No.	MODEL	NEXT ASSY.	QTY.
-R	PBY-5	28U5058-R	1
-L	PBY-5	28U5058-L	1

REQUIREMENTS PER AIRPLANE

REPLACES	
CALC. WT.	.86
REPLACED BY	
APP. WT.	
SCALE	12"=1'0"
± 1/32	

STAMP PART NUMBER WHERE SHOWN

PART No.	STOCK	MATERIAL	SPEC.	LH REQ.	RH REQ.	LH REQ.	RH REQ.	LH REQ.	RH REQ.	LH REQ.	RH REQ.	LH REQ.	RH REQ.
	.088 x 5¼ x 9	CHR MOLY ST	AMS 5526 B										
				-0		-2		-3		-4		-5	

PARTS LIST PER ASSY.

A C NAVY NORMALIZE 90 000 to 125 000		WALLACE	L.V.	Stevenson	Trautman	Brock			
HEAT TREAT	FINISH	8-25-42	DRAFT	CHECK	STRUCT	MAT	APPROV	9-3-42 ENG.	

NAME SUPPORT-ARMAMENT SIDE WAIST GUN ARMOR

CONSOLIDATED AIRCRAFT CORP. WF SAN DIEGO, CALIF.

OPP. HAND 28U5102-R

DWG. SIZE D 28U5102

R-9-4-42

LET	ALTERATION	DATE	BY

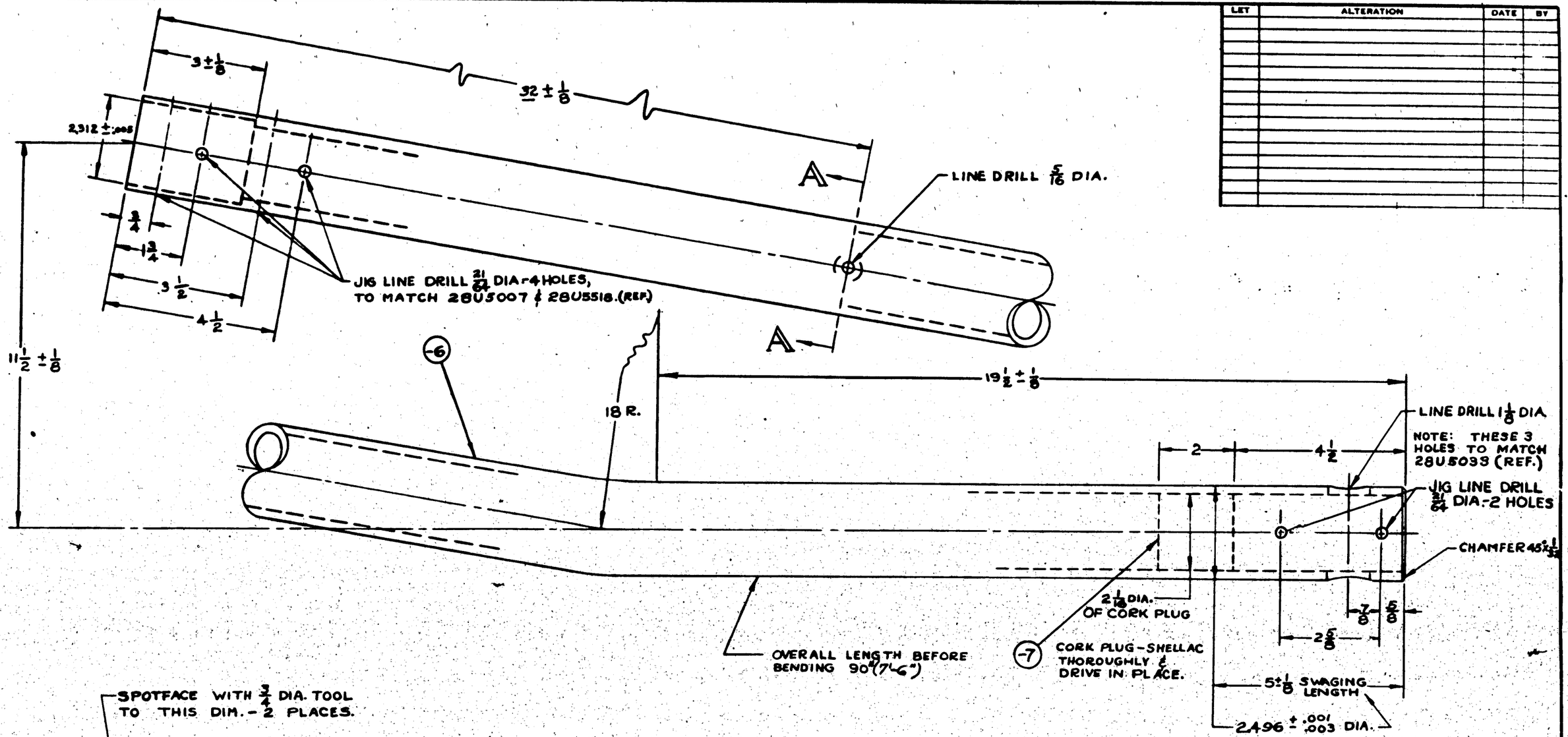

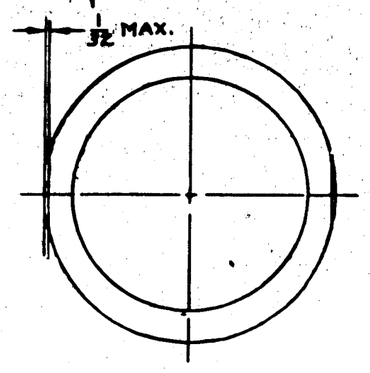

SECTION A-A
SCALE: 12" = 1'-0"

NOTES-

1. STENCIL IN RED LETTERS 1/2" HIGH (EXCEPT "CAUTION" IN 1" LETTERS): "CAUTION - DO NOT USE THIS BAR UNLESS SNUBBING CABLE IS ATTACHED TO KEEL."
2. 2P FINISH ON INSIDE OF -6.
3. T.S. 55,000 TO 70,000 P.S.I.

NO A(S) 464
M.C.R. 253 (1)

APPROVED FOR TOOLING BY
E. E. Dalton
3/24/43

ASSY. DASH NO.	MODEL	NEXT ASSY.	REQ'D
	PBY-5A	28U5006	1

REQUIREMENTS PER AIRPLANE

REPLACES — 45.2 Calc Wt.

REPLACED BY — Act. Wt.

LIGHT ON DRAWINGS UNLESS OTHERWISE DESIGNATED: ± 1/32 & NOTED

SCALE: 1"=1'-0" & NOTED

STAMP PART NUMBER WHERE SHOWN

PART NO	STOCK	MATERIAL	SPEC.	LH REQ. -0	RH REQ. -2	LH REQ. -3	RH REQ. -4	LH REQ. -5	RH REQ.
PARTS LIST PER ASSY.									
-7	2 1/16 DIA. x 2	CORK	COMM.	1					
-6	2 1/2 OD x .250 x 92	SEAMLESS TUBE	AN-WW-T-846	1					

AC
NAVY NOTED
HEAT TREAT

C-P & NOTED
FINISH

PLATE
2-18-43
DRAFT

CHECK	STRUCT	MAT	APPROV	ENG
	Ewert	Kinney		5-3-43

NAME: ROD - N.L.G. - TOWBAR

OPP. HAND

CONSOLIDATED AIRCRAFT CORP. SAN DIEGO, CALIF.

DWG SIZE: D

28U5517

R

DASH NO.	ACTUAL RING DIMENSIONS I.D.		O.D.		ENGINEERING DIMENSIONS GROOVE C'BORE DIA		GROOVE WIDTH X		GROOVE DEPTH Y		CHAMFER
	I.D.	TOL.	O.D.	TOL.	C'BORE DIA	TOL.	X	TOL.	Y	TOL.	
-6	.178	.002	.312	.003	.257	.002	.312	.002	.0851	.002	.125
-7	.239	.002	.372	.003	.290	.002	.375	.002	.0993	.002	.125
-8	.297	.002	.431	.003	.312	.002	.437	.002	.0695	.002	.125
-9	.362	.002	.497	.003	.312	.002	.500	.002	.1060	.002	.125
-10	.412	.002	.551	.003	.375	.002	.562	.002	.1063	.002	.188
-11	.475	.002	.617	.003	.437	.002	.625	.002	.1059	.002	.188
-12	.616	.002	.676	.003	.500	.002	.687	.002	.1051	.002	.188
-13	.548	.002	.744	.003	.562	.002	.750	.002	.1047	.002	.188
-14	.535	.002	.795	.003	.625	.002	.813	.002	.1049	.002	.188
-15	.553	.002	.863	.003	.625	.002	.875	.002	.1450	.002	.250
-16	.741	.002	.984	.003	.750	.002	.940	.002	.1445	.002	.250
-17	.801	.002	1.113	.003	.875	.002	1.065	.002	.1443	.002	.250
-18	.925	.002	1.222	.003	1.000	.002	1.240	.002	.1439	.002	.250
-19	.956	.002	1.352	.003	1.000	.002	1.315	.002	.2507	.002	.375
-20	1.112	.002	1.477	.003	1.125	.002	1.500	.002	.2107	.002	.375
-21	1.175	.002	1.591	.003	1.250	.002	1.625	.002	.2104	.002	.375
-22	1.610	.002	1.710	.003	1.375	.002	1.750	.002	.2102	.002	.375
-23	1.737	.002	1.825	.003	1.500	.002	1.875	.002	.2100	.002	.375
-24	1.864	.002	1.951	.003	1.625	.002	2.000	.002	.2098	.002	.375
-25	1.990	.002	2.076	.003	1.750	.002	2.125	.002	.2096	.002	.375
-26	2.100	.002	2.20	.003	1.750	.002	2.250	.002	.2884	.002	.500
-28	2.304	.002	2.445	.003	2.000	.002	2.500	.002	.2880	.002	.500

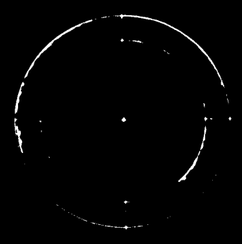

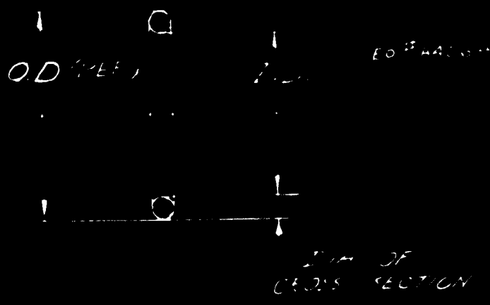

LTR	ALTERATION	DATE	APPD
A	CROSS SECT. ON GROOVE RECTANGLE CHANGED RAD. ADDED	11-29-41	
B	ADDED -22 TO DWG	1-27-42	
C	ADDED NOTE "SEE RELEASES" TO MFG. BLOCK NO WT. IN. & 32 HANGARS		

RING DETAILS - SEE TABULATION FOR DASH NOS & DIMENSIONS

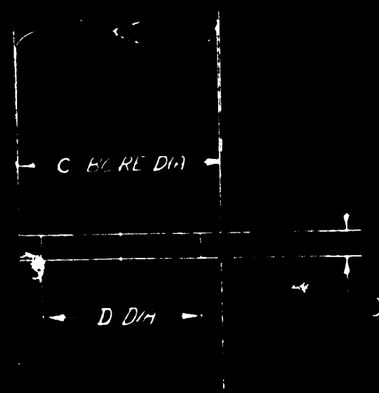

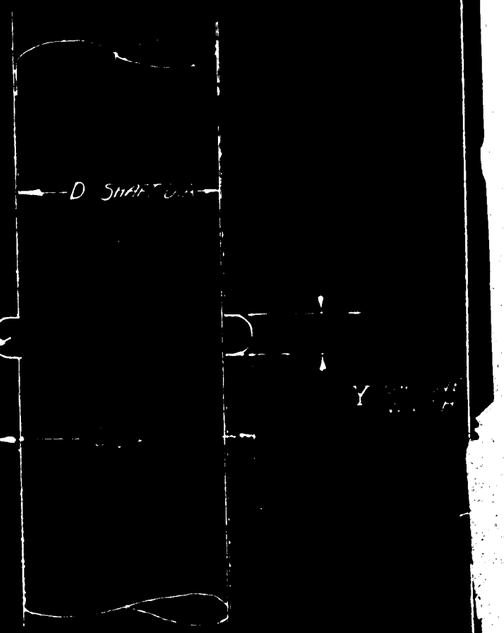

NOTE THIS GROOVE CAN BE SQUARE IF DESIRED IF GROOVE IS SQUARE USE "X" DIM. FOR WIDTH

SHAFT & HOUSING DETAILS ENGINEERING INFO. ONLY LIMITS & TOLERANCES ON 'C' & 'D' DIMENSIONS TO BE DETERMINED BY INDIVIDUAL INSTALLATIONS...

NOTES

1. MATERIAL - "HYCAR" SYNTHETIC RUBBER SHORE HARDNESS 60-70 OR "AMPERIPOL 1228" SHORE HARDNESS 60 - 70 (Both)
2. RINGS MUST BE SMOOTH & FREE OF SPRUES & INDENTATIONS. HULL "A65"
3. RINGS MAY BE PURCHASED FROM ... IRVHILL RUBBER CO. LOS ANGELES OR - MILLER RUBBER CO AKRON OHIO (Hull "A65" & ON)

SEE RELEASES			
-8	PBY-5	25F1208	1
-20	PBY-5A	25B1208	2
-18	PBY-5A	25B1208	2
-18	YB-32	33V-13	1
-18	[illegible]	33V-13	1

DASH NO.	MODEL	NEXT ASSY	REQ'D

REQUIREMENTS PER AIRPLANE

REPLACES — CALC WT

REPLACED BY — ACT WT

LIMITS UNLESS OTHERWISE SPECIFIED	SCALE
NOTED	NONE

STAMP PART NUMBER WHERE SHOWN

PART NO.	STOCK	MATERIAL
	NOTED	

PARTS LIST PER ASSY

PURCHASE TO DWG

A.C. NO.		
NAVY		NONE
HEAT TREAT		

NAME DOUGHNUT SEAL RINGS & GROOVE DIMENSIONS

CONSOLIDATED AIRCRAFT CORP

ID 33V219

SUPPLIES & EQUIPMENT CLASSIFICATION			
LET	ALTERATION	DATE	BY
D	TRACED	4-24-37	W.L.B.

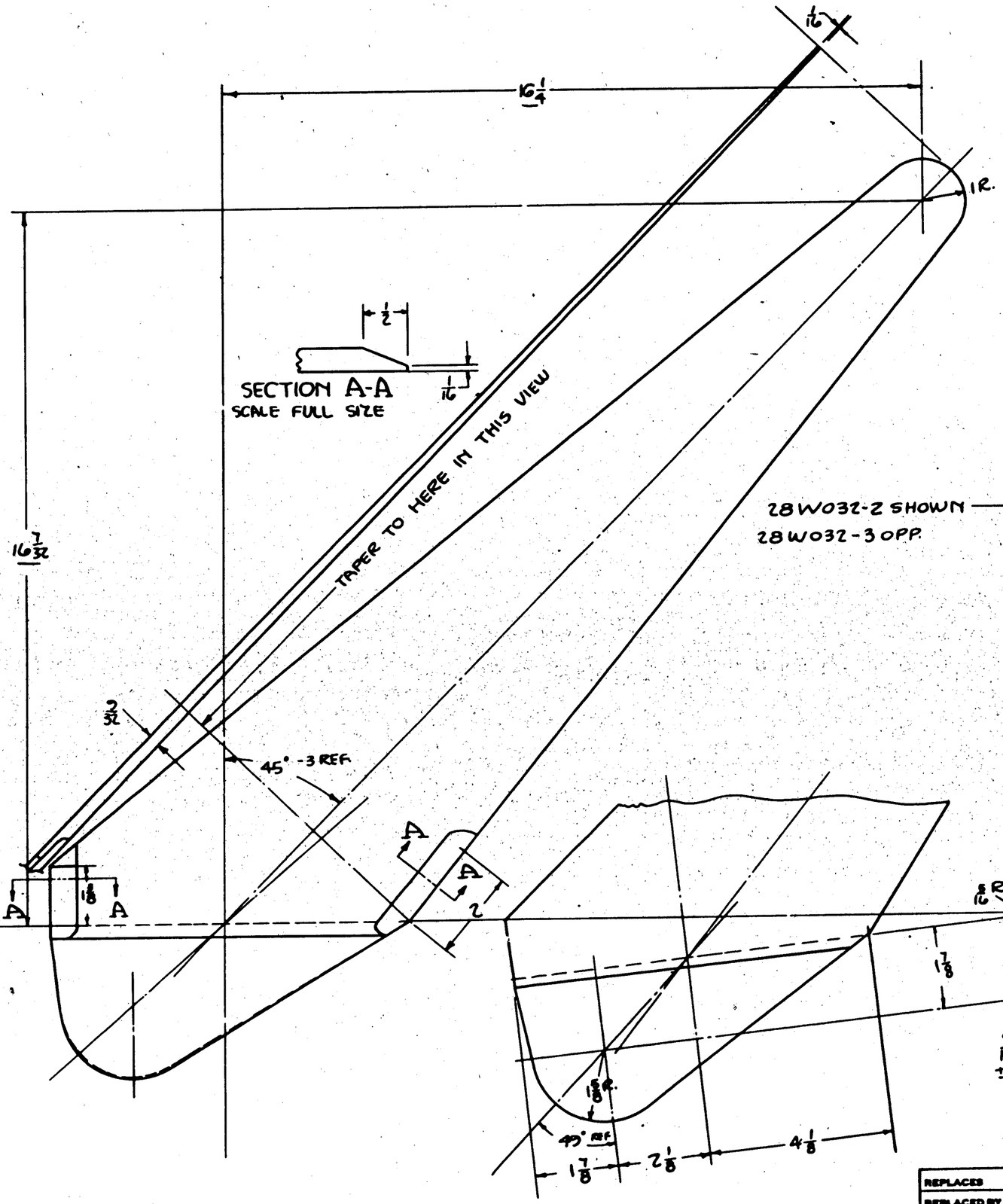

28W032-2 SHOWN
28W032-3 OPP.

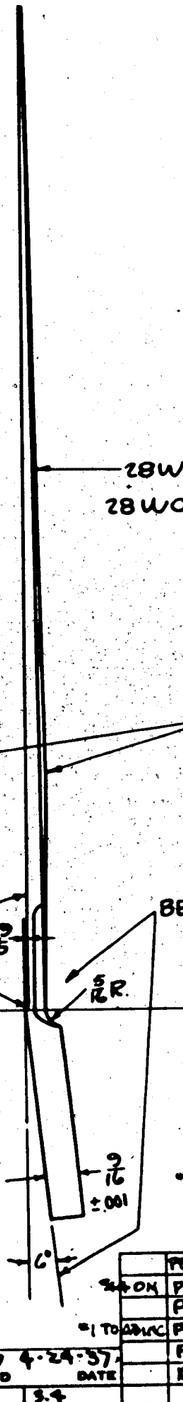

28W032-4 SHOWN
28W032-5 OPP.

THESE FITTINGS HAVE IDENTICAL CONTOURS IN FRONT VIEW

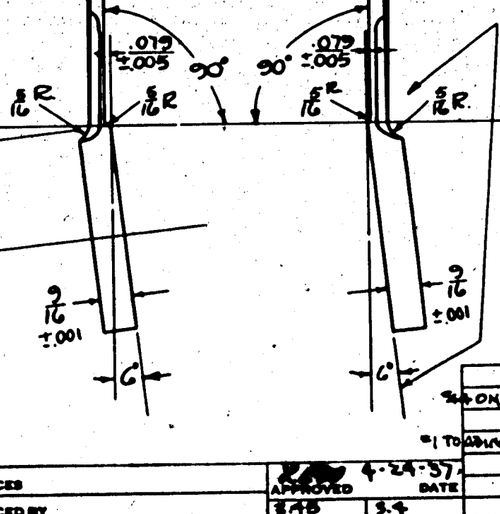

LIMIT ON DIMENSION ±.010 UNLESS OTHERWISE SPECIFIED

	PBY-4	28W027-10[illegible]-11									
SAME ON	PBY-2	28W027-10[illegible]-11									
	PBY-3	28W027-10[illegible]-13									
*1 TO ABOVE	PBY-2	28W027[illegible]-1						-5	1		
	PBY-1	28W027[illegible]-1						-4	1		
	IP3Y-1	28W027[illegible]-1						-3	1		
								-2	1		
O.H.	MODEL	NEXT ASSY.	USED	STD PARTS	LH REQ.	RH REQ.	PART NO.	LH REQ.	RH REQ.		

REPLACES	APPROVED [redacted] 4-24-37 DATE	REQUIREMENTS PER AIRPLANE	MAT.
REPLACED BY	$45 CALC. WT. / 3.4 ACT. WT.		PARTS LIST PER ASSY.
LIMIT ON DIMENSIONS UNLESS OTHERWISE SPECIFIED ±	SCALE 6" = 1FT.		
[redacted]	AC		
	NAVY N.U.P.L. ALLOY STAMP	ALCAD CLAD AL 24S0 / SR63 COND.T / [illegible]	
	MATERIAL	SPEC. / HEAT TREAT / FINISH	

		DRAFT	CHECK	ENGR.
		[illegible]		

CONSOLIDATED AIRCRAFT CORP. BUFFALO, N.Y.
STAMP PT. No. WHERE SHOWN

NAME
PLATE-WING OUTER STRUT ATTACHMENT FITTING

D 28W032

FINISH
Z-P-AU FOR PBY-1
Z-P-AL FOR PBY-2 & FUTURE

SUPPLIES & EQUIPMENT CLASSIFICATION			
LET	ALTERATION	DATE	BY
D	TRACED	9-22-37	CLARK

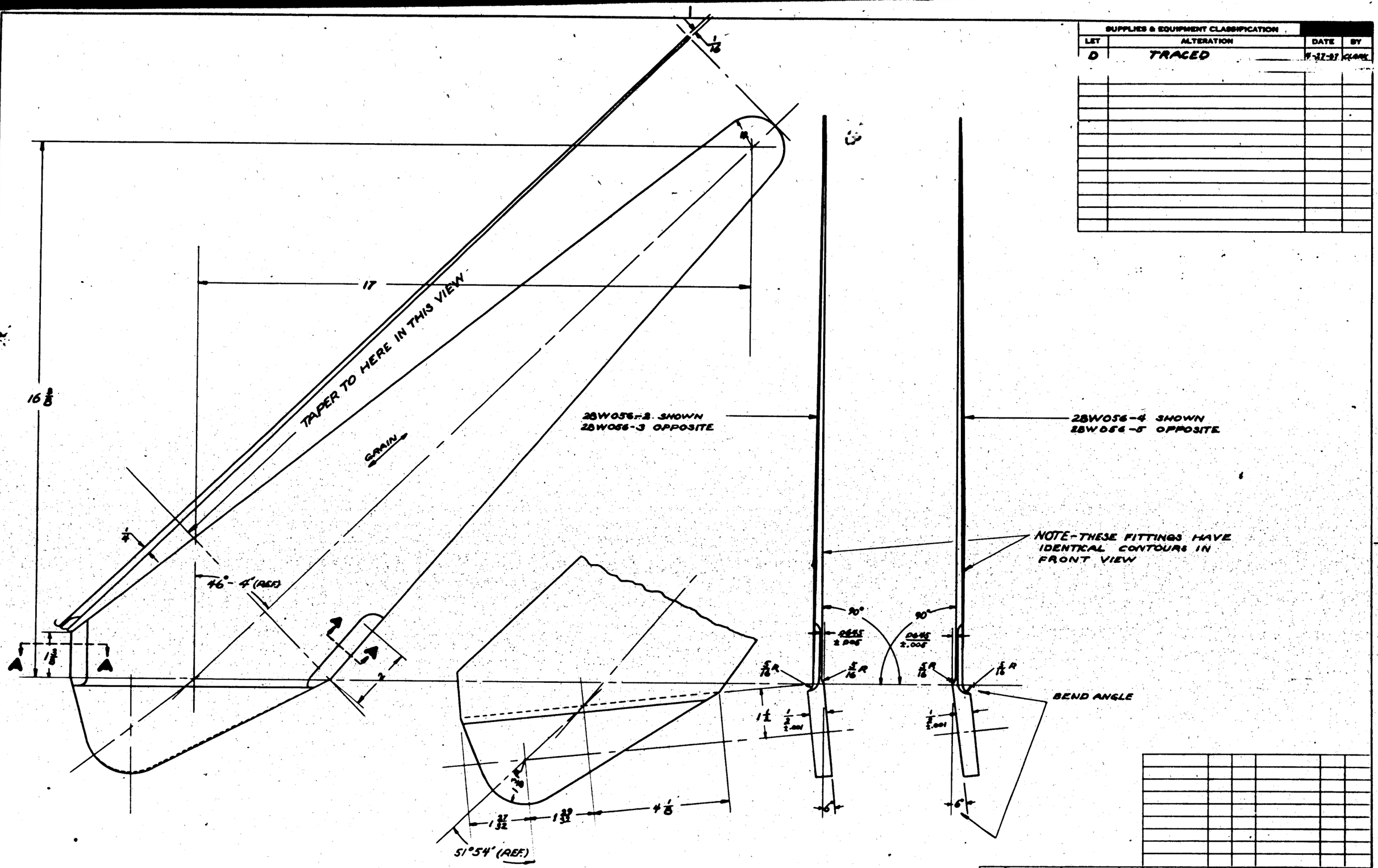

FINISH
Z-P-AKJ FOR PBY-1
Z-P-AL FOR PBY-2 & FUTURE

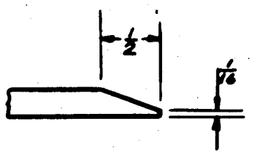

SECTION A-A
SCALE-FULL SIZE

	PBY-4											
	PBY-3	28W037-11										
Major	PBY-2	28W037-10										
Basic	PBY-1	-								-5	1	
	PBY-1	28W037-1								-4	1	
	XPBY-1	28W037								-3	1	
										28W056-2	1	
	O.N.	MODEL	NEXT ASSY.	REQ.	ST'D PARTS	LH REQ.	RH REQ.	PART NO.		LH REQ.	RH REQ.	

REPLACES	APPROVED	4-27-37 DATE	REQUIREMENTS PER AIRPLANE	MAT.
REPLACED BY	CALC.WT. 2.924	ACT.WT.		
LIMIT ON DIMENSIONS UNLESS OTHERWISE SPECIFIED ± .010	SCALE 6"=1'-0"		PARTS LIST PER ASSY.	
	AC			
	NAVY AL. ALLOY BAR (Alclad)	SAE 53 CONST.	NOTED	DRAFT 9-9-37 Shirley MILLER
	MATERIAL	SPEC.	HEAT TREAT / FINISH	CHECK 9-17-37
CONSOLIDATED AIRCRAFT CORP. BUFFALO, N.Y.	STAMP PT. No. WHERE SHOWN			EXAM. ENG.

NAME PLATE
WING OUTER REAR STRUT ATTACHMENT FITTING

OPP. HAND

DWG. D SIZE 28W056

BUFFALO BLUEPRINT CO., INC. BUFFALO
IMPERIAL TRACING CLOTH

LET	SUPPLIES & EQUIPMENT	DATE	BY
F	TRACED UP TO DATE	4-23-38	V I B
G	CHANGED SH'T. STOCK FROM AL ALLOY (SPEC 47A8) TO ALCLAD (SPEC 47A8)	11-18-39	THURBER
H	ADDED "Z" FINISH	11-14-39	Cathcart
J	ADDED RIVET PATT FOR -6 & -7	11-18-40	CARLBERG
K	CREATE ASS'Y -2 FOR -6 & -7 WITHOUT COVER PLATE -5 & SLOT	11-18-40	CARLBERG
L	REPLACED -1 ASSY. WITH -55 ASSY	4/19/41	BdTz
M	ON DRAWING + IN B/M; IN B/M REMOVED -5 FROM -55 ASS'Y	6-2-41	"WAH"
N	ADDED 28W200-5 TO B/M NO. WT. CHG	5-26-41	Jeanfort

E.O 23120
E.O. 21455
E.O A378
28-5ME, PBY-5

SPACER
28W200 - 4 L.H.
28W200 - 5 R.H.

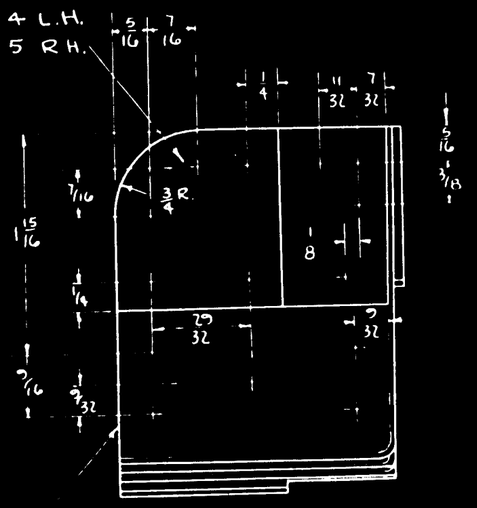

(-2) L.H. (-3) R.H.
.128 ALCLAD SH'T. (G)
SPEC 47A8 COND A
ALLOY 2450
H T SR53 AFTER FORMING
FINISH "Z"

(K) --0 ASSEM

NOTE:-
CORNER PIECE IS NOT JOGGLED. SEPARATE SPACERS SHOWN IN INSTALLED POSITION.

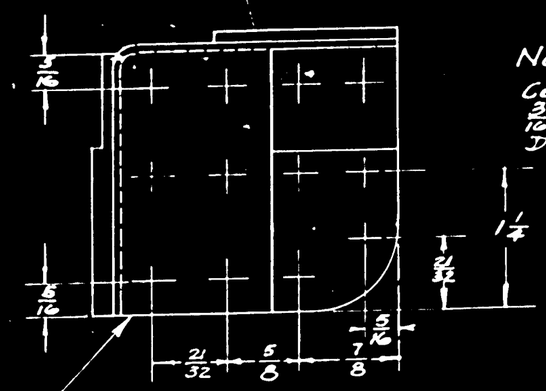

NOTE:
CORNER RADII 1/8. ALL HOLES 3/16 ON ASSEMBLY. PRICK PUNCH DETAIL.

(J) RIVET PATTERN TO BE USED ON UNSLOTTED CORNERS ONLY.

(K) (-6) .128 ALCLAD SHT SPEC 47A8 COND A ALLOY 2450 HT · SR-53 AFTER FORMING FINISH Z (-7) — -55ASSEM

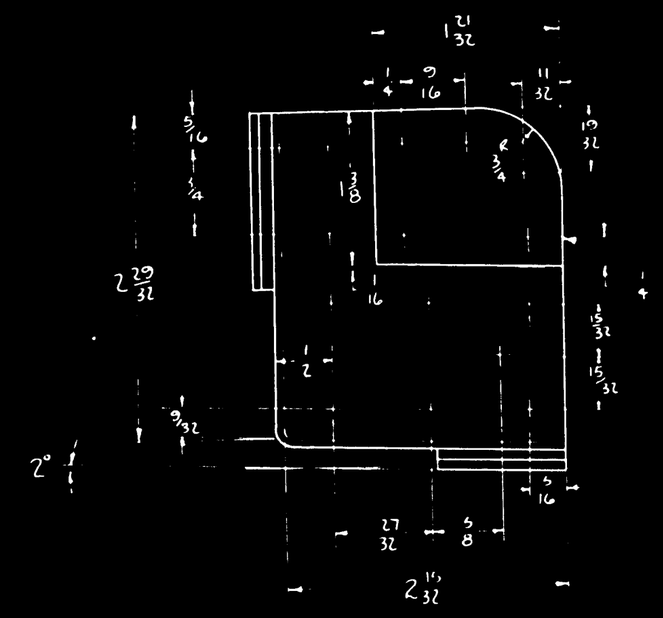

& SLOT IN -2, 3

(-5) GUSSET
.091 ALCLAD SH (G)
SPEC 47A8 COND T
ALLOY 24ST
FINISH "Z"

(-4) (G)
SPACER
.091 ALCLAD SH'T 24T
SPEC. 47A8 COND T.
FINISH - "Z"

SPACER
28W200 - 2 L.H.
28W200 - 3 R.H.

-55	28-5MC	28W5555	1 EA
-55	28-5MN	28W5555	1 EA
-55	28-5MC	28W5555	1 EA
-55	28-5AMN	28W5556	1 EA
-55	PBY-58	28W4155	1 EA
-55 R	PBY-5A	28W5005	1 EA
4 & ON -55	28-5ME	28W4155	1 EA
1-3 -55 L	28-5ME	28W4155	1 EA
-55 L	28-5MA	28W4155	1 EA
-55	PBY-5	28W5005	1 EA
36 & ON -55	PBY-5	28W4005	1 EA
15-35 -55 R	PBY-5	28W4005	1 EA
1-14	PBY-4	28W4005	
-R	PBY-4	28W4005	
-R	PBY-3	28W3005	
	PBY-3	28W3005	
-R	PBY-2	28W2005	
	PBY-2	28W2005	
-P	PBY-1	28W005	
	PBY-1	28W005	

FINISH COD

Z	ANODIC TREATMENT
P	P 27 PRIMER
AP	ALUMINIZED PRIMER CADMIUM PLATE

	LH REQ.	RH REQ.	PART NO.
(N)			28W200-5
			-4
			-3
			28W200-2
			-7
			-6
(M)			28W059-4
			-55 ASSEM
			28W059-2
			28W200-5
			-4
			-3
			28W200-2
			-5
			-4
			28W059-3
			-0 ASSEM

O.H.	MODEL	NEXT ASSY	REQ.	ST'D PARTS	MAT.
REQUIREMENTS PER AIRPLANE					
NAVY NOTED		NOTED	NOTED	Z-P	
MATERIAL		SPEC.	HEAT TREAT	FINISH	

PARTS LIST PER ASSY.
10-3-35 Shirley MILLER
T.P.F. 5-1237
DRAFT | CHECK | TEAM | JIG

OPP HAND 28W059-R

REPLACES 28W059 OF 1-18-35	APPROVED	9-23-37 DATE
REPLACED BY	.38 CALC WT.	ACT WT
LIMIT ON DIMENSIONS UNLESS OTHERWISE SPECIFIED ± .015	SCALE 12" = 1'-0"	
	AC	

CONSOLIDATED AIRCRAFT CORP. BUFFALO, N.Y.
STAMP PT. No. WHERE SHOWN

NAME
FITTING-WING-GAS TIGHT CORNER-LOWER FRONT ST. 5

CWG SIZE D | 28W059

SUPPLIES & EQUIPMENT CLASSIFICATION

LET	ALTERATION	DATE	BY
E	TRACED UP TO DATE	4-23-37	V I B
F	CHANGED SHT. STOCK FROM AL. ALLOY TO ALCLAD	11-17-39	[illegible]
G	ADDED Z-P FINISH	11-19-39	[illegible]
E.O. 21455 H	CREATE ASSY -2 FOR -6 & -7 WITH OUT COVER PL. -5 & SLOT	11-1-40	ELVEN
E.O. 23118 J	ADDED RIVET PATTERN FOR -6 & -7	11-1-40	ELVEN
K	CHANGED -2 ASSY TO -55. REMOVED -5 FROM -55 ASSY	6-2-41	WAIT DAVIS

SPACER -4
MAT'L 091 ALCLAD SHT.
SPEC 47A8 - COND T
ALLOY 24T
FINISH - Z

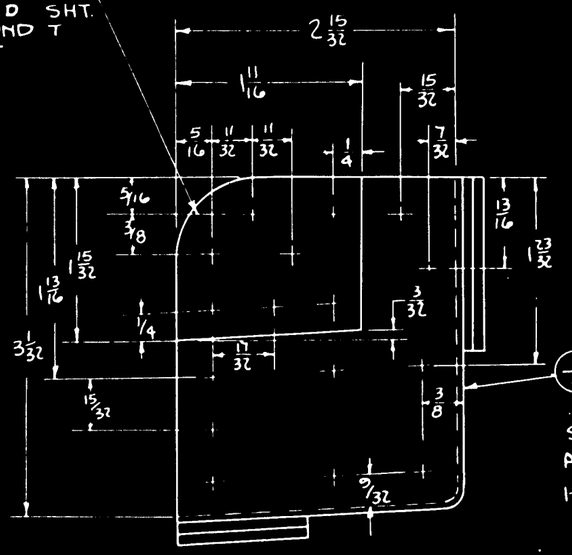

SPACER
28W200 - 4 L H.
28W200 - 5 R H.

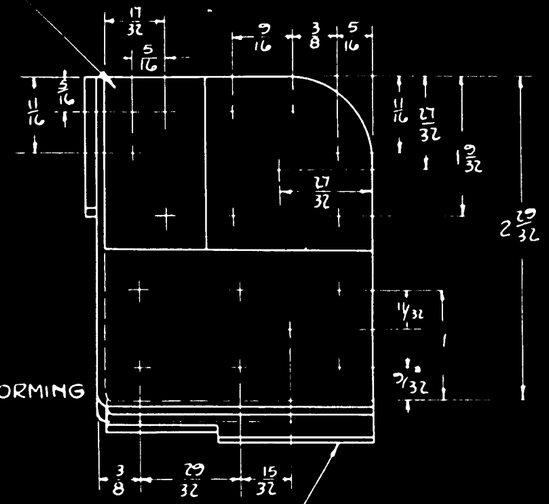

-2 L H -3 R H.
.128 ALCLAD SH.
SPEC. 47A8 COND A
ALLOY 24-S0
HT SR53 AFTER FORMING

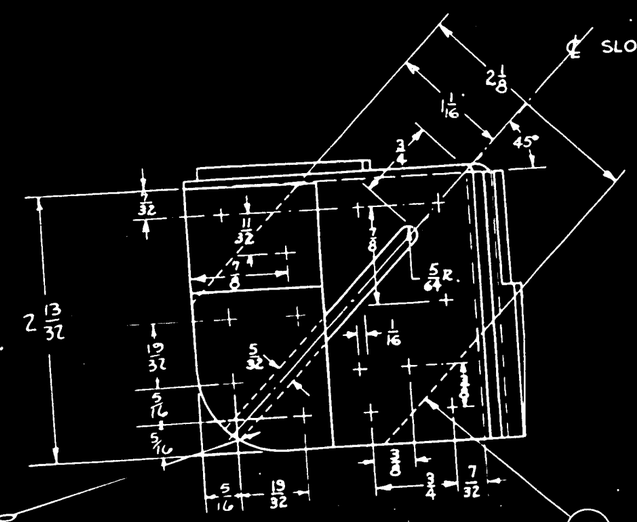

SLOT IN -2,-3

NOTE
CORNER PIECE IS NOT JOGGLED. SEPARATE SPACERS SHOWN IN INSTALLED POSITION.

SPACER
28W200 - 2 L H.
28W200 - 3 RH.

-5 .091 ALCLAD SHT.
SPEC. 47A8 COND T.
ALLOY 24-ST
FINISH "Z"

-0 ASSEM.

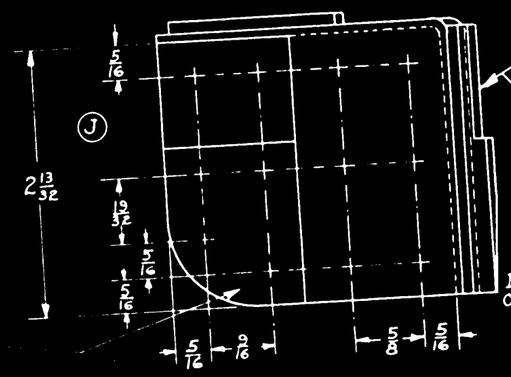

-6 128 ALCLAD SHT.
-7 SPEC. 47A8 COND A
HT. SR-53 AFTER FORMING
FINISH "Z"

-55 ASSEM.

DETAIL SHOWING RIVET PATTERN ON UNSLOTTED GAS TIGHT CORNERS

SPACER -
28W200 -2 L.H.
28W200 -3 R.H.

NOTE:-
CORNER RADII 1/8
ALL HOLES 3/16 ON ASSEMBLY.
PRICK PUNCH DETAIL.

										-5	1
										-4	1
										-3	1
										28W200-2	1
SHIP #4 & ON	-55	2B-5-ME	28W4005-550							-7	1
	-55	2B-5-ME	28W4005-550							-6	1
SHIP #15 & ON	-55	PBY-5	28W4005-550							-	
	-55	PBY-5	28W4005-550							28W070-4	1 1
	-R	PBY-5	28W4005-550							-55 ASSEM.	
		PBY-5	28W4005-550							28W200-5	1
	-R	PBY-4	28W4005							-4	1
		PBY-4	28W4005							-3	1
	-R	PBY-3	28W4005							28W200-2	1
		PBY-3	28W4005							5	1 1
	-R	PBY-2	28W4005							4	1 1
		PBY-2	28W4005							3	1
	-R	PBY-1	28W005							28W070-2	1
		PBY-1	28W005							-0 ASSEM.	

O.H.	MODEL	NEXT ASSY.	REQ.	ST'D PARTS	LH REQ.	RH REQ.	PART NO.	LH REQ.	RH REQ.
REQUIREMENTS PER AIRPLANE				MAT.	PARTS LIST PER ASSY.				

REPLACES 28W070 OF 1-21-35
REPLACED BY
LIMIT ON DIMENSIONS UNLESS OTHERWISE SPECIFIED ± .015
APPROVED [signature] 4-23-37 DATE
CALC WT. 48 ACT WT.
SCALE 12" = 1'-0"
AC
NAVY NOTED | NOTED | NOTED | Z-P
MATERIAL | SPEC. | HEAT TREAT | FINISH
11-14-35 Shirley MILLER
T.P.F. 51437
DRAFT | CHECK | EXAM | ENG

CONSOLIDATED AIRCRAFT CORP. BUFFALO, N.Y.
STAMP PT. NO. WHERE SHOWN

NAME FITTING-WING-GAS TIGHT CORNER - LOWER REAR - STA 5

OPP. HAND 28W070-R

DWG. SIZE D 28W070

SULLIVAN MCKEEGAN CO. INC. BUFFALO
IMPERIAL TRACING CLOTH

SUPPLIES & EQUIPMENT CLASSIFICATION			
LET	ALTERATION	DATE	BY
A	TRACED	4-30-37	SWAS

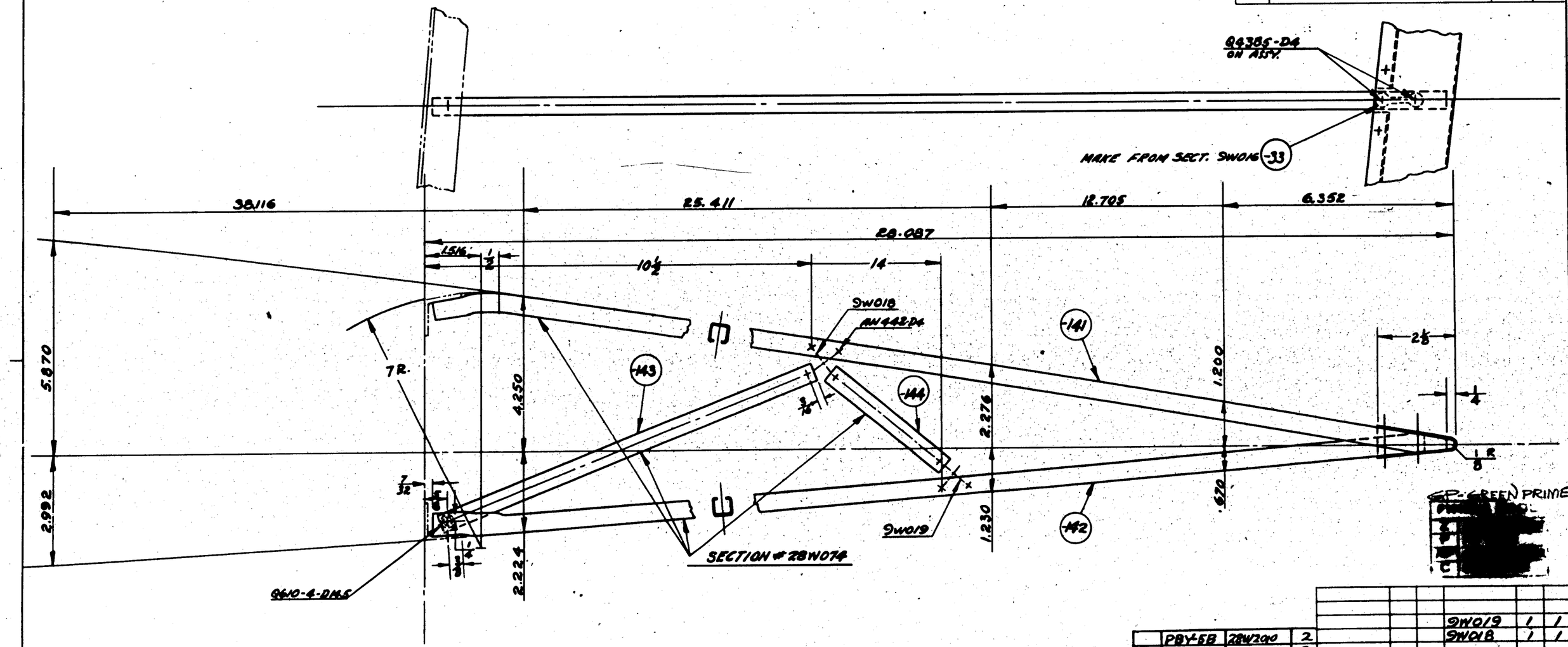

FINISH — Z-P-[redacted] GP FOR PBY-1
Z-P-[redacted] FOR PBY-2
Z-P-AP FOR PBY-3 & FUTURE

											9W019	1	1
											9W018	1	1
	PBY-5B	28W2010	2										
	PBY-5A	28W2010	2										
	PBY-4	28W2010-1									Q4305D4	2	2
	PBY-4	28W2010											
	PBY-3	28W2010-1									Q610-4-DM5	1	1
	PBY-3	28W2010											
	PBY-2	28W2010-1											
	PBY-2	28W2010									-144	1	1
	PBY-1	28W2010-1									-143	1	1
	PBY-1	28W2010									-142	1	1
	XPBY-1	28W2010-1									-141	1	1
	XPBY-1	28W2010		AN442D4	8	8	28W071-33	1	1
				O.H.	MODEL	NEXT ASSY.	REQ.	ST'D PARTS	LH REQ.	RH REQ.	PART NO.	LH REQ.	RH REQ.

REPLACES	APPROV[redacted] 4-30-37 DATE					
REPLACED BY	CALC.WT.	ACT.WT.	REQUIREMENTS PER AIRPLANE	MAT.	PARTS LIST PER ASSY.	
LIMIT ON DIMENSIONS UNLESS OTHERWISE SPECIFIED ± .010	SCALE 6" : 1'0"					
[redacted]	AC				5-19-37	H.M.P.
	NAVY NOTED	NOTED	NOTED	NOTED	5-19-37	
	MATERIAL	SPEC.	HEAT TREAT	FINISH	DRAFT	CHECK	EXAM.	ENG.
	CONSOLIDATED AIRCRAFT CORP. BUFFALO, N. Y.	NAME RIB # 2 WING - AILERON				OPP. HAND
	STAMP PT. No. WHERE SHOWN				SIZE D	28W071-199

SULLIVAN-DONOHOE CO., INC. BUFFALO

SUPPLIES & EQUIPMENT CLASSIFICATION			
LET	ALTERATION	DATE	BY
A	TRACED	5-4-37	SWMG

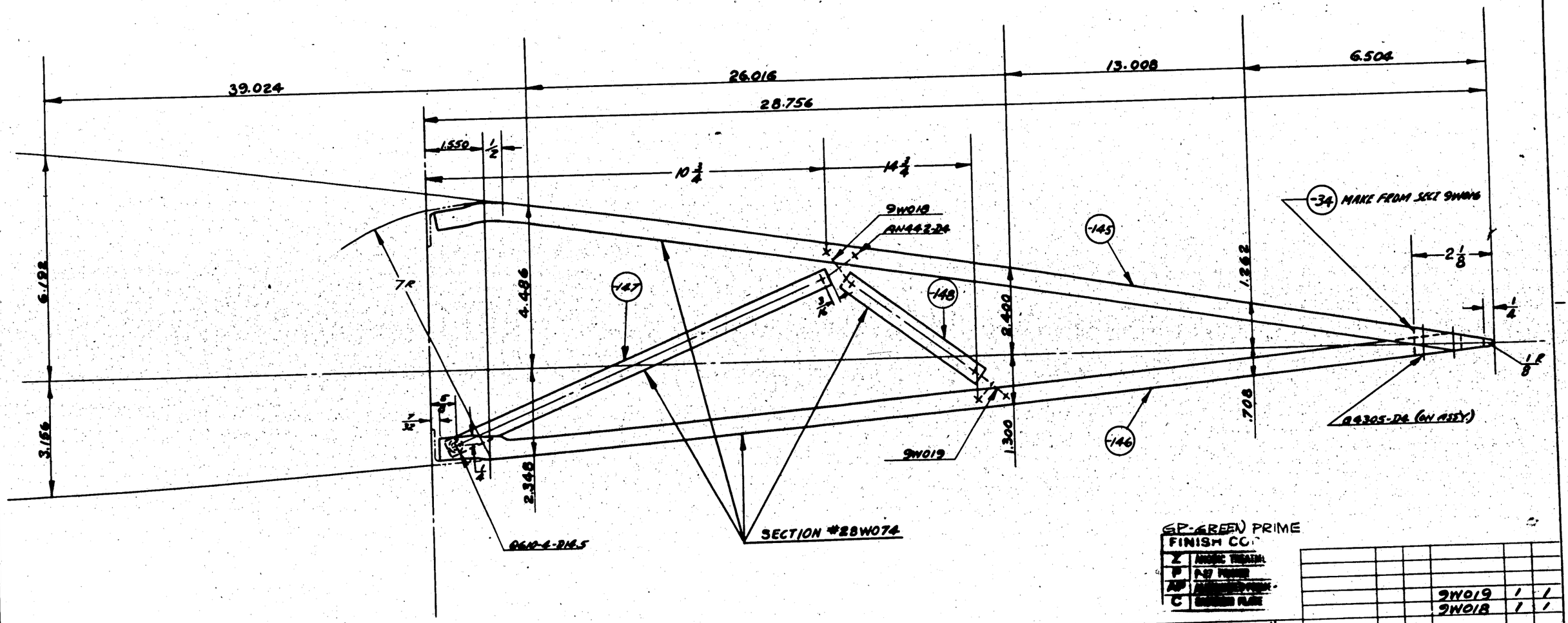

GP-GREEN PRIME

FINISH CO

Z	[redacted]
P	[redacted]
AP	[redacted]
C	[redacted]

FINISH - PBY-1 - Z-P-[redacted]-GP
PBY-2 - Z-P-[redacted]-GP
PBY-3 & FUTURE - Z-P-ZAP

	PBY-5A	28W2010	2																
	PBY-5B	28W2010	2																
	PBY-4	28W2010-1														9W019	1	1
	PBY-4	28W2010														9W018	1	1
	PBY-3	28W2010-1																	
	PBY-3	28W2010														Q4305-D4	2	2
	PBY-2	28W2010-1														Q610-4-D4.5	1	1
	PBY-2	28W2010																	
	PBY-1	28W010-1														-145	1	1
	PBY-1	28W010														-147	1	1
	XPBY-1	28W010-1														-148	1	1
	XPBY-1	28W010														-146	1	1
										AN442-24	8	8				28W071-34	1	1
								O.H.	MODEL	NEXT ASSY.	REQ.	ST'D PARTS	LH REQ.	RH REQ.	PART NO.		LH REQ.	RH REQ.

REQUIREMENTS PER AIRPLANE — MAT. — PARTS LIST PER ASSY.

					5-10-37	[redacted]	AMP
					DRAWN 5-4-37		4
NOTED	NOTED	NOTED			DRAFT	CHECK	EXAM.	ENG.
SPEC.	HEAT TREAT	FINISH						

REPLACES

REPLACED BY

LIMIT ON DIMENSIONS UNLESS OTHERWISE SPECIFIED ±.010

[redacted]

APPROVED [redacted] DATE

CALC.WT. ACT.WT.

SCALE 6"/0"

AC

NAVY NOTED

MATERIAL

CONSOLIDATED AIRCRAFT CORP. BUFFALO, N. Y.

STAMP PT. No. WHERE SHOWN

NAME

RIB #3 - WING-AILERON

OPP. HAND: —

SIZE D

28W071-202

SUPPLIES & EQUIPMENT CLASSIFICATION			
LET	ALTERATION	DATE	BY
A	TRACED	8-1-37	SMEL

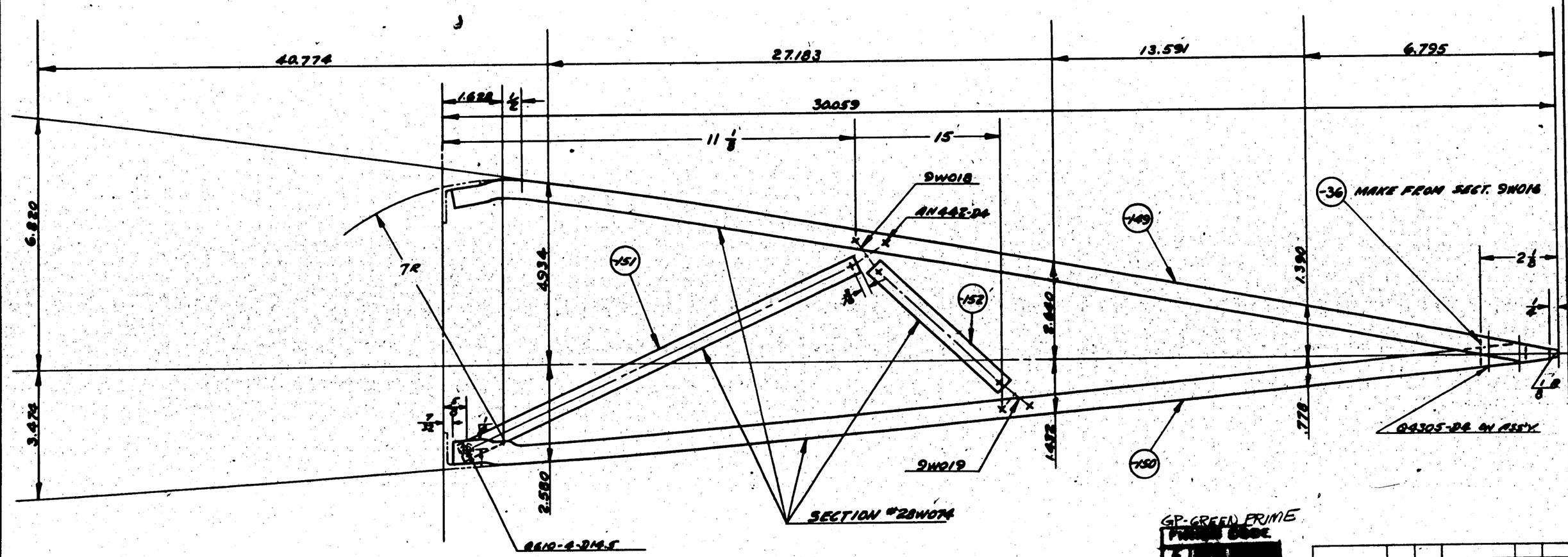

GP-GREEN PRIME

FINISH -Z-P- [redacted] FOR PBV-1
-Z-P- [redacted] FOR PBV-2
-Z-P- AP FOR PBV-3 & UP

GP

									9W019	1	1
									9W018	1	1
PBV-5A	28W2010	2									
PBV-4	28W1010-1								AS305-D4	2	2
PBV-4	28W1010								AS10-4-D14.5	1	1
PBV-3	28W2010-1										
PBV-3	28W2010										
PBV-2	28W2010-1										
PBV-2	28W2010								-152	1	1
PBV-1	28W010-1								-151	1	1
PBV-1	28W010								-150	1	1
XPBV-1	28W1010-1								-149	1	1
XPBV-1	28W010		AN442-D4	8	8	28W071-36	1	1
O.H.	MODEL	NEXT ASSY.	REQ.	STD PARTS	REQ. LH	REQ. RH	PART NO.	REQ. LH	REQ. RH

REPLACES	APP. [redacted] DATE 8-1-37	REQUIREMENTS PER AIRPLANE	MAT. / PARTS LIST PER ASSY.
REPLACED BY			8-10-37 [redacted] H.M.P.
LIMIT ON DIMENSIONS UNLESS OTHERWISE SPECIFIED ± .010	CALC. WT. ACT. WT.		DRAWN 8-11-37
[redacted]	SCALE 6"=1'0"		
	AC		
	NAVY NOTED	NOTED / NOTED / NOTED	DRAFT / CHECK / EXAM. / ENG.
	MATERIAL	SPEC. / HEAT TREAT / FINISH	

CONSOLIDATED AIRCRAFT CORP. BUFFALO, N. Y.

STAMP PT. No. WHERE SHOWN

NAME RIB #5 WING-AILERON

OPP. HAND —

SIZE D

28W071-205

E.O. 34601

SUPPLIES & EQUIPMENT CLASSIFICATION			
LET	ALTERATION	DATE	BY
A	TRACED	8-27-41	STAFF
B	CHANGED DWG. TO 30,685 (LOFTS 5788)	9-17-41	[illegible]

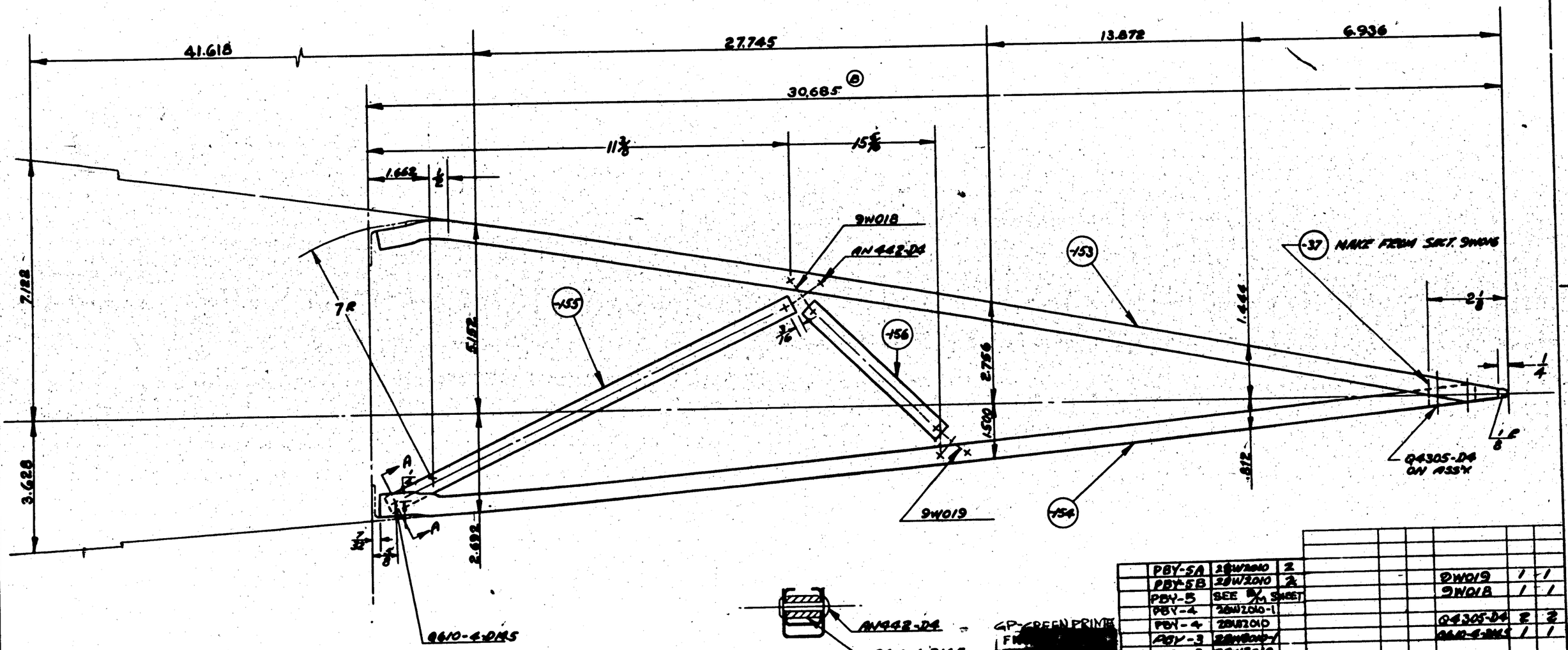

SECTION A-A
SCALE - FULL SIZE

GP-GREEN PRIME
FP
Z
P
AP
C

	PBY-5A	28W2010	2											DW019	1	1
	PBY-5B	28W2010	2											9W018	1	1
	PBY-5	SEE [illegible] SHEET														
	PBY-4	28W2010-1												Q4305-D4	2	2
	PBY-4	28W2010												9610-4-D145	1	1
	PBY-3	28W2010-1														
	PBY-3	28W2010														
	PBY-2	28W2010-1														
	PBY-2	28W2010												-156	1	1
	PBY-1	28W1010-1												-155	1	1
	PBY-1	28W1010												-154	1	1
	XPBY-1	28W1010-1												-153	1	1
	XPBY-1	28W1010												AN442-D4	8	8

O.N.	MODEL	NEXT ASSY.	REQ.	STD PARTS	LH REQ.	RH REQ.	PART NO.	LH REQ.	RH REQ.
							28W071-37	1	1

REQUIREMENTS PER AIRPLANE | MAT. [illegible] | PARTS LIST PER ASSY.

NAVY NOTED	NOTED	NOTED	NOTED
MATERIAL	SPEC.	HEAT TREAT	FINISH

5-30-41	[illegible]	WMR		
DRAWN 8-14-41				4
DRAFT	CHECK	ENGR.	ENG.	

REPLACES
REPLACED BY
LIMIT ON DIMENSIONS UNLESS OTHERWISE SPECIFIED ± .010

APPROVED [illegible] 5-3-37 DATE
CALC. WT. | ACT. WT.
SCALE 6"=1'0"
AC
MATERIAL

CONSOLIDATED AIRCRAFT CORP. BUFFALO, N. Y.
STAMP PT. No. WHERE SHOWN

NAME RIB #6 WING - AILERON

OPP. HAND
SIZE D
28W071-2[illegible]

FINISH
PBY-1 — Z-P-[illegible] GP
PBY-2 — Z-P-[illegible] GP
PBY-3 & FUTURE — Z-P-AP

MAKE -153, -154, -155, -156 FROM 28W074

SUPPLIES & EQUIPMENT CLASSIFICATION			
LET	ALTERATION	DATE	BY
A	TRACED	5-9-37	[illegible]

46.100 30.734 15.367 7.683

34.005

12 1/2 17

1.843 1/2

8.716 6.302 3.378 1.740

4.442 3.392 1.846 1.007

9W018 AN442-D4

7R

167 168 165 166

5/16

2 1/8

42 MAKE FROM SECT. 9W016.

Q4305-D4 ON ASSY.

Q4/0-4-D145

SECTION @ 28W016

9W019

GP-GREEN PRIME

FINISH [redacted]

FINISH: Z-D-[redacted] FOR PBV-1
Z-D-[redacted] FOR PBV-2
Z-PAP FOR PBV-3 & FUTURE

GP

	PBV-4	28W2010-1												9W019	1	1	
	PBV-4	28W2010												9W018	1	1	
	PBV-3	28W2W01															
	PBV-3	28W2010												Q4305-D4	2	2	
	PBV-2	28W2W01												Q4/0-4-D145	1	1	
	PBV-2	28W2010															
	PBV-1	28W018-1												-168	1	1	
	PBV-1	28W018												-167	1	1	
	XPBV-1	28W018-1												-166	1	1	
	XPBV-1	28W018												-165	1	1	
	PBY-5A	28W2010	1											AN442-D4	8	8	
	PBY-5B	28W2010	1											28W071-[redacted]	1	1	

O.H.	MODEL	NEXT ASSY.	REQ.	ST'D PARTS	LH REQ.	RH REQ.	PART NO.	LH REQ.	RH REQ.

REQUIREMENTS PER AIRPLANE | MAT. | PARTS LIST PER ASSY.

NOTED	NOTED	NOTED	
SPEC.	HEAT TREAT	FINISH	

DRAFT	CHECK	EXAM.	ENG.
[illegible]	[illegible]	N.M.P.	
DRAFT 5-9-37			4

REPLACES

REPLACED BY

LIMIT ON DIMENSIONS UNLESS OTHERWISE SPECIFIED ± .010

APPROVED [illegible] DATE 5-9-37

CALC.WT. ACT.WT.

SCALE 6"/1'0"

AC

NAVY NOTED

MATERIAL

CONSOLIDATED AIRCRAFT CORP. BUFFALO, N.Y.

STAMP PT. No. WHERE SHOWN

OPP. HAND —

NAME RIB #11 - WING - AILERON

SIZE D

28W071-217

SECTION @ 28W016

SUPPLIES & EQUIPMENT CLASSIFICATION			
LET	ALTERATION	DATE	BY
A	TRACED	5-5-37	[illegible]

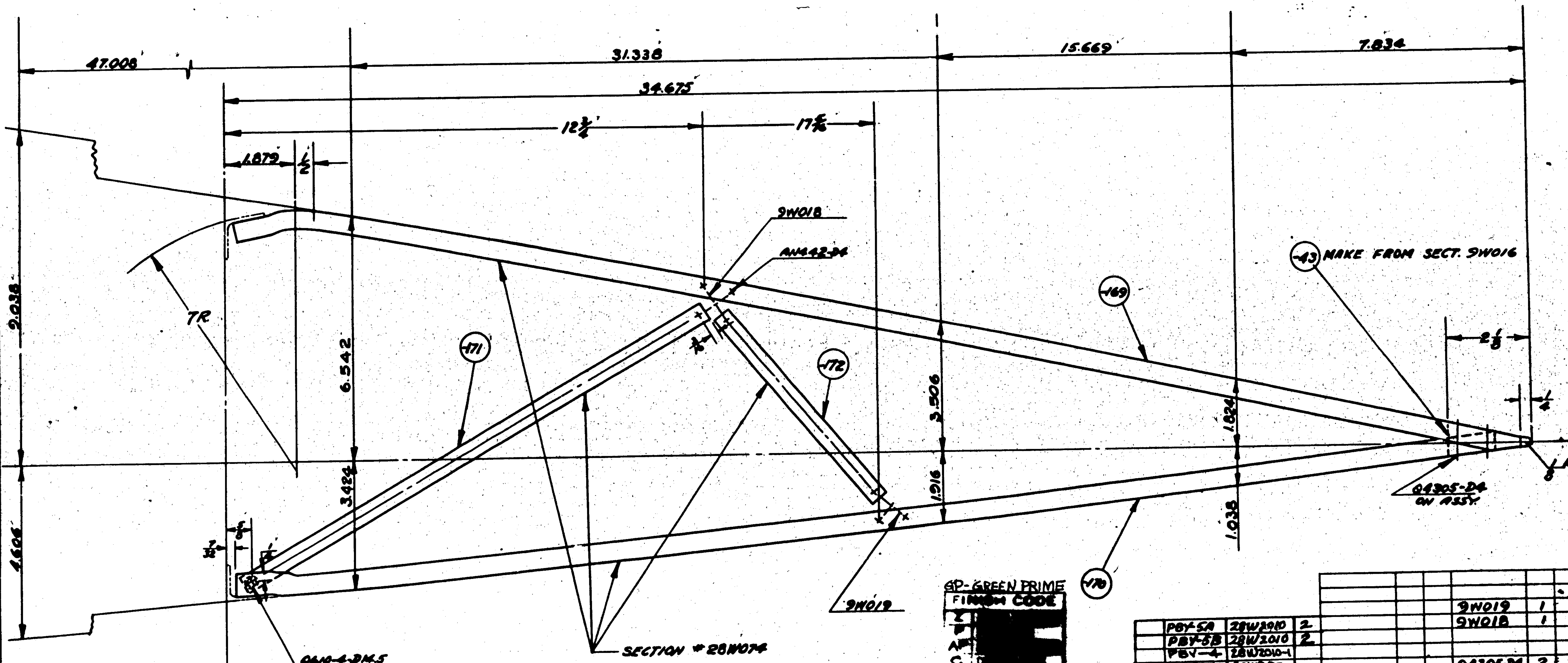

GP-GREEN PRIME

FINISH CODE	
Z	[redacted]
P	
AP	
C	

FINISH — Z-P-GP FOR PBY-1
Z-P-GP FOR PBY-2
Z-P-AP FOR PBY-3 & FUTURE

O.H.	MODEL	NEXT ASSY.	REQ.	STD PARTS	REQ. LH	REQ. RH	PART NO.	REQ. LH	REQ. RH
							9W019	1	1
	PBY-5A	28W2010	2				9W018	1	1
	PBY-5B	28W2010	2						
	PBY-4	28W2010-1							
	PBY-4	28W2010					Q4305-D4	2	2
	PBY-3	28W2010-1					Q610-4-DMS	1	1
	PBY-3	28W2010							
	PBY-2	28W2010-1							
	PBY-2	28W2010					-172	1	1
	PBY-1	28W010-1					-171	1	1
	PBY-1	28W010					-170	1	1
	XP3Y-1	28W010-1					-169	1	1
	XP3Y-1	28W010		AN442-D4	8	8	28W071-43	1	1

REQUIREMENTS PER AIRPLANE — MAT. ✓ — PARTS LIST PER ASSY.

REPLACES
REPLACED BY
LIMIT ON DIMENSIONS UNLESS OTHERWISE SPECIFIED ± .010

[redacted]

APPROVED 5-5-37 DATE
CALC.WT. ACT.WT.
SCALE 6"=1'0"
AC
NAVY NOTED
MATERIAL

NOTED	NOTED	NOTED ✓
SPEC.	HEAT TREAT	FINISH

DRAFT	CHECK	EXAM.	ENG.
5-10-37	H.M.P.		L
5-13-37	6-4-37		

CONSOLIDATED AIRCRAFT CORP. BUFFALO, N.Y.
STAMP PT. No. WHERE SHOWN

NAME: RIB #12 - WING - AILERON

OPP. HAND —

D 28W071-220

SUPPLIES & EQUIPMENT CLASSIFICATION			
LET	ALTERATION	DATE	BY
A	TRACED	[illegible]	
B	1/8 DIA. HOLE WAS 1/4 DIA.	4-18-41	Pomeroy

P&Y-5 EQ 428

GP-GREEN PRIME

FINISH CODE
[illegible]
[illegible]
[illegible]
C [illegible]

MAKE FROM SECT. 9W016 -31

Q4305-D4 ON ASSEMBLY

SUB-ASSY'LY -28

R.H. -22

13/32

20 1/8

1 25/64

37.209

24.806

12.403

6.201

33 3/16 (CHORD) BEFORE BENDING

01-K19-7 WASHER ER. SIDE OF WEB

DRILL #10 (.193)
AN520-10-6
AN315-3R
AN960-10 (UNDER BONDING)

7 29/64

1" OPEN ANGLE

1 1/8

4 EQUAL SPACES

7 SPACES @ 1 5/8

1X1 X 1/16 ANGLE
ALCOA #K-78J

RH. -10 LH. -9

SPEC. 46A9
24ST, COND'T.

Q4305-D4

RIVET ON ASS'Y

-87 L.H.
-88 R.H.

Q4305-D6

Q506A-2-4

29
020 SHEET
SPEC. 47A9
24ST COND'T.

5 EQUAL SPACES

4 EQUAL SPACES

BEND LINE

3 EQUAL SPACES

2.150

1.134

.430

.697

2.100

4.656

2.826

Q4305-D6
0°

8 1/4 R

4 SPACES @ 1 1/2

28W1061-1 L.H.
28W1061 R.H.

28W072 L.H.
28W072-1 R.H.

5

11

13 1/4

2° CLOSED ANGLE

1 1/8 DIA. HOLE IN WEB SYM.

B

-13 L.H.
-14 R.H.

-15 L.H.
-16 R.H.

-17 L.H.
-18 R.H.

-19 L.H.
-20 R.H.

3/16 X 3/16 X .040 ANGLE
ALCOA # K6240
SPEC. 46A9, 24ST, COND'T.

-27 L.H.
-28 R.H.

3/4 X 3/4 X 1/16 ANGLE
ALCOA # K5401 SPEC 46A9
24ST. COND. T.

SECTION A-A

-11 L.H. -12 R.H.

3/4 X 3/4 X 1/16 ANGLE
ALCOA # K6401

NOTE - ON ASSEMBLY OF 28W072 TO RIB, INSERT FABRIC IMPREGNATED WITH BITUMASTIC PAINT BETWEEN STEEL FITTING AND ALL AL. ALLOY PARTS TO WHICH IT ATTACHES.

NOTE -
ALL RIVETS Q4305-D4 EXCEPT AS NOTED
FINISH: E-P BEFORE ASSY. OF 28W072 & 28W072-1
FINISH: [redacted] P&Y-1; [redacted] -P&Y-2; AD-P&Y-3 & FUTURE
GP GP

-130	MN, (MA)	28W1260													
-131	SB-5 NAC/AC	28W1261-1													
-132	CB-5 ANC	28W1262-1	/												
-133	PBY-5B	28W1263-1	/												
-134	PBY-5A	28W1264	/												
-135	PBY-5	28W1265-1													
-136	PBY-4	28W1266-1													
-230	PBN-4	28W1060													
-231	PBY-3	28W2060-1													
-230	PBY-3	28W2060													
-231	PBY-2	28W2060-1													
-230	PBY-2	28W2060													
-231	PBY-1	28W010-1													
-230	PBY-1	28W010			AN315-3R	/	/								
-231	XPBY-1	28W010-1			AN520-10-6	/	/								
-230	XPBY-1	28W010			AN960-10	/	/								

LH	RH	PART NO.	LH REQ.	RH REQ.
		Q4305-D4	5	5
		Q4305-D4	7	7
		28W1061-1	/	
		28W1061		/
		-128		/
		-127	/	
		-88		/
		-87	/	
		-10		/
		-9	/	
		28W071-3	/	
		SUB-ASSEMBLY 28W071-2 (REF.)		
		OV-1230-7	2	2
		Q4305-D4	6	6
		Q4305-D4	30	30
		Q506A-2-4	/	2
		28W071-2		1
		28W071-1	/	
		28W072-1		/
		28W072	/	
		-31	/	/
		-29	/	/
		-20		/
		-18	/	
		-19		/
		-17	/	
		-16		/
		-15	/	
		-14		/
		-13	/	
		-12		/
		28W071-11	/	
		-10		/

REPLACES	APPR. [redacted]	10-27 DATE		
REPLACED BY	CALC. WT.	ACT. WT.	O.H.	MODUL.
LIMIT ON DIMENSIONS UNLESS OTHERWISE SPECIFIED ± .010	SCALE 6" = 1'0"		REQUIREMENTS PER AIRPLANE	
[redacted]	AC			
	NAVY NOTED		NOTED	NOTED
	MATERIAL		SPEC.	HEAT TREAT
CONSOLIDATED AIRCRAFT CORP. BUFFALO, N. Y.	STAMP PT. No. WHERE SHOWN			

NEXT ASSY. | REQ. | STD PARTS | MAT. (G) | PARTS LIST PER ASSY.

NOTED FINISH

DRAWN KMP | TRACED [illegible] | DRAFT | CHECK | EXAM. | ENG.

OPP. HAND 28W071-

NAME RIB #1 WING AILERON

SIZE D | DWG. 28W07[illegible]

SUPPLIES & EQUIPMENT CLASSIFICATION			
LET	ALTERATION	DATE	BY
A.	TRACED	4-26-37	SWAG

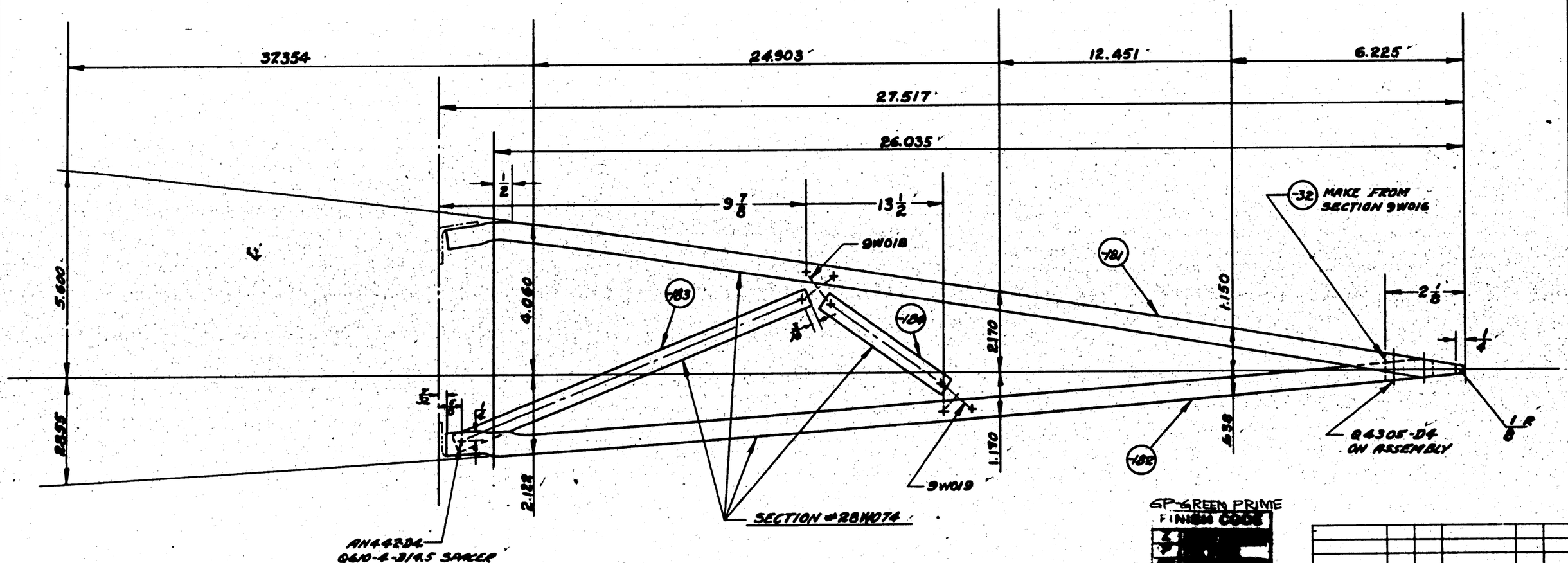

GP-GREEN PRIME FINISH CODE

FINISH - Z-P-[illegible] FOR PBV-1
-Z-P-[illegible] FOR PBV-2
-Z-P-AP FOR PBV-3 & FUTURE

											Q4305-D4	2	2
											Q6D-4-3145	1	1
	PBV-4	28W2010-1											
	PBV-4	28W2010									9W019	1	1
	PBV-3	28W2010-1									9W018	1	1
	PBV-3	28W2010											
	PBV-2	28W2010-1											
	PBV-2	28W2010									-184	1	1
	PBV-1	28W2010-1									-183	1	1
	PBV-1	28W2010									-182	1	1
	XPBV-1	28W2010-1									-181	1	1
	XPBV-1	28W2010								AN442-D4	8	8	28W071-32	1	1
	PBV-6A	28W2010	2								LH	RH	PART NO.	LH	RH
	PBV-6B	28W2010	2								REQ.			REQ.	

REPLACES	APPROVED [illegible] DATE 12-27-37						
REPLACED BY	CALC.WT.	ACT.WT.	O.H.	MODEL	NEXT ASSY.	REQ.	ST'D PARTS
LIMIT ON DIMENSIONS UNLESS OTHERWISE SPECIFIED ± .010	SCALE 6"-1'0"		REQUIREMENTS PER AIRPLANE				MAT.
[redacted]	AC						
	NAVY NOTED		NOTED	NOTED	NOTED.		
	MATERIAL		SPEC.	HEAT TREAT	FINISH		
CONSOLIDATED AIRCRAFT CORP. BUFFALO, N.Y.	STAMP PT. No. WHERE SHOWN		NAME RIB #1.2 - WING - AILERON				

PARTS LIST PER ASSY.

G-10-[illegible]	H.M.P.		
[illegible] 1937		L.	
DRAFT	CHECK	EXAM.	ENG.

OPP. HAND —

SIZE D SHEET 28W071-233

SUPPLIES & EQUIPMENT CLASSIFICATION			
LET	ALTERATION	DATE	BY
A	TRACED	4-29-37	[redacted]

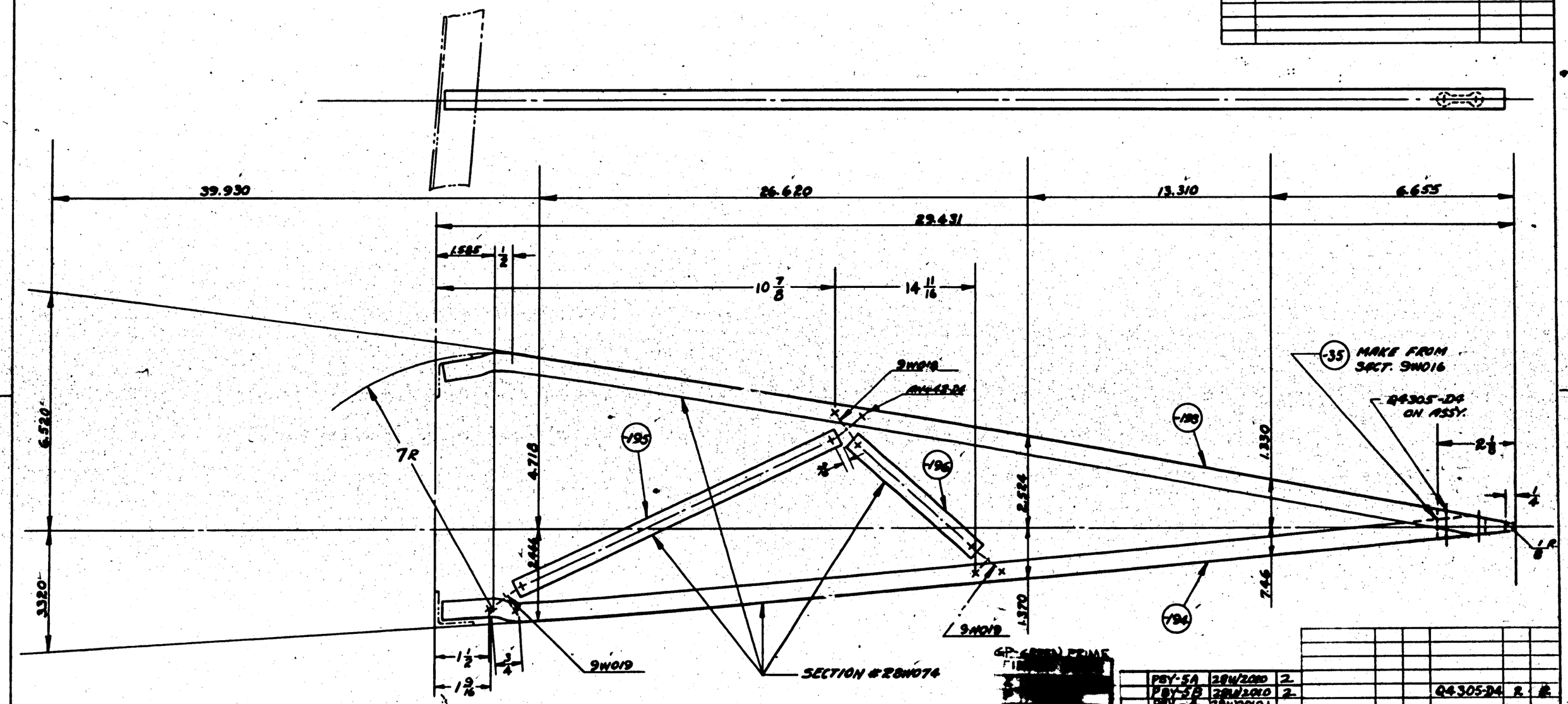

	PBY-5A	28W2010	2								
	PBY-5B	28W2010	2						Q4305-D4	2	2
	PBY-4	28W2010-1									
	PBY-4	28W2010							9W019	2	2
	PBY-3	28W2010-1							9W018	1	1
	PBY-3	28W2010									
	PBY-2	28W2010-1									
	PBY-2	28W2010							-196	1	1
	PBY-1	28W2010-1							-198	1	1
	PBY-1	28W2010							-194	1	1
	XPBY-1	28W2010-1							-195	1	1
	XPBY-1	28W2010			AN442-D4	10	10	28W071-35	1	1
O.H.	MODEL	NEXT ASSY.	REQ.		ST'D PARTS	REQ. LH	REQ. RH	PART NO.	REQ. LH	REQ. RH

REQUIREMENTS PER AIRPLANE | MAT. | PARTS LIST PER ASSY.

NAVY NOTED	NOTED	NOTED	NOT S.D.				L
MATERIAL	SPEC.	HEAT TREAT	FINISH	DRAFT	CHECK	EXAM.	REG.

REPLACES

REPLACED BY

LIMIT ON DIMENSIONS UNLESS OTHERWISE SPECIFIED ± .010

APPROVED [redacted] DATE 4-29-37

CALC. WT. ACT. WT.

SCALE 6"-1'-0"

AC

CONSOLIDATED AIRCRAFT CORP. BUFFALO, N. Y.

STAMP PT. No. WHERE SHOWN

NAME

RIB #4 - WING - AILERON

OPP. HAND

D 28W071-24

SUPPLIES & EQUIPMENT CLASSIFICATION			
LET	ALTERATION	DATE	BY
D	TRACED	7-24-39	ELZ
E	REMOVED 2 RIVETS AT FRONT BOTTOM CORNER	7-24-39	ELZ
F	.060 TOGGLE WAS .040	2-11-42	[illegible]
G	IN MAT. NOTE FOR -5, -6, -9, -10 CHANGED FROM "3/4 x 3/4 x 1/16 ANGLE ALCOA DIE # K5401, SPEC. 46A9 CONDT (24ST)" TO "Y-2-A2ST." FOR -7, -8, -13, -14 CHANGED FROM "9/16 x 9/16 x .040 ANGLE ALCOA DIE # K6240 SPEC. 46A9 CONDT 24ST." TO "Y-2-A12T." W.I.C. No. 4-8-42		

B.A.C. E.O. # 279

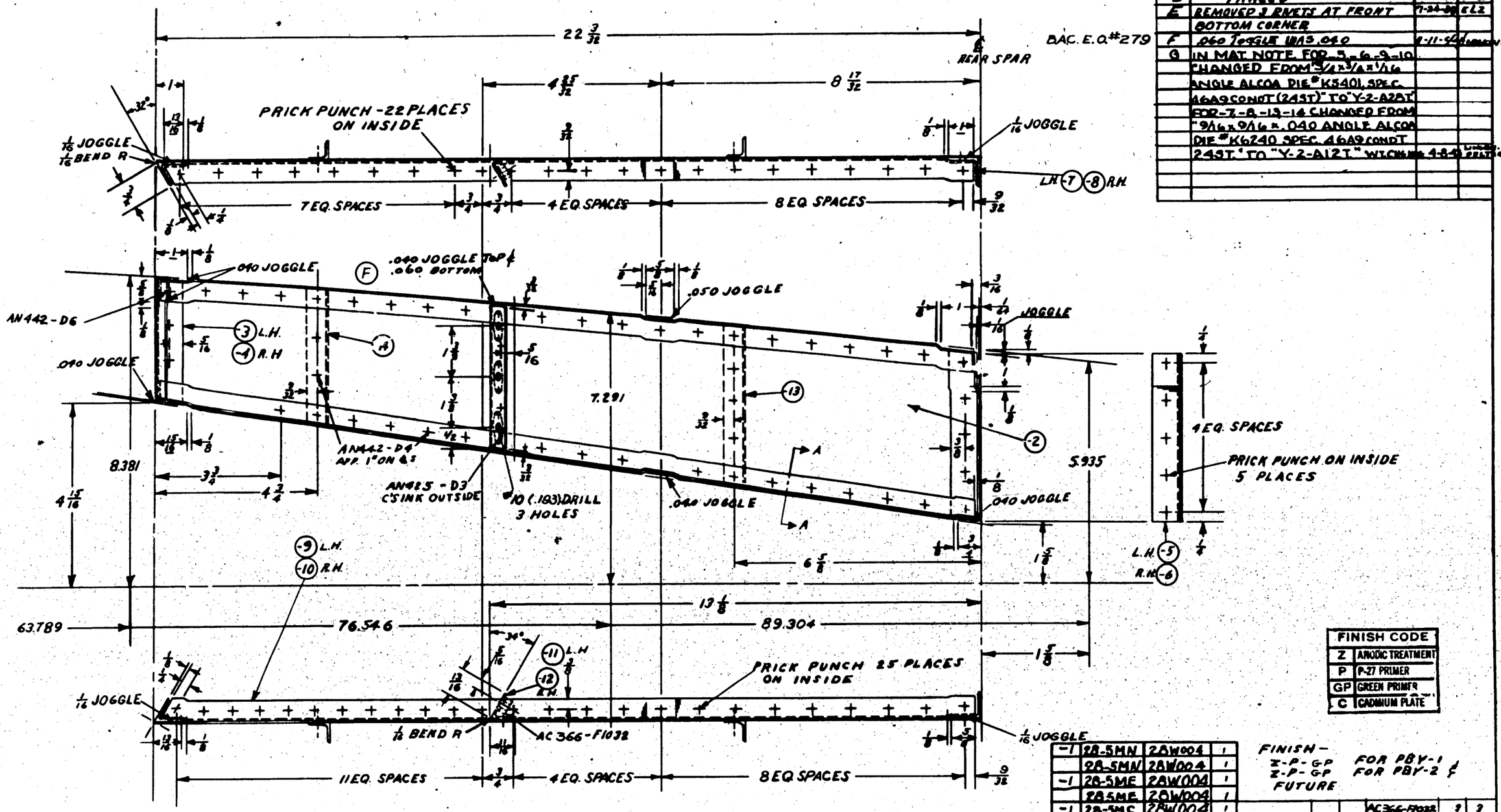

L.H. SHOWN
R.H. OPPOSITE

FINISH CODE	
Z	ANODIC TREATMENT
P	P-27 PRIMER
GP	GREEN PRIMER
C	CADMIUM PLATE

FINISH — Z-P-GP FOR PBY-1 & Z-P-GP FUTURE FOR PBY-2

O.H.	MODEL	NEXT ASSY.	REQ.	STD PARTS	LH REQ.	RH REQ.	PART NO.	LH REQ.	RH REQ.
-1	28-5MN	28W004	1				AC366-F1032	2	2
	28-5MN	28W004	1				28W095-14	1	1
-1	28-5ME	28W004	1				-13	1	1
	28-5ME	28W004	1				-12		1
-1	28-5MC	28W004	1				-11	1	
	28-5MC	28W004	1				-10		1
-1	285MA	28W004	1				-9	1	
	285MA	28W004	1				-8		1
-R	PBY-5A/A	28W009	1 EA				-7	1	
-1	PBY-4	28W004-1	1				-6		1
	PBY-4	28W004	1				-5	1	
-1	PBY-3	28W004-1	1				-4		1
	PBY-3	28W004	1				-3	1	
-1	PBY-2	28W004-1	1				-2	1	1
	PBY-2	28W004	1	AN425-D3					
-1	PBY-1	28W004-1	1	AN442-D6					
	PBY-1	28W004	1	AN442-B4					
-L	PBY-5A/A	28W004	1 EA						

-1	PBY-5	28004	1	-1	PBY-4
	PBY-5	28004	1		PBY-4
-1	OA-10	28004	1	-1	PBY-3
	OA-10	28004	1		PBY-3
-1	285AMN	28004	1	-1	PBY-2
	285AMN	28004	1		PBY-2
-1	285AMC	28004	1	-1	PBY-1
	285AMC	28004	1		PBY-1

MAT'L NOTE
-2 .025 ALLOY SH'T SPEC. 47A10 (COND.T) (24ST)
-3 - 4.064 AL ALLOY SH'T. SPEC. 47A10 (COND.T) (24ST)
-5-6-9-10 Y-2-A28T.
-7-8-13-14 Y-2-A12T
-11-12 SPEC. 47A10 (COND.T) (24ST)

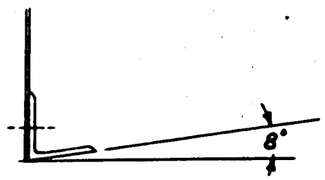

SECTION A-A
FULL SIZE

REPLACES	
REPLACED BY	
LIMIT OR DIMENSIONS UNLESS OTHERWISE SPECIFIED	±.015 ± 1/2°
APPROVED	DATE 7-24-39
CALC. WT. .760	ACT. WT.
SCALE 6" = 1'-0"	
AC	
NAVY NOTED	
MATERIAL	

NOTED	NONE	NOTED	
SPEC.	HEAT TREAT	FINISH	

CONSOLIDATED AIRCRAFT CORP. BUFFALO, N. Y.
STAMP PT. No. WHERE SHOWN

NAME BULKHEAD WING - OUTER PANEL - STA. # 25 REAR

OPP HAND 28W095-1

DWG. D SIZE 28W095

VOLK 4-9-34 DRAFT CHECK ENGR. ENG.

R 28W095

SUPPLIES & EQUIPMENT CLASSIFICATION			
LET	ALTERATION	DATE	BY
G	TRACED		
H	CH'GD -13 TO -13L & -13 R		
	CH'GD -14 TO -14L & -14 R		
I	.140 JOGGLE WAS .090		
	1/4 DIM. WAS 7/8 & ADDED FBY-5 BOM		
J	.040 JOGGLE WAS .030		
K	.040 JOGGLE WAS .090		
L	IN MAT. NOTE CHANGED MAT. FOR -5,-6,-9,-10 FROM 3/16 x 3/16 x .040 ANGLE-ALCOA DIE #K3401 AL. ALL EXT. SPEC. A-A A9-T (24ST) TO "Y-2-A24ST" & FOR -7,-8,-12 1/2, -14 1/2 FROM "9/16 x 9/16 x .040 ANGLE-ALCOA DIE #K6240 AL. ALL EXTR. SPEC. A-A A9-T, 24ST TO "Y-2-A12T" WT. CHG. NO.		

EQ. TO 903
BAC EQ. TO 246 & AC EQ. TO 222
SEC. EQ. TO 279
BAC. EQ. TO 435

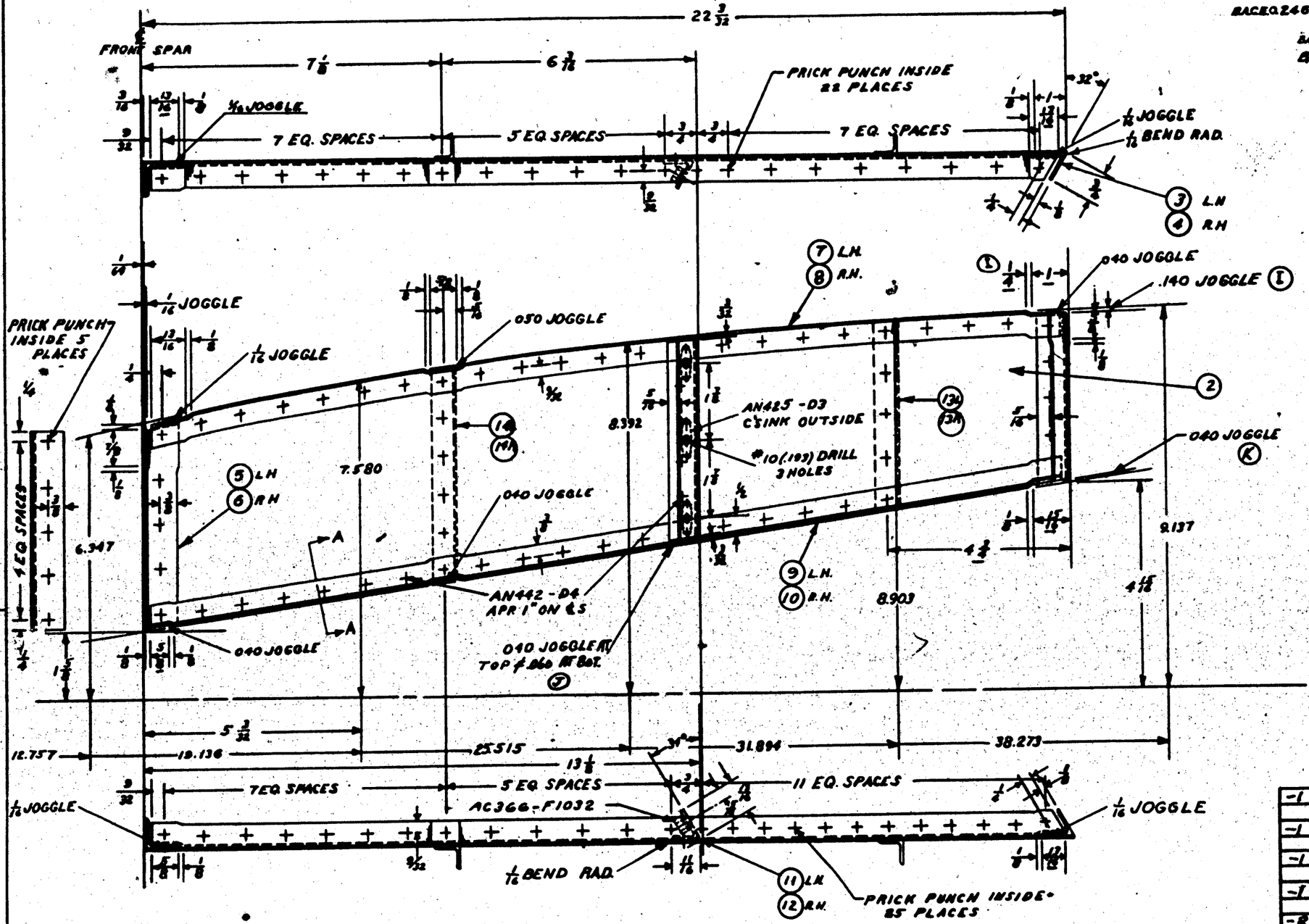

FINISH-
Z-P-6P FOR PBY-5
Z-P-6P FOR PBY-2 & FLAPS

MAT'L NOTE

-2	.025	AL. ALLOY SH'T SPEC. 47A10 (COND T) ALLOY 24ST
-3-4	.064	" " " " " " " " "
-11-12	.040	" " " " " " " " "
-5-6-9-10		Y-2-A28T
-7-8-12-12½-13-13A-14½		Y-2-A12T

LH. SHOWN
R.H. OPPOSITE.

-1	OA-10	28W004	1	-1	285MN	28W004	1				AC366-F1032	3	3
	OA-10	28W004	1		285MN	28W004	1				28W004-MR		1
-1	285AMN	28W004	1	-1	285ME	28W004	1				-14L	1	
	285AMN	28W004	1		285ME	28W004	1				-13R		1
-1	285AMC	28W004	1	-1	285MC	28W004	1				-13L	1	
	285AMC	28W004	1		285MC	28W004	1				-12		1
				-1	285MA	28W004	1				-11	1	
					285MA	28W004	1				-10		1
				-R	PBY-5AMR	28W004	1 EA				-9	1	
				-L	PBY-5AML	28W004	1 EA				-8		1
				-1	PBY-5AS	28W004-1	1				-7	1	
					PBY-5AS	28W004	1				-6		1
				-1	PBY-3	28W004-1	1				-5	1	
					PBY-3	28W004	1				-4		1
				-1	PBY-2	28W004-1	1				-3	1	
					PBY-2	28W004	1				28W004-2	1	1
				-1	PBY-1	28W004-1	1				PART NO.	LH REQ.	RH REQ.
					PBY-1	28W004	1						
				-1	XPBY-1	28W004-1	1						
					XPBY-1	28W004	1	AN425-D3					

O.H.	MODEL	NEXT ASSY.	REQ.	ST'D PARTS

SECTION A-A
FULL SIZE

REPLACES	APPROVED	DATE		
REPLACED BY	CALC. WT.	ACT. WT.		
LIMIT OR SUPERSEDED UNLESS OTHERWISE SPECIFIED ± .015 & °	SCALE 6" - 1'-0"		REQUIREMENTS PER AIRPLANE	MAT.
	AC			
	NAVY NOTED		NOTED	NONE
	MATERIAL		SPEC.	HEAT TREAT

NOTED

FINISH	VOLK
	6-10-36
	DRAFT CHECK ENGR. ENG.

CONSOLIDATED AIRCRAFT CORP. BUFFALO, N. Y.
STAMP PT. No. WHERE SHOWN

NAME: BULKHEAD
WING - OUTER PANEL - STA. #25 - FRONT

DWG. NUMB. 28W004-1
D 28W00[redacted]

LET	ALTERATION	DATE	BY
E	TRACED		
F	1/8 WAS 5/16; 13/16 WAS 5/8; 5/8 WAS 13/16; 1/16 WAS 1/8	1-27-38	
G.	ADDED 3°, 8°, 1", & 1 1/4"		
H.	26 WAS 29; 27 WAS 30; 23 5/16 WAS 23 ...; 1 WAS 15/16; 1 1/16 WAS 15/16; 3 25/32 WAS 3 3/4; 4 3/8 WAS 4 9/32; 4 27/32 WAS 4 23/32; 5 1/8 WAS 4 63/64	1-27-38	
	ADDED PBY-4 REQ'TS; AL WAS ALCL	1-27-38	
I	4 7/8 WAS 5 1/8, .060 JOGGLE WAS .040 - ADDED PBY-5 REQ. 13/16 WAS 5/8	10-11-40	

BELL CO 190 — BELL CO 190 B.A.C.E.0287

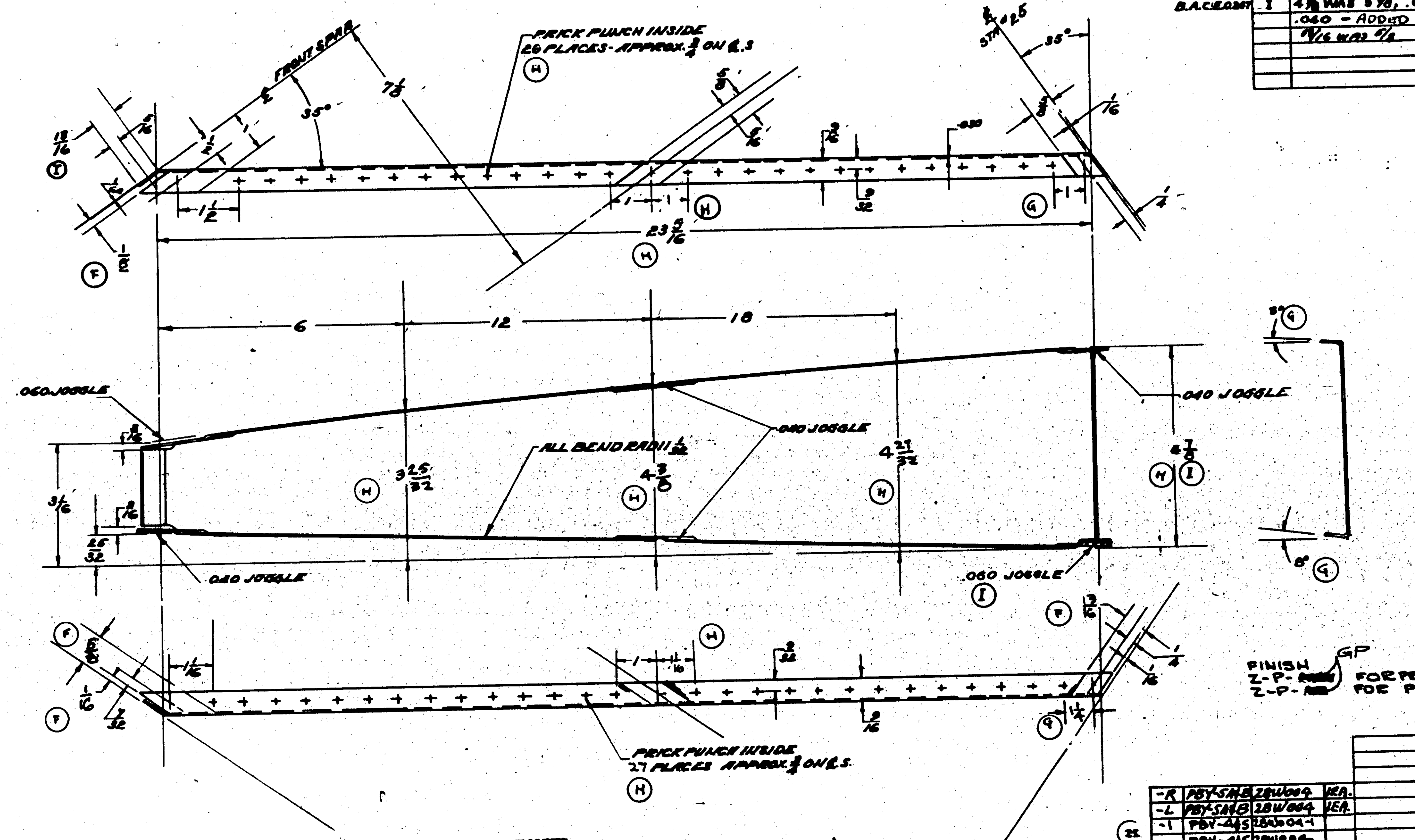

MAT'L.
AL ALLOY SH. SPEC. 47A10
(COND. T.) ALLOY 24 ST.

L.H. SHOWN
R.H. OPPOSITE

GP-GREEN PRIME [redacted]

FINISH GP
Z-P-[redacted] FOR PBY-1
Z-P-[redacted] FOR PBY-2 & FUTURE.

O.H.	MODEL	NEXT ASSY.	REQ.
-R	PBY-5A&B	28W004	1EA.
-L	PBY-5A&B	28W004	1EA.
-1	PBY-4&5	28W004-1	
	PBY-4&5	28W004	
-1	PBY-3	28W004-1	
	PBY-3	28W004	
-1	PBY-2	28W004-1	
	PBY-2	28W004	
-1	PBY-1	28W004-1	
	PBY-1	28W004	
-1	XP3Y-1	28W004-1	
	XP3Y-1	28W004	

REQUIREMENTS PER AIRPLANE: 1

STD PARTS	REQ. LH	REQ. RH	PART NO.	REQ. LH	REQ. RH

MAT. — PARTS LIST PER ASSY.

REPLACES
REPLACED BY
LIMIT ON DIMENSIONS UNLESS OTHERWISE SPECIFIED ±.015 & 1/2°
[redacted]

RLW APPROVED 4-23-37 DATE
.350 CALC. WT. — ACT. WT.
SCALE 6"=1'-0"
AC
NAVY NOTED

MATERIAL	SPEC.	HEAT TREAT	FINISH
NOTED	NOTED	NONE	NOTED.

DRAFT	CHECK	EXAM.	ENG.
VOLK		MILLER	
4-19-37	5-11-37		

CONSOLIDATED AIRCRAFT CORP. BUFFALO, N.Y.
STAMP PT. No. WHERE SHOWN

NAME: BULKHEAD-DIAGONAL WING-OUTER PANEL STA. #25 TO FRONT SPAR

OPP. HAND 28W005-1

D 28W005

SULLIVAN-McGREGOR CO. INC. BUFFALO
IMPERIAL TRACING CLOTH

SUPPLIES & EQUIPMENT CLASSIFICATION			
LET	ALTERATION	DATE	BY
D	TRACED	[illegible]	[illegible]
E	CHANGED JOGGLE FROM .040 TO .060	[illegible]	[illegible]

C.O. 3696

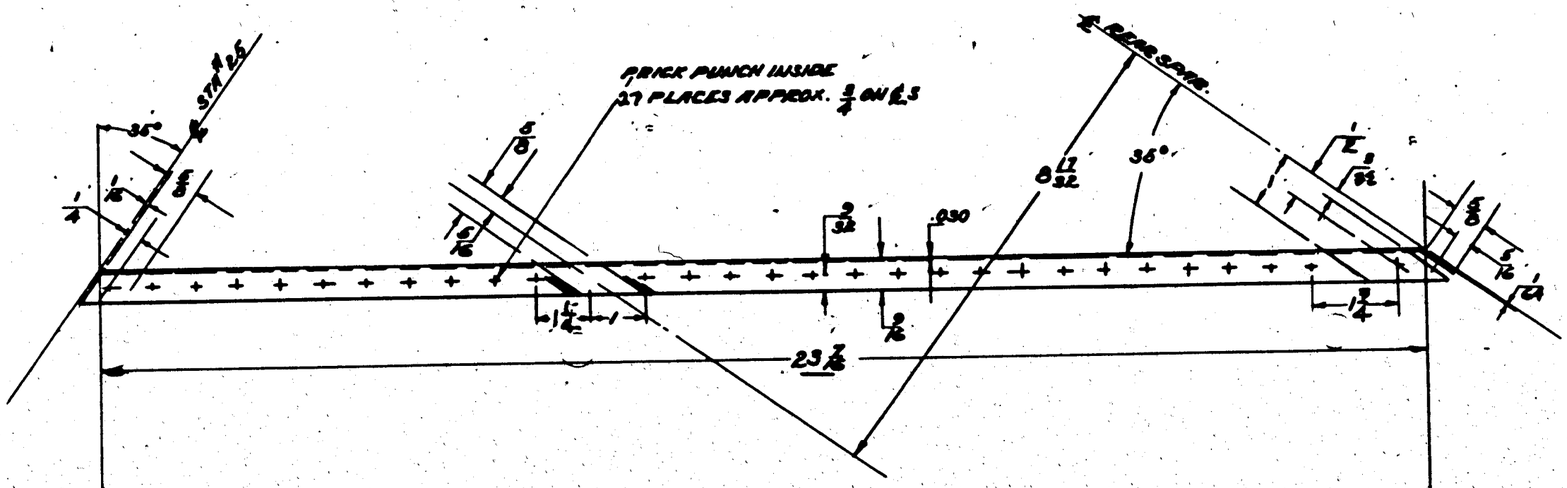

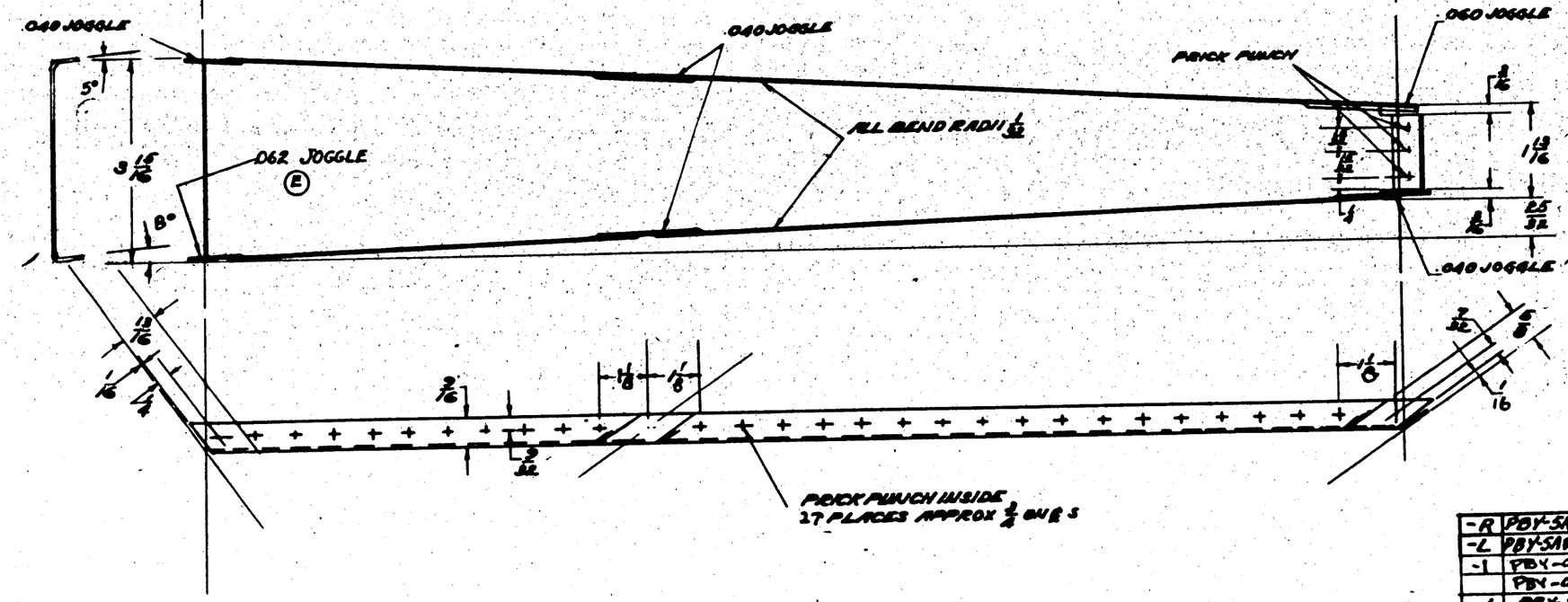

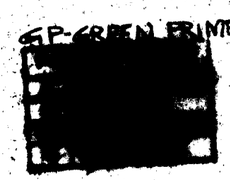

FINISH GP
Z-P [illegible] FOR PBY-1
Z-P [illegible] FOR PBY-2 & FUTURE

MATL.
AL. ALLOY SH. SPEC. 67A10
(COND'T.) ALLOY 24ST

L.H SHOWN
R.H. OPPOSITE

-R	PBY-5A&B	28W004	1EA								
-L	PBY-5A&B	28W004	1EA								
-1	PBY-4	28W004-1									
	PBY-4	28W004									
-1	PBY-3	28W004-1									
	PBY-3	28W004									
W	PBY-2	28W004-1									
	PBY-2	28W004									
-1	PBY-1	28W004-1									
	PBY-1	28W004									
-1	XPBY-1	28W004-1									
	XPBY-1	28W004									

LH REQ.	RH REQ.	PART NO.	LH REQ.	RH REQ.

REPLACES	APPROVED	DATE	O.H.	MODEL	NEXT ASSY.	REQ.	ST'D PARTS	MAT.	PARTS LIST PER ASSY.
REPLACED BY	[illegible]	4-23-37							
LIMIT ON DIMENSIONS UNLESS OTHERWISE SPECIFIED [illegible] ± .010 ± 1/2°	CALC. WT. .29	ACT. WT.	REQUIREMENTS PER AIRPLANE						
	SCALE HALF SIZE								
	AC								
	NAVY NOTED		NOTED	NONE			NOTED		
	MATERIAL		SPEC.	HEAT TREAT			FINISH		

DRAFT	CHECK	EXAM.	ENG.
4/23/37	4/23/37		

CONSOLIDATED AIRCRAFT CORP. BUFFALO, N. Y.
STAMP PT. No. WHERE SHOWN

NAME BULKHEAD-DIAGONAL
WING OUTER PANEL STA 26 TO RIB NO. 6

OPP. HAND 28W033-1

SIZE D CODE 28W033

LET	ALTERATION	DATE	BY
G	TRACED. NO WT. CHG.	10-[illegible]-40	OLIVER

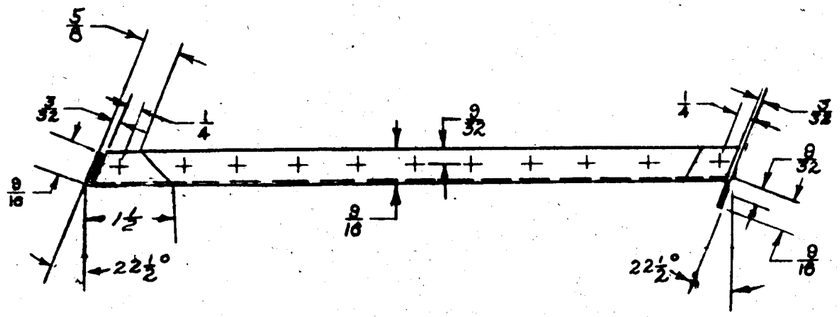

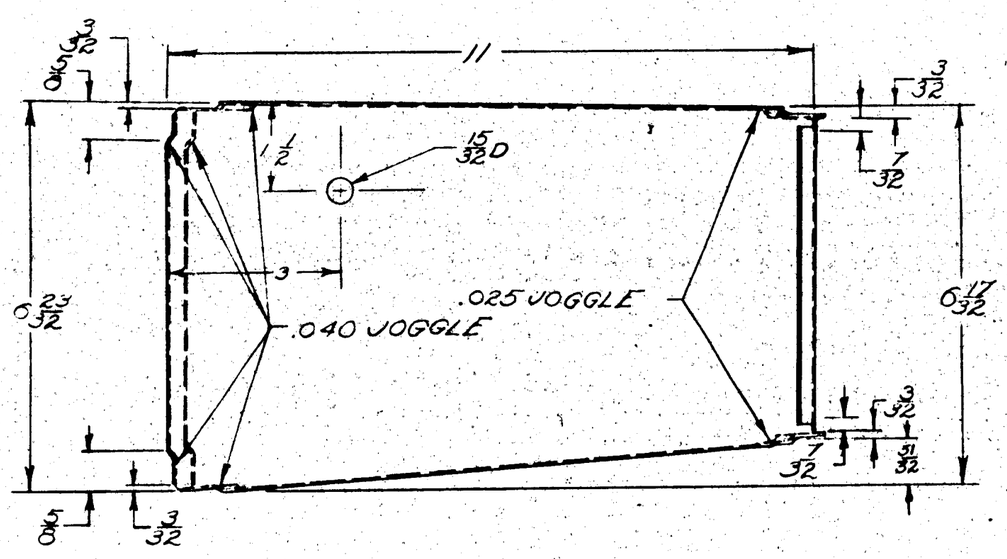

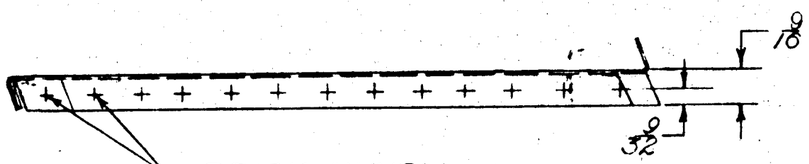

PRICK PUNCH
INSIDE 18 PLACES
APPROX 5/8 ON ℄

NOTE:
ALL BEND RADII 1/16

FINISH CODE	
Z	ANODIC TREATM.
P	P-27 PRIMER
GP	GREEN PRIMER
C	CADMIUM PLATE

ASSY. DASH NO.	MODEL	NEXT ASSY.	REQ
LH R	28-5AMN	28W004 L&R	1 EA.
LH R	PBY-5B	28W004 L&R	1 EA.
LH R	28-AMC	28W004 L&R	1 EA
LH R	28-5MN	28W004 L&R	1 EA.
LH R	28-5ME	28W004 L&R	1 EA.
LH R	28-5MC	28W004 L&R	1 EA.
LH R	28-5MA	28W004 L&R	1 EA.
-1	PBY5&5A	28W004 L	1
	PBY5&5A	28W004 R	1
-1	PBY-4	28W004-1	
	PBY-4	28W004	
-1	PBY-3	28W004-1	
	PBY-3	28W004	
-1	PBY-2	28W004-1	
	PBY-2	28W004	
-1	PBY-1	28W004-1	
	PBY-1	28W004	
-1	XPBY-1	28W004-1	
	XPBY-1	28W004	

REQUIREMENTS PER AIRPLANE

REPLACED 28W127-3-3-37 — .180 CALC WT.

REPLACED BY: — ACT. WT.

UNLESS OTHERWISE SPECIFIED ± .015 ± 1°

SCALE 6" = 1'-0"

STAMP PART NUMBER WHERE SHOWN

PART NO.	STOCK	MATERIAL	SPEC.	LH REQ	RH REQ	LH REQ	RH REQ	LH REQ	RH REQ	LH REQ	RH REQ	LH REQ	RH REQ
	PARTS LIST PER ASSY			-0		-2		-3		-4		-5	
-6	.025 x 5 x 12 1/8	AL. AL.	QQ-A-355										

AC		VOLK	ANDERSON			LCW
NAVY NONE	2-P-6P	4-19-34	3-5-37			
HEAT TREAT	FINISH	DRAFT	CHECK	STRUCT	MAT	APPROV	ENG.

NAME BULKHEAD-DIAG-WING OUTER PANEL-STA 23-24 REER

OPP. HAND 28W127-1

CONSOLIDATED VULTEE AIRCRAFT CORP. SAN DIEGO DIVISION . . SAN DIEGO, CALIF.

DWG SIZE D — 28W127

SUPPLIES & EQUIPMENT CLASSIFICATION			
LET	ALTERATION	DATE	BY
H	TRACED	4-23-37	DCM
I	-2 & -3 WERE .037	9/27/37	LM
J	REMOVED -98-10 & ADDED -11. ADDED NOTE TO CUT SLOT IN -4 & -5	11-15-37	DUNN
K	ADDED DETAIL -11 & 5/16 DIM. TO RECT. HOLE	11-27-37	DUNN
L	DIMS. CHNGD - LWR. I WAS 1 1/2 UPPR" WAS 1/2 - 1/8 WAS 1/2	10-4-40	MADDUX
M	DIM. 34 WAS 25/32. Q616-14-23 REPLACES Q616-14-24 ON FACE OF DWG & B/M.	5-12-41	Morgan
N	CHG DIMS ON FACE: 230 WAS 14 1.480 WAS 1.460	7-8-42	Owens

B.A.C.E.O. 194

E.O. 455 PDY5

EO 4R2

SECTION A-A

SECTION B-B

SECTION C-C

SECTION E-E

SECTION J-J

SECTION F-F

SECTION H-H

DETAIL -11

11/16 O.D. x 1/8 WALL TUBE CHR. MOLY STL SPEC. 4130 T18a

-6 -7

11/16 DRILL

REAM THRU .499 +.001 -.000

-4

M

1/8 DRILL AT CORNERS

WELD

GUSSET -063 ST. SHEET SPEC. 4130 T4a

-11

CUT SLOT IN -4 & -5 TO PLACE -11 AS SHOWN. SLOT WIDTH 9/32.

Q616-14-16

Q616-14-23

NOTE
PRESS INTO PLACE (M) AFTER H.T. & PLATING

L.H. -2 .050 CHR MOLY STL SPEC. 4130 T4a

R.H. -3

L.H. -4 .078 CHR. MOLY STL SPEC. 4130 T4a

R.H. -5

NOTE
ALL CORNER & BEND RADII ON -2 & -3 1/16 UNLESS OTHERWISE SHOWN

FINISH -
PBY-1 C-2 ALV
PBY-2, PBY-3, PBY-4, C-P- AL
PBY-5 & FUTURES

-1	PBY-5	28W020-1						28W133-11	1		
	PBY-5	28W020						Q616-14-16	1	1	
-1	PBY-4	28W020-1						Q616-14-23	1	1	
	PBY-4	28W020									
-1	PBY-3	28W020-1									
	PBY-3	28W020									
-1	PBY-2	28W020-1						28W133-7	1	1	
	PBY-2	28W020						28W133-6	1	1	
-1	PBY-1	28W020-1						-5			1
	PBY-1	28W020						-4	1		
-1	XPBY-1	28W020-1	1					-3		1	
	XPBY-1	28W020	1					-2	1		

REPLACES		APPROVED	DATE	O.H.	MODEL	NEXT ASSY	REQ.	ST'D PARTS	LH REQ.	RH REQ.	PART NO.	LH REQ.	RH REQ.
REPLACED BY			4-23-37								PARTS LIST PER ASSY.		
LIMIT ON DIMENSIONS UNLESS OTHERWISE SPECIFIED	± .010 & ± 1°	CALC WT. 79	ACT WT.	SCALE 12" = 1'-0"	REQUIREMENTS PER AIRPLANE			MAT			CORTE Thurber DMS		
		AC									4-25-34 5-11-37		
		NAVY NOTED		NOTED	150,000 PSI SAE 2315-3 See Note			NOTED			DRAFT CHECK EXAM ENG.		
		MATERIAL		SPEC.	HEAT TREAT			FINISH			OPP HAND 28W133-1		

CONSOLIDATED AIRCRAFT CORP. BUFFALO N.Y.

STAMP PT. No. WHERE SHOWN

NAME FITTING - WING - FLOAT STRUT - ATTACHM. FRONT

DWG SIZE D

28W133

SUPPLIES & EQUIPMENT CLASSIFICATION			
LET	ALTERATION	DATE	BY
E	TRACED	4-58	

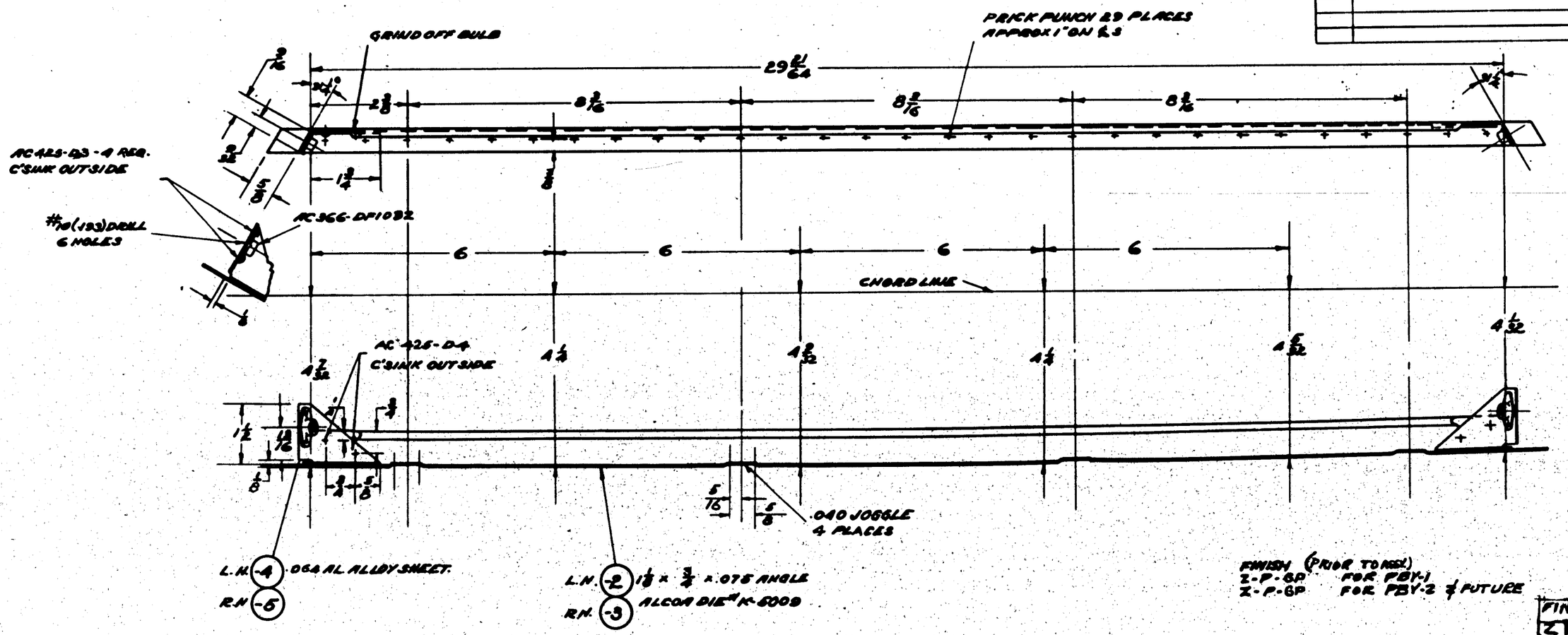
GRIND OFF BULB
PRICK PUNCH 29 PLACES APPROX 1" ON CS
29 21/64
AC 425-D3 - 4 REQ. C'SINK OUTSIDE
#40 (.098) DRILL 6 HOLES
AC 366-DF1032
6
CHORD LINE
AC 425-D4 C'SINK OUTSIDE
.040 JOGGLE 4 PLACES
L.H. -4 .064 AL ALLOY SHEET
R.H. -5
L.H. -2 1 1/2 x 3/4 x .075 ANGLE
R.H. -3 ALCOA DIE #K-6009

FINISH (PRIOR TO REL)
Z-P-GP FOR PBY-1
Z-P-GP FOR PBY-2 & FUTURE

FINISH CODE	
Z	ANODIC TREATMENT
P	P-37 PRIMER
AP	ALUMINIZED PRIMER
C	CADMIUM PLATE
GP	GARDEN PRIMER

L.H. SHOWN
R.H. OPPOSITE

-R	PBY-2A	28W004	1EA									
-L	PBY-2A	28W004	1EA									
-1	PBY-4	28W0041										
	PBY-4	28W004										
-1	PBY-3	28W0041										
	PBY-3	28W004										
-1	PBY-2	28W0041										
	PBY-2	28W004										
-1	PBY-1	28W0041										
	PBY-1	28W004		AC365-[illegible]	2	2		-5	1	1		
-1	XPBY-1	28W0041		AC425-D3				-4	1	1		
	XPBY-1	28W004		AC425-D4			28W137-2	-3	1	1		
O.H.	MODEL	NEXT ASSY.	REQ.	ST'D PARTS	LH REQ.	RH REQ.	PART NO.		LH REQ.	RH REQ.		

REPLACES	
REPLACED BY	
LIMIT ON DIMENSIONS UNLESS OTHERWISE SPECIFIED	± .015 & 1° / .005
APPROVED	RCW 4-25-57
CALC. WT.	.520
ACT. WT.	
SCALE	6"=1'-0"
AC	
NAVY	NOTED
MATERIAL	REQUIREMENTS PER AIRPLANE
	NOTED / NONE
	SPEC. / HEAT TREAT
MAT.	PARTS LIST PER ASSY.
	NOTED
	FINISH

VOLK				
4-25-57	5-12-57	6-1-57		
DRAFT	CHECK	EXAM.	ENG.	

CONSOLIDATED AIRCRAFT CORP. BUFFALO, N. Y.
STAMP PT. No. WHERE SHOWN

NAME BULKHEAD - WING - OUTER PANEL - STA. 26 - LOWER CENTER.

OPP. HAND 28W137-1

SIZE D — DWG. 28W137

ALL AL. ALLOY SHEET SPEC. AN-QQA-[illegible] (COMP. 7) ALLOY & T EXCEPT AS NOTED
ALL AL. ALLOY EXTRUSIONS SPEC. AN-QQA-[illegible] (COMP. T) ALLOY & T EXCEPT AS NOTED
HEAT TREAT ALL CORROSION RESISTANT STEEL PER SPEC. 2053
RIVETS AL. ALLOY EXCEPT AS NOTED

OVERBEE

R LEIMBACH

SUPPLIES & EQUIPMENT CLASSIFICATION			
LET	ALTERATION	DATE	BY
E	TRACED UP TO DATE	9-1-36	[illegible]
F	SPEC. WAS 46 AB COND. "AS CLAD" AT REQ. OF ALCOA	2-25-37	SMALL
G	RELOCATED 4H; -6 & -7 FOR PBY-2 WAS	5-28-37	"
	-4 & -5; ADDED PBY-3 REQ'TS		"
H	"DIE NO. AS NOTED WAS "R 4687"		"
I	-3 LH WAS "2 L.H."; "2 R.H. WAS -3		"
	R.H. "ADDED "4-6 & 4-7"		"
J	ADDED "-6 & -7"		"
K	ADDED -8 & -9 AND	1-17-38	[illegible]
	PBY-4 REQUIREMENTS	"	"
L	ADDED -.025 TOL. ON OUTSDG. LEG	11-12-40	[illegible]
M	TOLERANCE OF .035 ADDED FOR PBY-5	1-16-41	[illegible]

BRAC. EQ 269

BREWSTER EQ 269A

15.321

A

A

4.280

6.094

8.729

10.695

12.358

14.756

2½ 2½ 4½ 4½ 4½ 9 2½

6" = 1 FT.

(I)

28W164-3 L.H. SHOWN
28W164-2 R.H. OPPOSITE
28W164-4 & -6 L.H. SHOWN AND AS NOTED
28W164-5 & -7 R.H. OPPOSITE AND AS NOTED
28W164-8 L.H. SHOWN
(K) 28W164-9 R.H.-OPPOSITE

FINISH:
ANODIZE
P.27 PRIMER
GREEN PRIMER

NOTE:- (J)
-4,-5,-6 & -7 TO BE TWISTED APPROX. 3° AT THIS END TO FIT OUTER PANEL LEADING EDGE

(M)
MINUS TOL. .025 ON XPBY-1
MINUS TOL. = .035 ON PBY-5
AFTER FORMING

(L)

(G)

MAKE FROM ALCOA DIE NO. AS NOTED (H)
ALUM. ALLOY

SECT A-A
SCALE 12 IN = 1 FT.

C 704966 77713

C 91876 1-904 C 68476 1-32

PART NO.	MAKE FROM ALCOA DIE NO.	MODEL PBY-1		MODEL PBY-2		MODEL PBY-3		MODEL PBY-4	
		NEXT ASSY	REQ	NEXT ASSY	REQ	NEXT ASSY	REQ	NEXT ASSY	REQ
-9	K13651							28W2016-201	1
-8	K13651							28W2016-200	1
-7	K13651			28W169-1	1	28W169-1	1	28W169-1	1
-6	K13651			28W169	1	28W169	1	28W169	1
-5	K11817	28W1691	1						
-4	K11817	28W169	1						
-3	K11817	28W1016	1	28W2016	1	28W2016-200	1		
28W164-2	K11817	28W1016-1	1	28W1016-1	1	28W1016-201	1		

-7	PBY-5	28W6011	1	
-6	PBY-5B		1	
-7	PBY-5A		1	
-6	PBY-5A		1	
-7	PBY-		1	
-6	PBY-	28W6011	1	

-8	AL28-3	28W169															
-7	AL28-3	28W169															
-7	PBY-5, 5A	28W169															
-6	PBY-5, 5A	28W169															
-9	AL28-3	28W3016															
-8	AL28-3	28W3016															
-9	PBY-5B	28W3016															
-8	PBY-5B	28W3016															
-9	PBY-5A	28W3016															
-8	PBY-5A	28W3016															
-7	PBY-5A	28W169															
-6	PBY-5A	28W169															
-5	XPBY-1	28W169-1															
-4	XPBY-1	28W169															
-3	XPBY-1	28W1016															
-2	XPBY-1	28W1016-1															

PART NO.	MODEL	NEXT ASSY.	REQ.	ST'D PARTS	LH REQ.	RH REQ.

REPLACES

REPLACED BY

LIMIT ON DIMENSIONS UNLESS OTHERWISE SPECIFIED ± .010

APPROVED [illegible] DATE 1-21-36

CALC. WT. 2.109 ACT. WT.

SCALE NOTED

AC

NAVY NOTED

MATERIAL

REQUIREMENTS PER AIRPLANE

MAT.

PARTS LIST PER ASSY.

C.W.P.E. [illegible] NMR 2

SPEC. [illegible] HEAT TREAT Z-P-GP FINISH

DRAFT CHECK ENGR. ENG.

CONSOLIDATED AIRCRAFT CORP. BUFFALO, N. Y.

STAMP PT. No. WHERE SHOWN

NAME ANGLE - WING - LEADING EDGE SPLICE UPPER

OPP. HAND NOTED

SIZE D DWG. 28W164

R 791M82

SUPPLIES & EQUIPMENT CLASSIFICATION			
LET	ALTERATION	DATE	BY
F	TRACED UP TO DATE	9-1-36	[illegible]
G	SPEC. WAS 4619 CHANGE "A" TO "F" [illegible]	2-25-37	S/HALL
H	RELOCATED G/H; 28W165-2 & -3		"
	FOR PBY-2 WAS 28W165 & -1, ADDED		"
	PBY-3 REQ'D.		"
I	"DIE NO AS NOTED" WAS "K11816"		"
J	ADDED "28W165-2 L.H. SHOWN &		"
	28W165-3 RH OPPOSITE		"
K	ADDED -.025 TOL. ON PBY-3 LEFT	11-2-40	[illegible]
L	TOLERANCE OF .035 ADDED FOR PBY'S	8-8-41	BRUNN

BAC. EQ. #269
BREWSTER EQ. EQ.69A

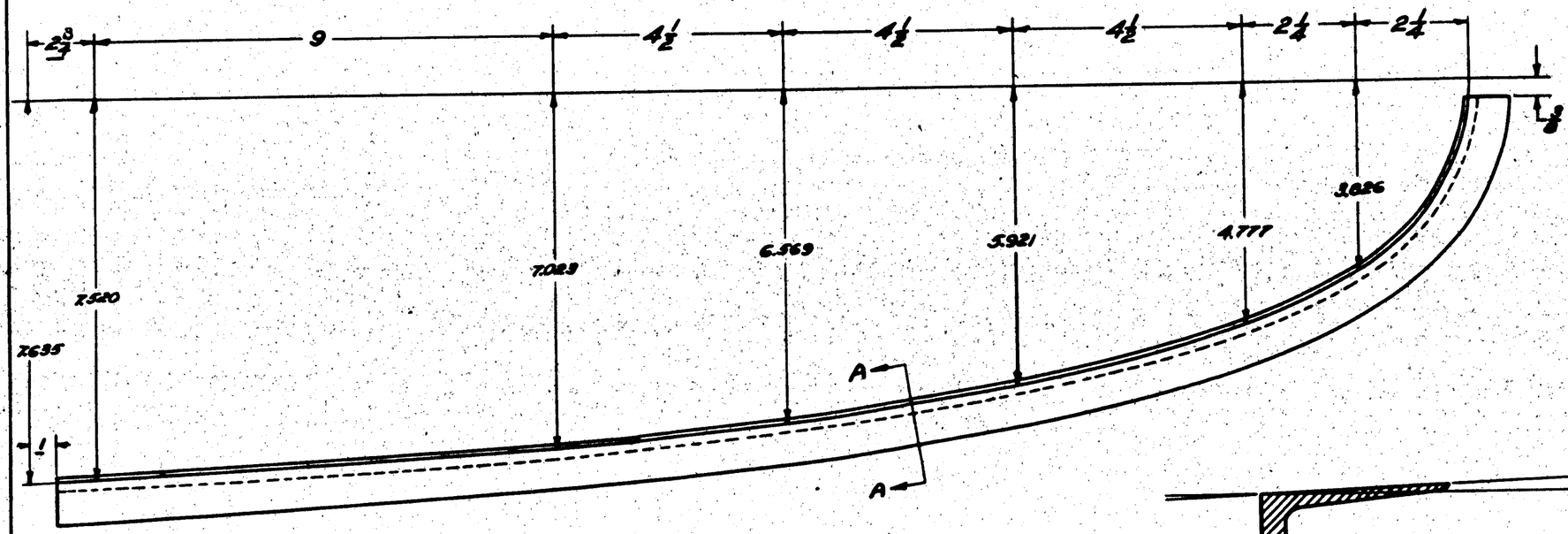

6" = 1 FT.

(I) MAKE FROM ALCOA DIE NO. AS NOTED
ALUM. ALLOY

28W165 L.H. SHOWN
28W165-1 R.H. OPPOSITE
28W165-2 L.H. SHOWN
28W165-3 R.H. OPPOSITE
(J)

(L) MINUS TOL. .025 ON XPBY-1
MINUS TOL. .035 ON PBY'S
(K) AFTER FORMING

NOTE: THIS SLOPE IS VARIABLE.
FORM TO FIT LEADING EDGE

SECTION A-A
FULL SIZE
BEND AS SHOWN

FINISH CODE	
Z	ANODIC TREATMENT
P	P-27 PRIMER
GP	GREEN PRIMER
C	CADMIUM PLATE

FINISH
Z-P-GP FOR PBY-1
Z-P-GP FOR PBY-2 & FUTURE

C10496 & T7713 {
C9187C-1-90, C8847C-1-82 {

-3	PBY-5B	28W169	1								
-2	AL28-5B	28W169	1 EA								
-3	AL28-5A	28W169	1 EA								
-2	PBY-5B	28W169	1								
-3	PBY-5, 5A	28W169	1 EA								
-2	PBY-5, 5A	28W169	1 EA								
-3	PBY-5, 5A	28W169	1 EA								
-2	PBY-3, 3A	28W165	1 EA								
-1	XPBY-1	28W169-1	1								
	XPBY-1	28W169	1								

O.M.	MODEL	NEXT ASSY.	REQ.	STD PARTS	LH REQ.	RH REQ.	PART NO.	LH REQ.	RH REQ.
REQUIREMENTS PER AIRPLANE				MAT.	PARTS LIST PER ASSY.				

-3	K13652			28W169-1	1						
-2	K13652			28W169	1						
-1	K11816	28W169-1	1								
28W165	K11816	28W169	1								
PART NO	MAKE FROM DIE NO.	NEXT ASSY	QTY	NEXT ASSY	QTY						
		PBY-1		PBY-2 & -3							
		MODEL									

(N)

C9187C-1-90 (ON)
C8847C-1-82 (ON)

-3	PBY-5	28W6011	1
-2	PBY-3		1
-3	PBY-3A		1
-2	PBY-3A		1
-3	PBY-5B		1
-2	PBY-5B	28W6011	1

REPLACES
REPLACED BY
LIMIT ON DIMENSIONS UNLESS OTHERWISE SPECIFIED ± .010
APPROVED [illegible] 12-21-36 DATE
CALC. WT. 1.3 ACT. WT.
SCALE NOTED
AC
NAVY NOTED
MATERIAL
(CAST) CONDAY ALLOY 24S0 — HEAT TREAT — SEE AFTER FORMING — FINISH NOTED
CONSOLIDATED AIRCRAFT CORP. BUFFALO, N.Y.
STAMP PT. No. WHERE SHOWN
NAME ANGLE-WING-LEADING EDGE SPLICE-LOWER-OUTER
C. INSP. [illegible] ASSY. [illegible]
DATE 12-21-36
DRAFT CHECK EXAM. ENG.
OPP. HAND 28W165-1
SIZE D
DWG. 28W165
R 28W165

SUPPLIES & EQUIPMENT CLASSIFICATION			
LET	ALTERATION	DATE	BY
F	TRACED UP TO DATE	9-1-36	[redacted]
G	SPEC. WAS 4649 CHANGE TO [redacted] RECEIVED	2-25-37	SWELL
H	RELOCATED 5/M, 28W165-2 & -3		"
	ADD PBY-2 WAS 28W165 & -1, ADDED PBY-3 RQTS.		"
I	"DIE NO AS NOTED" WAS "KII816"		"
J	ADDED "28W165-2 L.H. SHOWN & 28W165-3 R.H. OPPOSITE		"
K	ADDED -.015 TOL. OMITTED TOL. LETS	11-12-36	[redacted]
L	TOLERANCE OF .035 ADDED PART PBY5	11-6-41	[redacted]

BAC. EQ. #269
BREWSTER EQ. #69

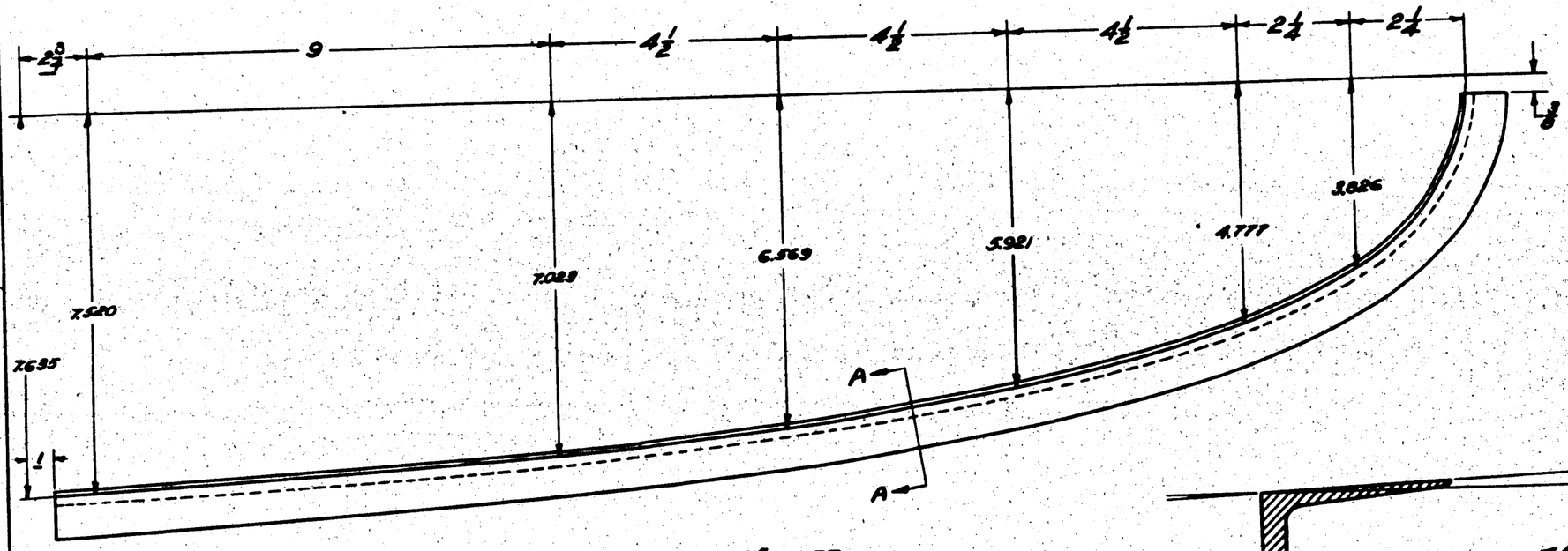

6" = 1 FT.

MAKE FROM ALCOA DIE NO. AS NOTED
ALUM. ALLOY

28W165 L.H. SHOWN
28W165-1 R.H. OPPOSITE
28W165-2 L.H. SHOWN
28W165-3 R.H. OPPOSITE

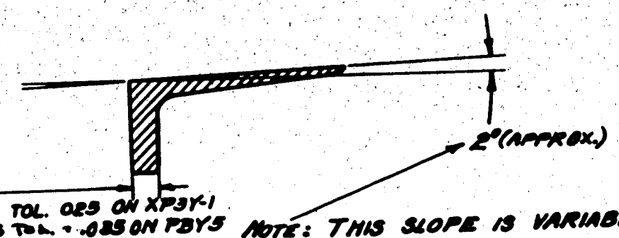

(L) MINUS TOL. .025 ON XPBY-1
MINUS TOL. -.035 ON PBY-5
(K) AFTER FORMING

NOTE: THIS SLOPE IS VARIABLE. FORM TO FIT LEADING EDGE

SECTION A-A
FULL SIZE
BEND AS SHOWN

FINISH
Z-P-GP FOR PBY-1
Z-P-GP FOR PBY-2 & FUTURE

FINISH CODE	
Z	ANODIC TREATMENT
P	P-27 PRIMER
GP	GREEN PRIMER
C	CADMIUM PLATE

C10496 & T7713
C9187C-1-2-90, C8847C-1-2-82

-3	PBY-5B	28W169	1
-2	ALL 28-5B	28W169	1 EA
-3	ALL 28-5B	28W169	1 EA
-2	PBY-5B	28W169	1
-3	PBY-5,5A	28W169	1 EA
-2	PBY-5,5A	28W169	1 EA
-3	PBY-5,5A	28W169	1 EA
-2	PBY-5,5A	28W169	1 EA
-1	XPBY-1	28W169-1	1
	XPBY-1	28W169	1

-3	K13652			28W169-1	1	
-2	K13652			28W169	1	
-1	K11816	28W169-1	1			
28W165	K11816	28W169	1			
PART NO.	MAKE FROM DIE NO.	NEXT ASSY	QTY	NEXT ASSY	QTY
		PBY-1		PBY-2 & 3	
		MODEL			

(N)

-3	PBY-3	28W6011	1
-2	PBY-3		1
-3	PBY-3A		1
-2	PBY-3A		1
-3	PBY-5B		1
-2	PBY-5B	28W6011	1

C9187C-9140N
C8847C-5540N

REPLACES	
REPLACED BY	
LIMIT ON DIMENSIONS UNLESS OTHERWISE SPECIFIED	± .010

APPROVED E.M.W. 4-21-36 DATE
CALC. WT. 1.13 ACT. WT.
SCALE NOTED
AC
NAVY NOTED
MATERIAL: ALCOA CONAY ALLOY 24S0 .025 AFTER FORMING
HEAT TREAT
FINISH: NOTED

CONSOLIDATED AIRCRAFT CORP. BUFFALO, N.Y.
STAMP PT. No. WHERE SHOWN

NAME: ANGLE - WING - LEADING EDGE SPLICE - LOWER - OUTER
SIZE D
DRAWING No. 28W165
OPP. HAND 28W165-1

O.H.	MODEL	NEXT ASSY.	REQ.	STD PARTS	LH REQ.	RH REQ.	PART NO.	LH REQ.	RH REQ.	PARTS LIST PER ASSY.	
REQUIREMENTS PER AIRPLANE				MAT.						CHKD.	
										DRAFT	CHECK
										ENGR.	ENG.

28W165
R

SUPPLIES & EQUIPMENT CLASSIFICATION			
LET	ALTERATION	DATE	BY
D	TRACED	11-6-36	[redacted]
E	SPEC. WAS 4A19 COND'T ALCLAD SHT. PER MIL-A-9962 AMENDMENT	2-25-37	SMALL
F	FOR PBY-1, PBY-2, PBY-3 K13652		
	WAS K11B16, ADD PBY-3 & 4 REQ'TS	1-17-38	[redacted]
	AL WAS AKU.		

SECTION A-A
12" - 1 FT.

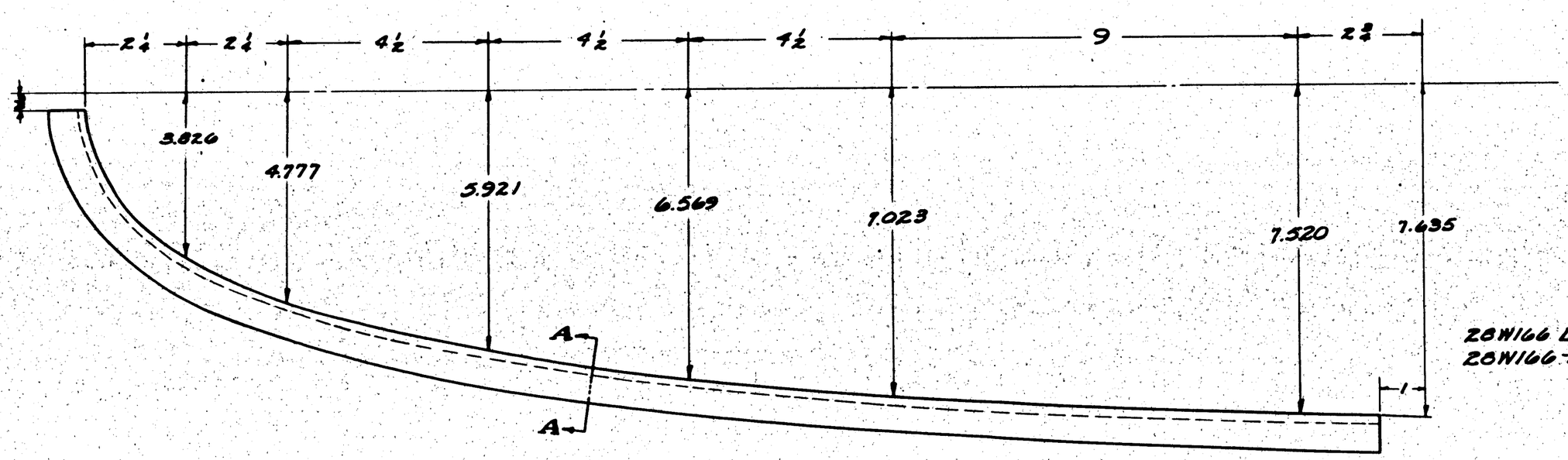

6" - 1 FT.

28W166 L.H. SHOWN
28W166-1 R.H. OPPOSITE

GP-6ARTN PRIME
[redacted]

(F)

MAKE FROM ALCOA "K13652
ALUM. ALLOY.

FINISH
1-P-[redacted] GP
2-P-[redacted] FOR PBY-1
FOR PBY-2 & FUTURE.

(F)

-R	PBY-5A1B	28W5016	1EA.
-L	PBY-5A2B	28W5016	1EA.
-1	PBY-4	28W2016-201	
	PBY-4	28W2016-200	
-1	PBY-5	28W2016-201	
	PBY-5	28W2016-200	
-1	PBY-2	28W2016-1	
	PBY-2	28W2016	
-1	PBY-1	28W0167	
	PBY-1	28W016	
-1	XPBY-1	28W016-1	
	XPBY-1	28W016	

O.H.	MODEL	NEXT ASSY.	REQ.	ST'D PARTS	LH REQ.	RH REQ.	PART NO.	LH REQ.	RH REQ.

REQUIREMENTS PER AIRPLANE — PARTS LIST PER ASSY.

REPLACES	
REPLACED BY	
LIMIT ON DIMENSIONS UNLESS OTHERWISE SPECIFIED	± .010
[redacted]	

APPROVED [redacted]	10-6-36 DATE
CALC. WT. [redacted] ACT. WT.	
SCALE NOTED	
AC	
NAVY NOTED	
MATERIAL	4SA T (Alclad) AMS 4038 HEAT TREAT AFTER FORMING
SPEC.	HEAT TREAT

(F) NOTED — FINISH

MAT. (D) ✓

CHK'D	[redacted]	HAND	L
6-27-36	6-10-36		
DRAFT	CHECK	EXAM.	ENG.

CONSOLIDATED AIRCRAFT CORP. BUFFALO, N.Y.

STAMP PT. No. WHERE SHOWN

NAME ANGLE - WING - LEADING EDGE SPLICE - LOWER - INNER.

OPP. HAND 28W166-1

SIZE D — 28W166

LET	ALTERATION	DATE	BY
	SUPPLIES & EQUIPMENT CLASSIFICATION		
D	TRACED TO DATE	10-6-36	
E	11/64 WAS 9/64 DIM. WT. CHG. NEG.	3-26-41	
F	REMOVED DIMS 5/16 & 7/32. ADDED DIM 3/8 & BEVELED CUTOUT 2 WAS 2 1/4 WT. CHG. NEG.	7-17-43	
G	1/8 R WAS 1/16 R (5 PLACES) 9/16 WAS 1/2 (4 PLACES) WT. CHG. NEG.	7-17-43	

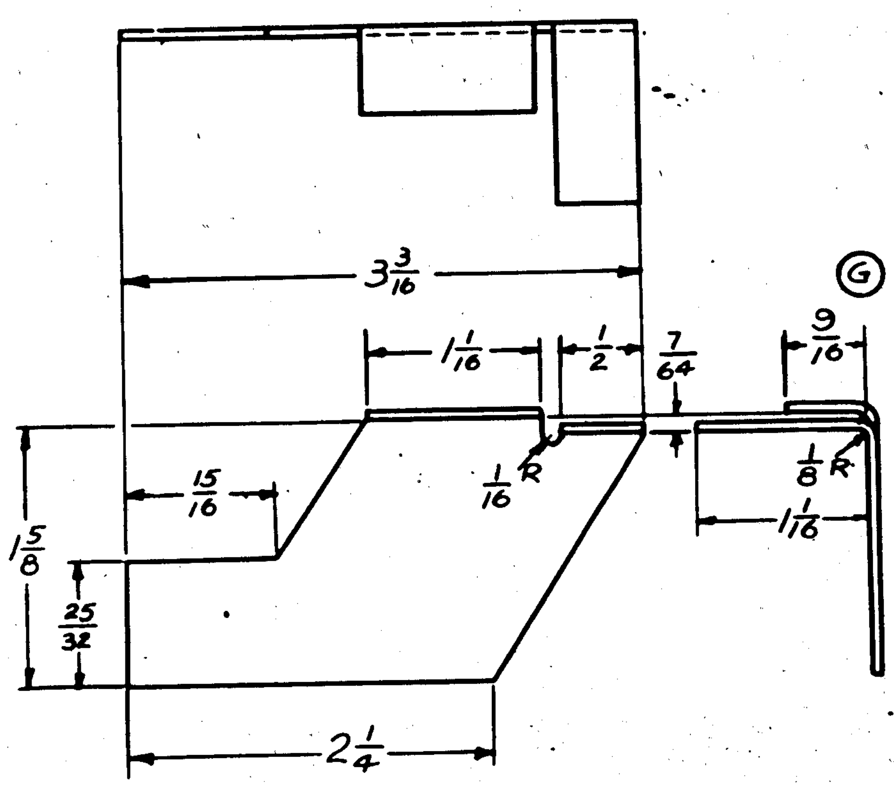

(-2) L.H. SHOWN
(-3) R.H. OPPOSITE
SCALE-FULL SIZE

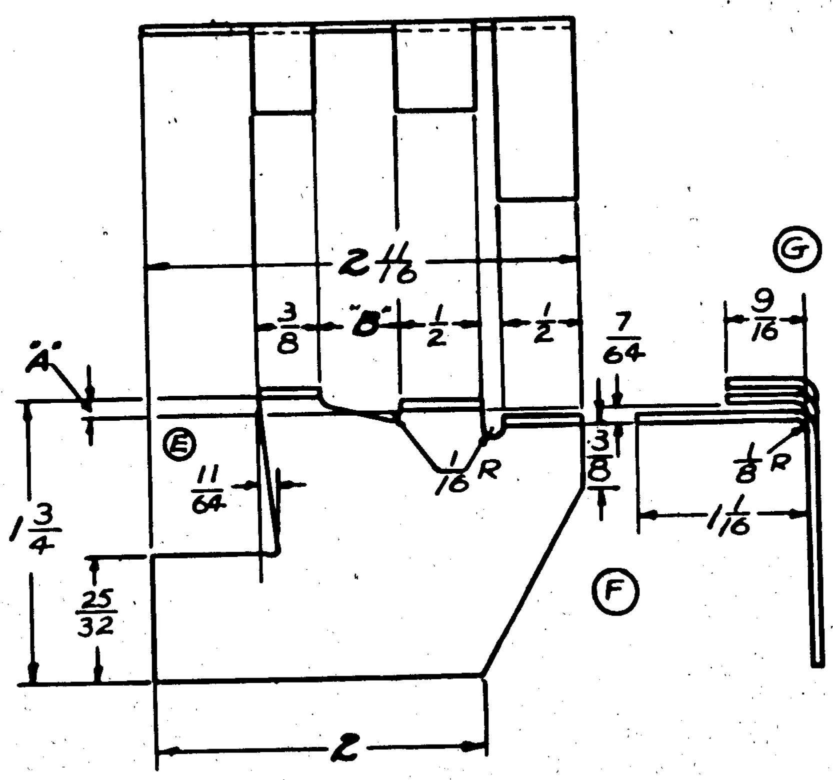

(-4) L.H. SHOWN "A" = 3/64 "B" = 1/4
(-5) R.H. OPPOSITE "A" = 3/64 "B" = 1/4
(-6) L.H. SHOWN "A" = 3/32 "B" = 1/2
(-7) R.H. OPPOSITE "A" = 3/32 "B" = 1/2
(-16) L.H. SHOWN "A" = 3/64 "B" = 1/2
(-17) R.H. OPPOSITE "A" = 3/64 "B" = 1/2
SCALE 12" = 1'-0"

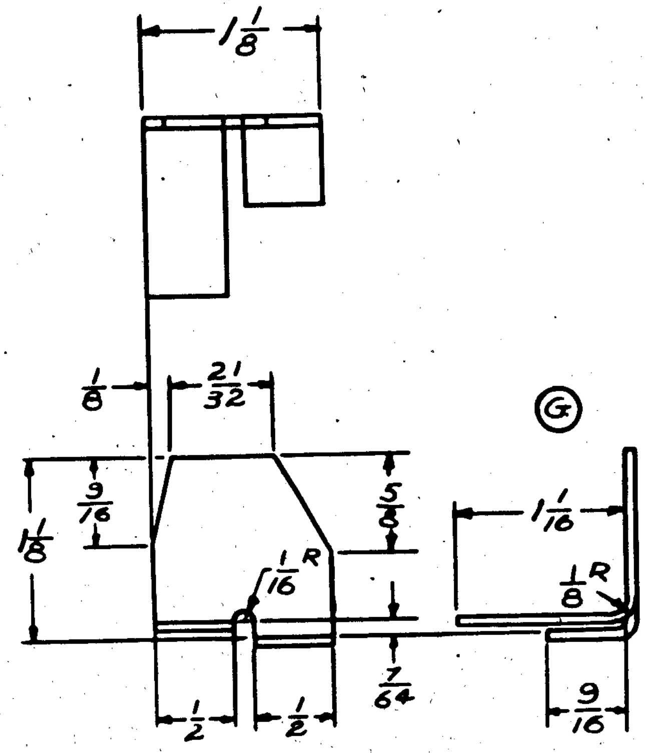

(-10) L.H. SHOWN
(-11) R.H. OPPOSITE
SCALE-FULL SIZE

GP-GREEN PRIME

FINISH CODE	
Z	ANODIC TREATMENT
P	P-27 PRIMER
AP	ALUMINIZED PRIMER
C	CADMIUM PLATE

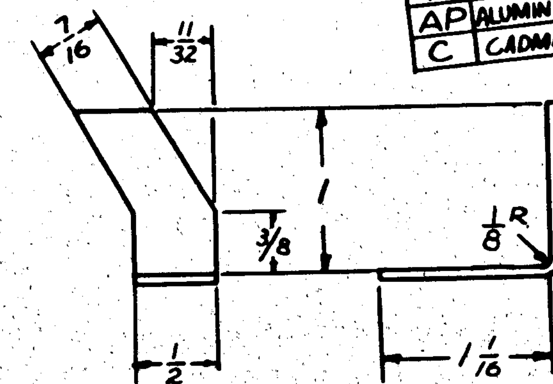

(12) L.H. SHOWN
(13) R.H. OPPOSITE
SCALE-FULL SIZE

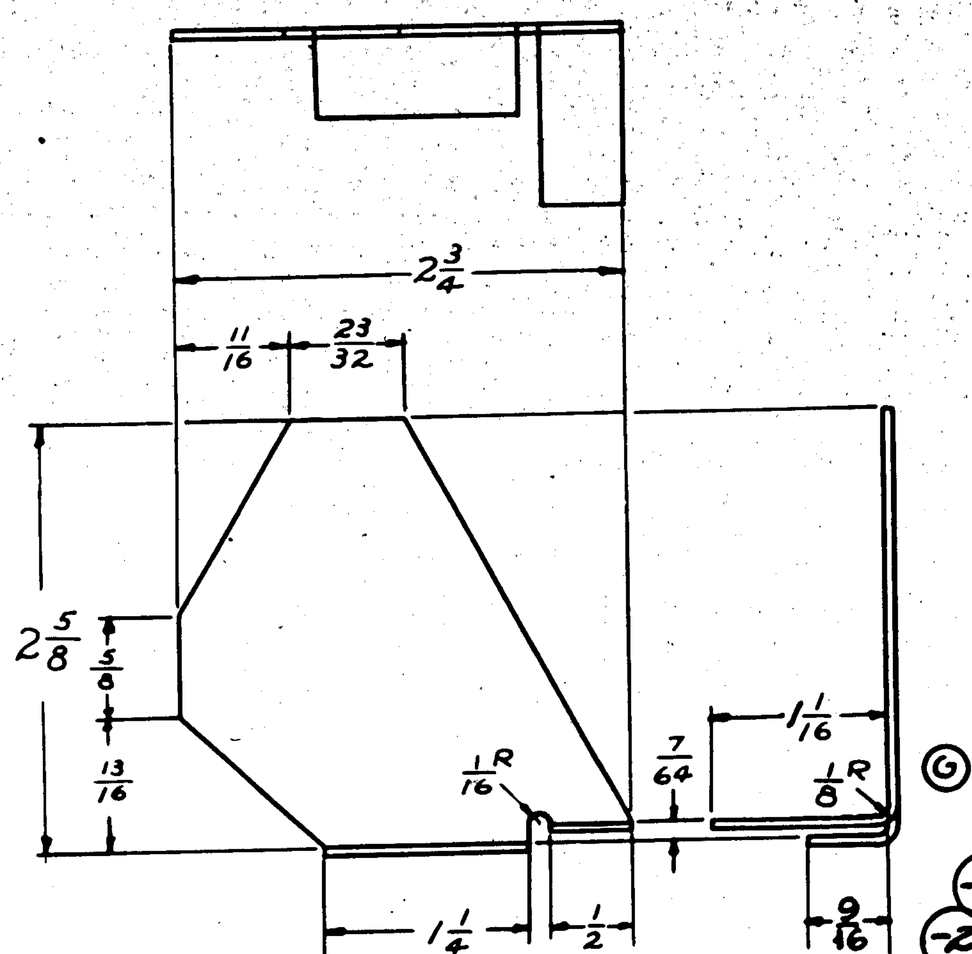

G

(-8) L.H. SHOWN
(-9) R.H. OPPOSITE
SCALE-FULL SIZE

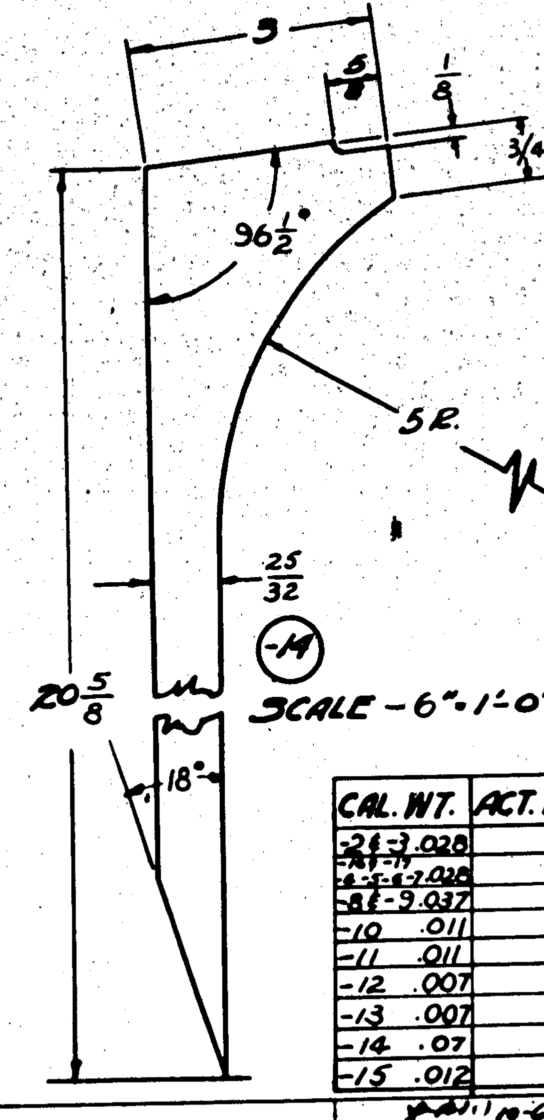

(-14)
SCALE - 6" = 1'-0"

FINISH:
Z-P-GP-FOR PBY-1
Z-P-GP-FOR PBY-2 & FUTURE

(-16)(-17)(-2)(-3)(-4)(-5)(-6)(-7)(-8)(-9)(-10)(-11)(-12)(-13)
.064 AL. ALLOY SHEET-SPEC. 47A10
(CONDITION A) ALLOY 24A
H.T. BUR. AER. SR53a

(-14)
.064 AL. ALLOY SHEET SPEC. 47A10
(CONDITION T) ALLOY 24-T.

CAL. WT.		ACT. WT.
-2 & -3	.028	
-4 & -5-6-7 (-16-17)	.028	
-8 & -9	.037	
-10	.011	
-11	.011	
-12	.007	
-13	.007	
-14	.07	
-15	.012	

O.H.	MODEL	NEXT ASSY.	REQ.
-17	ALL 28-5s	28W2016	2
-16			2
-13			1
-12			1
-11			1
-10			1
-9			12
-8			12
-7			6
-6			6
-3			4
-2	ALL 28-5s		4
-17	PBY-5-5A&5B		2
-16			2
-13			1
-12			1
-11			1
-10			1
-9			12
-8			12
-7			6
-6			6
-3			4
-2	PBY-5-5A&5B		4
	PBY4	28W2016-201	
	PBY4	28W2016-200	
	PBY-3	28W2016-201	
	PBY-3	28W2016-200	
	PBY-2	28W2016-1	
	PBY-2	28W2016	
	PBY-1	28W016-1	
	PBY-1	28W016	
	XP3Y-1	28W016-1	
	XP3Y-1	28W016	
REQUIREMENTS PER AIRPLANE			

ST'D PARTS	LH REQ.	RH REQ.	PART NO.	LH REQ.	RH REQ.
MAT.	PARTS LIST PER ASSY.				

REPLACES
REPLACED BY
LIMIT ON DIMENSIONS UNLESS OTHERWISE SPECIFIED + −

[redacted]

APPROVED 10-6-36 DATE
CALC. WT. KRA ACT. WT.
SCALE NOTED
AC
NAVY NOTED
MATERIAL

NOTED	NOTED	NOTED
SPEC.	HEAT TREAT	FINISH

[illegible]		KRA	L
7-28-33	10-10-36		
DRAFT	CHECK	EXAM.	ENG.

OPP. HAND NOTED

CONSOLIDATED AIRCRAFT CORP. BUFFALO, N.Y.
STAMP PT. No. WHERE SHOWN

NAME GUSSETS & SPACER-WING-OUTER CENTER SECTION LEADING EDGE.

DWG. D SIZE 28W174

R 28W174

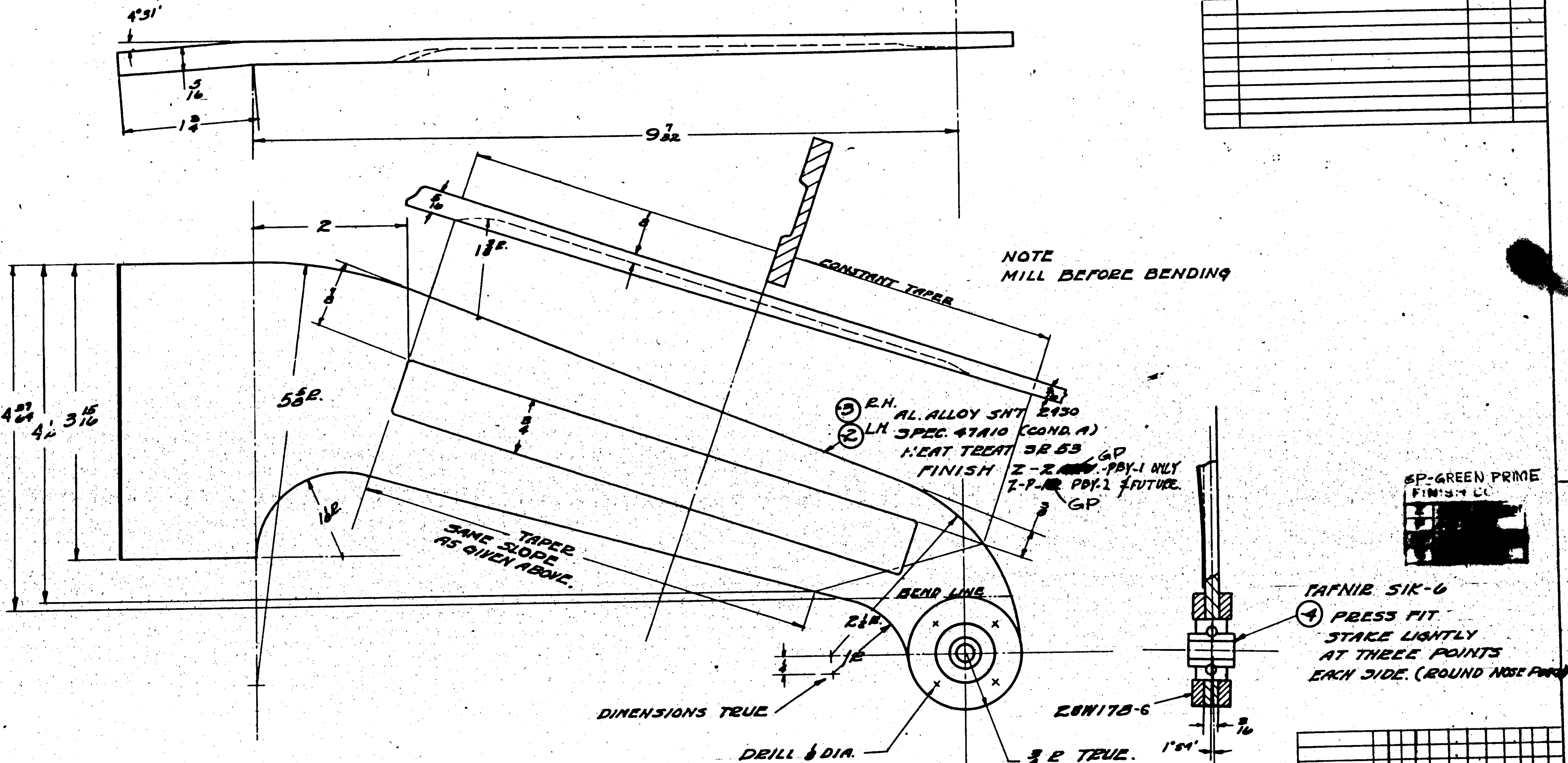

SUPPLIES & EQUIPMENT CLASSIFICATION			
LET	ALTERATION	DATE	BY
D	TRACED TO DATE	10-6-36	[illegible]
E	CHANGED 28W178 TO 28W178-6 NO WT CHANGE	7-9-42	[illegible]

-L -R	28-5MMN	28W021	1 EA
-L -R	28-5AMC	28W021	1 EA
-L -R	28-5ME,MN	28W021	1 EA
-L -R	28-5MA,MC	28W021	1 EA
-L -R	PBY-5A	28W021	1 EA
-L -R	PBY-5,5B	28W021	1 EA

O.H.	MODEL	NEXT ASSY.	REQ.
-1	PBY-4	28W021-1	
	PBY-4	28W021	
-1	PBY-3	28W021-1	
	PBY-3	28W021	
-1	PBY-2	28W021-1	
	PBY-2	28W021	
-1	PBY-1	28W021-1	
	PBY-1	28W021	
-1	XP3Y-1	28W021-1	
	XP3Y-1	28W021	

REQUIREMENTS PER AIRPLANE

PART NO						
AC 425-D4	4	4	4	4	4	4
28W178-6	2	2	2	2	2	2
-4	1	1	1	1	1	1
-3		1		1		1
28W176-2	1		1		1	

MAT. | PARTS LIST PER ASSY.

REPLACES

REPLACED BY

LIMIT ON DIMENSIONS UNLESS OTHERWISE SPECIFIED ± .010

[redacted]

APPROVED [redacted] -6-36 DATE

CALC. WT. .100 LBS. | ACT. WT.

SCALE FULL SIZE

AC

NAVY NOTED | NOTED | NOTED | NOTED

MATERIAL | SPEC. | HEAT TREAT | FINISH

DRAFT [illegible] 7-31-36 | CHECK 10-6-36 | EXAM. 8-3-36 | ENG. L

CONSOLIDATED AIRCRAFT CORP. BUFFALO, N.Y.

STAMP PT. No. WHERE SHOWN

NAME HINGE - WING - AILERON STA. #7

OPP. HAND 28W176-1

SIZE D 28W176

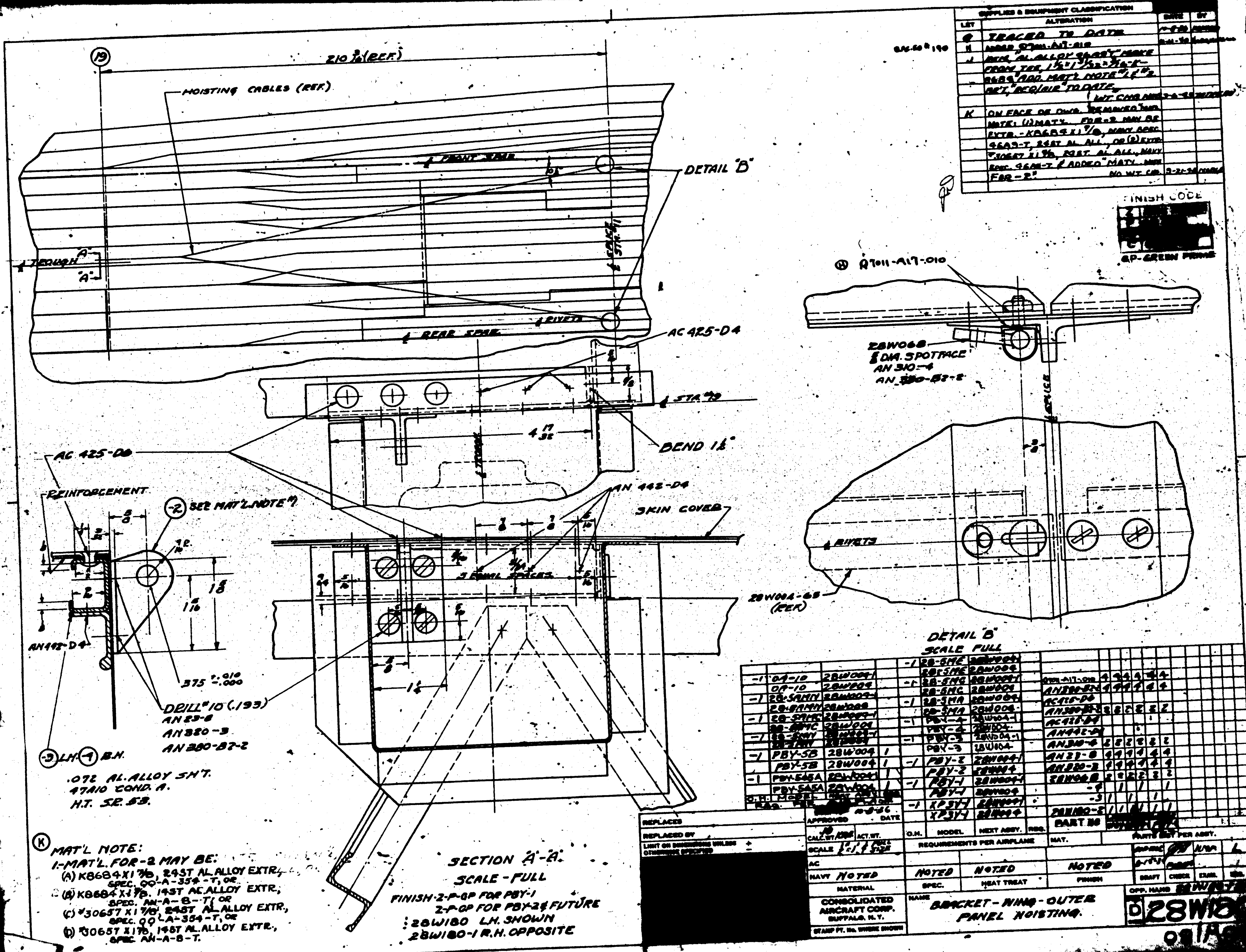
SUPPLIES & EQUIPMENT CLASSIFICATION
LET | ALTERATION | DATE | BY
G TRACED TO DATE
H ADDED Q7011-A17-010
J ...AL. ALLOY 24 ST MAKE FROM TEE, 1 5/8 x 1 3/32 x 3/16 ... ADD. MAT'L NOTE #1 & #2 ... TO DATE
WT. CHG.
K ON FACE OF DWG. REMOVED MAT'L NOTE: (1) MAT'L FOR -2 MAY BE EXTR. - K8689 X 1 7/8, NAVY SPEC. 46A9-T, 24ST AL. ALL., OR (2) EXTR. #30657 X 1 7/8, 24ST AL. ALL., NAVY SPEC. 46A9-T & ADDED "MAT'L NOTE FOR -2".
NO WT. CHG.
FINISH CODE
GP-GREEN PRIME
19
210 1/16 (REF.)
HOISTING CABLES (REF.)
FRONT SPAR
DETAIL "B"
TROUGH
"A"
"A"
SPLICE STA. #11
RIVETS
REAR SPAR
AC 425-D4
STA. #9
4 17/32
BEND 1 1/2°
AC 425-D6
AN 442-D4
SKIN COVER
REINFORCEMENT
-2 SEE MAT'L NOTE #1
AN442-D4
375 +.010 -.000
DRILL #10 (.193)
AN 23-8
AN 320-3
AN 380-B2-2
-3 LH. -4 R.H.
.072 AL. ALLOY SH'T.
47A10 COND. A.
H.T. SP. 53.
5 EQUAL SPACES
28W004-63 (REF.)
Q7011-A17-010
28W068
5/8 DIA. SPOTFACE
AN 310-4
AN 380-B2-2
SPLICE
DETAIL "B"
SCALE FULL
K MAT'L NOTE:
1-MAT'L. FOR -2 MAY BE:
(A) K8684 X 1 7/8, 24ST AL. ALLOY EXTR., SPEC. QQ-A-354-T, OR
(B) K8684 X 1 7/8, 14ST AL. ALLOY EXTR., SPEC. AN-A-8-T, OR
(C) #30657 X 1 7/8, 24ST AL. ALLOY EXTR., SPEC. QQ-A-354-T, OR
(D) #30657 X 1 7/8, 14ST AL. ALLOY EXTR., SPEC. AN-A-8-T.
SECTION "A"-"A"
SCALE - FULL
FINISH - 2-P-GP FOR PBY-1
2-P-GP FOR PBY-2 & FUTURE
28W180 LH. SHOWN
28W180-1 R.H. OPPOSITE
-1 OA-10 28W004-1
OA-10 28W004
-1 28-5AMN 28W004-1
28-5AMN 28W004
-1 PBY-5B 28W004 1
PBY-5B 28W004 1
-1 PBY-5A5A 28W004-1 1
PBY-5A5A 28W004 1
-1 28-5ME 28W004-1
28-5ME 28W004
-1 28-5MC 28W004-1
28-5MC 28W004
-1 28-5MA 28W004-1
28-5MA 28W004
-1 PBY-4 28W004-1
PBY-4 28W004
-1 PBY-3 28W004-1
PBY-3 28W004
-1 PBY-2 28W004-1
PBY-2 28W004
-1 PBY-1 28W004-1
PBY-1 28W004
-1 XP3Y-1 28W004-1
XP3Y-1 28W004
O.H. MODEL NEXT ASSY. REQ.
REQUIREMENTS PER AIRPLANE
Q7011-A17-010 4 4 4 4 4 4
AC425-D6
AC425-D4
AN442-D4
AN310-4 2 2 2 2 2 2
AN23-8 4 4 4 4 4 4
AN320-3 4 4 4 4 4 4
28W068 2 2 2 2 2 2
28W180-2
PART NO.
MAT.
PARTS LIST PER ASSY.
REPLACES
REPLACED BY
LIMIT ON DIMENSIONS UNLESS OTHERWISE SPECIFIED +
[redacted]
APPROVED 10-8-36 DATE
CALC. WT. ACT. WT.
SCALE 1/2" = 1", FULL SIZE
AC
NAVY NOTED
MATERIAL
NOTED SPEC.
NOTED HEAT TREAT
NOTED FINISH
DRAFT CHECK EXAM.
OPP. HAND
CONSOLIDATED AIRCRAFT CORP. BUFFALO, N.Y.
STAMP PT. No. WHERE SHOWN
NAME BRACKET - WING - OUTER PANEL HOISTING.
D 28W180

SUPPLIES & EQUIPMENT CLASSIFICATION			
LET	ALTERATION	DATE	BY
B	TRACED TO DATE	10-8-36	[redacted]
C	ADDED -5, 1 REQ. TO DWG. & B.M.	10-17-36	[redacted]

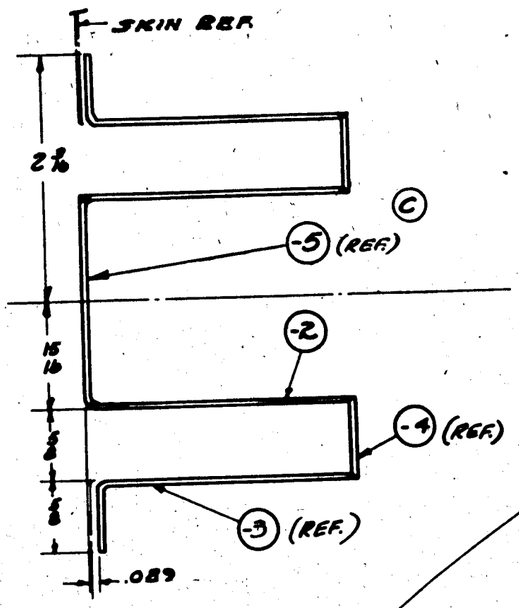

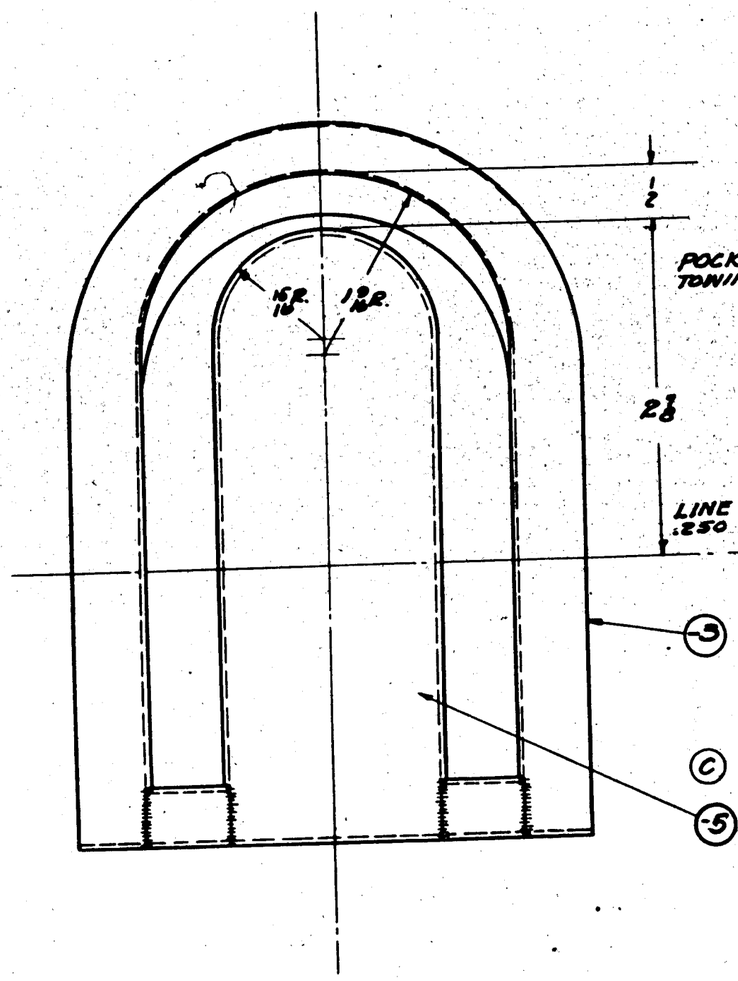

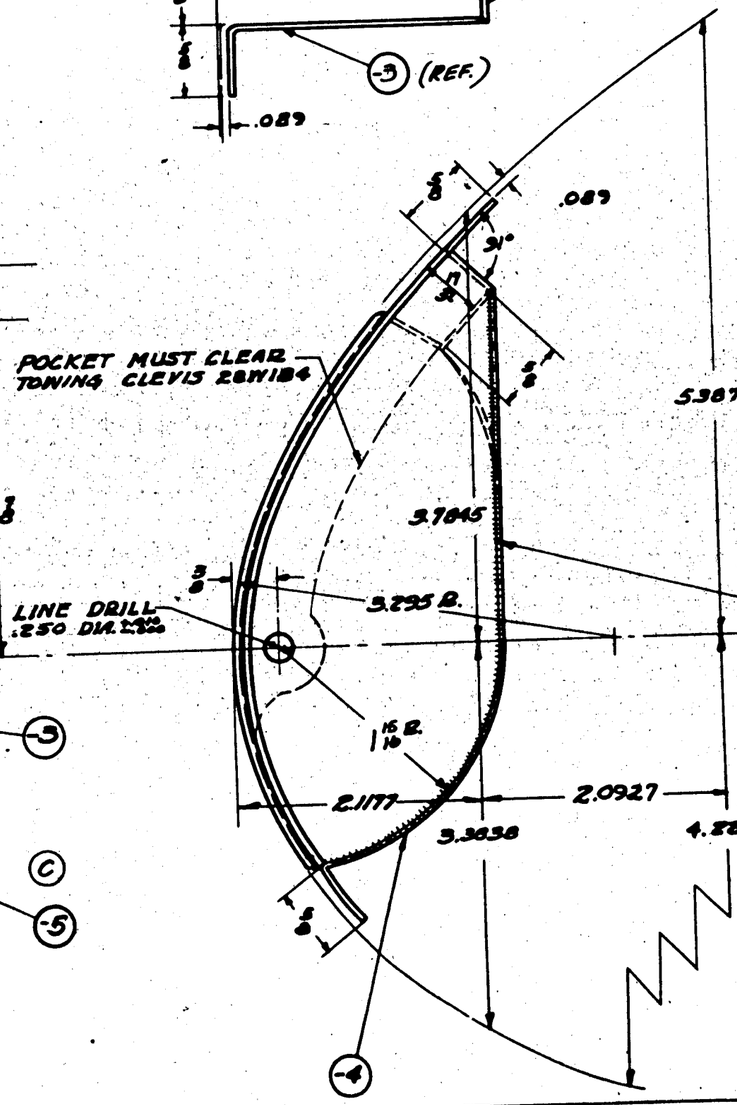

C70496 & 77713
C91876 #1-30
C88476 #1-#32
C91876 #91 & 0W
C88476 #53 & 0W

NOTE
1/16 RADIUS UNLESS OTHERWISE NOTED

GP GREEN PRIME FINISH CODE

FINISH
Z-P-[redacted] GP FOR PBY-1
Z-P-[redacted] GP FOR PBY-2 & FUTURE

	ALL 28-5's	28W169	2	
	PBY-5 6A	28W169	2	
	PBY-5 5A	28W169	2	
	PBY-5B	28W6011	2	
	PBY-5	28W6011	2	
	PBY-5A	28W6011	2	
	PBY-4	28W169-1		
	PBY-4	28W169		
	PBY-3	28W169-1		
	PBY-3	28W169		
	PBY-2	28W169-1		
	PBY-2	28W169		
	PBY-1	28W169	-5	1
	PBY-1	28W169	-4	1
	PBY-1	28W169	-3	1
	PBY-1	28W169-1	28W185-2	1
	PBY-1	28W169	PART NO.	[illegible]

O.H.	MODEL	NEXT ASSY.	REQ.	MAT.	PARTS LIST PER ASSY.	
REQUIREMENTS PER AIRPLANE						
VENDOR'S DWG. & SPEC. NO.						
47A2	NONE		NOTED.			
SPEC.	HEAT TREAT		FINISH	DRAFT	CHECK	EXAM.

REPLACES

REPLACED BY

LIMIT ON DIMENSIONS UNLESS OTHERWISE SPECIFIED ± .010

[redacted] 10-8-36
APPROVED DATE

.347 CALC. WT. .404 ACT. WT.

SCALE FULL SIZE

AC

HAVY. 040 ALCLAD 24S

MATERIAL

CONSOLIDATED AIRCRAFT CORP. BUFFALO, N. Y.

STAMP PT. No. WHERE SHOWN

NAME POCKET WING TOWING CLEVIS - STR. 4 IN L.E.

OPP. HAND

SIZE D

28W185

LET	ALTERATION	DATE	BY
D	TRACED	4-27-37	CLARK
E	DIM. 2 1/4 +3/64 -1/64 WAS 2 1/4 ± .015. NEG. W.T. CH'G.	4-442	BRAVER-MAN
F	REMOVED 1/8 R, 2 1/4 & 1 5/8 DIM. REMOVED. SLOT & 3/8 R, 1/32 & 1 5/16 DIM. CHANGED 1/8 R TO 1/4 R, 1/16 TO 1/4 R, 3/16 TO 3/8, 3/4 TO 11/16, 11/16 TO 5/8, 8 TO 9/16, MOVED CENTER OF 1 3/4 R. ADDED 1/4 R & 1/2 R. ADDED FULL RADIUS. N.C. CHANGE NEG 6 11-42 THUSSEL		
G	REMOVED 3/4 DIM., TOLERANCE OF 2 1/4, & REF. ON 3/4. CHANGED TOLERANCE IN B/M FROM ± .015 TO +3/64 -1/64. REMVD DIMS 1 7/8 (5) ADD B/M'S 4 3/16, 5 9/16, 6 15/16, 8 5/16. WT. CH. NEG.	2-26-43	KINGITT
H	ON FACE REPLACED SPEC. "M-277" WITH "QQ-A-367 GR. 5" NO WT. CH'G	6-15-43	LUMSDEN FOSTER

SUPPLIES & EQUIPMENT CLASSIFICATION

EO A23229

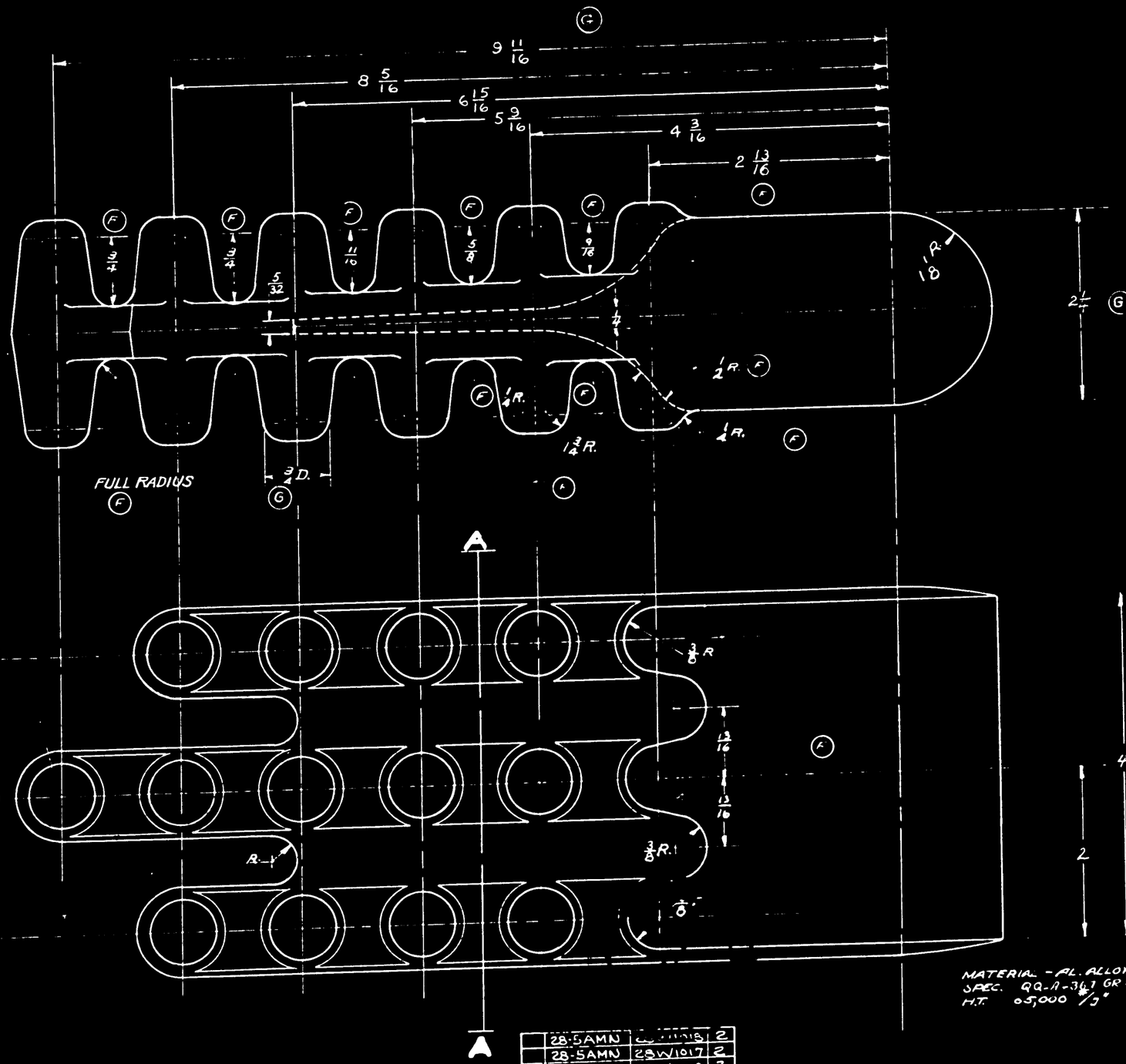

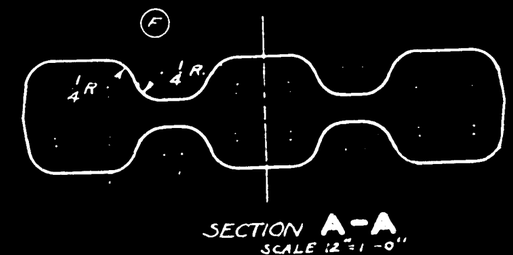

SECTION A-A
SCALE 12"=1'-0"

BREAK CORNERS WITH 1/16 RAD. UNLESS OTHERWISE NOTED

DRAFT ANGLES TO BE 7°

MATERIAL - AL. ALLOY FORGING 14S
SPEC. QQ-A-367 GR 5. (H)
H.T. 65,000 #/□"

28-5AMN	28W1018	2
28-5AMN	28W1017	2
28-5MN	28W1018	2
28-5MN	28W1017	2
28-5AMC	28W1018	2
28-5AMC	28W1017	2
28-5MC	28W1018	2
28-5MC	28W1017	2
28-5ME	28W1018	2
28-5ME	28W1017	2
28-5MA	28W1018	2
28-5MA	28W1017	2
PBY-5B	28W1018	2
PBY-5B	28W1017	2
PBY-5A	28W1018	2
PBY-5A	28W1017	2
PBY-5	28W1018	2
PBY-5	28W1017	2

O.H.	MODEL	NEXT ASSY	REQ. PER A'PLANE
PBY-4	28W1017		
PBY-4	28W1018		
PBY-3	28W1017		
PBY-3	28W1018		
PBY-2	28W1017		
PBY-2	28W1018		
PBY-1	28W1017		
PBY-1	28W1018		

REPLACES
REPLACED BY
LIMIT ON DIMENSIONS UNLESS OTHERWISE SPECIFIED ± 3/64 -1/64

APPROVED 4-27-37 DATE
SEE N.A. ACT WT
SCALE 12"=1'-0" AC
NAVY NOTED MATERIAL

LH REQ.	RH REQ.	PART NO.	TH REQ.	RH REQ.

O.H.	MODEL	NEXT ASSY	REQ.	ST'D PARTS	PARTS LIST PER ASSY.
REQUIREMENTS PER AIRPLANE				MAT	

Drawn: Thurber Fuller 9-13-35 Check: 5-11-37

NOTED	NOTED	NONE
SPEC.	HEAT TREAT	FINISH

DRAFT | CHECK | EXAM | ENG.

CONSOLIDATED AIRCRAFT CORP. BUFFALO, N.Y.

STAMP PT. No. WHERE SHOWN

NAME FORGING - WING BRACE STRUT FITTING - UPPER

OPP HAND

ORG D SIZE

28W1010

LET	ALTERATION	DATE	BY
M	REDRAWN & REDESIGNED TO INCORPORATE FORGING OF TWO PIECES IN ONE DIE.	9-[illegible]-42	[illegible]
N	SECTION D-D = 1/16 MAXIMUM RADII WAS 1/64. BLEND R. FROM 1/16 TO 1/4 WAS 1/64 TO +. SECTION C-C = 1/16 R. MAX. WAS 1/64 R. MAX. WT. CHG. NEG.	3-10-43	STEELE
P	IN SEC. D-D. "1/64 MAXIMUM RADII" WAS "1/16 MAXIMUM RADII" & NOTE "BLEND RADII FROM 1/64 TO 1/4" WAS "BLEND RADII FROM 1/16 TO 1/4" IN SEC. C-C. "1/64 R MAX." WAS "1/16 R. MAX." WT CHG NEG	8-7-43	Pollitt
Q	IN SEC D-D. "1/16 MAXIMUM RADII" WAS "1/64 MAXIMUM RADII" & NOTE "BLEND RADII FROM 1/16 TO 1/4" WAS "BLEND RADII FROM 1/64 TO 1/4" IN SEC C-C "1/16 R. MAX." WAS "1/64 R. MAX." WT CHG NEG	10-2-43	LARSEN

EQ # A88296

BLEND RADII FROM 1/16 TO 1/4 (P)(Q)

BLEND RADII FROM 3/8 AT SECT. B-B TO 1/8 AT SECT. A-A

BLEND RADII FROM 1/16 TO 3/8 AT SECT. B-B

1/16 MAXIMUM RADII (N)(P)(Q)

1/8 R (REF.)

1 3/32 (REF.)

3/32 (REF.)

(REF.) 1 3/32

1 3/32

9/64

1/4 R.

3/8 R.

THESE SURFACES TO BE SMOOTH & WITHOUT DRAFT

SECTION D-D

39 1/4° (REF.)

1/16 R. MAX.

(Q)(P)(N)

SECTION C-C

39 1/4° (REF.)

1/8 R.

3/8 R. (REF.)

SECTION B-B

45°

39 1/4°

17/64

1/2

45°

13/32 R.

39 1/4°

1.07

1/16 R.

3/8 R.

1.07

PARTING LINE

D

D

1 11/32

SYM.

1 3/32

3/32

3/8

B

A

C

C

B

A

23/32

1/16

4 31/32

9 15/16

1/4 R.

1/8 R.

1/4 R.

3/8 R.

3/16 SAW CUT

45° (REF.)

13/32 R (REF.)

1.07 (REF.)

47/64 (REF.)

1/8 R.

SECTION A-A

NOTE

SMALL UNMARKED RADII 1/16

DRAFT ANGLES 5°

ASSY DASH NO.	MODEL	NEXT ASSY	REQ
28-5AMN	28W1062		136
28-5AMC			136
28-5AN			136
28-5ME			136
28-5MC			136
28-5MA			136
PBY-5B			136
PBY-5A			136
PBY-5	28W1062		136

ASSY DASH NO.	MODEL	NEXT ASSY	REQ
28-5AMN	28W1058		16
28-5AMC			16
28-5MN			16
28-5ME			16
28-5MC			12
28-5MA			12
PBY-5B			16
PBY-5A			16
PBY-5	28W1058		16

ASSY DASH NO.	MODEL	NEXT ASSY	REQ
28-5AMN	28W1057		76
28-5AMC			76
28-5AN			76
28-5ME			76
28-5MC			76
28-5MA			76
PBY-5B			76
PBY-5A			76
PBY-5	28W1057		76

REQUIREMENTS PER AIRPL NE

REPLACES 28W1011 (5 24 42) .497# CALC WT

REPLACED BY ACT WT

LIMITS UNLESS OTHERWISE SPECIFIED: 1/32 ± 1/10

SCALE 12" = 1'-0"

GROUP PART NUMBER WHERE SHOWN

PART NO	STOCK	MATERIAL	SPEC	NEXT ASSY	REQ'D	REV
	FORGING	AL AL/4ST	46A7-GR5			
PARTS LIST PER ASSY				0	3	4

ENG. FILE

A.C. NAVY 65,000# HEAT TREAT

NONE FINISH

HALSEY J-L-W 524-40 524-40

NAME FORGING - WING STRINGER SPLICE

CONSOLIDATED AIRCRAFT CORP. SAN DIEGO CALIF.

DWG. NO. 28W1011 SIZE D

1101M82 R 9-9-42

LET	ALTERATION	DATE	BY
M	REDRAWN & REDESIGNED TO INCORPORATE FORGING OF TWO PIECES IN ONE DIE.	9-[illegible]-42	[illegible]
N	SECTION DD = 1/16 MAXIMUM RADII WAS 1/64. BLEND R. FROM 1/16 TO 1/4 WAS 1/64 TO 1/4 SECTION C-C = 1/16 R. MAX. WAS 1/64 R. MAX. WT. CHG. NEG. E.O. No. A88296	5-10-43	STEELE
P	IN SEC. D-D "1/64 MAXIMUM RADII" WAS "1/16 MAXIMUM RADII" & NOTE "BLEND RADII FROM 1/64 TO 1/4" WAS "BLEND RADII FROM 1/16 TO 1/8" IN SEC. C-C "1/64 R MAX" WAS "1/16 R. MAX" WT CHG. NEG.	8-7-43	BELLOC
Q	IN SEC. D-D "1/16 MAXIMUM RADII" WAS "1/64 MAXIMUM RADII" & NOTE "BLEND RADII FROM 1/16 TO 1/4" WAS "BLEND RADII FROM 1/64 TO 1/4" IN SEC. C-C "1/16 R. MAX." WAS "1/64 R. MAX." WT CHG NEG.	10-2-43	LARSEN

BLEND RADII FROM 1/16 TO 1/4 (P)(Q)

BLEND RADII FROM 3/8 AT SECT. B-B TO 1/8 AT SECT. A-A

BLEND RADII FROM 1/16 TO 3/8 AT SECT. B-B

1/16 MAXIMUM RADII (N)(P)(Q)

1 3/32 (REF.)

1/8 R (REF.)

3/32 (REF.)

(REF.) 1 3/32

1 3/32

9/64

1/4 R.

3/8 R.

THESE SURFACES TO BE SMOOTH & WITHOUT DRAFT

SECTION D-D

39 1/4° (REF.)

1/16 R. MAX.

(Q)(P)(N)

SECTION C-C

39 1/4° (REF.)

1/8 R.

3/8 R. (REF.)

SECTION B-B

45°

39 1/4°

PARTING LINE

47/64

1/2

13/32 R.

1.07

1/16 R.

3/8 R.

D

1 11/32

SYM.

1 3/32

3/32

3/8

1/4 R.

23/32

1/16

4 31/32

3/8 R.

3/16 SAW CUT

9 15/16

45° (REF.)

13/32 R (REF.)

1.07 (REF.)

47/64 (REF.)

1/8 R.

SECTION A-A

NOTE
SMALL UNMARKED RADII 1/16
DRAFT ANGLES 5°

ASSY DASH NO.	MODEL	NEXT ASSY	REQ
28-5AMN	28W1057		76
28-5AMC			76
28-5AN			76
28-5ME			76
28-5MC			76
28-5MA			76
PBY-5B			76
PBY-5A			76
PBY-5	28W1057		76

REQUIREMENTS PER AIRPL NE

REPLACED 28W1011 (5-24-42) CALC WT .497#

REPLACED BY ACT WT

UNLESS OTHERWISE SPECIFIED DIMENSIONS ARE IN DECIMALS OF INCH	SCALE
±1/32 ±1/2°	12"=1'-0"

STAMP PART NUMBER WHERE SHOWN

ASSY DASH NO.	MODEL	NEXT ASSY	REQ
28-5AMN	28W1062		136
28-5AMC			136
28-5AN			136
28-5ME			136
28-5MC			136
28-5MA			136
PBY-5B			136
PBY-5A			136
PBY-5	28W1062		136

ASSY DASH NO.	MODEL	NEXT ASSY	REQ
28-5AMN	28W1058		16
28-5AMC			16
28-5MN			16
28-5ME			16
28-5MC			16
28-5MA			16
PBY-5B			16
PBY-5A			16
PBY-5	28W1058		16

PART NO	STOCK	MATERIAL	SPEC	REQ -0	REQ -2	REQ -3	REQ -4	REQ -5
	FORGING	AL AL 4 ST 46A7-GR 5						

PARTS LIST PER ASSY

ENG. FILE

AC

NAVY 65,000# HEAT TREAT

NONE FINISH

HALSEY J.L.W. 5-26-42 5-24-42 ENGR

NAME FORGING - WING STRINGER SPLICE

CONSOLIDATED AIRCRAFT CORP. SAN DIEGO CALIF.

SIZE D DWG. 28W1011

SUPPLIES & EQUIPMENT CLASSIFICATION			
LET	ALTERATION	DATE	BY
J	TRACED	4-23-37	H.W.
J	1.71 cut was 1 3/16 : added .260 dim: removed 1 23/32 dim.	4-24-40	W.H.
K	ADDED DIMS. 1/4 ± 1/64, 2 1/8 & 1/16 R (2), FINISH MARK (f). WT. CHG. NEG.	2-5-43	BAGGALEY

E.O. A97646

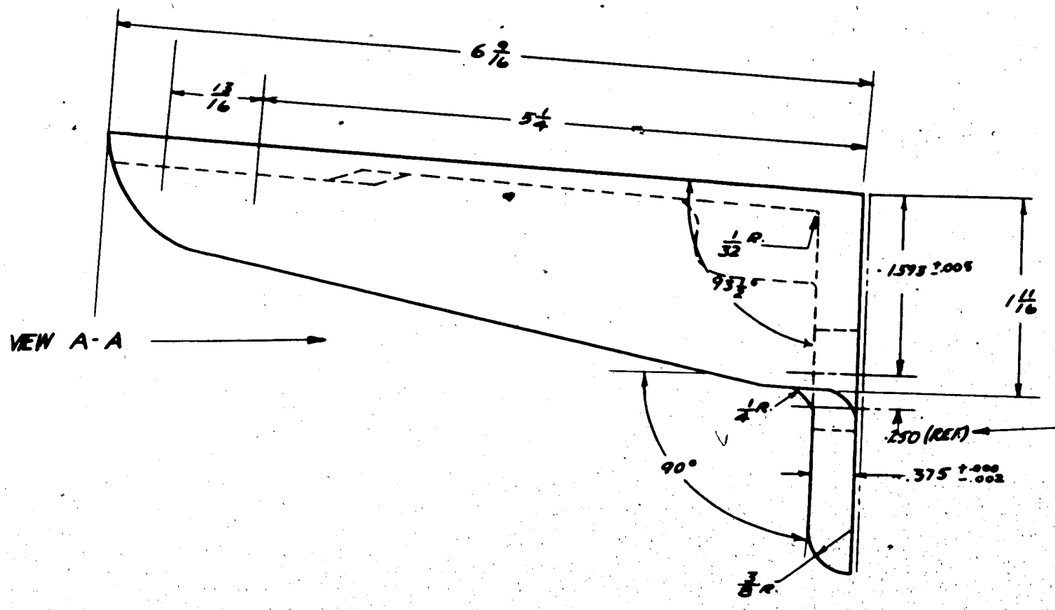

VIEW A-A

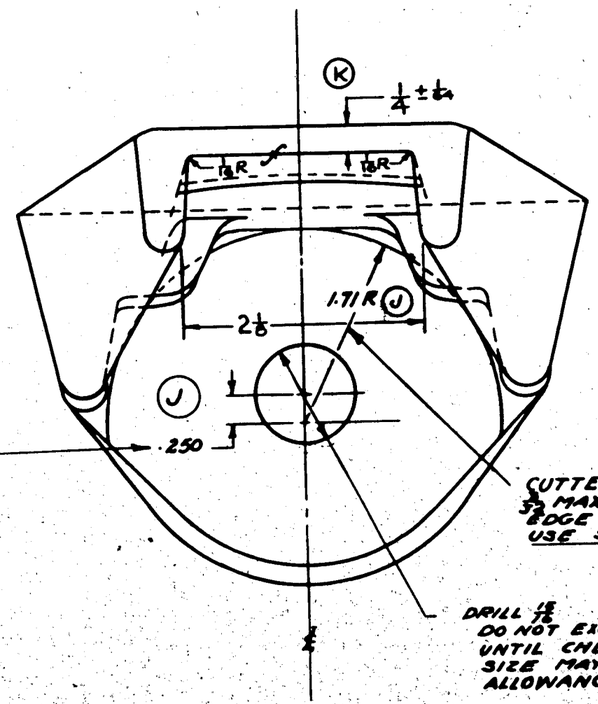

CUTTER MUST REMOVE APPROX. 3/32 MAX. FROM NEAREST EDGE OF 2 SHOULDERS
USE SPECIAL ARBOR & CUTTER 1-J-849

DRILL 15/16
DO NOT EXCEED THIS DRILL DIMENSION ON DETAIL UNTIL CHECK HAS BEEN MADE ON ASSEM. HOLE SIZE MAY THEN BE INCREASED PROVIDING SUFFICIENT ALLOWANCE IS MADE FOR SKIN & DUPRENE VARIATION

VIEW A-A

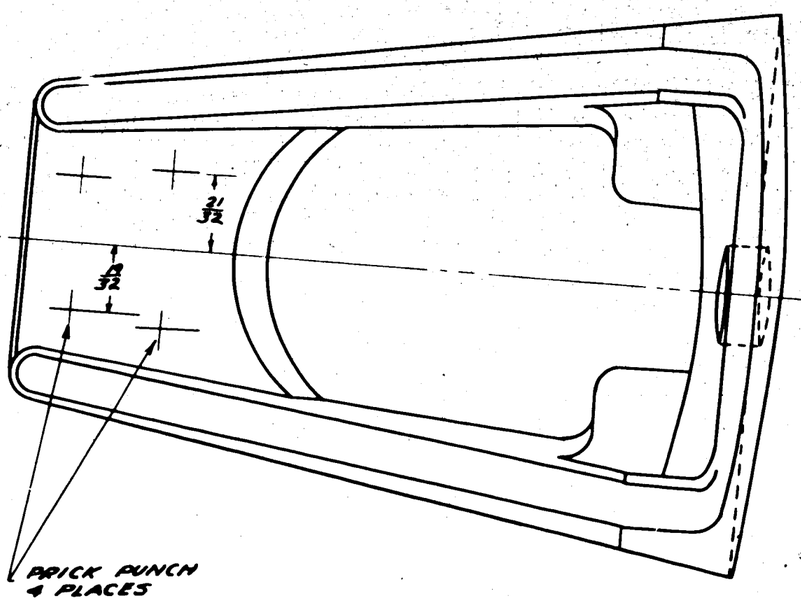

MAKE FROM 28W1014 FORGING

GP-GREEN PRIME
FINISH CODE

Z	[redacted]
P	[redacted]
GP	[redacted]
C	[redacted]

28-5AMN	28W1037	1								
28-5AMC	28W1037	1								
28-5MN	28W1037	1								
28-5ME	28W1037	1								
28-5MC	28W1037	1								
28-5MA	28W1037	1								
PBY-5B	28W1037	1								
PBY-5&5A	28W1037	VEA								
PBY-4	28W1037									
PBY-3	28W1037									
PBY-2	28W1037									
PBY-1	28W1037									
O.H.	MODEL	NEXT ASSY.	REQ.	ST'D PARTS	LH REQ.	RH REQ.	PART NO.		LH REQ.	RH REQ.
REQUIREMENTS PER AIRPLANE				MAT.	PARTS LIST PER ASSY.			28W1014		

FINISH — Z-P-GP FOR PBY-1
Z-P-GP FOR PBY-2 & FUTURE

REPLACES	RCW APPROVED	4-23-37 DATE		10-21-37	PULLED
REPLACED BY	1.22 CALC.WT.	ACT.WT.		T.A.F.	5-6-37
LIMIT ON DIMENSIONS UNLESS OTHERWISE SPECIFIED ± .010	SCALE 12" = 1'-0"			DRAFT	CHECK / EXAM. / ENG.
[redacted]	AC				
	NAVY NOTED	AS RECEIVED	NOTED		
	MATERIAL	SPEC.	HEAT TREAT	FINISH	

CONSOLIDATED AIRCRAFT CORP. BUFFALO, N. Y.
STAMP PT. No. WHERE SHOWN

NAME: FITTING-WING-SPAR-CENTER LOWER ATTACH-REAR-MACHINED

OPP. HAND

DWG. SIZE D

28W1015

SULLIVAN-MORRISSEY CO., INC. BUFFALO
IMPERIAL TRACING CLOTH

LET	ALTERATION	DATE	BY
	SUPPLIES & EQUIPMENT CLASSIFICATION		
I	TRACED	4-23-37	R.M.
J	added .461 DIM: 1.71 R cut was 1 3/32; REMOVED 3/8 REF DIM. REMOVED CUTTER TANGENCY NOTE	4-24-40	N.H.
EOA91891 K	ADDED DIMS. 1/4 ± 1/64, 2 1/8 & 1/16 R. (2 PLACES) & ADDED FINISH MARK. IN SECT. A-A NES.	4-27-45	

VIEW A-A

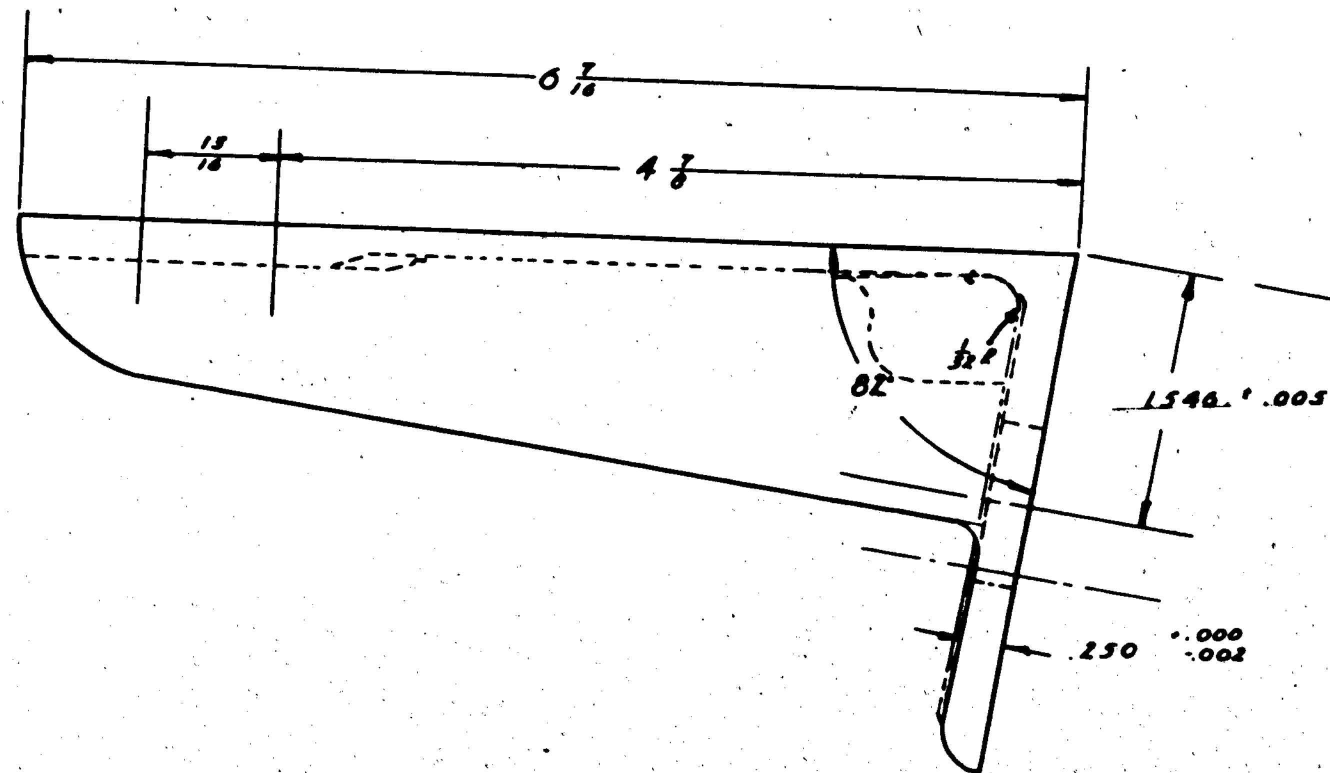

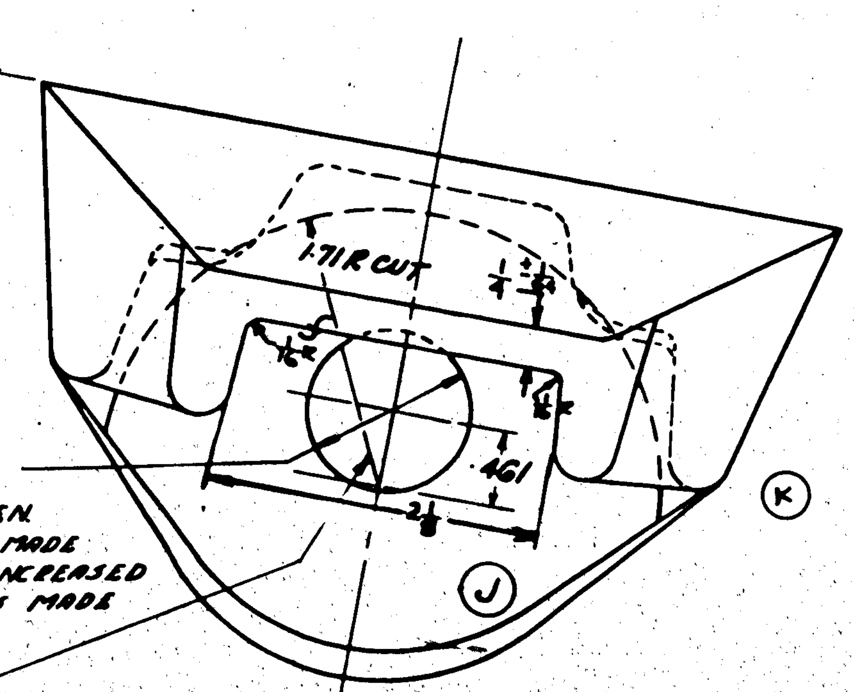

DO NOT EXCEED THIS DRILL DIMEN ON DETAIL UNTIL CHECK HAS BEEN MADE ON ASSY. HOLE SIZE MAY THEN BE INCREASED PROVIDING SUFFICIENT ALLOWANCE IS MADE FOR SKIN & DUPRENE VARIATION

CUTTER MUST REMOVE APPROX 1/32 MAX FROM NEAREST EDGE OF 2 SHOULDERS

USE SPECIAL ARBOR & CUTTER 1-J-849

SECTION A-A

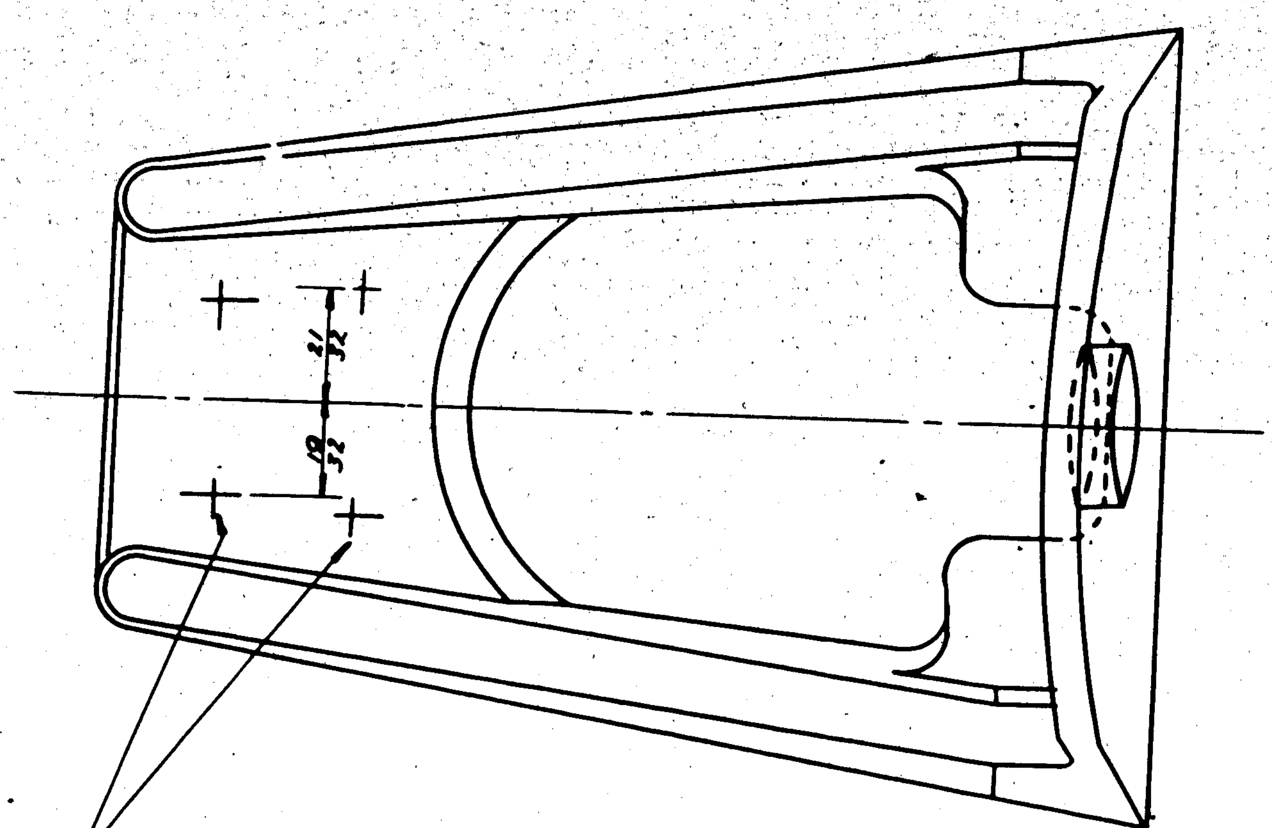

PRICK PUNCH 4 PLACES

MAKE FROM 28W1014 FORGING

FINISH
Z-P-GP FOR PBY-1
Z-P-GP FOR PBY-2 & FUTURE

GP-GREEN PRIME
FINISH CODE

Z	[redacted]
P	[redacted]
AP	[redacted]
C	[redacted]

	28-5MA	28W1038	1
	28-5ME		1
	28-5MC		1
	28-5MN		1
	28-5AMC		1
	28-5AMN	28W1038	1

O.H.	MODEL	NEXT ASSY.	REQ.
	PBY-5B	28W1038	1
	PBY-5&5A	28W1038	1 EA
	PBY-4	28W1038	
	PBY-3	28W1038	
	PBY-2	28W1038	
	PBY-1	28W1038	

ST'D PARTS	REQ. LH	REQ. RH	PART NO.	REQ. LH	REQ. RH
			28W1014	1	

REQUIREMENTS PER AIRPLANE — MAT. — PARTS LIST PER ASSY.

REPLACES
REPLACED BY
LIMIT ON DIMENSIONS UNLESS OTHERWISE SPECIFIED ± .010

[redacted]

APPROVED R.P.W. DATE 4-22-37
CALC.WT. .109 ACT.WT.
SCALE 12" = 1'0"
AC
NAVY NOTED
MATERIAL

SPEC.	HEAT TREAT	FINISH
	AS RECEIVED	NOTED.

DRAFT	CHECK	EXAM.	ENG.
T.P.F. 10-21-36	5-11-37		

CONSOLIDATED AIRCRAFT CORP.
BUFFALO, N.Y.
STAMP PT. No. WHERE SHOWN

NAME FITTING WING SPAR CENTER LOWER ATTACH-FRONT-MACHINED

OPP. HAND
DWG. SIZE D 28W1016

SULLIVAN-McKEEGAN CO., INC. BUFFALO
IMPERIAL TRACING CLOTH

SUPPLIES & EQUIPMENT CLASSIFICATION			
LET	ALTERATION	DATE	BY
A	TRACED	4-24-37	[redacted]
B	ADDED 2¼ +3/64 -1/64 & 1 1/8 DIMS. NO WT CHANGE.	5-11-37	[redacted]

(B)

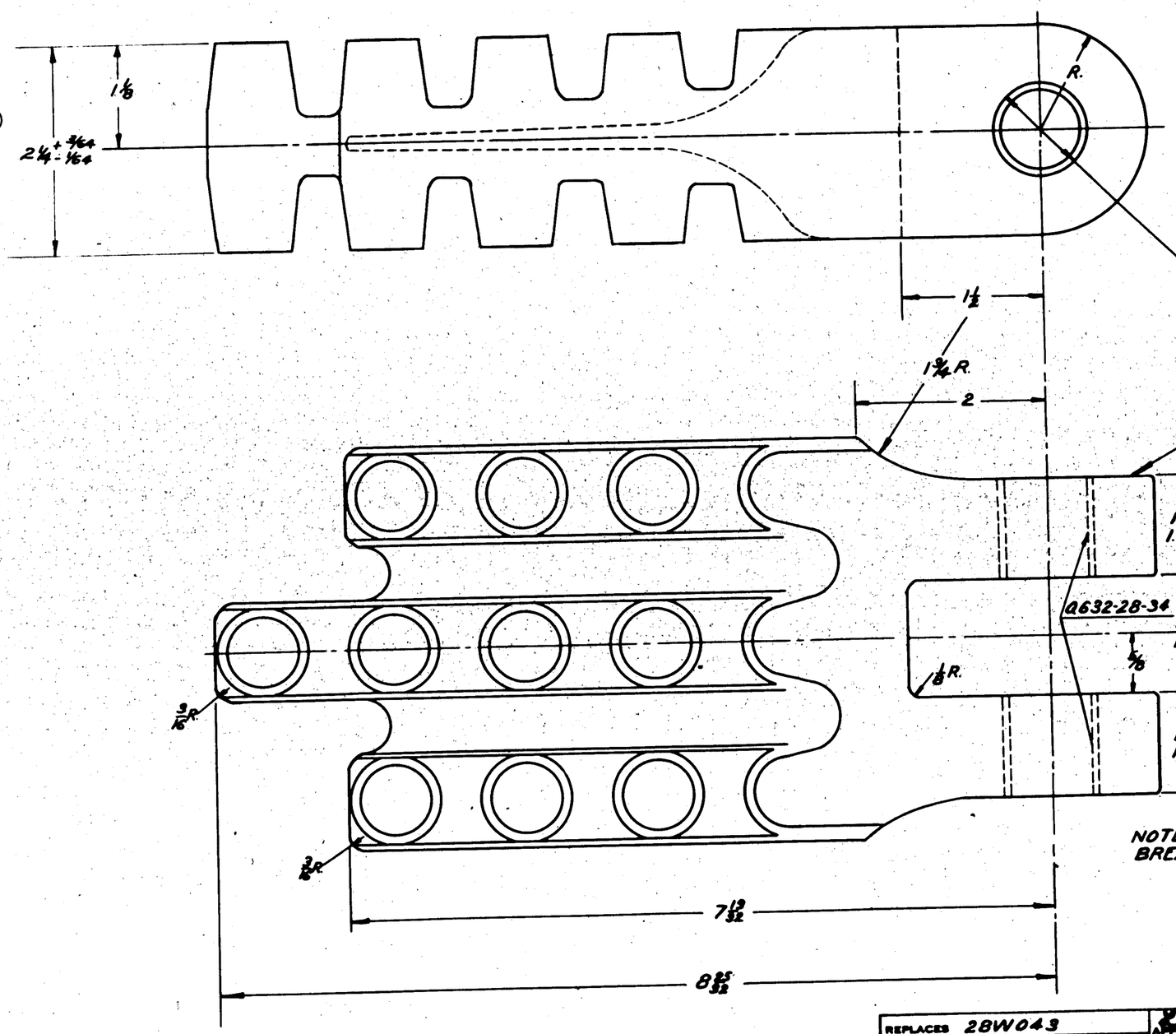

(-2) MAKE FROM 28W1010

NOTE:-
BREAK ALL CORNERS

GP-GREEN PRIME
FINISH CODE

Z	[redacted]
P	
AP	
C	

FINISH- Z-P. ~~AP~~ GP BEFORE ASSEMBLING BUSHING. (PBY-1 ONLY)
Z-P. ~~AP~~ GP PBY-2 & FUTURE

	PBY-5B	28W040	2										
	PBY-5A	28W040	2										
	PBY-4	28W040									Ø632-28-34	2	
	PBY-3	28W040									28W1017-2	1	
	PBY-2	28W040											
	PBY-1	28W040											
				O.H.	MODEL	NEXT ASSY.	REQ.	ST'D PARTS	LH REQ.	RH REQ.	PART NO.	LH REQ.	RH REQ.
				REQUIREMENTS PER AIRPLANE				MAT.	PARTS LIST PER ASSY.				

REPLACES 28W043	APPROVED [redacted]	4-24-37 DATE			10-1-35	[redacted]
REPLACED BY	CALC.WT. 4.42	ACT.WT.			Learned 5-1-37	Miller
LIMIT ON DIMENSIONS UNLESS OTHERWISE SPECIFIED ± .010	SCALE 12"=1'-0"				DRAFT	CHECK	EXAM.	ENG.
[redacted]	AC							
	NAVY NOTED		—	—	NOTED	OPP. HAND		
	MATERIAL		SPEC.	HEAT TREAT	FINISH			
	CONSOLIDATED AIRCRAFT CORP. BUFFALO, N. Y.		NAME FITTING - WING - REAR BRACE STRUT - UPPER			SIZE D	28W1017	
	STAMP PT. No. WHERE SHOWN							

BULLETIN-HEDRICH CO., INC. BUFFALO
IMPERIAL TRACING CLOTH

SUPPLIES & EQUIPMENT CLASSIFICATION			
LET	ALTERATION	DATE	BY
A	TRACED	4-24-37	GWM
B	ADDED 2 1/4 +.001 -.002 & 1 1/8 DIMS. NO KT CHANGE	8-11-42	TRVLL

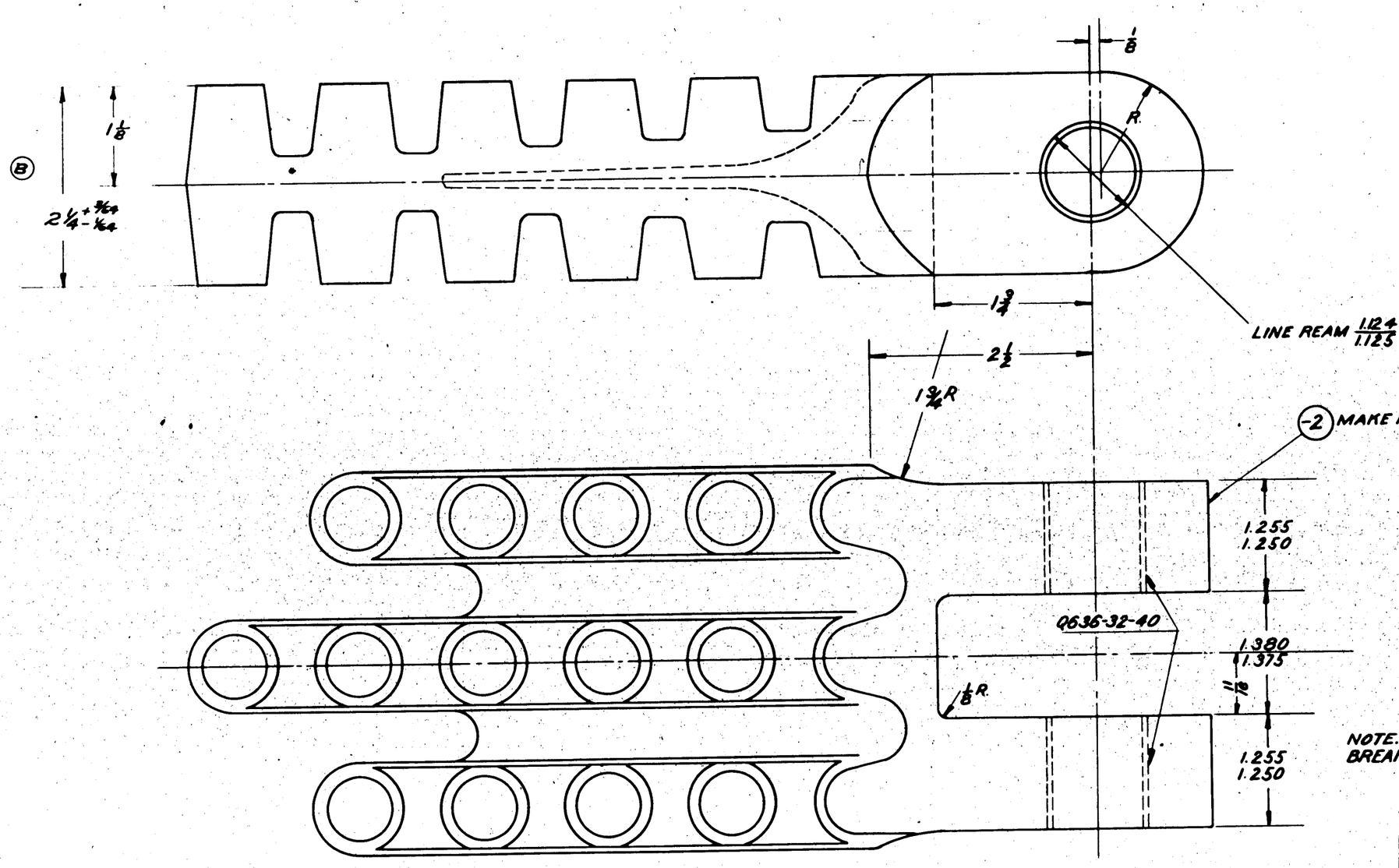

NOTE:-
BREAK ALL CORNERS

FINISH-Z-P-~~ANOD~~ GP BEFORE ASSEMBLING BUSHING. (PBY-1 ONLY)
Z-P-~~AN~~ GP PBY-2 & FUTURE

GP-GREEN PRIME
FINISH CODE

Z	[redacted]
P	[redacted]
GP	[redacted]
C	[redacted]

	PBY-5A	28W039	2							
	PBY-5B	28W039	2							
	PBY-4	28W039								
	PBY-3	28W039								
	PBY-2	28W039					0636-32-40	2		
	PBY-1	28W039	1				28W1018-2	1		
O.M.	MODEL	NEXT ASSY.	REQ.	ST'D PARTS	LH REQ.	RH REQ.	PART NO.	LH REQ.	RH REQ.	

REPLACES 28W041	28W 4-24-37 APPROVED DATE			
REPLACED BY	4.82 CALC.WT.	ACT.WT.	REQUIREMENTS PER AIRPLANE	MAT.
LIMIT ON DIMENSIONS UNLESS OTHERWISE SPECIFIED ± .010	SCALE 12"=1'-0"			PARTS LIST PER ASSY.
[redacted]	AC			10-4-35 Hanley
	NAVY NOTED	—	— NOTED	Leaved 6-4-37 Miller
	MATERIAL	SPEC.	HEAT TREAT FINISH	DRAFT CHECK EXAM. ENG.

CONSOLIDATED AIRCRAFT CORP. BUFFALO, N. Y.
STAMP PT. No. WHERE SHOWN

NAME
FITTING - WING - FRONT
BRACE STRUT - UPPER

OPP. HAND
DWG. SIZE D
28W1018

SULLIVAN-MORGENSEN CO., INC. BUFFALO
IMPERIAL TRACING CLOTH

SUPPLIES & EQUIPMENT CLASSIFICATION			
LET	ALTERATION	DATE	BY
A	TRACED	4-22-37	W.I.B.
B	ADDED 2 HOLES: 1/4 & 1/16 DIA. HOLES. NO WT. CHANGE	6-10-37	TRACED

(B)

$2\frac{1}{4}{}^{+\frac{3}{64}}_{-\frac{1}{64}}$

$1\frac{1}{8}$

(-2) MAKE FROM 28W1009

R

LINE REAM $\frac{.874}{.875}$

$1\frac{7}{16}$

$8\frac{7}{16}$

$7\frac{1}{16}$

Q628-24-22

$\frac{1}{8}$ R

$\frac{.6925}{.6875}$

$\frac{1.630}{1.635}$

$\frac{.5515}{.5550}$

$\frac{.5575}{.5550}$

$\frac{1.630}{1.635}$

Q628-24-35.5

$\frac{1}{8}$ R

$\frac{.6925}{.6875}$

Q628-24-22

$\frac{3}{16}$ R

$\frac{3}{16}$ R

NOTE :-
BREAK ALL CORNERS.

GP-GREEN PRIME

FINISH CODE	
Z	ANODIC TREATMENT
P	P-27 PRIMER
AP	ALUMINIZED PRIMER
C	CADMIUM PLATE

FINISH Z-P-~~GP~~ GP BEFORE ASSEMBLING BUSHING. (PBY-1)
Z-P-~~GP~~ GP PBY-2 & FUTURE

O.H.	MODEL	NEXT ASSY.	REQ.	ST'D PARTS	LH REQ.	RH REQ.	PART NO.	LH REQ.	RH REQ.
	28-SAMN	28W040	2						
	PBY-5B	28W040	2						
	28-5AMC	28W040	2						
	28-5MN	28W040	2						
	28-5ME	28W040	2						
	28-5MC	28W040	2						
	28-5MA	28W040	2						
	PBY-5A	28W040	2						
	PBY-5	28W040	2				Q628-24-35.5	1	
	PBY-4	28W040					Q628-24-22	2	
	PBY-3	28W040							
	PBY-2	28W040							
	PBY-1	28W040					28W1019-2	1	

REQUIREMENTS PER AIRPLANE | MAT. | PARTS LIST PER ASSY.

NOTED

DRAWN	TRACED	MILLER
No-1-35	5-8-37	

DRAFT | CHECK | EXAM. | ENG.

REPLACES 28W044

REPLACED BY

LIMIT ON DIMENSIONS UNLESS OTHERWISE SPECIFIED ± .010

[redacted]

APPROVED 4-22-37 DATE

CALC.WT. 4.14 ACT.WT.

SCALE 12" = 1'-0"

AC

NAVY NOTED

MATERIAL | SPEC. | HEAT TREAT | FINISH

CONSOLIDATED AIRCRAFT CORP. BUFFALO, N. Y.

STAMP PT. No. WHERE SHOWN

NAME
FITTING - WING - REAR BRACE STRUT - LOWER

OPP. HAND

SIZE D

28W1019

SULLIVAN HOFFMAN CO. INC. BUFFALO
IMPERIAL TRACING CLOTH

SUPPLIES & EQUIPMENT CLASSIFICATION			
LET	ALTERATION	DATE	BY
A	TRACED	4-24-37	BNM
B	ADDED 2¼ +1/64 -1/64 & 1 1/8 DIA. NO WT. CHANGE	5-18-43	TRUSSELL

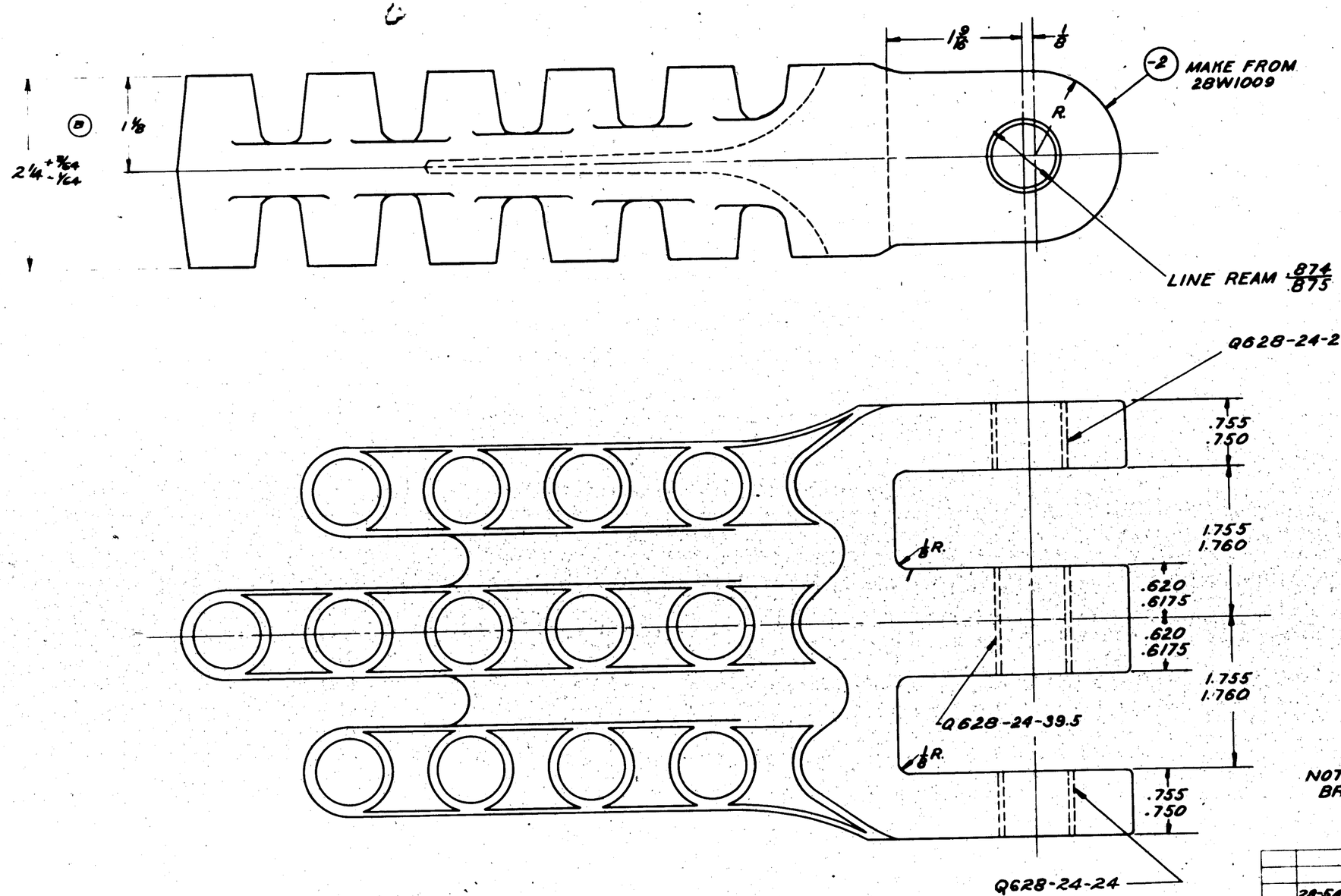

NOTE:-
BREAK ALL CORNERS

FINISH- Z-P-GP BEFORE ASSEMBLING BUSHING (PBY-1)
Z-P-GP PBY-2 & FUTURE

GP-GREEN PRIME

FINISH CODE	
Z	[redacted]
P	[redacted]
GP	[redacted]
C	[redacted]

		28-5AMN	28W037	2							
		PBY-5B	28W039	2							
		28-5AMC	28W037	2							
		28-5MN	28W037	2							
		28-5ME	28W037	2							
		28-5MC	28W037	2							
		28-5MA	28W037	2							
		PBY-5A	28W037	2							
		PBY-5	28W037	2							
		PBY-4	28W039								
		PBY-3	28W039							Q628-24-39.5	1
		PBY-2	28W039							Q628-24-24	2
		PBY-1	28W039							28W1020-2	1
O.N.	MODEL	NEXT ASSY.	REQ.	ST'D PARTS	LH REQ.	RH REQ.	PART NO.			LH REQ.	RH REQ.

REQUIREMENTS PER AIRPLANE | MAT. | PARTS LIST PER ASSY.

				10-1-35	Hunter	
				Const.	5-4-37	Miller
SPEC.	HEAT TREAT	FINISH		DRAFT	CHECK	EXAM.	ENG.
—	—	NOTED					

REPLACES 28W042
REPLACED BY
LIMIT ON DIMENSIONS UNLESS OTHERWISE SPECIFIED ±
[redacted]

APPROVED [redacted] 4-24-37 DATE
CALC. WT. 487 ACT. WT.
SCALE 12"=1'-0"
AC
NAVY NOTED
MATERIAL

CONSOLIDATED AIRCRAFT CORP. BUFFALO, N. Y.
STAMP PT. No. WHERE SHOWN

NAME: FITTING-WING- FRONT BRACE STRUT- LOWER

OPP. HAND
DWG. SIZE D
28W1020

SUPPLIES & EQUIPMENT CLASSIFICATION			
LET	ALTERATION	DATE	BY
C	TRACED	4-30-41	R.M.
M	ADDED MINUS TO 1.000" .002 DIM.	5-12-41	ROBT. MOON

28 FITZHUGH – A.V.O.

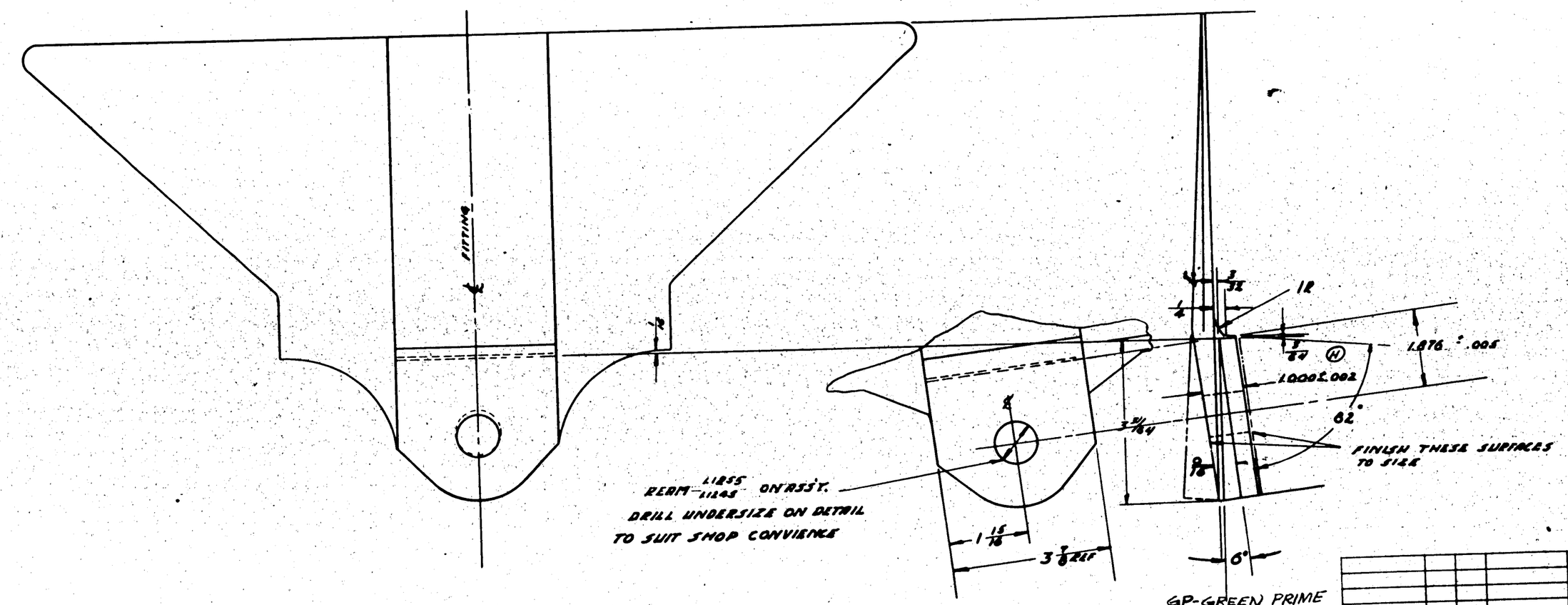

MAKE FROM 28W1021 FORGING

FINISH— GP
Z-P- [redacted] FOR PBY-1
Z-P- [redacted] GP FOR PBY-2 & FUTURE.

GP-GREEN PRIME
FINISH CODE

Z	[redacted]
P	[redacted]
[redacted]	[redacted]
C	[redacted]

PBY-5B	28W1038	1
PBY-5&5A	28W1030	1
PBY-4	28W1038	
PBY-3	↓	
PBY-2		
PBY-1	28W1039	

LH REQ.	RH REQ.	PART NO.	LH REQ.	RH REQ.
		28W1021	1	

REPLACES

REPLACED BY

LIMIT ON DIMENSIONS UNLESS OTHERWISE SPECIFIED ± .010

[redacted]

RCW APPROVED 4-26-38 DATE

RCW CALC.WT. ACT.WT.

SCALE 6"/1'0"

AC

NAVY AMTED

MATERIAL

CONSOLIDATED AIRCRAFT CORP. BUFFALO, N. Y.

STAMP PT. No. WHERE SHOWN

O.M.	MODEL	NEXT ASSY.	REQ.	STD PARTS

REQUIREMENTS PER AIRPLANE

MAT. | SPEC. | HEAT TREAT | FINISH

AS RECEIVED N.D.T.P.D.

PARTS LIST PER ASSY. - -

10-9-37 | 10-9-37 | 10-9-37 | 10-9-37

T.P.F. 5-11-37

DRAFT | CHECK | EXAM. | ENG.

NAME FITTING-WING-FRONT SPAR CENTER ATTACH - MACHINED

OPP. HAND

SIZE D DWG. 28W1035

CURTISS-WRIGHT CORP. BUFFALO

SUPPLIES & EQUIPMENT CLASSIFICATION			
LET	ALTERATION	DATE	BY
H	TRACED	7-26-37	[illegible]

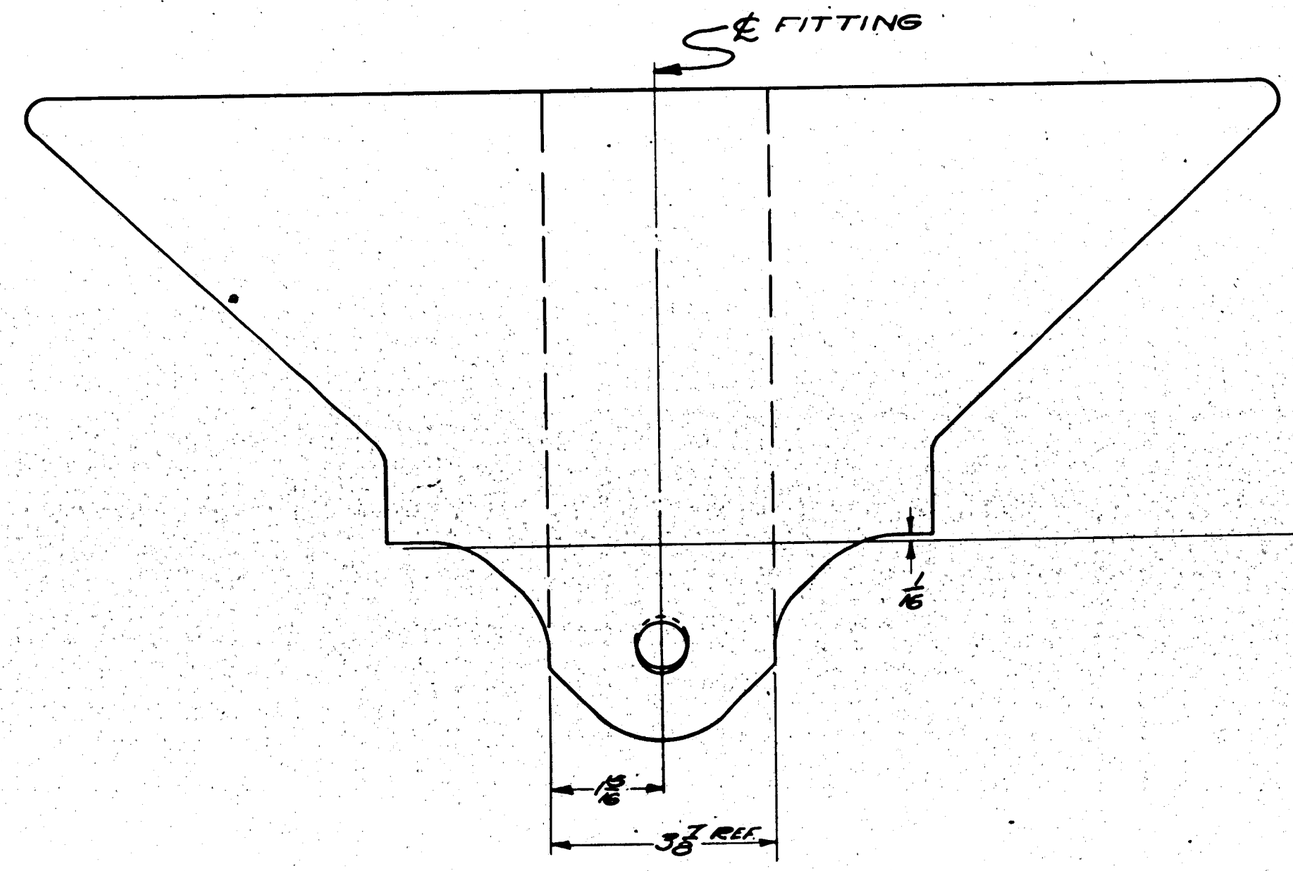

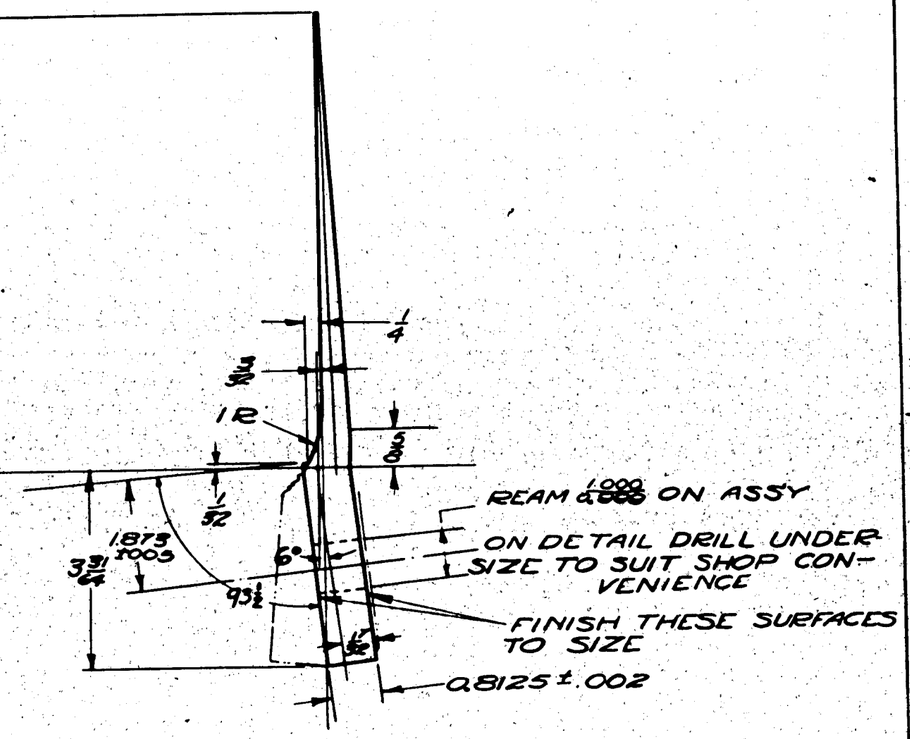

MAKE FROM 28W1021 FORGING

FINISH
Z-P-GP FOR PBY-1
Z-P-GP FOR PBY-2 & FUTURE

GP-GREEN PRIME

CODE	
Z	ANODIC TREATMENT
P	[illegible]
AP	[illegible]
C	[illegible]

														28W1021	
	PBY-5A	28W1037	1												
	PBY-5B	28W1037	1												
	PBY-4	28W1037													
	PBY-2	28W1037													
	PBY-3	28W1037													
	PBY-1	28W1037													
O.H.	MODEL	NEXT ASSY.	REQ.	ST'D PARTS	LH REQ.	RH REQ.	PART NO.	LH REQ.	RH REQ.
	REQUIREMENTS PER AIRPLANE			MAT.	PARTS LIST PER ASSY.				

REPLACES	APPROVED 8-26-37 DATE						
REPLACED BY	3.08 CALC.WT. ACT.WT.						
LIMIT ON DIMENSIONS UNLESS OTHERWISE SPECIFIED ±.010	SCALE 6"=1'-0"						
[redacted]	AC						
	NAVY NOTED	—	AS RECEIVED	NOTED	T.F.F.	5-H-37	
	MATERIAL	SPEC.	HEAT TREAT	FINISH	DRAFT	CHECK	EXAM. ENG.
CONSOLIDATED AIRCRAFT CORP. BUFFALO, N. Y.	NAME FITTING-WING REAR SPAR CENTER ATTACH.—MACHINED				OPP. HAND		
STAMP PT. No. WHERE SHOWN					SIZE D	DWG. 28W1038	

SULLIVAN-SCHEIBLER CO., INC., BUFFALO
IMPERIAL TRACING CLOTH

SUPPLIES & EQUIPMENT CLASSIFICATION			
LET	ALTERATION	DATE	BY
F	TRACED	4-27-37	CLARK
G	DIMS. REVISED & PART NOS. ADDED AS FOLLOWS:- ADDED TABLE OF ROUGH STAMPINGS -20, -30, & -40 ADDED -8, -9, -10, & -11 AS OPP. HAND NOS. FOR -2, -3, -5, & -6 RESP. REMOVED -4 FROM B.M.	4-28-38	[redacted]
H	"L" DIM. OF -2 WAS 71½, -3 WAS 72 3/16, -5 WAS 61, -6 WAS 60⅛	12-13-38	[redacted]

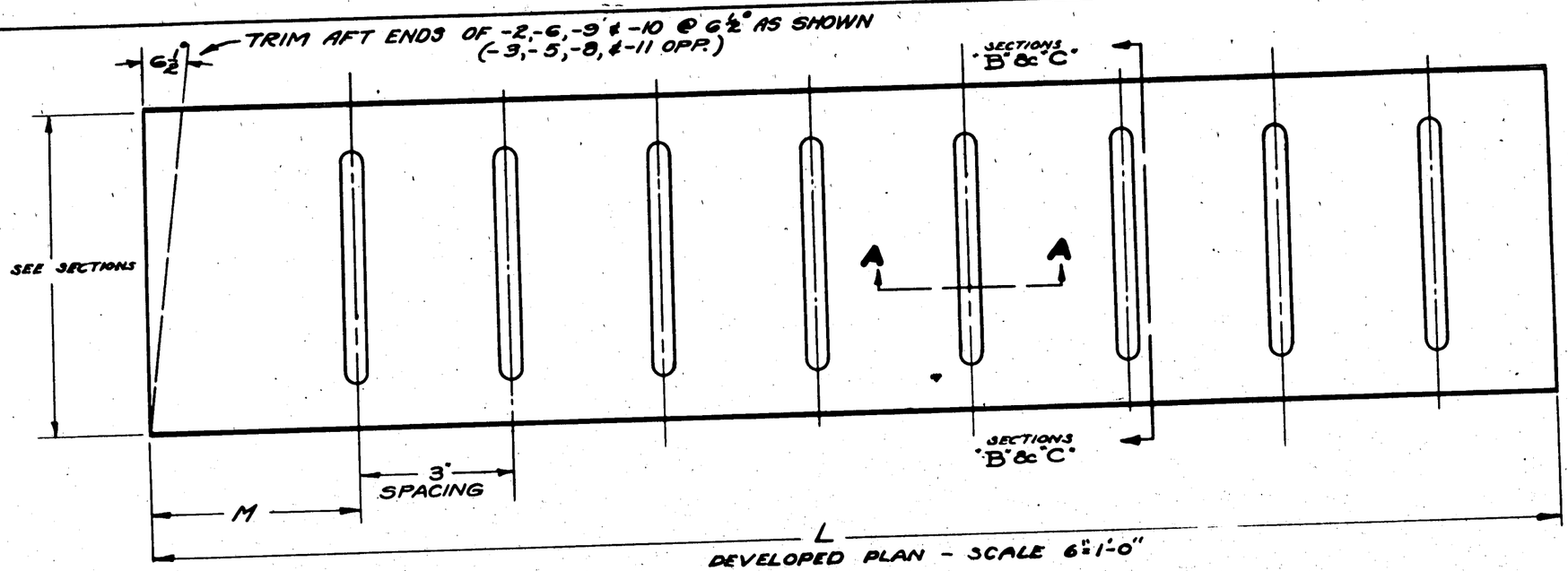

DEVELOPED PLAN - SCALE 6"=1'-0"

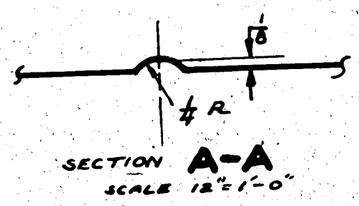

SECTION A-A
SCALE 12"=1'-0"

TABLE OF ROUGH STAMPINGS					
PART NO.	L	M	W	NO. OF BEADS	USED TO MAKE
-20	74	5	6 3/8	23	28W2040-2 & -3
-30	76	5	6 1/16	23	28W1040-2, -3, -8 & -9 28W2040-4, -5 & -6
-40	63	3	6 3/8	20	28W1040-5, -6, -10, & -11

NOTE:- -40 STAMPING IS MADE FROM SAME DIE AS -20 THE ONLY DIFFERENCE BEING THE "L" & "M" DIM.

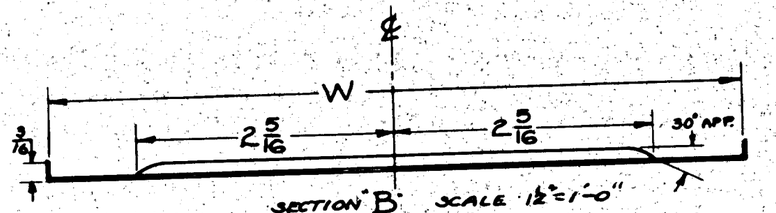

SECTION "B" SCALE 12"=1'-0"

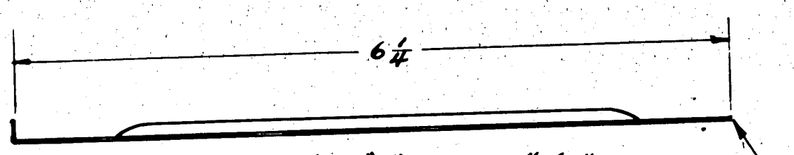

SECTION "C" SCALE 12"=1'-0"

REINF. SHEETS - OUTER PANEL - T.E.					
PART NO.	MAKE FROM	L	M	OPP. HAND	NEXT ASS'Y.
-2	-30	72½	2½ APP.	-8	28W023 ℄ -1
-3	-30	73 3/16	3½ APP.	-9	28W023 ℄ -1
* -5	-40	62	2½° APP.	* -10	28W023 ℄ -1
* -6	-40	61 1/8	2° APP.	* -11	28W023 ℄ -1

SEE DWG. 28W2040 FOR DETAILS OF CENTER SECTION REINFORCING SHEETS.

* NOTE:- MAKE -5, -6, -10, & -11 BY TRIMMING OFF ONE FLANGE OF -40 TO DIM. AS SHOWN.

NOTE: BEND RADII 1/16 APPROX.

FINISH GP
Z-P-[redacted] - PBY-1
Z-P-[redacted] - PBY-2
Z-P-AP - PBY-3, PBY-4 & FUTURE.

GP-GREEN PRIME

FSH CODE	
Z	[redacted]
P	[redacted]
AP	[redacted]
C	[redacted]

	PBY-5A	SEE B.M.
	PBY-5B	SEE B.M.
	PBY-4	NOTED
	PBY-3	NOTED
	PBY-2	NOTED
	PBY-1	NOTED

NOTED

O.H.	MODEL	NEXT ASSY.	REQ.	ST'D PARTS	LH REQ.	RH REQ.	PART NO.	LH REQ.	RH REQ.
REQUIREMENTS PER AIRPLANE				MAT.	PARTS LIST PER ASSY.				

REPLACES
REPLACED BY 28W2040 ON 28W1040-1
LIMIT ON DIMENSIONS UNLESS OTHERWISE SPECIFIED ± .010
[redacted]
SCALE NOTED
AC
NAVY .020 AL. ALLOY SH
MATERIAL

XCW APPROVED 4-27-37 DATE
NOTED CALC. WT. ACT. WT.
NOTED SPEC. NOTED HEAT TREAT NOTED FINISH

MAYES 12-6-36 MILLER 5-11-37
DRAFT CHECK EXAM. ENG.
OPP. HAND —

CONSOLIDATED AIRCRAFT CORP. BUFFALO, N. Y.
STAMP PT. No. WHERE SHOWN

NAME REINFORCING SHEETS - WING - TRAILING EDGE

DWG. D 61122 28W1040

ALL AL. ALLOY SHEET 24ST. SPEC. 47A10 (CONDITION T) ALLOY 24T EXCEPT AS NOTED
ALL AL. ALLOY EXTRUSIONS SPEC. (CONDITION T) ALLOY 24T EXCEPT AS NOTED
HEAT TREAT ALL CONDITION A MATERIAL PER SPEC 3R39
RIVETS AL. ALLOY EXCEPT AS NOTED

SUPPLIES & EQUIPMENT CLASSIFICATION			
LET	ALTERATION	DATE	BY
A	TRACED	6-24-37	V.I.B
B	7/8 DRILL ADDED	1-17-38	[illegible]
	PBY 4 REQ. ADDED	"	"
C	17/64 DIM WAS 9/32 - 1/16 WAS 11/32		
	& 2 7/32 WAS 2 1/4	10-10-40	W.H.S.
D	CHANGED RADIUS ON TOP TO BEVEL 1/16 X 45°	1-10-41	S.J.M.

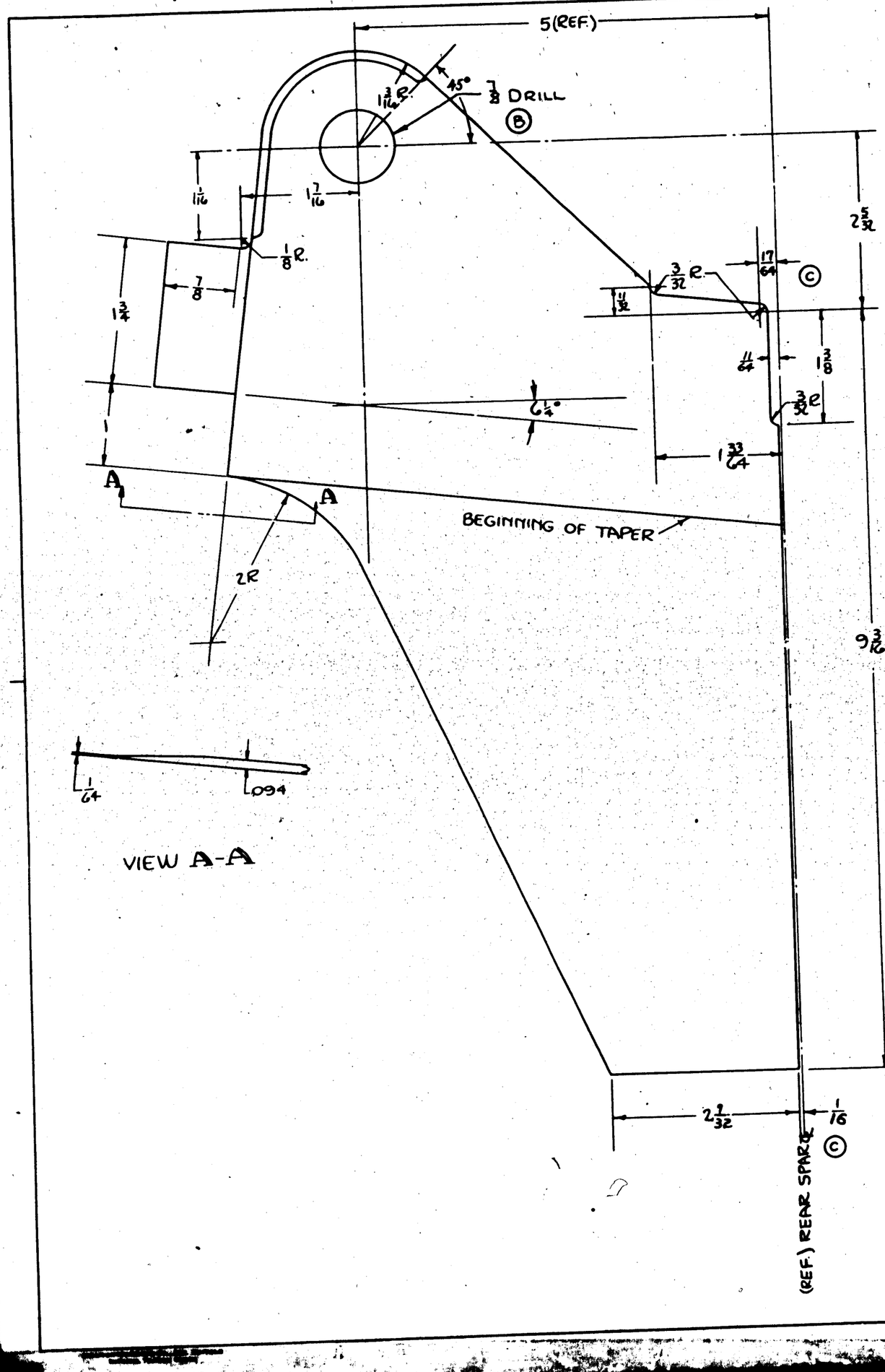

VIEW A-A

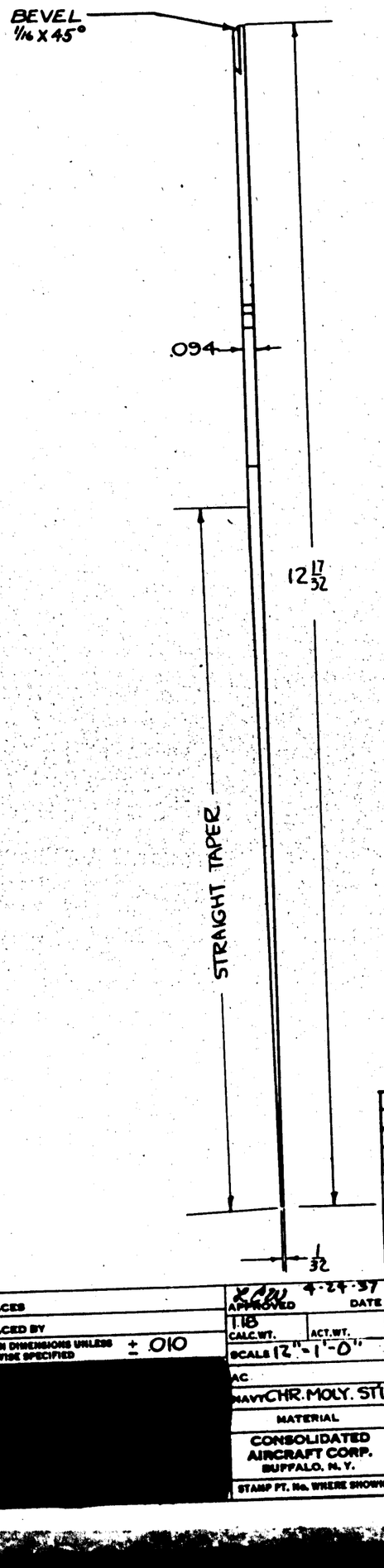

FINISH -
CADMIUM PLATE. -
PRIME EXCEPT WHERE SURFACE COMES IN CONTACT WITH GAS.

L.H. SHOWN.
R.H. OPPOSITE.

-R	PBY-5A(L)	28W1091	LEA										
-L	PBY-5A(R)	28W1094	LEA										
-1	PBY-5	28W1041											
	PBY-5	28W1041											
-1	PBY-4	28W1041											
	PBY-4	28W1041											
-1	PBY-3	28W1041											
	PBY-3	28W1041											
-1	PBY-2	28W1041											
	PBY-2	28W1041											
-1	PBY-1	28W1041											
	PBY-1	28W1041											

REPLACES		APPROVED	4-24-37 DATE	O.H.	MODEL	NEXT ASSY.	REQ.	ST'D PARTS	LH REQ.	RH REQ.	PART NO.	LH REQ.	RH REQ.
REPLACED BY		CALC.WT. 1.18	ACT.WT.	REQUIREMENTS PER AIRPLANE				MAT.	PARTS LIST PER ASSY.				
LIMIT ON DIMENSIONS UNLESS OTHERWISE SPECIFIED	± .010	SCALE 12" - 1'-0"											
[redacted]		AC							1-16-38 [illegible] MILLER				
		NAVY CHR. MOLY. STL	47514a	SH-27b-4				NOTED	T.P.F. 5-18-37				
		MATERIAL	SPEC.	HEAT TREAT				FINISH	DRAFT	CHECK	EXAM.	ENG.	
CONSOLIDATED AIRCRAFT CORP. BUFFALO, N. Y.		STAMP PT. No. WHERE SHOWN		NAME FITTING-WING-REAR SPAR HOISTING SLING					OPP. HAND 28W1045-				
									SIZE D	SCALE	28W1045		

SUPPLIES & EQUIPMENT CLASSIFICATION			
LET	ALTERATION	DATE	BY
B	TRACED	5-19-37	V.I.B
C	CHANG'D DIM 4 15/16 TO 4 31/32 & 1/8 TO 5/32	10-18-40	SINGER
D	CHANGED RADIUS ONTOP TO BEVEL 1/16 X 45°	1-10-41	SINGER
E	DIM. CHG'D & LIMITS ADDED	3-7-41	SPECHT
F	DWG. 5 13/16 DIM. WAS 5 23/16	6-4-41	EVANS

PBY

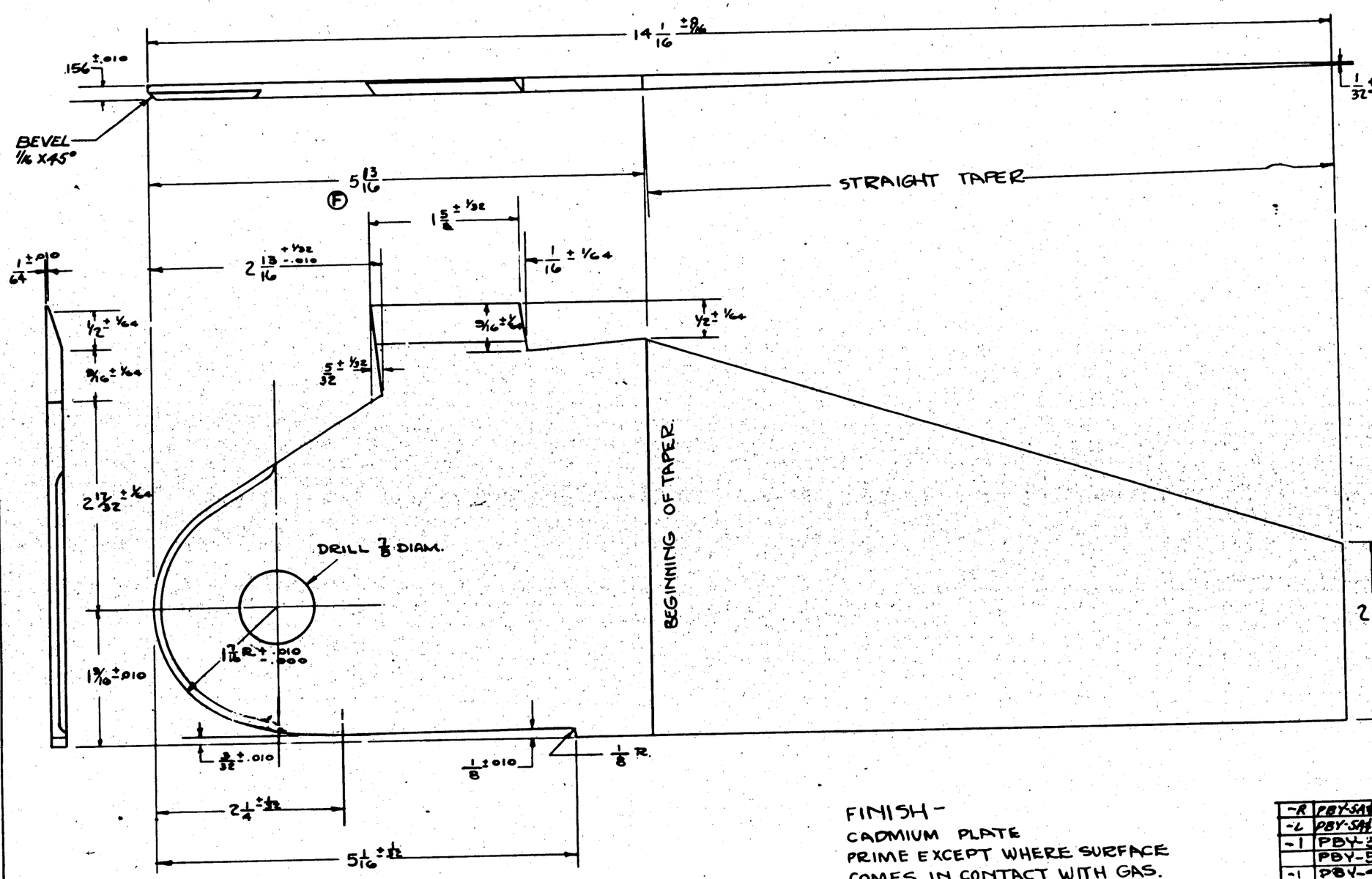

FINISH -
CADMIUM PLATE
PRIME EXCEPT WHERE SURFACE COMES IN CONTACT WITH GAS.

L.H. SHOWN.
R.H. OPP.

-R	PBY-5A&B	28W1043	IEA								
-L	PBY-5A&B	28W1043	IEA								
-1	PBY-5	28W1043									
	PBY-5	28W1043									
-1	PBY-4	28W1043									
	PBY-4	28W1043									
-1	PBY-3	28W1043									
	PBY-3	28W1043									
-1	PBY-2	28W1043									
	PBY-2	28W1043									
-1	PBY-1	28W1043									
	PBY-1	28W1043									

O.H.	MODEL	NEXT ASSY.	REQ.	ST'D PARTS	LH REQ.	RH REQ.	PART NO.	LH REQ.	RH REQ.
REQUIREMENTS PER AIRPLANE				MAT.	PARTS LIST PER ASSY.				

REPLACES
REPLACED BY
LIMIT ON DIMENSIONS UNLESS OTHERWISE SPECIFIED NOTED

J.W. APPROVED 5-19-37 DATE
1.33 CALC.WT. ACT.WT.
SCALE 12" - 1'-0"
AC
NAVY CHR. MOLY. STL — MATERIAL
4 S 14a — SPEC.
SH-27-4 (115,000) — HEAT TREAT
NOTED — FINISH

11-16-35 DRAFT — MILLER
T.P.F. 5-29-37 CHECK
EXAM.
ENG.

CONSOLIDATED AIRCRAFT CORP. BUFFALO, N.Y.
STAMP PT. No. WHERE SHOWN

NAME FITTING-WING-FRONT SPAR HOISTING SLING

OPP. HAND 28W1046-1

SIZE D — DWG. 28W1046

SUPPLIES & EQUIPMENT CLASSIFICATION			
LET	ALTERATION	DATE	BY
E	TRACED	4-24-37	H W
F	CHANGED SHEET REQUIREMENTS FROM AL ALLOY TO ALCLAD.	11-17-39	Powell
G	ADDED Z-P FINISH	11-19-39	[illegible]
H	CREATE ASS'Y -2 FOR -10 & -11 WITHOUT SLOT	11-1-40	Crimson
J	IN B/M REMOVED -9 IN -55 ASS'Y -55 ASS'Y WAS -2. ON FACE -55 ASS'Y WAS -2 & -10 L WAS -10, -11 R WAS -11	6-3-41	WALL DAUM
K	REMOVED -55 DETAIL & IN B/M -55 ASS'Y. REMOVED SLOT FROM DETAIL ON FACE.	6-19-41	WALL DAUM
L	"GRIND 1/4 R --- CORNER" WAS "GRIND 1/8 R --- CORNER." WT. CHG. NEG.	1-2-43	BAGGALEY
M	REMOVED -9 FROM DWG & B/M ES WT CHG -.205	7-1-43	DADMUN
N	GRIND TO 1/4 R. (REF.) WAS GRIND TO 1/8 R (REF.) NO WT. CHG.	8-19-43	MAIN

E O 21455

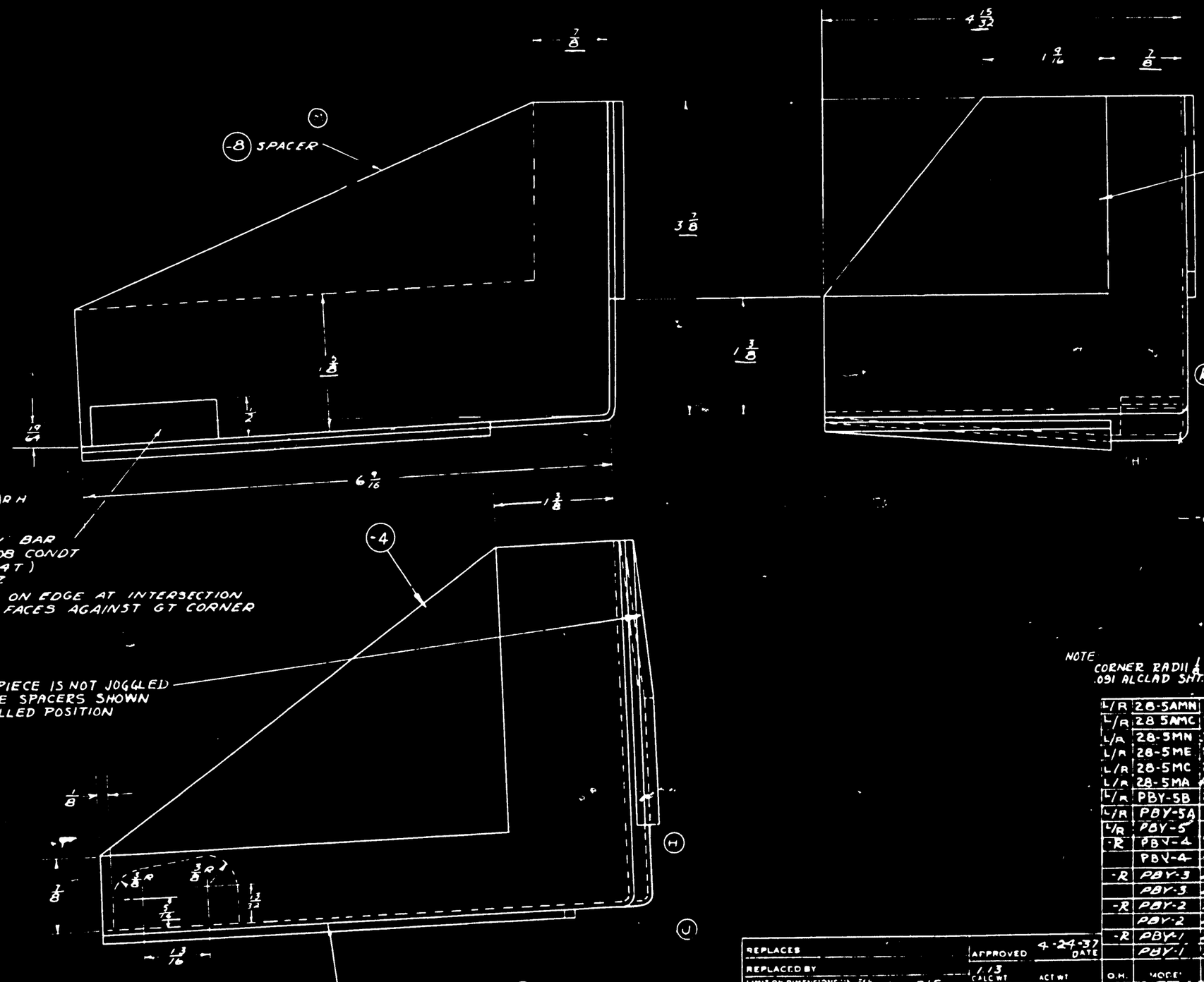

1/4 AL ALLOY BAR
SPEC M 208 CONDT
(ALLOY) (24 T)
FINISH - Z
GRIND 1/4 R ON EDGE AT INTERSECTION OF THE 2 FACES AGAINST GT CORNER
L

NOTE-
CORNER PIECE IS NOT JOGGLED
SEPERATE SPACERS SHOWN
IN INSTALLED POSITION

-2 LH -3 RH .128 ALCLAD SHT.
SPEC. -17A8 COND A (ALLOY X2450)
HT SR53 COND T - AFTER FORM.
F
-0 ASSEM

NOTE
CORNER RADII 1/8. ALL SPACERS -9, -5, -8
.091 ALCLAD SHT. 24ST SPEC. 47A8
E

N
--6, -7 (REF.) GRIND TO 1/4 R (REF.) AT THIS EDGE

FINISH CODE	
A	ANODIC TREATMENT
P	PAINT PRIMER
G	GREEN PRIMER
C	CADMIUM PLATE

L/R	O.M.	"MODEL"	NEXT ASSY	REQ.	ST'D PARTS	LH REQ.	RH REQ.	PART NO	LH REQ.	RH REQ.
L/R		28-5AMN	28W1037	1EA						
L/R		28-5AMC	28W1037	1EA						
L/R		28-5MN	28W1037	1EA						
L/R		28-5ME	28W1037	1EA						
L/R		28-5MC	28W1037	1EA						
L/R		28-5MA	28W1037	1EA						
L/R		PBY-5B	28W1037	1EA						
L/R		PBY-5A	28W1037	1EA						
L/R		PBY-5	28W1037	1EA						
-R		PBY-4	28W1037					-8	/	/
		PBY-4	28W1037					-7		/
-R		PBY-3	28W1037					-6	/	
		PBY-3	28W1037					-5	/	/
-R		PBY-2	28W1037					-4	/	/
		PBY-2	28W1037					-3		/
-R		PBY-1	28W1037					28W1050-2	/	
		PBY-1	28W1037					-0 ASSEM.		

REPLACES	APPROVED 4-24-37 DATE	REQUIREMENTS PER AIRPLANE	MAT.
REPLACED BY	1.13 CALC WT. ACT WT.		PARTS LIST PER ASSY. 11-13-39 Thomas Miller
LIMIT ON DIMENSIONS UNLESS OTHERWISE SPECIFIED ± .015	SCALE 12" = 1'-0"		TPF 5123J
	AC NAVY NOTED	NOTED	Z-P
	MATERIAL	SPEC.	FINISH
	CONSOLIDATED AIRCRAFT CORP. BUFFALO N.Y.	NAME FITTING ASS'Y SPAR CENTER ATTACH - GAS TIGHT COMP	DRAFT CHECK ENGR ENG.
	STAMP ET. NO. WHERE SHOWN		OPP HAND 28W1050-R
ENG. FILE			DWG SIZE D 28W1050

28W1050 R

LET	ALTERATION	DATE	BY
H	TRACED	6-2-43	CREW & MAW
J	REM'D 5/16 & CHG'D DIMS TO 1 5/16, 2 5/16, 2 5/8, 3, 3 5/16, 3 11/16, 4, 4 9/16, 1/4 ± .010 WAS ± 1/16 NO WT CHG	6-2-43	CREW & MAW

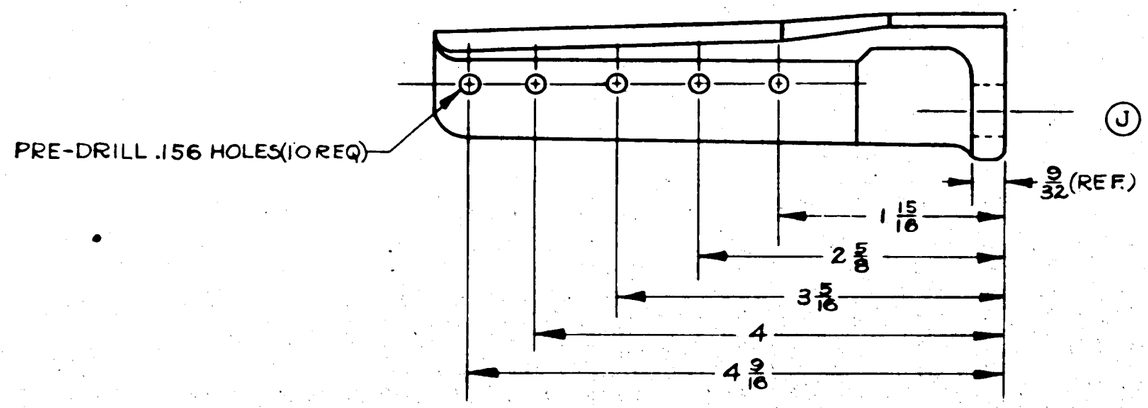

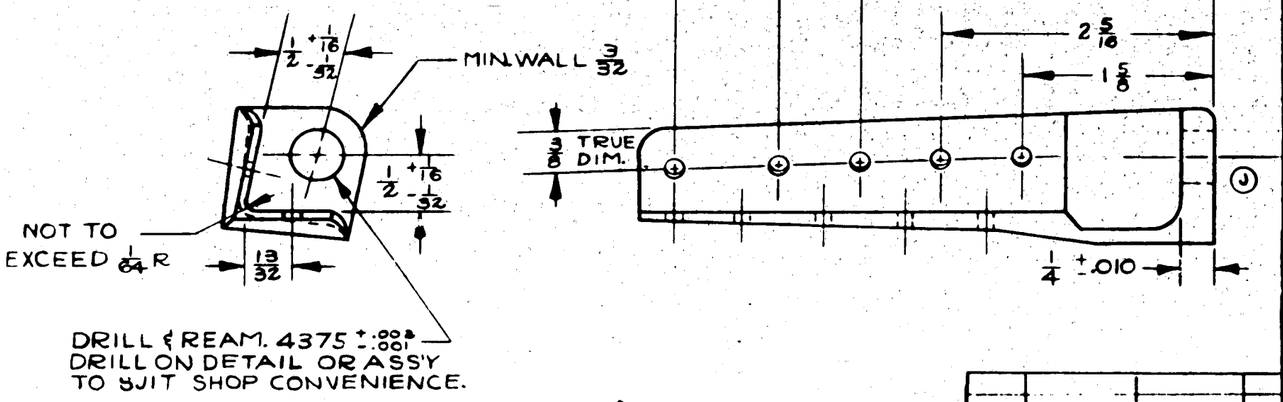

-R	PBY-5B	28W4155	23
-L	PBY-5B	28W4155	23
-R	PBY-5A	28W004	15
-L	PBY-5A	28W004	15
-R	PBY-5	28W004	15
-L	PBY-5	28W004	15
-R	28-5MA&ME	28W4155	23EA
-L	28-5MA&ME	28W4155	23EA
-R	28-5AMC&AMN	28W5555	23EA
-L	28-5AMC&AMN	28W5555	23EA
-R	28-5MC&MN	28W5555	23EA
-L	28-5MC&MN	28W5555	23EA
-R	28-5AMC&AMN	28WC04	15EA
-L	28-5AMC&AMN	28W004	15EA
-R	28-5ME&MN	28W004	15EA
-L	28-5ME&MN	28W004	15EA
-R	28-5MA&MC	28W004	15EA
-L	28-5MA&MC	28W004	15EA
	PBY-4	28W004-1	
	PBY-4	28W004	
	PBY-4	28W4005	
	PBY-3	28W004-1	
	PBY-3	28W004	
	PBY-3	28W3005	
	PBY-2	28W004-1	
	PBY-2	28W004	
	PBY-2	28W2005	
	PBY-1	28W004-1	
	PBY-1	28W004	
	PBY-1	28W005	

ASST. DASH NO.	MODEL	NEXT ASSY.	REQ.

REQUIREMENTS PER AIRPLANE

-R	PBY-5A	28W3005	23
-L	PBY-5A	28W3005	23
-R	PBY-5B	28W004	15
-L	PBY-5B	28W004	15
36 & ON -R	PBY-5	28W3005	23
36 & ON -L	PBY-5	28W3005	23
1 TO 35 -R	PBY-5	28W4005	23
1 TO 35 -L	PBY-5	28W4005	23
-NO	MODEL	N.A.	REQ

REQ. PER. AIRPLANE

FINISH CODE	
Z	ANODIC TREATMENT
P	P-27 PRIMER
GP	GREEN PRIMER
C	CADMIUM PLATE

REPLACES 28W1057 of 12-16-35 — .15 CALC. WT.

REPLACED BY — ACT. WT.

UNLESS OTHERWISE SPECIFIED — SCALE 12" = 1'0"

STAMP PART NUMBER WHERE SHOWN

PART No.	STOCK	MATERIAL	SPEC.	LH REQ.	RH REQ.	LH REQ.	RH REQ.	LH REQ.	RH REQ.	LH REQ.	RH REQ.	LH REQ.	RH REQ.
				-0		-2		-3		-4		-5	
B	MAKE FROM FORG. 28W1011												

PARTS LIST PER ASSY.

AC			DAVEN-PORT	ANDER-SON	MILLER		L.C.W.
NAVY —	Z - P		12-16-35	3-4-37			1-16-36
HEAT TREAT	FINISH		DRAFT	CHECK	STRUCT	MAT	APPROV	ENG.

NAME FIT. - WING - OUTER PANEL ATTACH JOINT "Z" STRINGER SPLICE.

OPP. HAND 28W1057-R

CONSOLIDATED VULTEE AIRCRAFT CORP. SAN DIEGO DIVISION . . SAN DIEGO, CALIF.

DWG. D SIZE 28W1057

28W1057 R

SUPPLIES & EQUIPMENT CLASSIFICATION			
LET	ALTERATION	DATE	BY
C	TRACED	4-24-39	V.I.B.
D	.064 WAS .051 IN -5 ON PC. DWG	4-18-41	COPELAND

PBY-5 B.A.C.E.Q. 404

25 11/16 TO ℄ FRONT SPAR

(-2) 3/4 x 3/4 x .060 ANGLE
ALCOA DIE # K 5401
AL. ALLOY 24ST - SPEC. 46A9 COND T.

TOP AND BOTTOM ENDS

28W1066

TUBE END AND ANGLE FLANGE ARE FLUSH HERE

AN442-D3
Q4305-D6
AC425-D4

D4 MAY BE USED

THESE RIVETS INTEGRAL PART OF DETAIL

.3115 +.001 -.000 REAM - 2 HOLES
BUSHING - Q610-8-7
PRESS IN PLACE AFTER (Z-P)

(-3) 3/4 x 3/4 x .060 ANGLE
ALCOA DIE # K 5401
AL. ALLOY 24 ST
SPEC. 46A9 COND T

(-4) 5/32 THICK PLATE
ALUM. ALLOY -24ST
SPEC. 47A10 COND T

(-5) .064 x 10 15/16 x 2 3/8 SHEET (D)
AL ALLOY 24ST
SPEC. 47A10 COND T.

FROM INSIDE OF SKIN TO ℄ BOLT HOLE 5 11/16

3 EQUALLY SPACED RIVETS

4 EQUALLY SPACED RIVETS

2857 (REF.)

WING CHORD LINE
STA # 26 (REF.)

DRILL 1/8 ON DETAIL AT LOCATIONS SHOWN AND INSTALL WITH AN442-D4 RIVETS AT ASSY.

GP-GREEN PRIME FINISH COAT

Z	[redacted]
P	[redacted]
AP	[redacted]
C	[redacted]

O.H.	MODEL	NEXT ASSY.	REQ.	ST'D PARTS	LH REQ.	RH REQ.	PART NO.	LH REQ.	RH REQ.
	PBY-5A&B	28W020	1EA						
	PBY-5A&B	28W020	1EA						
	PBY-5	28W020-1							
	PBY-5	28W020							
	PBY-4	28W020-1							
	PBY-4	28W020							
	PBY-3	28W020-1							
	PBY-3	28W020							
	PBY-2	28W020-1							
	PBY-2	28W020					28W1066	1	
	PBY-1	28W020-1		Q610-8-7	2		-5	1	
	PBY-1	28W020		AN442-D3	4		-4	2	
	XP3Y-1	28W020-1		Q4305-D6	8		-3	1	
	XP3Y-1	28W020		AC425-D4	8		28W1064-2	1	

REQUIREMENTS PER AIRPLANE | MAT. | PARTS LIST PER ASSY.

BEFORE INSTALL. BUSHING Z-2P-GP

J.S. Miller 12-31-38 5187

DRAFT | CHECK | EXAM. | ENG.

REPLACES

REPLACED BY

LIMIT ON DIMENSIONS UNLESS OTHERWISE SPECIFIED ±.010

APPROVED 4-24-39 DATE

CALC.WT. 45 ACT.WT.

SCALE 12" = 1'-0"

AC

NAVY NOTED

MATERIAL | SPEC. NOTED | HEAT TREAT NOTED | FINISH

CONSOLIDATED AIRCRAFT CORP. BUFFALO, N. Y.

STAMP PT. No. WHERE SHOWN

NAME

BRACKET - WING FLOAT LOCK - ASS'Y

OPP. HAND

SIZE D SCALE 1/2

28W1064

SUPPLIES & EQUIPMENT CLASSIFICATION			
LET	ALTERATION	DATE	BY
B	TRACED	4-24-37	H.W.

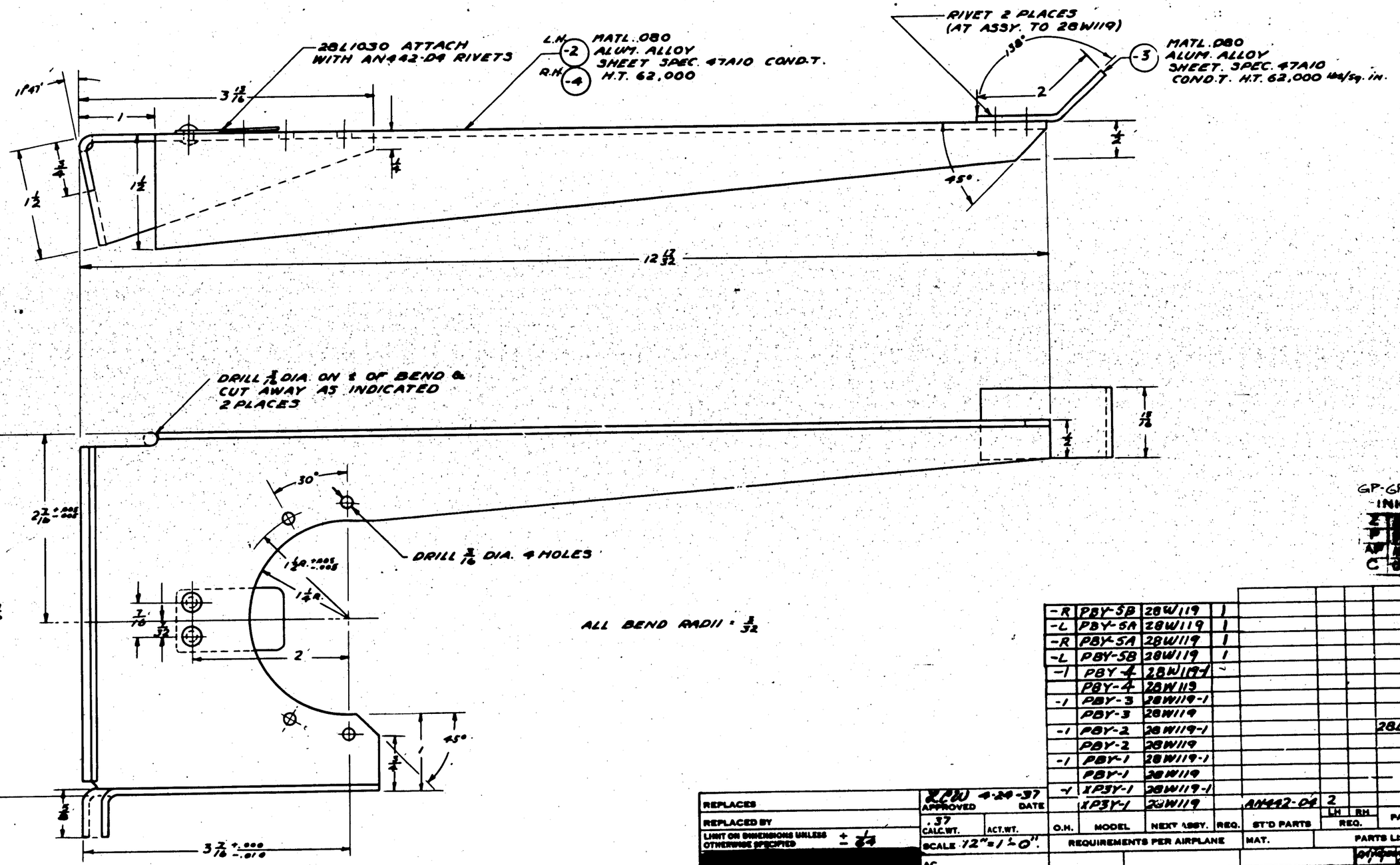

GP-GREEN PRIME
INISH CODE

-R	PBY-5B	28W119	1								
-L	PBY-5A	28W119	1								
-R	PBY-5A	28W119	1								
-L	PBY-5B	28W119	1								
-1	PBY-4	28W119-1	1								
	PBY-4	28W119									
-1	PBY-3	28W119-1									
	PBY-3	28W119									
-1	PBY-2	28W119-1							28L1030	1	1
	PBY-2	28W119									
-1	PBY-1	28W119-1									
	PBY-1	28W119							-3	1	1
-1	XP3Y-1	28W119-1							-4		1
	XP3Y-1	28W119		AN442-D4	2				-2	1	
O.H.	MODEL	NEXT ASSY.	REQ.	ST'D PARTS	LH REQ.	RH REQ.	PART NO.			LH REQ.	RH REQ.

REQUIREMENTS PER AIRPLANE		MAT.	PARTS LIST PER ASSY.
NOTED	NOTED	Z.P. GP	
SPEC.	HEAT TREAT	FINISH	DRAFT 4-10-37 CHECK 5-5-37 EXAM. 4-10-37 ENG.

REPLACES

REPLACED BY

LIMIT ON DIMENSIONS UNLESS OTHERWISE SPECIFIED ± 1/64

APPROVED 4-29-37 DATE

CALC.WT. .37 ACT.WT.

SCALE 12"=1'-0"

AC

NAVY NOTED

MATERIAL

CONSOLIDATED AIRCRAFT CORP. BUFFALO, N. Y.

STAMP PT. No. WHERE SHOWN

NAME
BRACKET-WING
STA-19. FLOAT RETRACT. MECH.

OPP. HAND 28W1067-1

SIZE D

28W1067

LET	SUPPLIES & EQUIPMENT CLASSIFICATION — ALTERATION	DATE	BY
C	TRACED	4-26-37	[illegible]
D	CHANGED "REAM THRU .499 +.000" TO .499 +.001 -.000. ADDED 1/2 DIM.	[illegible]	[illegible]
E	ADDED WELD NOTES	11-20-39	[illegible]
F	NOTE ADDED (BREWSTER	2-10-41	WATTS
G H	CHG DIMS ON FACE .980±.005 WAS .990 ; 1.380 WAS 1.20 ; .635 WAS 5/16	7-8-41	[illegible]
H	1.290 +.005 -.000 WAS 1.380 +.005 -.000 BRO'T. REQ'M'TS. UP TO DATE.	8-4-41	[illegible]

E.O. 29176
E.O. 398
EO 481
W.O. 8-4-41

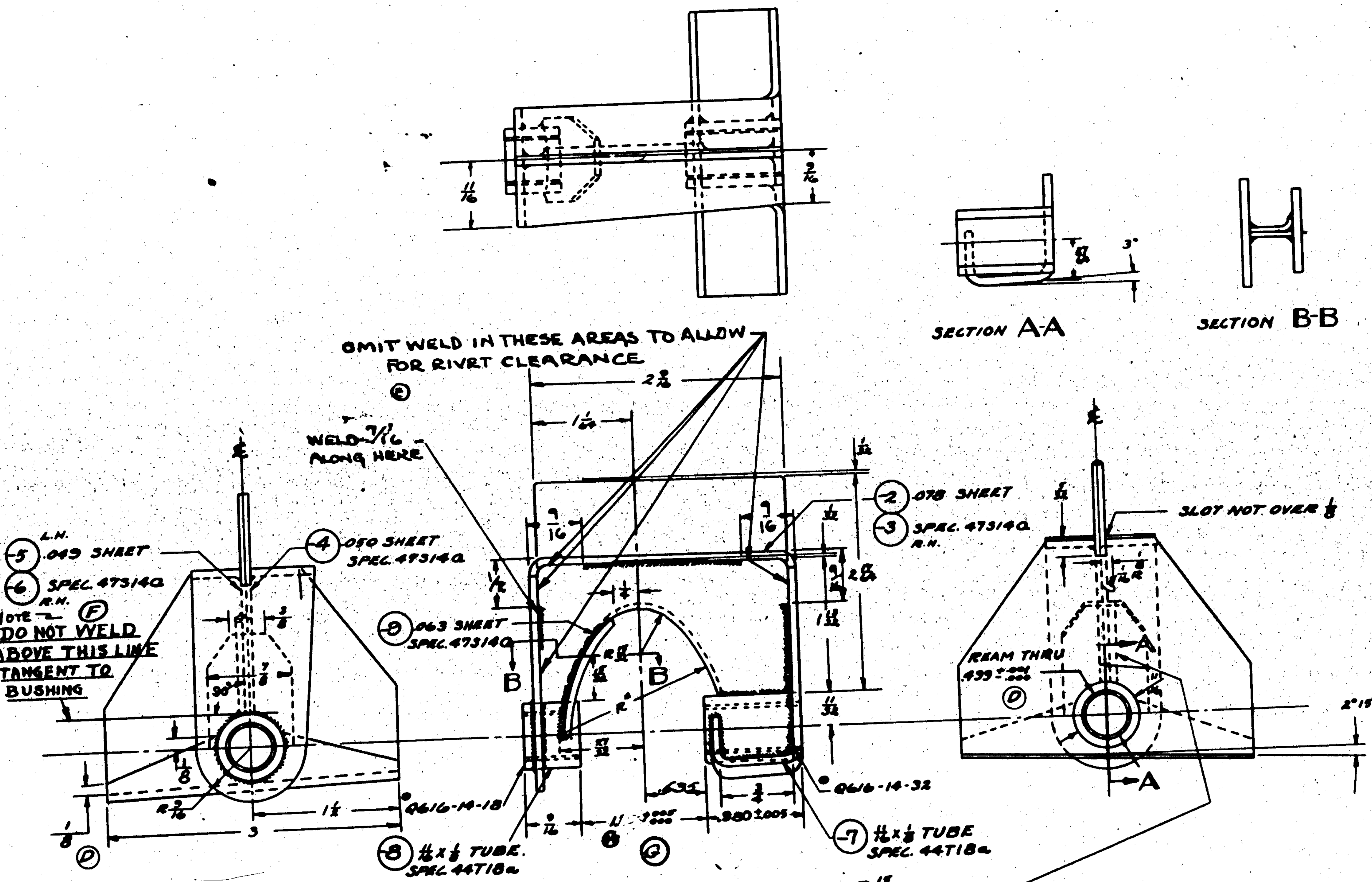

R° 1 11/16 APPROX. MUST RUN TANGENT TO R 15/32

• Q616-14-18 & Q616-14-32 ARE TO BE PRESSED INTO PLACE AFTER H.T. PLATING & PAINTING
WELD BOTH SIDES OF ASSY.

GP-GREEN PRIME
FI[illegible]

O.H.	MODEL	NEXT ASSY.	REQ.
-1	ALL 28-5's	28W020-1	1
-R	PBY-5B	28W020	1
	ALL 28-5's	28W020	1
-L	PBY-5B	28W020	1
-R	PBY-5A	28W020-1	1
-L	PBY-5A	28W020	1
-1	PBY-5	28W020-1	
	PBY-5	28W020	
-1	PBY-4	28W020-1	
	PBY-4	28W020	
-1	PBY-3	28W020-1	
	PBY-3	28W020	
-1	PBY-2	28W020-1	
	PBY-2	28W020	
-1	PBY-1	28W020-1	
	PBY-1	28W020	

REQUIREMENTS PER AIRPLANE

PARTS	LH	RH	LH	RH	LH	RH	LH
Q616-[illegible]2	1	1	1	1	1	1	
Q616-[illegible]8	1	1	1	1	1	1	
28W1135-9	1	1	1	1	1	1	
-8	1	1	1	1	1	1	
-7	1	1	1	1	1	1	
-6		1		1		1	
-5	1		1		1		
-4	1	1	1	1	1	1	1
-3		1		1		1	
28W1135-2	1		1		1		
	PBY-1		PBY-2		PBY-3		

MAT. — PARTS LIST PER ASSY.

REPLACES	28W135 & 135-1
REPLACED BY	
LIMIT ON DIMENSIONS UNLESS OTHERWISE SPECIFIED	±.010 & ±1/2°
APPROVED	[illegible]
DATE	4-26-37
CALC. WT.	.55
ACT. WT.	
SCALE	12" = 1'-0"
AC	
MATERIAL	NAVY CHR. MOL. SHT.
SPEC.	NOTED
HEAT TREAT	SH27b-3 190,000 lb/sq. in.
FINISH	C-2P-[illegible]-GP
DRAFT	4-23-35 [illegible]
CHECK	5-4-37 [illegible]
EXAM.	McLean
ENG.	

[illegible]

CONSOLIDATED AIRCRAFT CORP.
BUFFALO, N.Y.
STAMP PT. No. WHERE SHOWN

NAME: FITTING WING-FLOAT BRACE ATTACHMENT REAR

OPP. HAND 28W1135-1

D 28W1135

LET	ALTERATION	DATE	BY
	SUPPLIES & EQUIPMENT CLASSIFICATION		
B	TRACED	6-26-37	
C	ADDED WELD NOTES	11-20-40	
D	NOTE ADDED	2-14-41	WHITE
E	CHG. DIMS ON FACE .980±.005 WAS .990, 1.380 WAS 1.28, .635 WAS 5/8 REQ'TS PER AIRPLANE UP TO DATE		OWENS
F	CHG. DIM. TO 1.29 $^{+.005}_{-.000}$ WAS 1.380 $^{+.005}_{-.000}$	7-29-41	WHITE

Eo. 29176
E.O. 398
EO 401

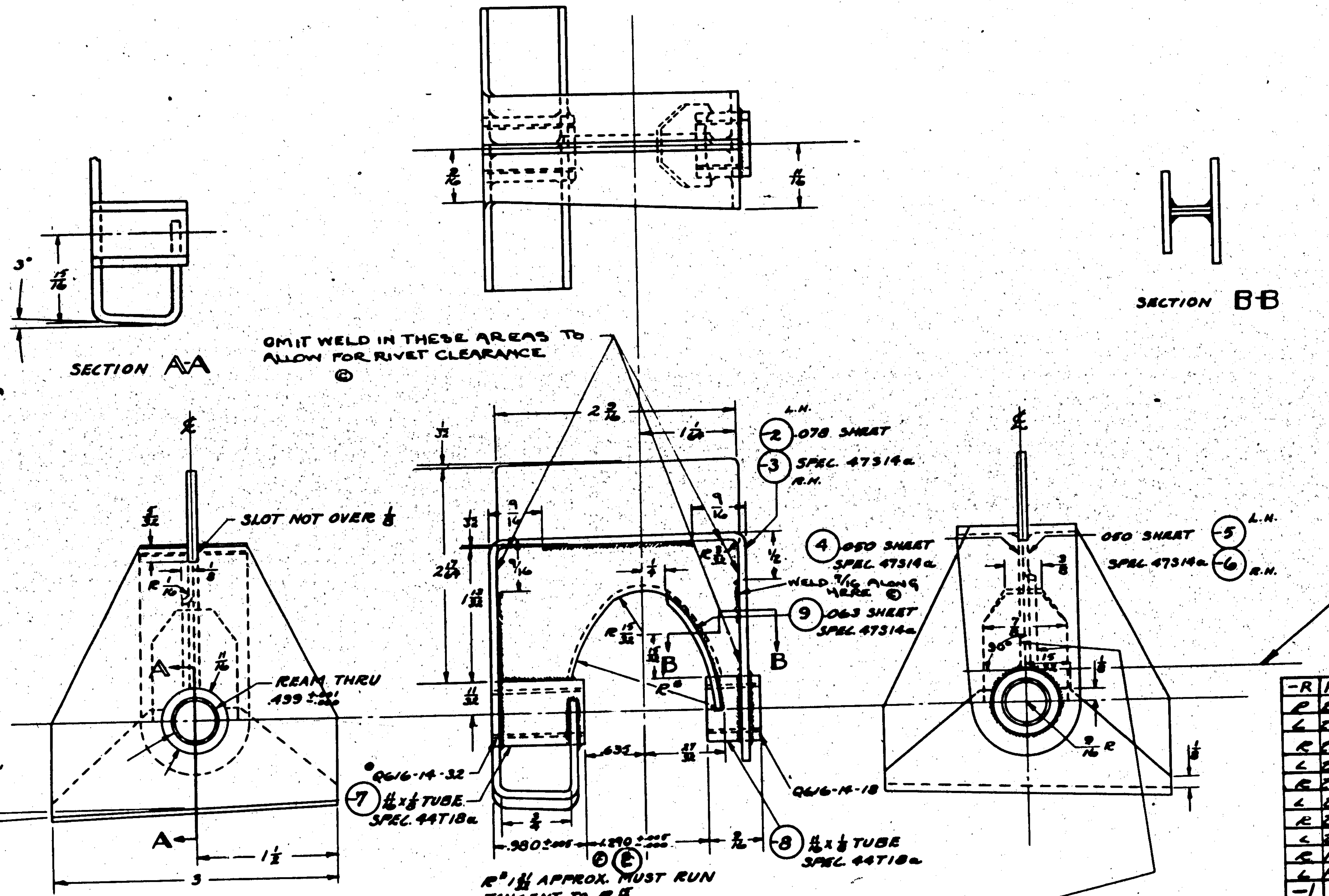

R^B 1 11/32 APPROX. MUST RUN TANGENT TO R 15/32

Q616-14-18 & Q616-14-32 ARE TO BE PRESSED INTO PLACE AFTER H.T. PLATING & PAINTING. WELD BOTH SIDES OF ASSY.

~ NOTE ~ (D)
DO NOT WELD ABOVE THIS LINE (TANGENT TO BUSHING)

GP-GREEN PRIME
FINISH [redacted]

O.H.	MODEL	NEXT ASSY.	REQ.
-R	PBY-5AE	28W020	1EA
R	28-5MN	28W020	1
L	28-5MN		1
R	28-5MC		1
L	28-5MC		1
R	28-5MA		1
L	28-5MA		1
R	28-5ME		1
L	28-5ME		1
R	PBY-5		1
L	PBY-5		1
-1	PBY-4	28W020-1	
	PBY-4	28W020	
-1	PBY-3	28W020-1	
	PBY-3	28W020	
-1	PBY-2	28W020-1	
	PBY-2	28W020	
-1	PBY-1	28W020-1	
	PBY-1	28W020	
-L	PBY-5A&B	28W020	1EA

REQUIREMENTS PER AIRPLANE

PARTS	PBY-1 LH	PBY-1 RH	PBY-2 LH	PBY-2 RH	PBY-3 LH	PBY-3 RH
Q616-14-32	1	1	1	1	1	1
Q616-14-18	1	1	1	1	1	1
28W1136-9	1	1	1	1	1	1
-8	1	1	1	1	1	1
-7	1	1	1	1	1	1
-6		1		1		1
-5	1		1		1	
-4	1	1	1	1	1	1
-3		1		1		1
28W1136-2	1		1		1	

MAT. — PARTS LIST PER ASSY.

REPLACES	28W136 & 136-1
REPLACED BY	
LIMIT ON DIMENSIONS UNLESS OTHERWISE SPECIFIED	±.010 & 1/2°
APPROVED	DATE 4-26-37
CALC. WT.	.60
ACT. WT.	
SCALE	12" = 1'-0"
AC	
NAVY	CHR. MOL. SHT.
MATERIAL	
SPEC.	NOTED
HEAT TREAT	150,000 lb/sq.in.
FINISH	C-2P-GP
DRAFT	11-22-35
CHECK	
EXAM.	
ENG.	
OPP. HAND	28W1136-1

[redacted]

CONSOLIDATED AIRCRAFT CORP.
BUFFALO, N. Y.
STAMP PT. No. WHERE SHOWN

NAME
FITTING WING - FLOAT BRACE ATTACHMENT FRONT

D 28W1136

SUPPLIES & EQUIPMENT CLASSIFICATION			
LET	ALTERATION	DATE	BY
C	TRACED UP TO DATE	1-17-38	DUNCAN

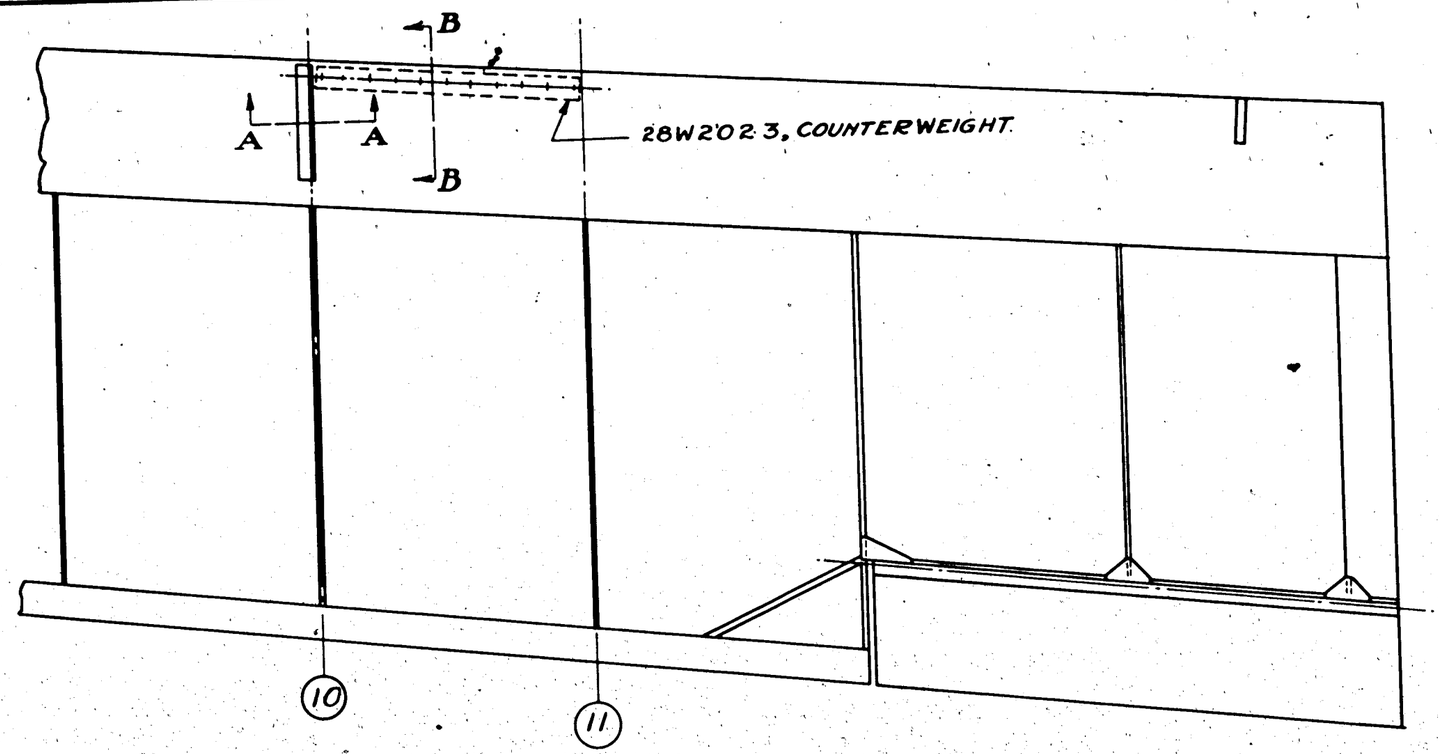

PLAN VIEW OF
PORT AILERON
28W2010

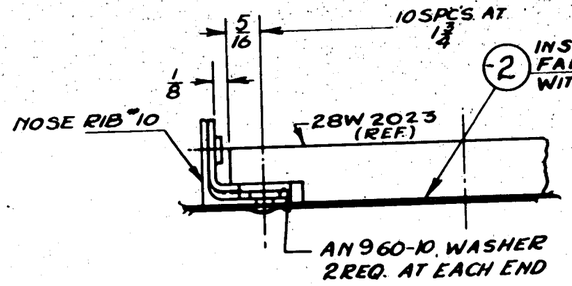
5/16
10 SPC'S AT 1 3/4
1/8
(2) INSULATE WITH FABRIC IMPREGNATED WITH BITUMASTIC PAINT
NOSE RIB #10
28W 2023 (REF.)
AN 960-10 WASHER 2 REQ. AT EACH END

VIEW A-A

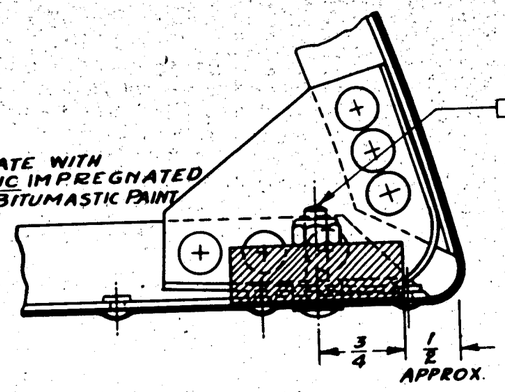

VIEW B-B

NOTE :- INBOARD END INSTALLATION,
AT STA. 11 IS SAME AS STA. 10

	PBY-5B	28W2010	1																
	PBY-5A	28W2010	1																
	PBY-4	28W2010	1	AN960-10	4														
	PBY-3	28W2010	1	AN520-10-14	11		28W2024-2	1											
	PBY-2	28W2010	1	AC365-1032	11		28W2023	1											
O.H.	MODEL	NEXT ASSY.	REQ.	ST'D PARTS	LH	RH	PART NO.	LH	RH	LH	RH	LH	RH	LH	RH	LH	RH	LH	RH
					REQ.			REQ.		REQ.		REQ.		REQ.		REQ.		REQ.	

REQUIREMENTS PER AIRPLANE — MAT. — PARTS LIST PER ASSY.

REPLACES	APPROVED	DATE
REPLACED BY	CALC. WT. 4.04 LBS.	ACT. WT.
LIMIT ON DIMENSIONS UNLESS OTHERWISE INDICATED ±	SCALE 1/8 FULL	

A C				9-23-37
NAVY				9-23-37
MATERIAL	SPEC.	HEAT TREAT	FINISH	DRAFT: E.G.D.E. / CHECK: I.L.W. / EXAM.: MOFFATT / ENG.

CONSOLIDATED AIRCRAFT CORP.
SAN DIEGO, CALIF.
STAMP PT. NO. WHERE SHOWN

NAME: INSTALLATION - WING - PORT AILERON - COUNTERWEIGHT

OPP. HAND

DWG. SIZE: D

28W2024

PART No.	A.	B.
28-W-2034	6 5/8	5/8
28-W-2034-2	8	1 1/8

SUPPLIES & EQUIPMENT CLASSIFICATION			
LET	ALTERATION	DATE	BY
A	TRACED	8-7-37	[redacted]
B	ADDED 28-W-2034-2	8-25-38	HRLY.

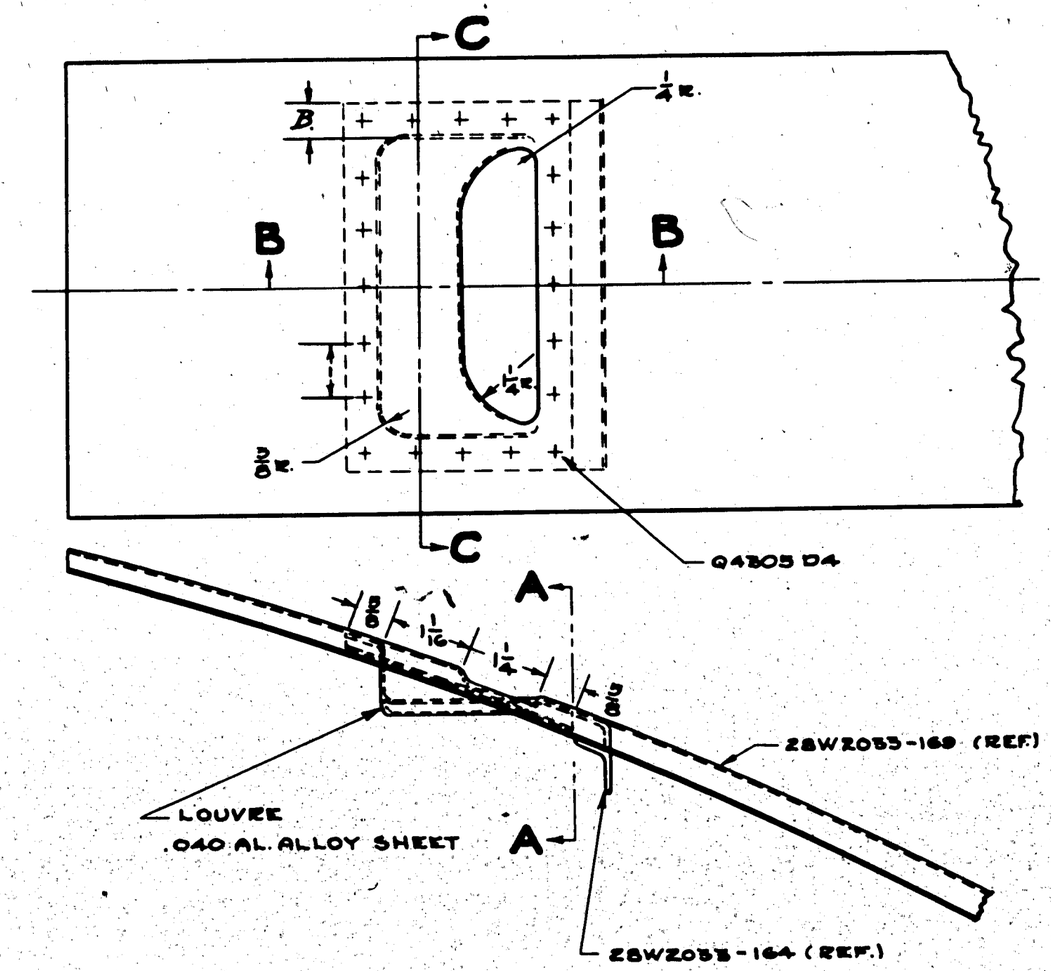

SECTION B-B

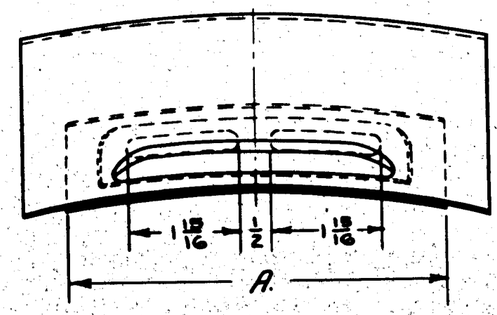

SECTION A-A

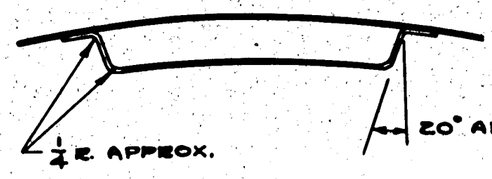

SECTION C-C

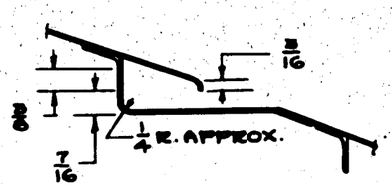

SECTION B-B

GP-GREEN PRIME

FINISH CODE	
Z	[redacted]
P	P-27 PRIMER
AP	ALUMINIZED PRIMER
C	CADMIUM PLATE

-2	PBV-5A168	28W3033	2							
	XPB2Y-1	29-W-591	4							
	XPB2Y-1	29-W-590	4							
-2	PBY-4	28-W-3033	2							
-2	PBY-5	28-W-3033	2							
	PBY-2	28W2033	2	04305D4						
O.H.	MODEL	NEXT ASSY.	REQ.	ST'D PARTS	LH REQ.	RH REQ.	PART NO.	LH REQ.	RH REQ.	

REPLACES

REPLACED BY

LIMIT ON DIMENSIONS UNLESS OTHERWISE SPECIFIED ± 1/32

[redacted]

APPROVED JCW DATE 8-7-37

CALC.WT. .02 ACT.WT.

SCALE 6"=1'-0"

AC

NAVY NOTED

MATERIAL

REQUIREMENTS PER AIRPLANE

MAT.

PARTS LIST PER ASSY.

4TA10 COMBA

SPEC.

SR55 COMAT

HEAT TREAT

Z-P-2 GP

FINISH

DRAFT	CHECK	EXAM.	ENG.
8-16-37		9-2-37	

CONSOLIDATED AIRCRAFT CORP. BUFFALO, N. Y.

STAMP PT. No. WHERE SHOWN

NAME LOUVRE - WING - NACELLE - UPPER

OPP. HAND NONE

SIZE D

28W2034

SULLIVAN-SCHEIBLER CO., INC., BUFFALO
ENGINEERING TRACINGS DEPT.

SUPPLIES & EQUIPMENT CLASSIFICATION			
LET	ALTERATION	DATE	BY
E	TRACED	1/31/38	[redacted]
F	5/16 WAS 3/16 ON DWG—PER E.O. [illegible]	8-11-41	[redacted]
G	ADDED DIMS 1/8, 3/4, 7/16, 1 1/2, & SECTION AA WT. CHG. NEG.	11-13-42	[redacted]

E.O.C.# 11378

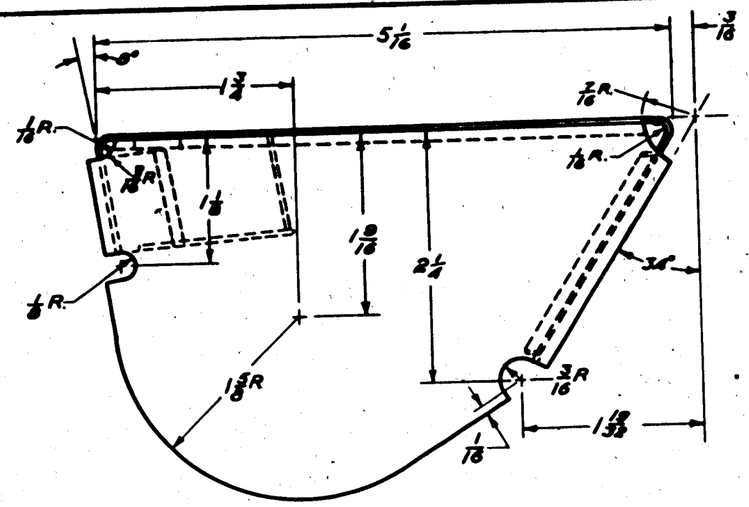

END VIEW

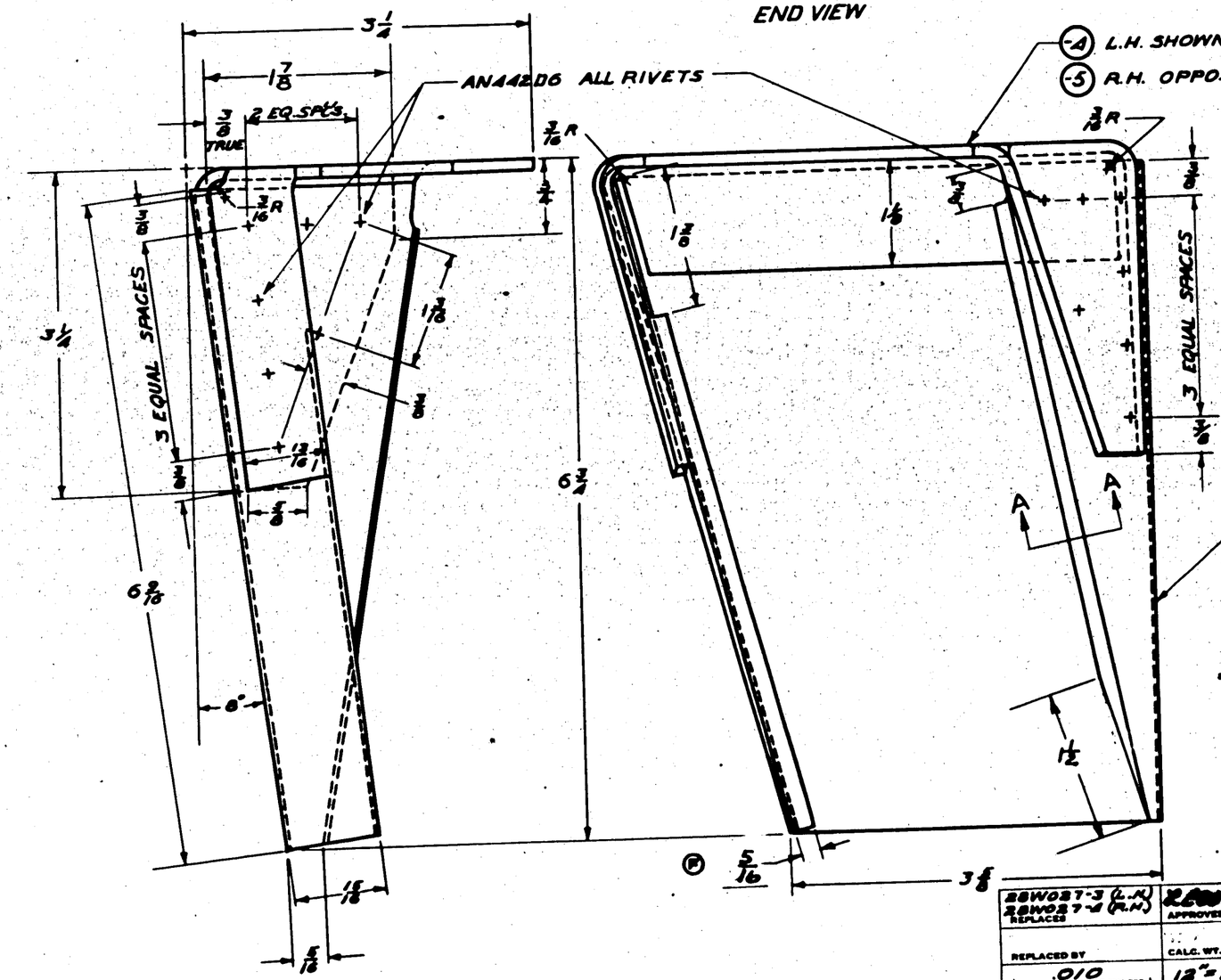

(-4) L.H. SHOWN
(-5) R.H. OPPOSITE
} .128 AL. ALLOY SH'T. - SPEC. 47A10 (COND. A)

SECTION AA

(-2) L.H. SHOWN
(-3) RH. OPPOSITE
} .064 AL. ALLOY SH'T. - SPEC. 47A10 (COND. A)

6P-GREEN PRIME
FINISH CODE

Z	[redacted]
P	[redacted]
M	[redacted]
C	[redacted]

O.H.	MODEL	NEXT ASSY.	REQ.	ST'D PARTS	LH	RH	PART NO.	LH REQ.	RH REQ.	LH REQ.	RH REQ.	LH REQ.	RH REQ.	LH REQ.	RH REQ.
	REQUIREMENTS PER AIRPLANE			MAT.	PARTS LIST PER ASSY.										
-1	PBY-5	28W027	1												
	PBY-5A	28W027	1												
-1	PBY-5	28W5159	1												
	PBY-5A	28W5159	1												
-1	PBY-5	28W027	1 EA												
	PBY-5A	28W027	1 EA												
-1	PBY-5	28W5027	1 EA												
	PBY-5A	28W5027	1 EA												
-1	PBY-5	28W027	1												
	PBY-5	28W027	1												
-1	PBY-4	28W027-4	1												
	PBY-4	28W027-4	1												
-1	PBY-3	28W027-3	1												
	PBY-3	28W027-3	1												
-1	PBY-2	28W027-11	1												
	PBY-2A	28W027-10	1	AN442D6			28W3027-2	1							
							-5		1						
							-4	1							
							-3		1						
							-2	1							

*25 (not shown)
*13 (not shown)
*1-12
*1-20

AC			
NAVY NOTED	NOTED	3R33A	Z-P-2 6P
MATERIAL	SPEC.	HEAT TREAT	FINISH

DRAFT	CHECK	EXAM.	ENG.
Swan 2/24/39		MOF MAT	

28W027-3 (L.H.) REPLACES 28W027-4 (R.H.)
APPROVED [redacted] DATE 1/20/39
REPLACED BY
CALC. WT. ACT. WT.
.010 LIMIT ON DIMENSIONS UNLESS ± OTHERWISE SPECIFIED
12"=1'0" SCALE

CONSOLIDATED AIRCRAFT CORP. SAN DIEGO, CALIF.
STAMP PT. NO. WHERE SHOWN

NAME FITTING — WING — FRONT STRUT ATTACHMENT

OPP. HAND 28W3027-1

DWG. SIZE D

28W3027

* SUPPLIES & EQUIPMENT CLASSIFICATION			
LET	ALTERATION	DATE	BY
D	TRACED	2-8-38	[redacted]
E	RIVET 1/4 W/A3 2 1/16 FLANGE 3/16	8-2-41	Lyons
F	ADDED 2.14 DIM. TO FLANGE. NEC.	4-20-43	Barnes
	WT. CHG.		

ENG.-41377
E.O. 80136

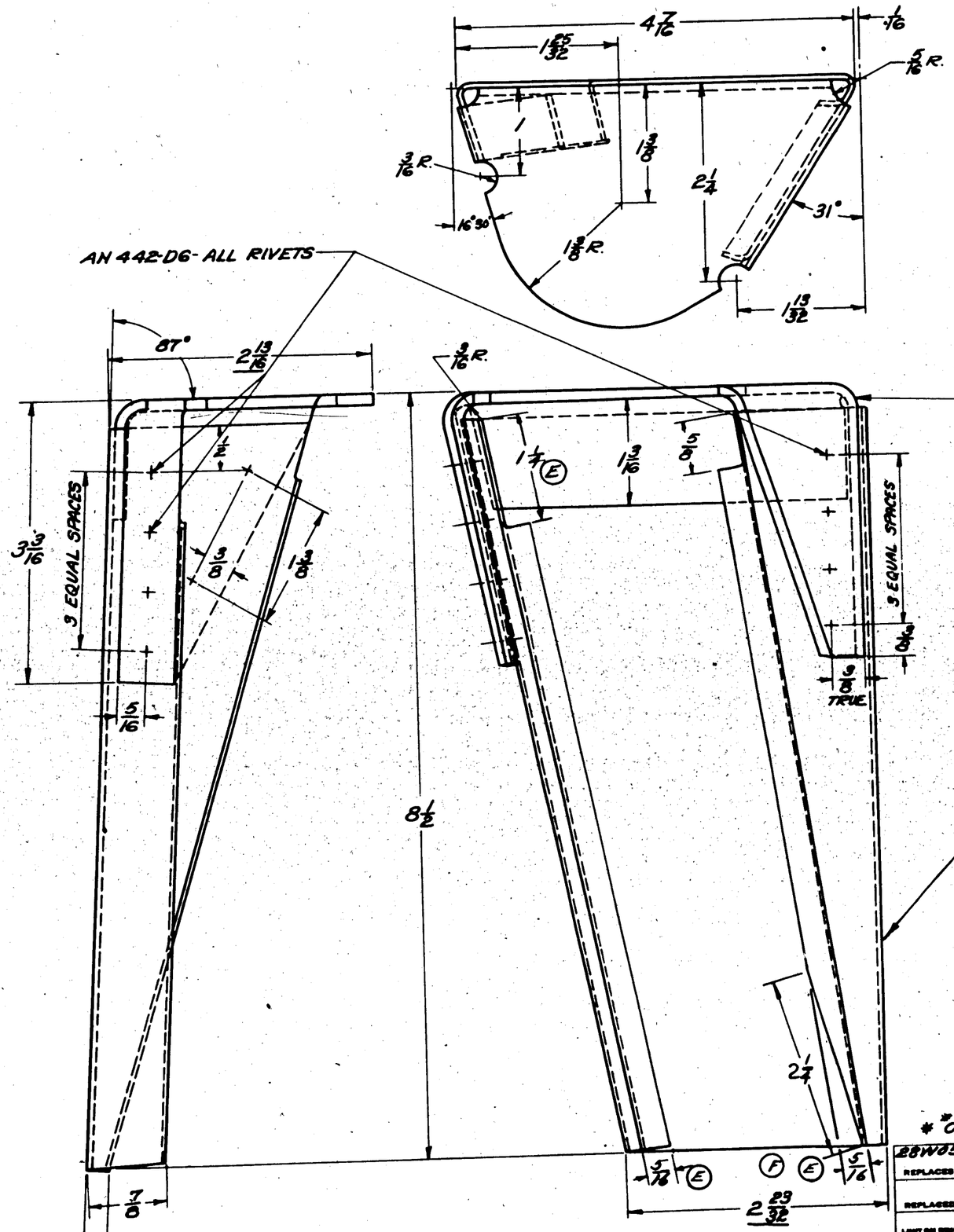

(4) L.H. SHOWN
(5) R.H. OPPOSITE
.128 AL. ALLOY SH'T. (24S)
SPEC. 47A10 (COND. A)

(-2) L.H. SHOWN
(-3) R.H. OPPOSITE
.064 AL. ALLOY SH'T. (24S)
SPEC. 47A10 (COND.A)

GP-GREEN PRIME
FINISH CODE

Z	[redacted]		
P			
AP			
C			

-2-R	28-SNN	28W5057	1EA
-2-A	PBY-5	28W057	1EA
-2-R	PBY-5B	28W5057	1EA
	28-SNN	28W4257	1 4/A
	PBY-5A	28W5057	1 4/A
	28-SANK	28W5057	1 4/A
	28-SMC	28W4257	1 4/A
	28-SMA	28W5057	1 4/A
	28-SME	28W5057	1 4/A
	PBY-5	28W4257	1 4/A
-1	PBY-4	28W057-11	
	PBY-4	28W057-10	
-1	PBY-3	28W057-11	
	PBY-3	28W057-10	
-1	PBY-2	28W057-11	
	PBY-2	28W057-10	

1 TO 24

12 & ON
24 & ON

* 0497 & ON

O. H.	MODEL	NEXT ASSY.	REQ.	ST'D PARTS	LH REQ.	RH REQ.	PART NO.	LH REQ.	RH REQ.	LH REQ.	RH REQ.	LH REQ.	RH REQ.	LH REQ.	RH REQ.
				AN442D6			28W3057-2	1							
							-5		1						
							-4	1							
							-3		1						

REQUIREMENTS PER AIRPLANE	MAT.	PARTS LIST PER ASSY.

28W057-3 LH. & -4 RH.	APPROVED	DATE
REPLACES	K A W	2-8-38
REPLACED BY	.57 CALC. WT.	ACT. WT.
LIMIT ON DIMENSIONS UNLESS OTHERWISE SPECIFIED .010 ±	12" = 1'-0" SCALE	

A C					
NAVY NOTED	NOTED	SR 53 COND. T	Z-P-2 AP GP	3-3-37	
MATERIAL	SPEC.	HEAT TREAT	FINISH	DRAFT	CHECK / EXAM. / ENG.

DRAFTSMAN: WILSEY | CHECKER: [illegible] | ENGINEER: R.

OPP. HAND 28W3057-1

CONSOLIDATED AIRCRAFT CORP. SAN DIEGO, CALIF.
STAMP PT. NO. WHERE SHOWN

NAME: FITTING-WING-REAR STRUT ATTACHMENT

DWG. D SIZE | 28W3057

SUPPLIES & EQUIPMENT CLASSIFICATION			
LET	ALTERATION	DATE	BY
B	TAILCAP	8-1-37	[illegible]
C	28F1041-7 WAS 28F1041. NO WT. CHG.	10-22-42	[illegible]

A5500B

REAM .3125 +.000 -.002 THRU SKIN, SAW REINF. SPAR FLANGE & 2 (REF.)

AN5-7A BOLT AN960-0516 WASHER WHEN HOIST IS NOT IN USE

AN425-06

© 28E1041-7 BLOCK FINISH: E.G.P.

PLAN VIEW

℄ STA. 2

2 9/16 APPROX

ENG. HOIST LUG (REF.)

⑫

INSULATE BLOCK FROM SPACER WITH MARINE GLUE & FABRIC. - ALLOW FABRIC TO PROTRUDE 1/4 IN AT EDGES.

1/8 x 1/2 x 1 1/2 24 ST AL. AL. SPACER - SPEC. 1TA10 COND. T.

REAR SPAR ℄

SIDE VIEW

OUTBOARD

REAR VIEW

DETAIL B

DETAIL C (OPPOSITE)

REAM .3125 +.000 -.002 THRU SKIN & SPAR FLANGE

ENG HOIST LUG (REF.)

ANS-7A BOLT AN960-D516 WASHER WHEN HOIST IS NOT IN USE.

REAR SPAR ℄

INSULATE BLOCK FROM SPAR WITH MARINE GLUE & FABRIC - ALLOW FABRIC TO PROTRUDE 1/4 IN. AT EDGES.

SIDE VIEW

© 28F1041-7 BLOCK FINISH: E.G.P.

AN425-06

2 1/2 APPROX

PLAN VIEW

℄ STA. 6

OUTBOARD

REAR VIEW

DETAIL A

DETAIL D (OPPOSITE)

AIRPLANE ℄

℄ FRONT SPAR

℄ STA. 6

℄ STA. 2

℄ STA. 2

℄ STA. 6

2 1/16 (REF.)

2 7/16 (REF.)

2 7/16 (REF.)

2 1/16 (REF.)

REAR SPAR ℄

SEE DETAIL A

SEE DETAIL B

SEE DETAIL C

SEE DETAIL D

INSTALLATION PLAN VIEW

FINISH
GP GREEN PRIMER

O.H.	MODEL	NEXT ASSY.	REQ.	ST'D PARTS	LH REQ.	RH REQ.	PART NO.	LH REQ.	RH REQ.
	28-5AMN	28W5555	1						
	PBY-5B	28W4155	1						
	28-5AMC	28W5556	1						
	28-5MN	28W5555	1						
	28-5MB	28W4155	1						
	28-5MC	28W5556	1						
	28-5MA	28W4155	1						
	PBY-5A	28W8005	1	AN425-06	-				
	PBY-5	28W8005	1	AN960-D516	4				
	PBY-5	28W4005	1	AN5-7A	4		28W4035	R	
	PBY-4	28W4005					28F1041-7	4	

REQUIREMENTS PER AIRPLANE | MAT. | PARTS LIST PER ASSY. . . .

SPEC.	HEAT TREAT	FINISH
—	—	NOTED

MATERIAL

AC
NAVY —

REPLACES
REPLACED BY
LIMIT ON DIMENSIONS UNLESS OTHERWISE SPECIFIED ± 1/32

APPROVED [illegible] DATE 2-13-39
CALC. WT. .19 ACT. WT.
SCALE 18"=1'0"

84 (ON #1-85)

CONSOLIDATED AIRCRAFT CORP. BUFFALO, N.Y.
STAMP PT. No. WHERE SHOWN

NAME
INSTALLATION ENGINE HOIST TAPPING BLOCK

DRAFT | CHECK | EXAM. | ENG.

OPP. HAND

DWG. No. 28W4035

E.O. 26771

LET	ALTERATION	DATE	BY
A	ADDED MATERIAL & NOTE "PART SYM."	11-[illegible]	[illegible]
B	REMOVED: 1" DIM. 15 3/4 WAS 15 1/16. 7 7/8 WAS 7 27/32. NO WT. CHG.	8-25-43	[illegible]

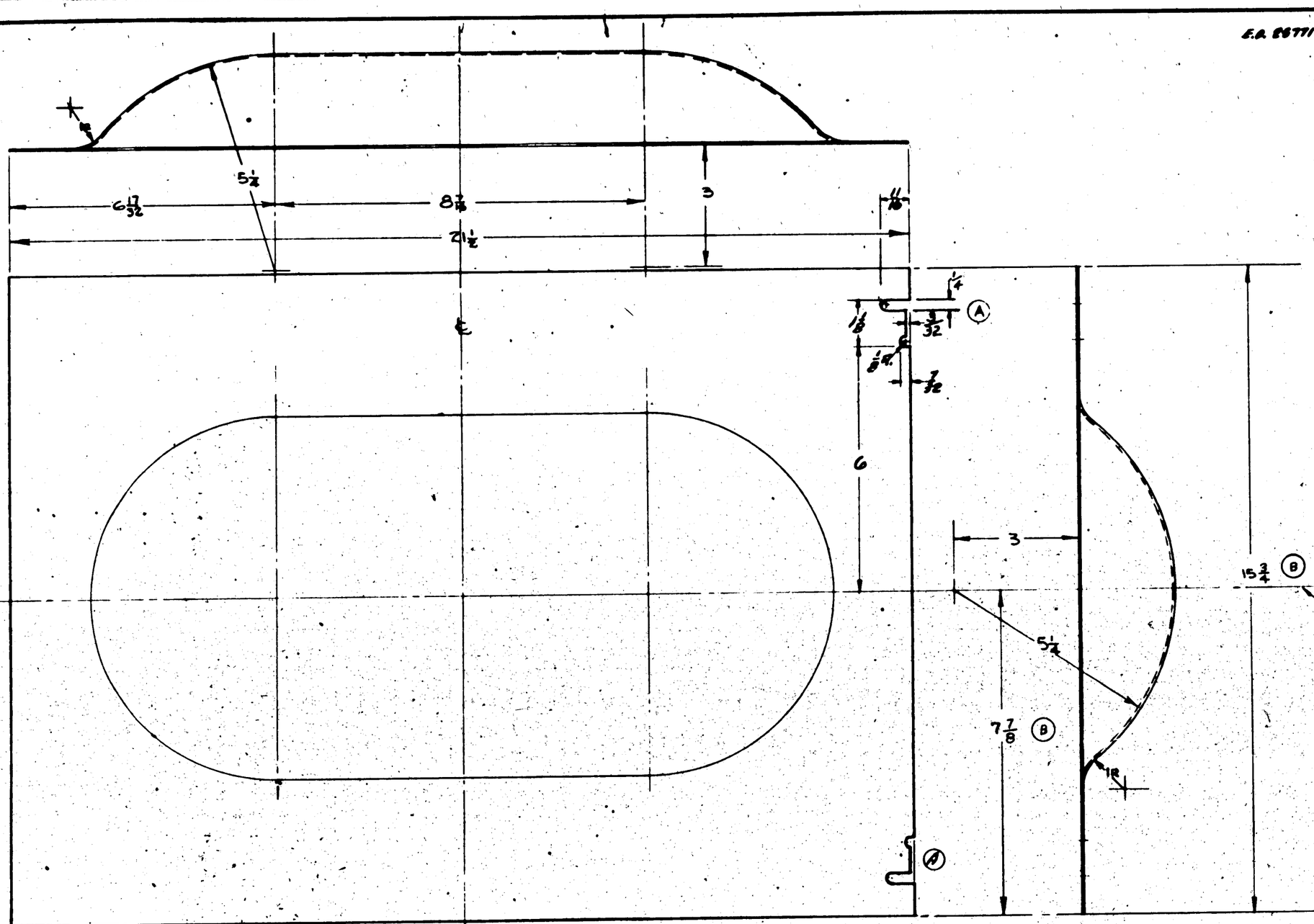

FINISH CODE:

Z	ANODIC TREATMENT
P	P-27 PRIMER
AP	ALUMINIZED PRIMER
C	CADMIUM PLATE

ASSY DASH No.	MODEL	NEXT ASSY	QTY
	28-5 A.M.	28W5016	2 EA
	28-5 U.S.N.	28W5016	2 EA
	PBY-5A	28W5016	2
	PBY-5B	28W5016	2
	PBY-5	28W5016	2

REQUIREMENTS PER AIRPLANE

REPLACES — CALC WT.

REPLACED BY — ACT. WT.

LIGHT ON DIMENSIONS UNLESS OTHERWISE SPECIFIED: ± 1/32

SCALE: 6 IN. = 1 FT. 0 IN.

STAMP PART NUMBER WHERE SHOWN

PART No.	STOCK	MATERIAL	SPEC.	LH REQ.	RH REQ.	LH REQ.	RH REQ.	LH REQ.	RH REQ.	LH REQ.	RH REQ.	LH REQ.
-1	.071 EX 20 X 76	ALLOY 2010	4 PAINT CONDS									
		PARTS LIST PER ASSY.		-0		-2		-3		-4		-5-

AC

NAVY SPEC COND T — Z-P

HEAT TREAT — FINISH

KEY-40 LETTERING

DRAFT — CHECK — STRUCT. — MAT — APPROV. — ENG.

NAME WELL-WING-LANDING LIGHT LEAD EDGE-CENT. SECT. OUTER

OPP. HAND

CONSOLIDATED AIRCRAFT CORP. SAN DIEGO, CALIF.

DWG SIZE D — 28W5006

28W5006

LET	ALTERATION	DATE	BY
A	BASIC [illegible] W-8	7-29-41	[illegible]
B	REVISED AN960-D8		
D	77 1/8 WAS 10 1/8 ON 1ST BAG ONLY	3/10/42	AVEC
E	PICTURED NEW TYPE BAG, ADDED 12 & 6, REVISED NEXT ASSY	2-20-42	HOPKINS
F	REDESIGNED BAG & SUB 28W3008 FOR 28W3358 IN B/M	7-17-42	SWEENEY

VIEW OF TANK BOTTOM

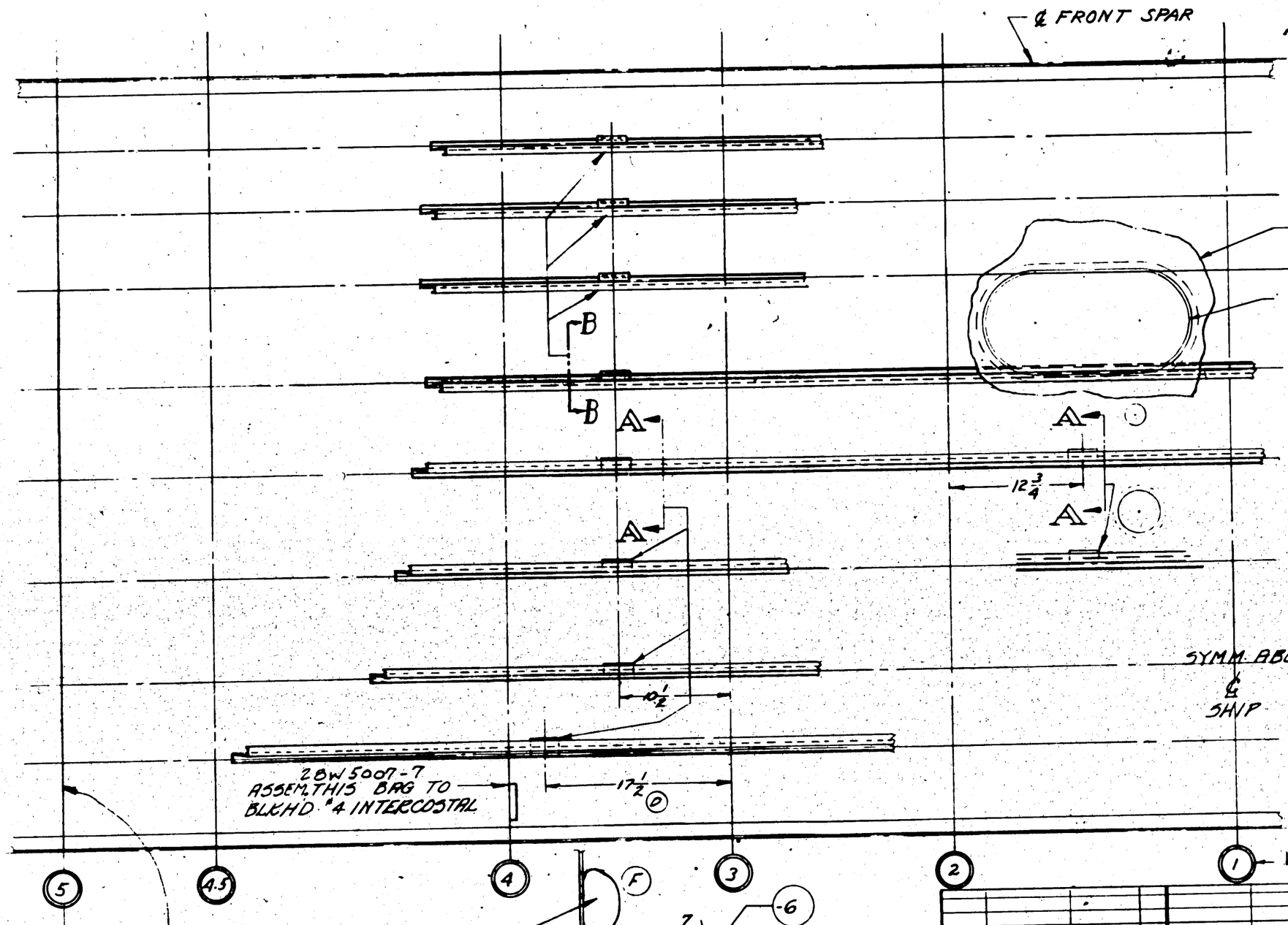

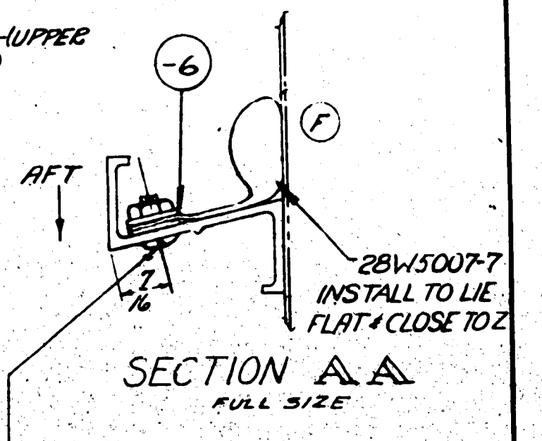

SECTION AA
FULL SIZE

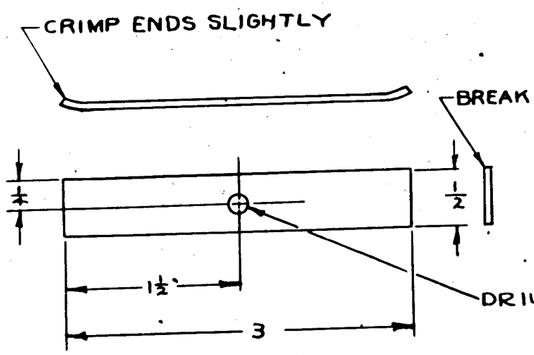

DETAIL -6
12" = 1'0"

SECTION B-B
FULL SCALE

ASSY. DASH NO.	MODEL	NEXT ASSY	QTY
-6	PBY-5A	28W5018	14
-6	PBY-5B	28W5018	14
	28-5 ANC	28W5005	1
	28-5-NC	28W5005	1
	PBY-5A	28W5005	1
	PBY-5	28W5005	1

REQUIREMENTS PER AIRPLANE

REPLACES — CALC. WT.

REPLACED BY — ACT. WT.

SCALE 1 1/2" = 1FT 0 IN

STAMP PART NUMBER WHERE SHOWN

PART No.	STOCK	MATERIAL	SPEC.	LH REQ. -0	RH REQ. -0	LH REQ. -2	RH REQ. -2	LH REQ. -3	RH REQ. -3	LH REQ. -4	RH REQ. -4	LH REQ. -5	RH REQ. -5
AN515-D8-10				22									
AC365-D832				22									
28W5007-7													
28W5007-10													
28W5008-6	.064 x 5/8 x 3 1/8	ALC. SHEET	9783 (CONO 1)	14		9		22					

PARTS LIST PER ASSY.

A C				5/14/42					
NAVY NONE	Z-P (-6 ONLY)	STEP							
HEAT TREAT	FINISH	DRAFT	CHECK	STRUCT.	MAT	APPROV	ENG.		

Z	ANODIC TREATMT.
P	P-27 PRIMER
AP	ALUMINIZED PRIMER
C	CADMIUM PLATE

NAME INSTALLATION - CORROSION INHIBITOR

OPP. HAND

CONSOLIDATED AIRCRAFT CORP. SAN DIEGO, CALIF.

DWG D SIZE 28W5008

LET	ALTERATION	DATE	BY
A	-- -6 & -3 TO BE DRILLED 1/4		
	-- -6 & -3 TO BE REAMED IN NOTE #1	10/1/40	[illegible]
B	DRILL NOTE IN -6 & -13 .1935 WAS #11 (.191)	12/9/40	LITTLE
C	ADDED NOTE TO FACE OF DRWG.	5-8-41	[illegible]
D	-6 REQ. REMOVED FROM R.H. -6 ASS'Y. ADDED TO REQ'MTS. PER AIRPLANE	9-18-41	[illegible]
E	IN REQTS PER AIRPLANE: ADDED -6 FOR 28-5AMN WITH NEXT ASS'Y 28W5040, 2 REQ.	4-4-42	Shearer

E.O. 28048
PBY-5 E.O. A2358
E.O. A24384
PBY-5, PBY-5A
OA-10 A28-5's.
E.O. A26625

SECTION B-B 12"=1'0"

3/8, 3/4, 1/32, 3/8, 17/32

(17) NEOPRENE

15 25/32 TO ℄ REAR SPAR

28W005-108 STR (REF)

1 9/32

B

1/2 R

12 9/16

1R

5/8

7 1/8

1 7/8

(9) TAP. STRIP
(10) RED FIBER

TAP. STRIP (11)
RED FIBER (12)

(6) .064 DOOR

(7) RED FIBER

(8) TAPPING STRIP

A

Q4305-DG

5/8

28W005-108 STR (REF)

(13) .072 REINF.

(-18) REINF. FRAME SUB ASSEM.

1 1/4

STA 4

STA 3

FWD.

VIEW LOOKING UP AT LOWER SURFACE OF WING

Q5103-4 INSERT WITH SEALUBE

1 1/8, 1/32, 5/16, 5/16, 3/8, 3/8, 2 13/32

NEOPRENE (15)
NEOPRENE (16)
1/32 NEOPRENE (14) ALL AROUND LEDGE

SECTION A-A 12"-1'0"

JIG SCREW HOLES FOR INTERCHANGEABILITY

NOTE: THIS INSTALLATION TO BE MADE ON NAVY SHIPS 2289-2291 INCL. TO FURNISH PARTS FOR NAVY SERVICE INSTALLATION FOR SHIPS 2289, 2291-2293 INCL & 2301 TO 2323 INCL. (27 SHIPS.)

1. DRILL THRU TAPPING STRIPS & FIBER #22457) REMOVE FIBER & TAP-8-9 & -11-#10-32-NF3 SCREW HOLES THRU -6 & -13 TO BE DRILLED .1935. NOTE! DO NOT TAP FIBER
2. TIE TAPPING STRIPS TO -13 WITH AN425-D3 RIVETS SPACED AT ENDS OF STRIPS & @ 1 1/4 BETWEEN SCREWS
3. FILL GAP BETWEEN DOOR & SKIN WITH ZINC CHROMATE PASTE AFTER FINAL DOOR INSTALL.

FINISH COL.	
Z	ANODIC TREATMENT
P	P-27 PRIMER
AP	ALUMINIZED PRIMER
C	CADMIUM PLATE

ASSY DASH NO.	MODEL	NEXT ASSY.	REQ
-R	PBY-5	28W5043	1
-L	PBY-5	28W5043	1
-6	28-5AMN	28W5040	2
-6	28-5ME, MN	28W5040R	1 EA.
-6	28-5MA, MC		1 EA.
-6	PBY-5, PBY-5A	28W5040R	1 EA.
-6	28-5ME, MN	28W5040L	1 EA.
-6	28-5MA, MC		1 EA.
-6	28-5AMC		1 EA.
-6	PBY-5, PBY-5A	28W5040L	1 EA.
R	PBY-5	28W5005	1
L	PBY-5	28W5005	1

#1 TO 27 ON
#36 ON

REQUIREMENTS PER AIRPLANE

REPLACES
REPLACED BY
CALC. WT.
ASY. WT.
SCALE 2"=1'0" & NOTED
STAMP PART NUMBER WHERE SHOWN

PART No.	STOCK	MATERIAL	SPEC.	LH REQ.	RH REQ.	LH REQ.	RH REQ.	LH REQ.	RH REQ.	LH REQ.	RH REQ.
AN425-D3											
-17	1/32 x 1/2 x 10 1/8	NEOPRENE	N11	2							
-16	1/32 x 1/2 x 5 3/4	NEOPRENE	N11	2							
-15	1/32 x 1/2 x 7	NEOPRENE	N11	2							
-13	.072 x 8 3/4 x 15	ALC. SHT.	4A18 (CONDT)	1							
-12	1/16 x 3/8 x 7	FIBRE	ITPS-FBG-FIBER	2							
-11	M7604 x 7		46A9 T	2							
-10	1/16 x 3/8 x 10 1/8		ITPS-FBG-FIBER	2							
-9	M7604 x 5 3/4		46A9 T	2							
-8	M7604 x 10 1/8		46A9 T	2							
28W5012-7	1/16 x 3/8 x 10 1/8	HARD FIBER		2							
PARTS ASSEMBLED ON -18 SUB-ASSEMBLY REINF. FRAME				4	4						
Q5103-4				1	1						
28W5042-18	SUB-ASSY. REINF. FRAME			1	1						
-14	1/32 x 8 3/4 x 15	NEOPRENE	N11	1							
-6	.064 x 7 1/4 = 12 5/8	ALC. SHT	4A18 (CONDT)								

PARTS LIST PER ASSY.

D.C.		Hobey			
NAVY NONE	Z-2P	6-6-40			
HEAT TREAT	FINISH	DRAFT	CHECK	STRUCT.	MAT

NAME INSTALL.-ACCESS DOOR-FUEL CELL COUPLING-LOWER SURF WING

CONSOLIDATED AIRCRAFT CORP. SAN DIEGO, CALIF.

OPP. HAND 28W5012R

DWG. D SIZE 28W5012

LET	ALTERATION	DATE	BY
A	1st Rev. Rem. Pipin & Repl. with "noted". Added Mat'l. Note. Rem. Note "Make from .030 AL. Alloy Sheet, 24ST. Spec. #7A10 Cond. T. Mfg. Int. Chg.	7-26-44	[illegible]

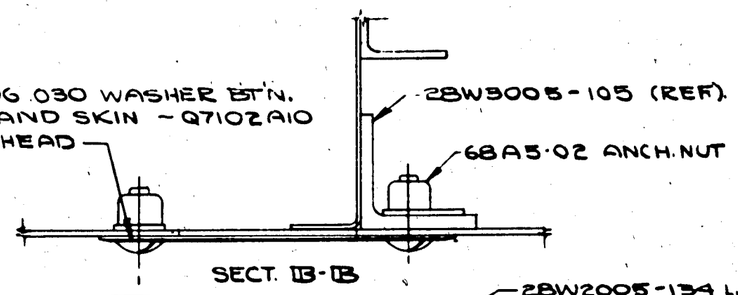

SECT. B-B

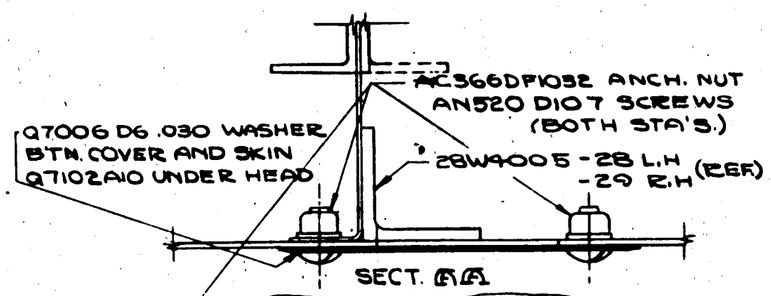
AC366DF1032 ANCH. NUT
AN520 D10 7 SCREWS (BOTH STA'S.)
Q7006 DG .030 WASHER BTN. COVER AND SKIN Q7102A10 UNDER HEAD
28W9005-28 L.H. -29 R.H. (REF)

SECT. A-A

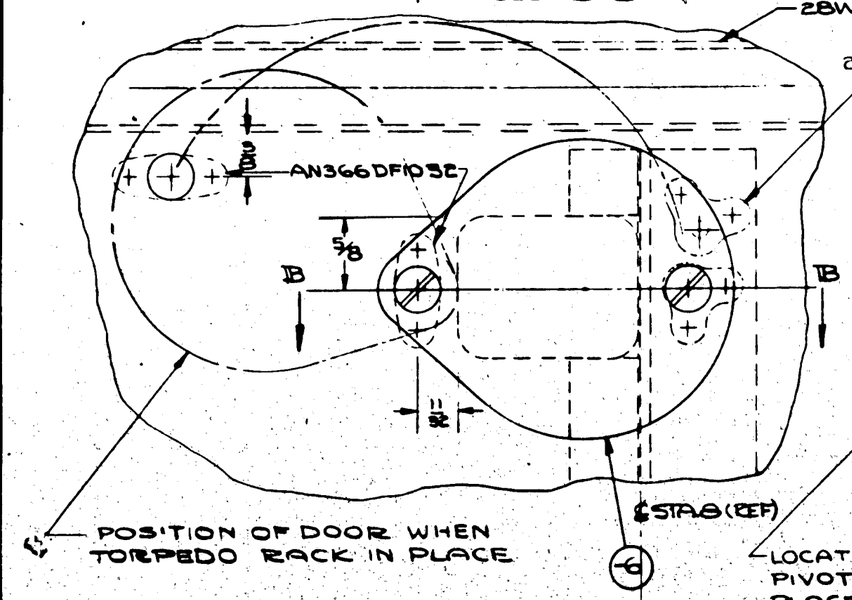

DETAIL B

INSTALLATION OF HOIST HOLE COVER AT STATION-8
VIEW IS UP AT LOWER SURFACE

INBOARD

LOCATE THIS ANCHORNUT AFTER PIVOT NUT AND SCREW ARE IN PLACE BY SWING OF COVER ~ BOTH STA'S. PLUG WITH AN520D10-7 SCREW WHEN DOOR IS CLOSED

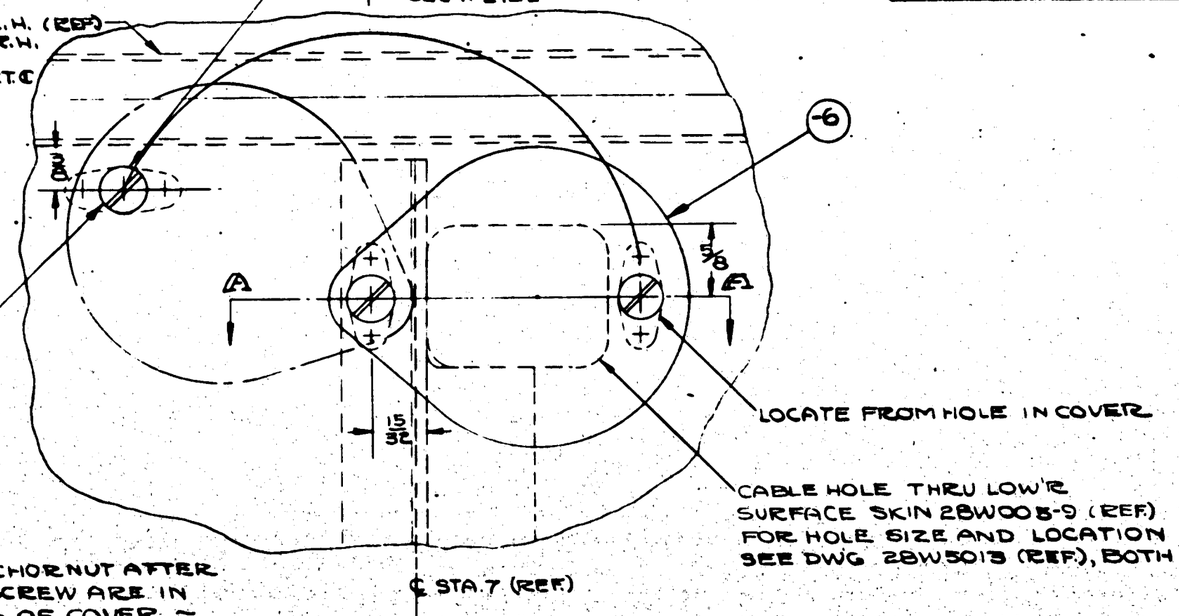

DETAIL A

INSTALLATION OF HOIST HOLE COVER AT STATION 7
VIEW IS UP AT LOWER SURFACE

INBOARD

NOTE: RIVET AN442 D3 FLUSH THRU OUTSIDE SKIN, ALL ANCHOR NUTS.

Ⓐ MATERIAL NOTE:
-6 MAY BE MADE FROM
(A) .030 AL. AL., SPEC. 47A10, COND T, FIN. Z-P-2 AL, OR,
(B) 3/64 LAM. PHENOLIC, SPEC. [illegible]

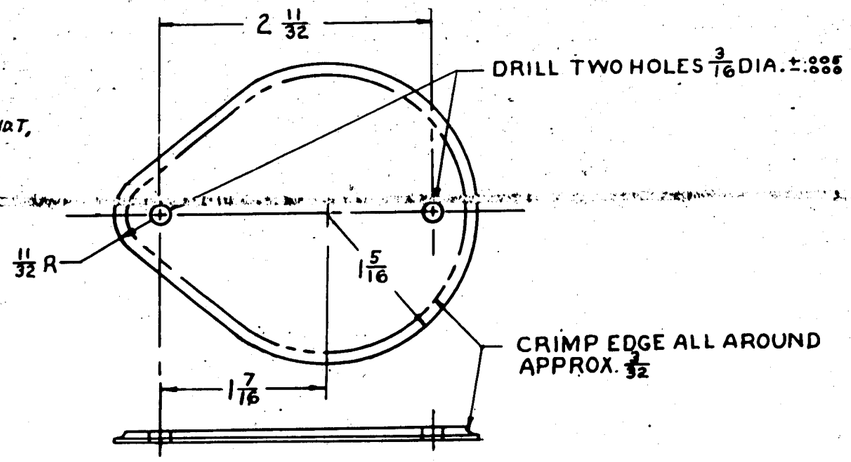

Ⓐ DETAIL OF -6 (REF.)

#36 & ON
#1-35

ASSY DASH NO.	MODEL	NEXT ASSY	REQ
	PBY-5	28W5005	1
	28-5AMC	28W5555	1
	28-5AMM	28W5555	1
	28-5MC	28W5555	1
	PBY-5A	28W5005	1
	PBY-5	28W4005	1

REQUIREMENTS PER AIRPLANE

REPLACES — Calc. Wt.

REPLACED BY — Act. Wt.

LIMIT DIMENSIONS UNLESS OTHERWISE SPECIFIED: ± 1/32 X/Y — SCALE FULL

STAMP PART NUMBER WHERE SHOWN

PART NO	STOCK	MATERIAL	SPEC.	LH RH REQ. -0	LH RH REQ. -2	LH RH REQ. -3	LH RH REQ. -4	LH RH REQ. -5
	AC366DF1032							10
	68A5-02							2
	AN520D107							12
	Q7102A10							4
	Q7006DG.030							4
-6	.080 x 3 x 3½	24ST	47A10 T					4

PARTS LIST PER ASSY.

AC			5-7-40					
NAVY NOTED	@ NOTED				Bruce	8/12/40	8/14/40	
HEAT TREAT	FINISH		DRAFT	CHECK	STRUCT	MAT'L	APPROV	ENG.

NAME INSTAL.-COVER-TORPEDO HOIST HOLE ~ STA'S 7 & 8

OPP. HAND

CONSOLIDATED AIRCRAFT CORP. SAN DIEGO, CALIF.

DWG. D 28W5023

SIZE

28W5023

LET	ALTERATION	DATE	BY
J	REPLACED -7 CHAMFER NOTE WITH BREAK NOTE (NO WT CHG)	8-8-42	Shearer
K	ADDED 28-5AMN REQTS (NO WT CHG)	11-12-	Shearer

LET	ALTERATION	DATE	BY
A	ADDED -9 GASKET	9-1-41	Bellows
B	AN525-10-6 WAS AN526-10-6	9-1-41	Bellows
	NOTE: "USE 28W5012-6 DOOR---INTEGRAL TANKS---" WAS "USE 28W5063-6---"	9-1-41	Bellows
C	REPLACED -8 WITH -11 AND ADDED [illegible]	9-30-41	Williams
D	ADDED REMARK FOR PBY-5B, 28-5AMN AND 08-10	"	"
E	CHANGED NOTE & PICTURE FOR RIVETS IN THIS AREA. ADDED REINF. PLATE AT END OF DOOR FROM C'SK. INTERIOR TO BRAZIER HD. ON INSIDE & MOD. MUSHROOM HD ON OUTSIDE. CHANGED AN426 D3 RIVETS TO Q4305-D3 AT ENDS OF DOOR.	10-24-41	Williams
F	ADDED CONTRACT #77713-P & 88476 TO NOTE OVER "BOM FOR 28W5063 DOOR"	11-27-41	Williams
G	ADDED -12 SUB-ASS'Y TO DES & BOM CHGD. Q4305-D8 RIVETS AT ENDS OF DOOR TO AN426-D3 & ADDED TO NOTE "C'SK. BOTH SIDES - SHOP HD. IN -6" CHGD. NOTE FOR AN426-D3 RIVETS UNDER PLAN VIEW WAS "C'SK. HD. BOTH SIDES NEW C'SK. HD. IN -7"	12-9-41	Williams
H	REMOVED CONTRACT #88476 FROM NOTE! "28W5063 DOOR TO BE FURNISHED FOR ALL SHIPS UNDER CONT. #7696 & C-7713-P" & REM'D REQTS FOR PBY-5B & 28-5AMN	12-19-41	Williams

DIMENSIONS ARE TO CUTOUT IN SKIN

$12\frac{9}{16}$ — $\frac{1}{4}$

28W005-108 STRG'R, REF

LOWER WING SKIN, REF

-10 NEO. REF.

$15\frac{25}{32}$ TO ℄ R.S., REF

$1\frac{9}{32}$

$\frac{9}{16}$

$7\frac{1}{8}$

4

$\frac{5}{16}$ RAD.

A — A

1" RAD (REF)

USE 28W5012-6 DOOR WITH INTEGRAL TANKS
USE 28W5063 DOOR WITH FUEL CELLS ONLY

9 EQUAL SPCS @ 7/8 APPROX.

$\frac{5}{8}$ (REF)

TAPPING PLATE -7

-12 SUB-ASS'Y.

$\frac{1}{2}$ RAD.

(REF) $\frac{5}{8}$

-6 PLATE

-11 FIBER GASKET

E AN425-D3 IN THIS AREA (7 PLACES EA. END OF DOOR) C'SK. BOTH SIDES - SHOP HD. IN -6

B — B

22 EQUAL SPACES @ 5/8 APPROX.

VIEW LOOKING UP AT LOWER SURFACE OF WING

℄ STA. 4

28W005-108 (REF.)

AN425-D3 THRU TAPPING PLATE, FIBRE, & -6 ~ 26 PLACES. C'SK. G HEAD IN -7.

Eq. # A15787 PBY-5, 5A, 5B OA-10 #28-5

-6 PLATE (REF)
-11 GASKET (REF)
-7 PLATE (REF)
28W5012-6 DOOR (REF.)
} -12 SUB-ASS'Y (REF)

SECTION A-A
SCALE: 12"=1'-0"

E 3/16 RIVETS IN THIS AREA (9 PLACES EACH END OF DOOR) TO BE BRAZIER HD. ON INSIDE & MOD. MUSHROOM HD. ON OUTSIDE.

J BREAK THIS EDGE ALL AROUND

Q71C2-A10

-9 GASKET

A AN525-10-6 (ALL SCREWS) INSERT WITH THREAD-LUBE

$\frac{5}{16}$ (REF) — $\frac{5}{16}$ (REF) — $\frac{3}{8}$ — $\frac{3}{8}$

E

C WING SKIN, REF

-10 NEO.

$1\frac{1}{4}$ — $1\frac{1}{8}$

$2\frac{13}{32}$

Q4305-D6

SECTION B-B 12"=1'0"

℄ STA. 3

H F NOTE: 28W5063 DOOR TO BE FURNISHED FOR ALL SHIPS UNDER CONTRACT #7696-C (S.O. 936-76), C-7713-P (S.O. 949-42) ONLY.

AT SCREW LOCATIONS SEE 28W5012-6
1. DRILL #22 (.157) THRU TAPPING PLATE AND TAP #10-32 NF3 #1-27 mcl
2. DRILL GASKET #22 (.157)
3. DRILL #11 (.191) 64 PLACES IN -6.

PBY-5 #36 AN

ALL SCREW HOLES TO BE JIG DRILLED

DO NOT TAP GASKET

R	28-5-AMN	28W5556	1
L	28-5-AMN	28W5555	1
ASSY	MODEL	NEXT ASSY	REQ

PART NO	STOCK	MATERIAL	SPEC.	LH REQ. -0	RH REQ. -2	LH REQ. -3	RH REQ. -4	LH REQ. -5	RH REQ.
28W5063R	SEE NOTE								1
28W5063L								1	
Q4305-D6						64	64		
Q7102-A10						64	64		
AN525-10-6						64	64		
28W5012-6						1	1		
AN426-D3									
28W5040-11	1/16 x 7 1/8 x 12 3/16	NEOPRENE	COMM						
-7	.125 x 9 1/4 x 15 1/4	ALC. 24 ST	4748-T						
-6	.064 x 7 1/8 x 13	ALC. 24 ST	4748-T						
28W5040-9	SUB-ASSY								
28W5040-10	1/32 x 9 1/4 x 15 1/4	NEOPRENE	COMM						
28W5040-9	1/32 x 7 1/8 x 12 3/16	NEOPRENE	COMM						
28W5040-12	SUB-ASSY.								

PARTS LIST PER ASSY.

REPLACES 28W5012 — CALC. WT.
REPLACED BY — ACT. WT.
SCALE 6"=1'-0" FULL
1/32
STAMP PART NUMBER WHERE SHOWN

A.C. — NAVY —
HEAT TREAT — FINISH

DRAFT	CHECK	STRUCT	MAT	APPROV	ENG.
9-22-41	9-22-41	9-23-41	JCH		

NAME INSTALL - ACCESS DOOR FUEL CELL MANIFOLD-LWR SURF-WING

CONSOLIDATED AIRCRAFT CORP. SAN DIEGO, CALIF.

OPP. MANO. 28W5040R

SIZE D — 28W5040

E.O. A62105A

LET	ALTERATION	DATE	BY
A	D/M. 1/4 WAS 4 & D/M 4 WAS 6 3/4. WT. CHG. NEG.	11-13-42	

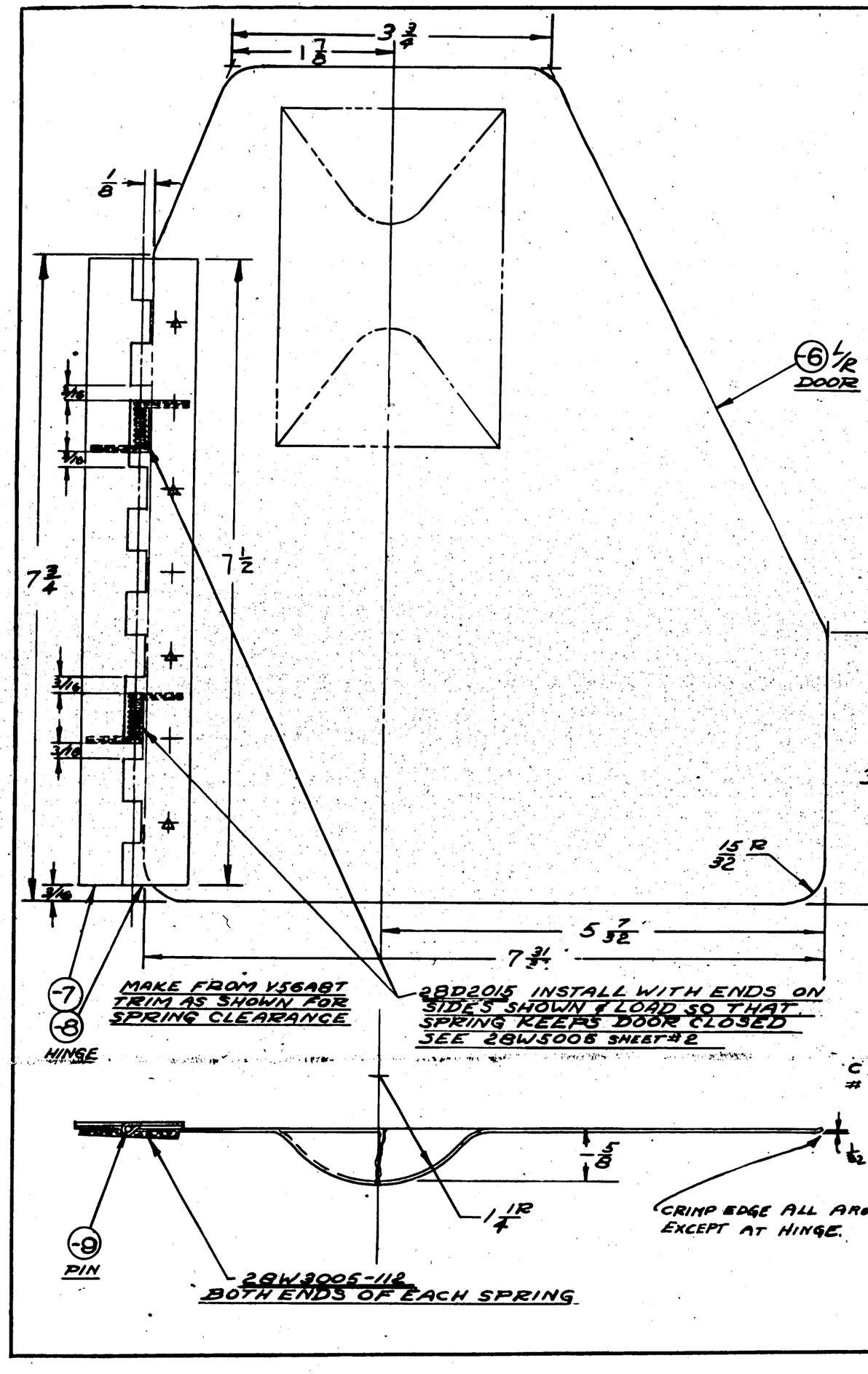

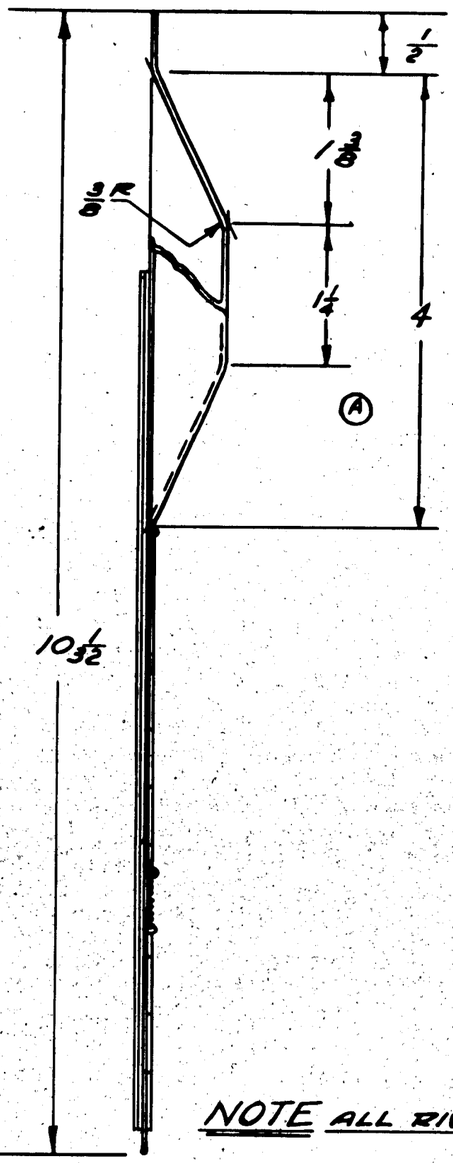

NOTE ALL RIVETS TO BE TYPE Q4305-A04

ASSY. DASH NO.	MODEL	NEXT ASSY.	QTY.
R	PBY-5	28W5006	1
L	PBY-5	28W5005	1

REQUIREMENTS PER AIRPLANE

REPLACES — CALC WT. .176

REPLACED BY — ACT. WT.

SCALE 12"=1'-0"

LIGHT OR DIMENSIONS UNLESS OTHERWISE SPECIFIED ± 1/32

STAMP PART NUMBER WHERE SHOWN

PART No	STOCK	MATERIAL	SPEC.	LH REQ. -0	RH REQ. -0	LH REQ. -2	RH REQ. -2	LH REQ. -3	RH REQ. -3	LH REQ. -4	RH REQ. -4	LH REQ. -5	RH REQ. -5
PARTS LIST PER ASSY.													
Q4305-A04										4	4		
28W3003-112										2	2		
28D2015										2	2		
-9	Ø.80 DIA x 7 1/2	ST. STL. WIRE	AN-QQ-W423 COND B							1	1		
-8	V56 A8T x 7 1/2									1	1		-
-7	V56 A8T x 7 1/2									1	1		
-6R	.030 x 9	ALC 24ST	4TA9-T								1		
-6	.030 x 9	ALC 24ST	4TA9-T							1			

AC		MOD LETT							
NAVY	Z-P	9-1-42							
HEAT TREAT	FINISH	DRAFT	CHECK	STRUCT	MAT	APPROV	ENG.		

NAME ACCESS DOOR ASS'Y- WING - LOWER SURFACE - STA. 9 FWD

OPP. HAND - R

CONSOLIDATED AIRCRAFT CORP. SAN DIEGO, CALIF.

DWG. SIZE D

28W5046

R

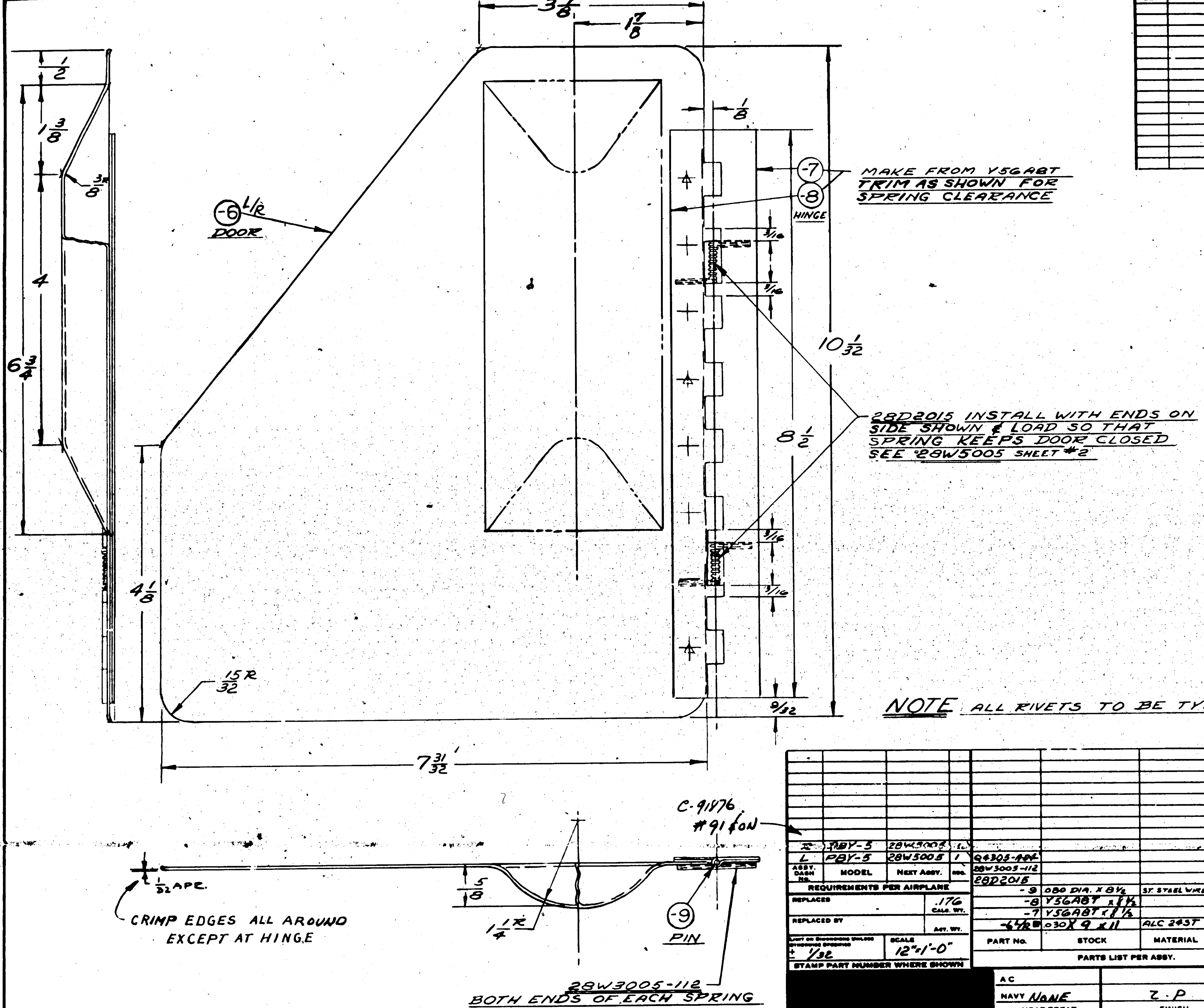

NOTE ALL RIVETS TO BE TYPE Q4305-AD4

LET	ALTERATION	DATE	BY

ASSY. DASH No.	MODEL	NEXT ASSY.	REQ.
R	PBY-5	28W5005	1
L	PBY-5	28W5005	1

REQUIREMENTS PER AIRPLANE

REPLACES	.176 CALC. WT.
REPLACED BY	ACT. WT.

LIMIT ON DIMENSIONS UNLESS OTHERWISE SPECIFIED	SCALE
± 1/32	12"=1'-0"

STAMP PART NUMBER WHERE SHOWN

PART No.	STOCK	MATERIAL	SPEC.	-0 LH REQ.	-0 RH REQ.	-2 LH	-2 RH	-3 LH	-3 RH	-4 LH	-4 RH	-5 LH	-5 RH
Q4305-AD4													
28W3005-112				4	4								
28D2015				2	2								
-9	.080 DIA. X 8 1/2	ST. STEEL WIRE	AN-QQ-W-423 COND. B	1	1								
-8	Y56ABT X 8 1/2			1	1								
-7	Y56ABT X 8 1/2			1	1								
-6 L/R	.030 X 9 X 11	ALC 24ST	47ABT	1	1								

PARTS LIST PER ASSY.

AC		MOFFETT					
NAVY NONE	Z.P	9-1-42				9-7-42	
HEAT TREAT	FINISH	DRAFT	CHECK	STRUCT	MAT	APPROV	ENG.

NAME ACCESS DOOR ASS'Y WING LOWER SURFACE STA#10 FWD

OPP. HAND -R

DWG. SIZE D 28W5047

CONSOLIDATED AIRCRAFT CORP. SAN DIEGO, CALIF.

R

LET	ALTERATION	DATE	BY
A	ADDED .250 +.010 -.005 DIM. 1/4 MIN. RAD NOTE		
B	CHANGE DIM. B TO 1 7/16 WAS 1 1/2 ALSO CHANGE 1/4 MIN. RAD TO 5/16		
C	CHANGE .250 +.010 -.005 TO .240 +.010 -.000 ALSO CHANGE .065 +.005 -.000 TO .059 +.007 -.008 ALSO ADD SECT. B-B. 4 PLACES CHM'L WAS 1/2	9-25-41	
D	CORRECTED INCORP. OF E.O.'s: CORRECTED + ALARGED PICTURE	7-8-41	HALSEY
E	CHG'D DIMS. ON END VIEWS; -6, 1 7/8 WAS 1 1/2, 1 7/32 WAS 1.473 ADDED 1 3/32, REMOVED .027; -7, 1 11/32 WAS 1.379, 1 3/16 WAS 1 7/16, ADDED 1 3/32, REMOVED .058. 5/16 R (2) ADDED	4-8-42	SAUNDERS
F	ADDED IN: B/M - 8 7/8 AS ALTERNATES TO -6 5/8 & -7 1/8 RESPECT. NO WT. CHG.	6-10-42	[illegible]
G	CHG: FORGING OUTLINE CHG B/M TO READ: -7R 28W5026-BR; -7L 28W5026-BL; -6R 28W5026-BR; -6L 28W5026-BL	8-12-42	[illegible]

E.O. 22178

E.O. 22178A

E.O. 22160 REV-C

E.O. A20644

E.O. A36184

5/16 R. ON CUT

1 3/4 FLAT

DO NOT SHARPEN THIS RADIUS WITH CUTTER.

.240 +.010 -.000

.059 +.007 -.008

1 3/4 FLAT

5/16 R.

DO NOT SHARPEN THIS RADIUS WITH CUTTER

5R 7/16

1 7/16

1 15/32

1 15/32

1 15/32

3/32 (REF)

3/8

6R SHOWN

6L OPPOSITE

7L SHOWN

7R OPPOSITE

20

12" = 1'-0"

6"

.500 ±.001

6"

.500 ±.001

1/16

3/4 +1/32 -0

SECT. B-B
12" = 1'-0"

OUTLINE OF MILLER CUTTER

B

B

3/8

1"

15/16

3/8

1

3/8

SPOTFACE 1/2 DIA
4 PLACES

DRILL 7/8" DIA.

1 7/16 (REF)

E

1 3/32

1 27/32

6 1/32

FINISH CODE	
Z	ANODIC TREATMENT
P	P-27 PRIMER
AP	ALUMINIZED PRIMER
C	CADMIUM PLATE

-7R	PBY-5B	28W5057L	1
-7L	PBY-5B	28W5057R	1
-6R	PBY-5B	28W5057R	1
-6L	PBY-5B	28W5057L	1
-7R	PBY-5A	28W5057L	1
-7L	PBY-5A	28W5057R	1
-6R	PBY-5A	28W5057R	1
-6L	PBY-5A	28W5057L	1
-7L	PBY-5	28W5057L	1
-7L		28W5057R	1
-6R		28W5057R	1
-6L	PBY-5	28W5057L	1

ASSY. DASH NO.	MODEL	NEXT ASSY	REQ
REQUIREMENTS PER AIRPLANE			
REPLACES		CALC WT.	
REPLACED BY		ACT WT.	
SCALE: 6"-1'-0" UNLESS NOTED			
STAMP PART NUMBER WHERE SHOWN			

PART NO.	STOCK	MATERIAL	SPEC.	LH REQ.	RH REQ.	LH REQ.	RH REQ.	LH REQ.	RH REQ.	LH REQ.
PARTS LIST PER ASSY.				-0	-2	-3	-4	-5	-6	-7
-7R	28W5026-BR									
-7L	28W5026-BL									
-6R	28W5026-BR									
-6L	28W5026-BL									

AC		Halsey	[illegible]	[illegible]	[illegible]
NAVY	Z-P	4-15-41	5-14-41	5-24-41	[illegible]
HEAT TREAT	FINISH	DRAFT	CHECK	STRUCT.	MAT.

NAME FITTING-WING-OUTER REAR STRUT ATTACH.-MACHINED

OPP. HAND

CONSOLIDATED AIRCRAFT CORP. SAN DIEGO, CALIF.

DWG. SIZE D

28W5056

-6 5/8	28-5AMN	28W5057	1 EA.
-7 1/8	28-5AMN		1 EA.
-6 5/8	28-5AMC		1 EA.
-7 1/8	28-5AMC		1 EA.
-6 5/8	28-5MC		1 EA.
-7 1/8	28-5MC		1 EA.
-6 5/8	28-5ME		1 EA.
-7 1/8	28-6ME		1 EA.
-6 5/8	28-5MN		1 EA.
-7 1/8	28-6MN		1 EA.
-6 5/8	285MA		1 EA.
-7 1/8	28-6MA	28W5057	1 EA.

ASSY. DASH NO.	MODEL	NEXT ASSY	REQ

* 125 ON

* 124 ON

LET	ALTERATION	DATE	BY
A	6 1/2 WAS 7 15/16, 3 1/2 WAS 3 5/16, 1/2 R WAS 5/8 R	10-8-41	[illegible]
B	ADDED NOTE TO STAMP "SAMN" 2 PLACES & FILLISTER HEAD SCREW-6 PLACES. PLANES ON SHAFT 90 & 270 DEGREES	11-25-41	[illegible]
C	IN "PARTS/AIRPLANE" BLANK ADDED 28W5063-13 PER DRAWING ON SHEET NO. 2 (-2). 28W5065-5 TO 28W5065-13 IN NOTE "TO BE JIG DRILLED FOR INTERCHANGEABILITY WITH 28W5065-13". 28W5065-13	12-10-41	[illegible]
D	-7 & -8 WERE ON OPPOSITE SIDE OF DOOR	2-11-42	[illegible]
E	REMOVED CHAMFER EDGES & NOTE FROM -6. ADDED BREAK NOTE	4/9/42	[illegible]
F	IN PARTS PER AIRPLANE: ADDED -7 & -8 MS-SAMN UNDER SHROUD ..CHG. IS FROM 15 PARTS TO 19 PARTS PER PART ASSY. 28W5065	6-8-42 6-9-42	[illegible]
G	IN REQ/PLANE BLK FOR N.A. 28W6032-0A99Y & REQ. WAS 16 REQ. NO WT. CHG.	9-28-43	ARSING
H	IN B/M FOR -8, MAT & SPEC "NOTED" WERE "PLEXIGLAS, P-41, GR A." TO DISC ADDED MAT NOTE. NO CHG. REQ.	9-4-45	[illegible]

LA A26937
LA A26193

(E) BREAK EDGES 1/32 x 45°

6 1/2 R (A)

3 1/2

A

45° 45°

3 3/8

3 1/4 D 4 1/4 6 3/4

1/8 3 3/4 D 4 3/4 D

2 3/4 DIA

(B) AN502-10-6 FILLISTER HD. SCREWS - 6 PLACES

(B) AN502-10-6 FILLISTER HD. SCREWS - 6 PLACES

-6

Q4305-D4 RIVETS

-7 HEAT TREAT SR-53

TO BE JIG DRILLED FOR INTERCHANGEABILITY WITH 28W5065-13 - #11(191) DRILL (C)

-8

SECT. A-A

EXTERNAL SURFACE (D)

(B) STAMP IN LETTERS 1/8 HIGH ON OUTSIDE OF DOOR IN TWO PLACES

NOTE! THESE DOORS ARE NOT GAS-TIGHT- USE WITH FUEL CELLS ONLY

ASSY. CLASS NO.	MODEL	MAT'L ASSY.	REQ.
	REQUIREMENTS PER AIRPLANE		
-8	PBY-5A	28W5063	2
-7	PBY-5	28W5063	2
-7	PBY-5A	28W5063	2
-7	28-SAMN	28W5063	2
-0	PBY-5	28W5065	14
-0	PBY-5A	28W5065	14
-0	28-SAMN	28W5065	19
-0	PBY-5	28W6032	5
-0	PBY-5A	28W6032	5
-0	PBY-5B	28W6032	5

C 70496 & C. 77713
C. 70496
C. 70496 & C 77718
C. 70496
C 77718
C 91876
C 88476

PART No.	STOCK	MATERIAL	SPEC.	LH REQ. -0	RH REQ. -2	LH REQ. -3	RH REQ. -4	LH REQ. -5	RH REQ.
PARTS LIST PER ASSY.									
		Q4305-D4							
-8	1/8 x 5 1/4 DIA	NOTED	NOTED	1					
-7	.051 X 6 1/4 DIA.	ALC 2490	47A-8-A	1					
-6	.040 x 6 1/2 x 6 1/4	ALC 2457	47A8-7	1					

MATERIAL NOTE -
1- MAT FOR -8 MAY BE -
(2) PLEXIGLAS, SPEC. P-41 GR A. OR
(3) CELLULOSE ACETATE, SPEC P-41. GR B.

-8	28-SAMN	28W5063	2
-8	PBY-5	28W5063	2
MODEL		MAT'L ASSY.	
REQ'TS PER AIRPLANE			

C 70496

A C				PLANO							
NAVY NOTED				72141							
HEAT TREAT	FINISH			DRAFT	CHECK	STRUCT	BAY	ASSEMBLY	ENG.		
NAME ACCESS DOOR - FUEL CELL COUPLINGS - LWR. SURF. WING				OPP. HAND —							
CONSOLIDATED AIRCRAFT CORP. San Diego, Calif.				SIZE D	28W5064						

LET	ALTERATION	DATE	BY
A	CHANGED NO. OF HOLES FROM 12 TO 18. ADDED 3 @ 24° & 9 EQUAL SPACES" DIM. ADDED 3/16 LOCATE NOTE. CHANGED LOCATION OF PART NO. FROM PAD TO 3/16 FLANGE.		
	WT. CHG. NEG.	10-6-43	STEBBINS

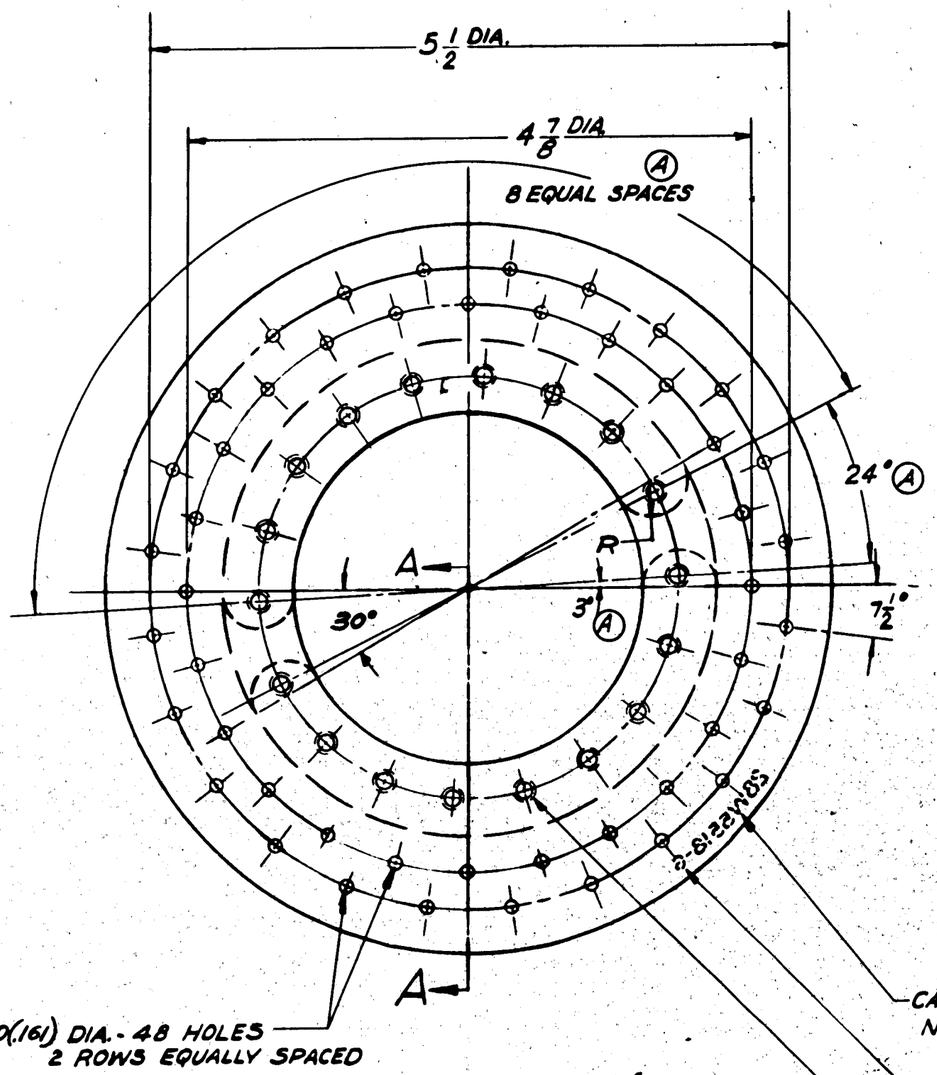

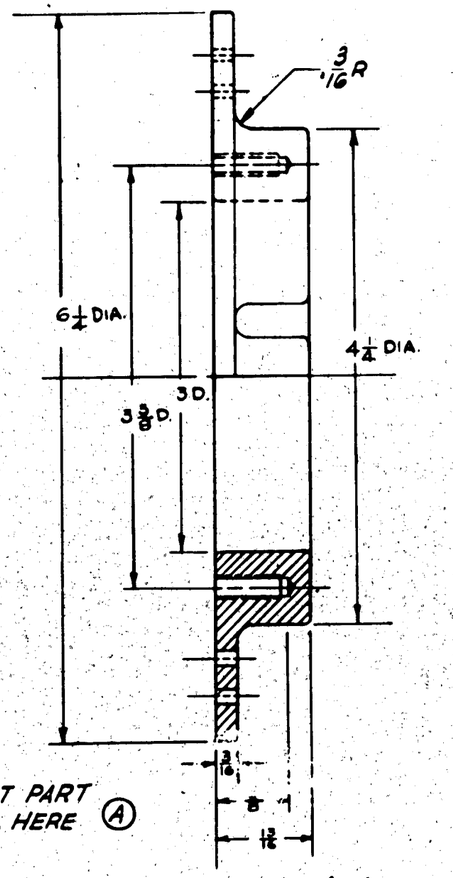

SECTION A-A

NOTE:
ALL RADII 1/16 UNLESS OTHERWISE NOTED

MCR #290

APPROVED FOR TOOLING BY
Gene 7/21-43

ASSY. DASH No.	MODEL	NEXT ASSY.	REQ.
-6	P8Y5A	28W6032	4

REQUIREMENTS PER AIRPLANE

REPLACES — CALC. WT. 89#

REPLACED BY — ACT. WT.

UNLESS OTHERWISE SPECIFIED ± 1/32 ∠ ± 1/2° — SCALE 12"=1'0"

STAMP PART NUMBER WHERE SHOWN

-6 FINISHED PART
ROUGH CASTING AL ALLOY AN-QQ-A-394

PART No.	STOCK	MATERIAL	SPEC	LH REQ.	RH REQ.	LH REQ.	RH REQ.	LH REQ.	RH REQ.	LH REQ.	RH REQ.	LH REQ.	RH REQ.
PARTS LIST PER ASSY.				-0		-2		-3		-4		-5	

		DRAFT	CHECK	STRUCT	MAT	APPROV	ENG.
AC		DUSSARD					
NAVY NONE	Z-P-GP	6-23-43	7-23-43			7/28	
HEAT TREAT	FINISH						

NAME CASTING-FUEL CELL COUPLING ACCESS DOOR

OPP. HAND

DWG SIZE D — 28W5518

CONSOLIDATED VULTEE AIRCRAFT CORP. SAN DIEGO DIVISION . . . SAN DIEGO, CALIF.

R PITTSMPE

LET	ALTERATION	DATE	BY
A	REMOVED NOTE "3/16 DIA 12 HOLES EQUALLY SPACED" ADDED NOTE "3/10 DIA. HOLE 18 PLACES - - - 28W5522-7", ADDED 3° (REF), 24° (REF), 8 EQUAL SPACES (REF) W/ CHG NEG.	10-5-43	Hanson

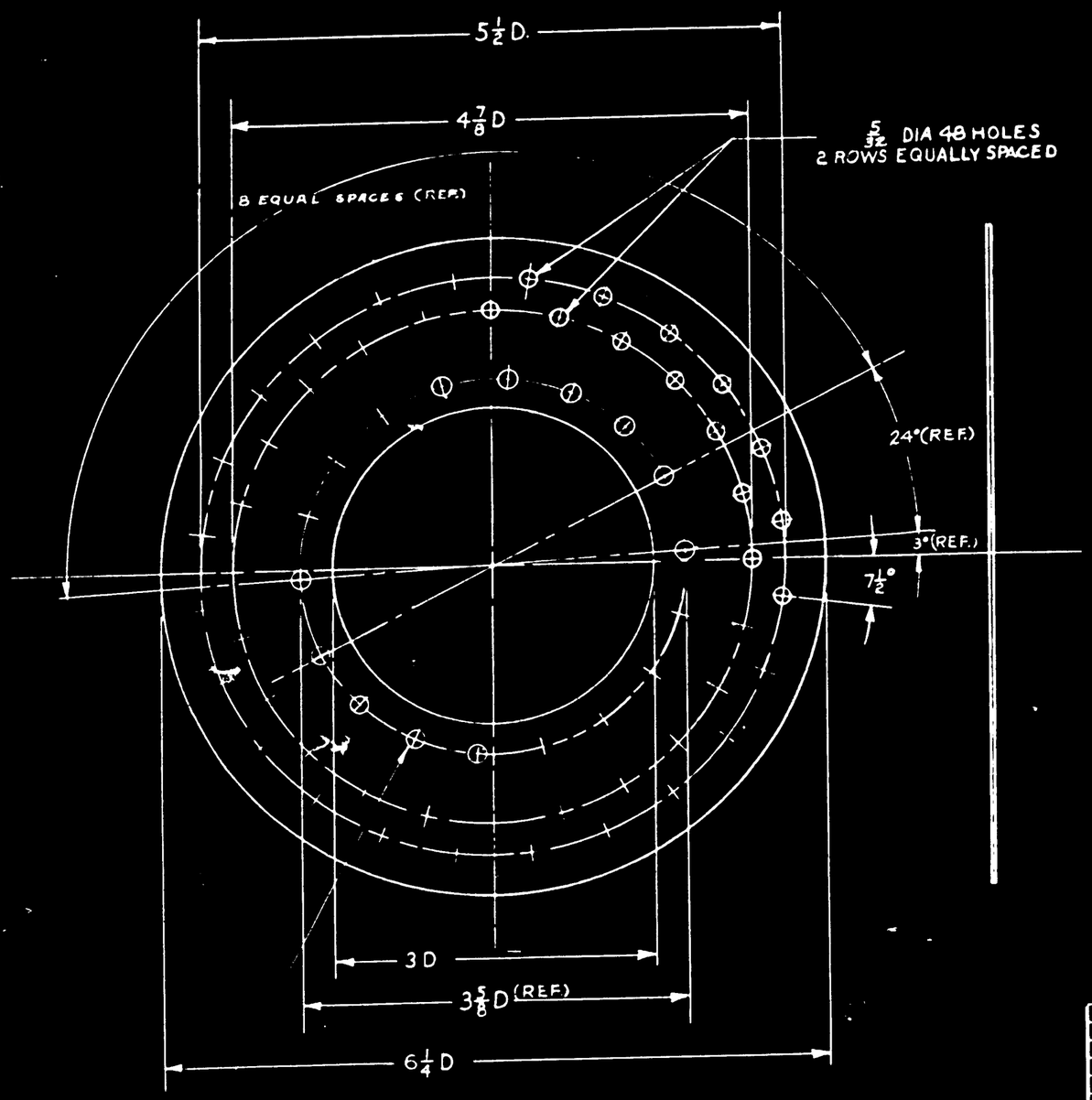

3/10 DIA HOLE (18 PLACES) TO MATCH 28W5518 28W5521, 28W5522-6 & 28W5522-7 (REF)

(A)

MCR# 290

APPROVED FOR TOOLING BY Brue 7/21/43

ASSY. DASH NO.	MODEL	NEXT ASSY.	REQ.
	PBY-5A	28W6032	4

REQUIREMENTS PER AIRPLANE

REPLACES	.055 CALS. WT.
REPLACED BY	ASY. WT.
UNLESS OTHERWISE SPECIFIED ± 1/32 & ± ½°	SCALE 12"=1'-0"

STAMP PART NUMBER WHERE SHOWN

PART NO	STOCK	MATERIAL	SPEC	LH REQ	RH REQ	LH REQ	RH REQ	LH REQ	RH REQ	LH REQ	RH REQ	LH REQ	RH REQ
	⅛ X 6⅛ X 6⅛	SYN. RUBBER	Emboss Type B										
PARTS LIST PER ASSY (28)				-0		-2		-3		-4		-5	

A.C.		STEWART					
NAVY NONE	NONE	7-15-43	7-23		8-2	1-18	
HEAT TREAT	FINISH	DRAFT	CHECK	STRUCT	MAT	APPROV	ENG.

NAME GASKET-FUEL CELL COUPLING ACCESS DOOR LARGE

OPP. HAND

CONSOLIDATED VULTEE AIRCRAFT CORP. WESTERN PACIFIC DIVISION . . . SAN DIEGO, CALIF.

DWG SIZE D 28W5520

28W5520 R

END OF FILE

LET	ALTERATION	DATE	BY
A	REMOVED NOTE "3/16 DIA 12 HOLES EQUALLY SPACED" ADDED NOTE "3/16 DIA. HOLE ---- 28W5522-7" ADDED		
	24°(REF) & 8 EQUAL SPACES(REF)		
	REMOVED 30° W.I.CH6.026	12-5-43	[illegible]

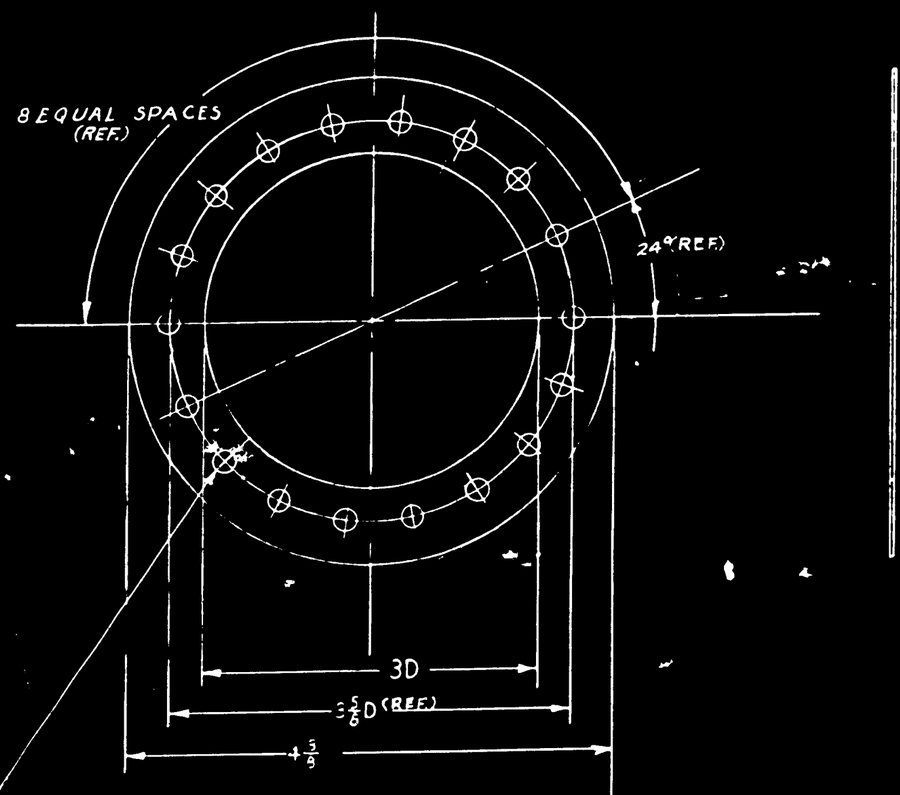

3/16 DIA. HOLE 18 PLACES TO MATCH 28W5518 & 28W5520, 28W5522-6 & 28W5522-7 (REF)

MCR #290

APPROVED FOR TOOLING BY [signature] 7/21-43

ENG. FILE

ASSY DASH NO.	MODEL	NEXT ASSY	REQ
	PBY-5A	28W6032	4

REQUIREMENTS PER AIRPLANE

REPLACES — .02 CALC WT.

REPLACED BY — ACT WT

LIMITS ON DIMENSIONS UNLESS OTHERWISE SPECIFIED: ± 1/32 & ± 1/2°

SCALE 12" = 1'-0"

STAMP PART NUMBER WHERE SHOWN

PART NO	STOCK	MATERIAL	SPEC	LH REQ.	RH REQ.	LH REQ.	RH REQ.	LH REQ.	RH REQ.	LH REQ.	RH REQ.	LH REQ.	RH REQ.
PARTS LIST PER ASSY	1/32 x 4 5/8 x 4 5/8	SYN RUBBER	AN-R-4 TYPE II	-0		-2		-3		-4		-5	

AC			DRAFT	CHECK	STRUCT	MAT	APPROV	ENG
NAVY NONE	NONE		7-15-43	7-23-43				
HEAT TREAT	FINISH							

NAME GASKET - FUEL CELL COUPLING ACCESS DOOR - SMALL

OPP HAND

DWG D SIZE 28W5521

CONSOLIDATED VULTEE AIRCRAFT CORP. SAN DIEGO DIVISION . . . SAN DIEGO, CALIF.

R 1255M82

LET	ALTERATION	DATE	BY

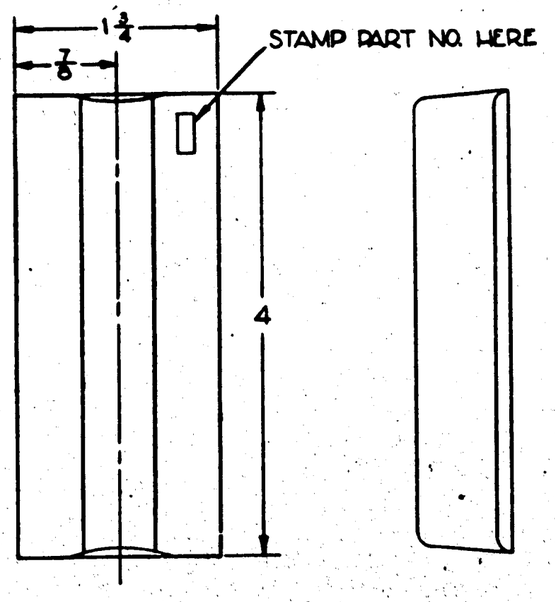

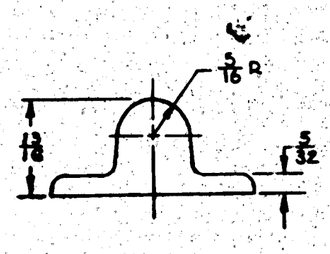

NOTE -
1. ALL RADII NOT SPECIFIED TO BE 1/8
2. DRAFT TO BE 5° ± 1°

N.A. PARTS THAT MAY BE MADE

PART NO.	NO. PER FORGING
29B3347	3
29B3383	2
29F3699-6	2
29F3699-7	4
32W574	1
28C6033	4
28B2137	5

ASSY. DASH NO.	MODEL	NEXT ASSY.	REQ.
	28SAMN	28C6033	1
	PBY-5B	28C6033	1
	PBY-5A	28C6033	1
	PBY-5	28C6033	1
	28SMC	28B2137	6
	28SMA	28B2137	6
	CA-10	28B2137	6
	PBY-5A	28B2137	6
	PBY-5	28B2137	6
	PB2Y-3	28B2137	6
	32MF	32W574	2
	B24F	32W574	2
	B24D	32W574	2
	B24C	32W574	2
	B24A	32W574	2
	B24	32W574	2
	XB24	32W574	2
	PB2Y-3	29F3699	2
	PB2Y-3R	29B3383	1
	PB2Y-3	29B3383	1
	PB2Y-3R	29B3347	1
	PB2Y-3	29B3347	1

REQUIREMENTS PER AIRPLANE

REPLACES — .16 GALS. WT.

REPLACED BY — ASS'Y. WT.

LIMIT OF ENGINEERING CONTROL APPROVED DRAWINGS: ± 1/32

SCALE: 12" = 1-0"

STAMP PART NUMBER WHERE SHOWN

PART NO.	STOCK	MATERIAL	SPEC.	LH REQ.	RH REQ.	LH REQ.	RH REQ.	LH REQ.	RH REQ.	LH REQ.	RH REQ.	LH REQ.	RH REQ.
	FORGING	14SAL ALL	14AA7 GR.5 99-A-367GR5										
PARTS LIST PER ASSY.				-0		-2		-3		-4		-5	

AC 65000	NONE	LIMITATIONS		
NAVY 65000	NONE	3-1-43	KULL	
HEAT TREAT	FINISH	DRAFT	CHECK	STRUCT	MAT	APPROV	ENG.

NAME FORGING - WING - T.E. TO TRACK ATTACHMENT FITTING

OPP. HAND

CONSOLIDATED AIRCRAFT CORP. SAN DIEGO, CALIF.

SPEC. D DWG. 32W1297

APPROVED FOR TOOLING BY Sterling 6-26-43

R 32W1297

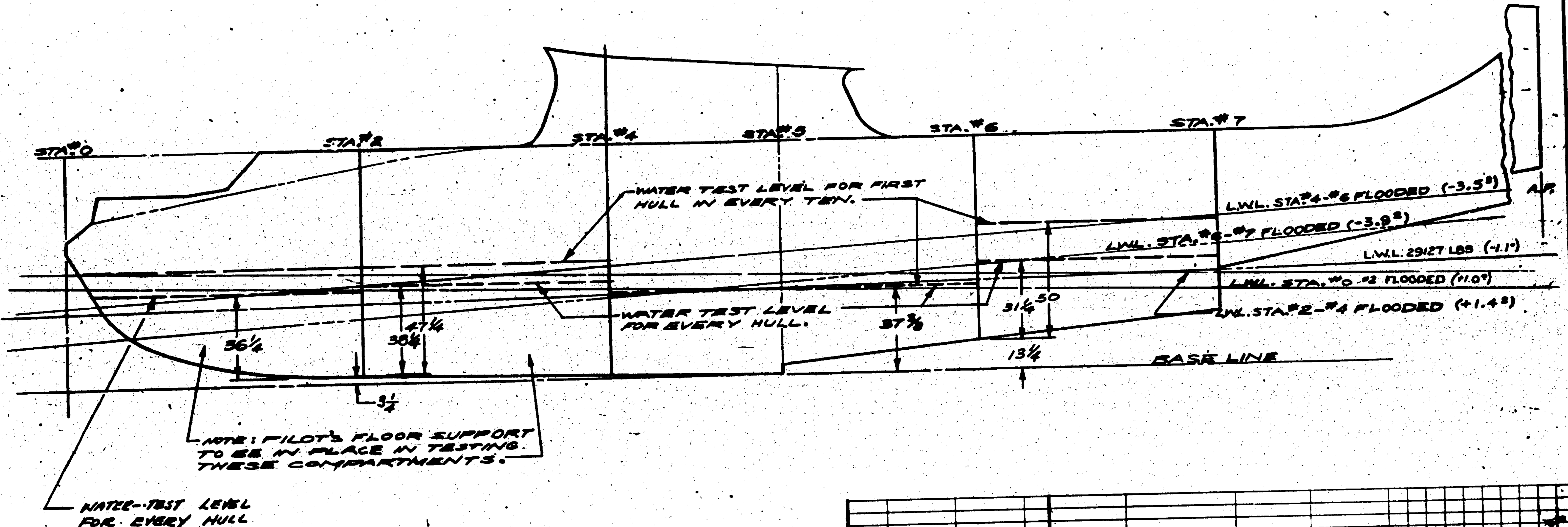

WATER LINE HEIGHT ABOVE BASE LINE AT STA. #6 (INS.)	
OVER-LOAD (29,127)	36.9
0-2 FLOODED	36.5
2-4 "	42.7
4-6 "	52.0
6-7 "	[illegible]

LET	ALTERATION		

P5Y-5
FBY-5

ASSY. DASH No.	MODEL	NEXT ASSY.	REQ.

REQUIREMENTS PER AIRPLANE

REPLACES — CALC. WT.

REPLACED BY — ACT. WT.

LIMIT ON DIMENSIONS UNLESS OTHERWISE SPECIFIED +

SCALE 3/8" = 1'0"

STAMP PART NUMBER WHERE SHOWN.

PART No.	STOCK	MATERIAL	SPEC.	REQ. -0 (LH / RH)	REQ. -2 (LH / RH)	REQ. -3 (LH / RH)	REQ. -4 (LH / RH)	REQ. -5 (LH)

PARTS LIST PER ASSY.

AC		ROYCE 1-24-40					
NAVY							
HEAT TREAT	FINISH	DRAFT	CHECK	STRUCT	MAT.	APPROV	ENG

NAME WATER TIGHTNESS TEST LEVELS & LOAD WATER LINES WITH COMPARTMENTS BILGED

OPP. HAND ——

DWG. SIZE D 28Z5001

CONSOLIDATED AIRCRAFT CORP. · SAN DIEGO, CALIF.

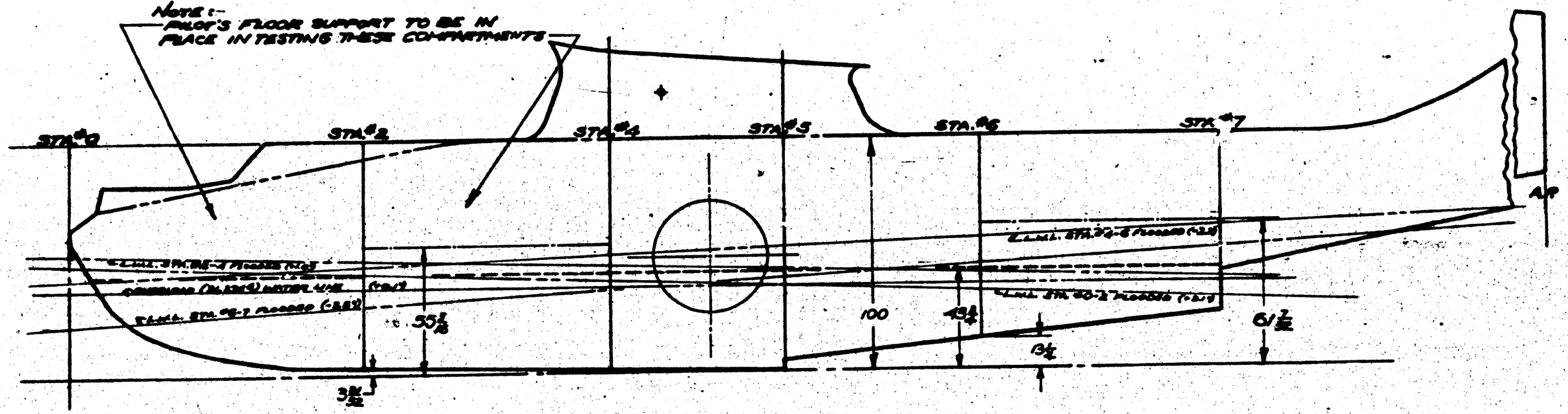

——·——·—— LOAD WATER LINE
——·——·—— WATER TEST LEVEL - EVERY 10TH. HULL
- - - - - - - - WATER TEST LEVEL - ALL HULLS

WATER LINE HEIGHT ABOVE BASE LINE AT STA. #0 (WL#) *	TRIM*
[illegible]	[illegible]

* DATA ARE FOR C.G. AT 27.0% MAC. ONLY

PART NO.	STOCK	MATERIAL	SPEC.	LH REQ. -0	RH REQ. -0	LH REQ. -2	RH REQ. -2	LH REQ. -3	RH REQ. -3	LH REQ. -4	RH REQ. -4	LH REQ. -5	RH REQ. -5
PARTS LIST PER ASSY.													

A.C. NAVY		DRAFT	STRUCT.
HEAT TREAT	FINISH		MAT.

NAME WATER TIGHTNESS TEST
ASSY'S 5300 SERIES
WITH CHANGE NO. 1 THRU

CONSOLIDATED AIRCRAFT CORP. SAN DIEGO, CALIF.

SIZE D

2875327

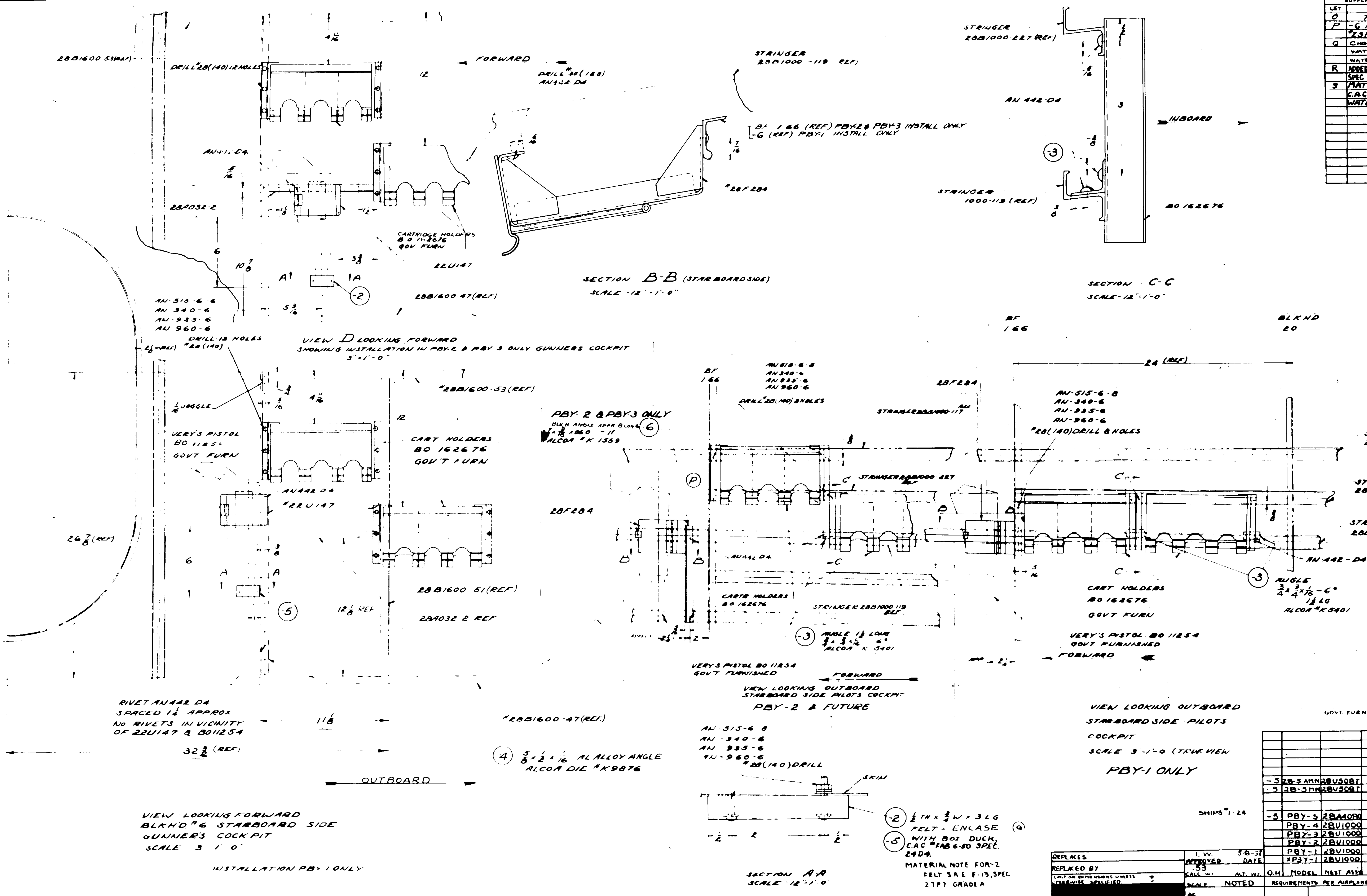

-2 1/2 TH x 3/4 W x 3 LG FELT - ENCASE (Q)
-5 WITH 8OZ DUCK, C.A.C #FAB 6-50 SPEC. 24D4.

MATERIAL NOTE: FOR -2
FELT S.A.E. F-13, SPEC
27F7 GRADE A

SUPPLIES & EQUIPMENT CLASSIFICATION

LET	ALTERATION	DATE	BY
O	TRACED	5-8-37	
P	-6 MOVED FROM STR'S #227 & #231 TO STR'S #119 & #121	7-16-37	Mi.Ho
Q	CHG'D -2 & -5 MAT'L FROM 20 OZ WATERPROOF FABRIC TO 8OZ. WATERPROOF FABRIC, WT. CHG. NEG.	5-3-41	
R	ADDED NOTE FOR -2 FELT S.A.E. F-13, SPEC 27F7 GRADE A WT. CHG. NEG.	10-28-41	MOLL
S	MAT'L. FOR -5 "8 OZ. DUCK, C.A.C. #FAB 6-50" WAS "8 OZ. WATERPROOF FABRIC" WT. CHG. NEG.	11-11-42	MORRIS

FINISH
GP GREEN PRIME

SHIPS #1-24

O.H	MODEL	NEXT ASSY	REQ	PART	PBY-1	PBY-2	PBY-3
				GOVT. FURN. B0162676	4	4	4
				GOVT. FURN. B011254	2	2	2
				28A032-2		1	1
				28F284	1	1	1
				22U147	1	1	1
				-6		1	1
				-5	1	1	1
				-4	1	1	1
-5	28-5AMN	28U508T	1	-3	2	2	2
-5	28-5MN	28U508T	1	28A014-2	1	1	1
			1	AN960-6	22	22	22
			1	AN935-6	22	22	22
-5	PBY-5	28A4080	1	AN340-6	22	22	22
	PBY-4	28U1000					
	PBY-3	28U1000		AN515-6-8	10	10	10
	PBY-2	28U1000	1	AN-515-6-6	12	12	12
	PBY-1	28U1000	1	AN-442-D4			
	XP3Y-1	28U1000	1				

REQUIREMENTS PER AIRPLANE — PARTS LIST PER ASSY.

REPLACES	L.W. APPROVED	5-8-37 DATE	
REPLACED BY	.53 CALC WT.	ACT. WT.	
LIMIT ON DIMENSIONS UNLESS OTHERWISE SPECIFIED ±	SCALE NOTED		
	AC		
	NAVY NOTED	NOTED SPEC.	NOTED HEAT TREAT
	MATERIAL	TOUCH UP G.P. FINISH	DRAFT 3-7-36 Miller; CHECK Hack 5-28-37; EXAM; ENG
	CONSOLIDATED AIRCRAFT CORP. BUFFALO N.Y.	NAME INSTALL-ARM-(FR. & REAR) VERY'S PISTOL & AMM. BOX	OPP. HAND. SIZE G DWG. 28A014

LET	ALTERATION	DATE	BY

LET	ALTERATION	DATE	BY
A	REQN'S OF -8-9-10 WAS 2 REQD IN ERROR FINISH NOTE COMPLIED		
B	Q4303-D3-7 REVISED AT Q4303-D4 NOTE ADDED	10-30-43	
C	SPOTWELDS REPLACED BY Q4303-D4 RIVETS FASTEN ING 28A1018 TO -6L & -6R CHG'D. AN442-D4 TO AN442-D3	10-30-43	
D	ON FACE REMOVED Q7007-D9-1040 (2 PLACES) IN B/M REMOVED Q7007-D9-040. 22 REQ'D WT. CHG. NEG.	8-31-43	ANTIN
E	TO B/M ADDED "28P5181" (2 REQ); AT 28P5181 & 22P642 ADDED "SEE NOTE 2" TO FACE, ADDED NOTE 8 AT CALLOUT OF 22P642 ADDED "SEE NOTE 8) & "28P5181 (SEE NOTE 2)" NO WT. CHG.	9-16-43	HOOK

Q4303-D4 RIVET CSK. FLUSH ON INNER SIDE (E)

$\frac{7}{16}$

$\frac{1}{8}$

B

B

$\frac{3}{16}$

$3\frac{3}{8}$ R

$2\frac{1}{4}$

(E)
28P5181 (SEE NOTE 8)
22P642 HOOK (SEE NOTE 2)
22P643 LINK
22P644-1 R.H. CLIP
22P644 L.H. CLIP
22P641 LEVER
22Q134 WASHER - 2 REQ.
AN 442 AD 2 RIVET
Q806-2-D11 SPACER
AN 442 AD3 RIVET - 8 REQ.
} 2 REQ.

2 REQ. { STRIP AN442 AD4 - 10 REQ. (-7R) (-7L)

(A) 4 REQ. { HINGE (-8) HINGE (-9) PIN (-10)
PEEN ENDS
AN442 RIVET - 4 REQ.
(B) RIVET DOES NOT PENETRATE WEBBING

STRAP (-11)

4 REQ. { Q5761-K8-4.75 CEMENT IN PLACE Q4303-D4 RIVET - 5 REQ. (B) (D)

$1\frac{1}{2}$

$2\frac{1}{8}$

$12\frac{1}{2}$

$4\frac{1}{8}$

4 (REF.)

$5\frac{7}{8}$

VIEW A-A

(B) Q5761-K5-7.75
CEMENT TO BKT Q4303-D4- RIVET } 5 REQ. } 2 REQ.
(D)

Q5761-K5-19
CEMENT TO BKT. RIVET SAME AS -11 8 PLACES.

28A1018 BACK - 2 REQ.

A

$6\frac{1}{8}$

$3\frac{1}{16}$

JIG DRILL #10 (.193) 4 HOLES.

$1\frac{7}{8}$

$\frac{7}{16}$

$\frac{13}{16}$

$1\frac{9}{16}$

1

1R

$9\frac{5}{8}$

(6R) (6L) SIDE

AN 442 AD4 RIVET - 4 REQ.
AN 425 AD4 RIVET - 2 REQ.

(C) Q4303-04 RIVET CSK. FLUSH IN -6L & -6R

28A1017 BASE

S.O. 927-545

SPOTWELD

$2\frac{3}{8}$

$\frac{5}{8}$

A

$2\frac{3}{8}$

$7\frac{1}{4}$ (REF.)

22P641 (REF.)
AN442 D2 (REF.)
22P643 (REF.)
22Q134 (REF.)
Q806-2-D11 (REF.)
22P644 (REF.)
Q4303-D4 (REF.) (B)
(C) AN442-D3 (REF.)

VIEW B-B

FINISH:- Z-P-26P FOR ALL ALCLAD PARTS - TOUCH UP RIVETS AFTER ASSEMBLY TO MATCH ATTACHING SURFACE. (A)

GP-GREEN PRIME

FINISH CODE	
Z	ANODIC TREATMENT
P	P-27 PRIMER
AP	ALUMINIZED PRIMER
C	CADMIUM

NOTE:
1.- ADJUST TOGGLE CLAMP TO HOLD CYLINDER OF $6\frac{3}{4}$ DIA. TIGHTLY.

(E) 2.- 22P642 IS AN INTERCHANGEABLE ALTERNATE FOR 28P5181.

PART No	STOCK	MATERIAL	SPEC	LH RH REQ. -0	LH RH REQ. -2	LH RH REQ. -3	LH RH REQ. -4	LH RH REQ. -5
AN425 AD4								4
AN442 AD4								4
AN442 AD3								8
AN442 AD2								4
Q4303-D4								5
Q806-2-D11								2
28P5181 (SEE NOTE 8)								2
22Q134								4
22P644-1								2
22P644								2
22P643								2
22P642 (SEE NOTE 2)								2
22P641								2
28A1018								2
28A1017								1
Q5761-K8-4.75								4
Q5761-K5-19								1
Q5761-K5-7.75								2
-11	.040 x 5/8 x 4 3/4	ALC. SHT.	47A8 T	4				
-10	.090 DIA x 1 1/8	SS STL. WIRE	22W18-H	4				
-9	Y54 A10 T x 1 1/8			4				
-8	Y54 A10T x 1 1/8			4				
-7R	.040 x 1 1/8 x 4 3/4	ALC. SHT.	47A8 T	2				
-7L	.040 x 1 1/8 x 4 3/4	ALC. SHT.	47A8 T	2				
-6R	.064 x 6 3/8 x 12 3/8	ALC. SHT.	47A8 T	1				
-6L	.064 x 6 3/8 x 12 3/8	ALC. SHT.	47A8 T	1				

PARTS LIST PER ASSY.

ASSY SALES No.	MODEL	NEXT ASSY No.
PBY-5A	28A2008	1
PBY-5	28A2009	1
PBY-4	28A2004	1
PBY-3	28A2006	1
PBY-2	28A2007	1
PBY-1	28A1008	1

REQUIREMENTS PER AIRPLANE

REPLACES — CALC QTY

REPLACED BY — ACT QTY

LAST ON DRAWING SHOWN BY DRAWING: 1123

STAMP PART NUMBER WHERE SHOWN

SCALE 12" = 1'-0"

BILLING

A C	NOTED	10-24-42
NAVY		
HEAT TREAT	FINISH	DRAFT

CHECK STRUCT MAT APPROV ENG

NAME: BRACKET ASSEM - SMOKE CO_2 BOTTLE

CONSOLIDATED AIRCRAFT CORP. SAN DIEGO CALIF.

OPP. HAND

DWG G SIZE

28A1016

LET	ALTERATION	DATE	BY
F	TRACED UP TO DATE	2-1-38	ARMY
G	ADDED NOTE re 9, NO V.C. CONC. (NOR 3698)	9-22-38	

NOTE:
1. EFFECTIVE WITH FIRST AIRPLANE ON NOR 2698 THIS PART IS RELEASED FOR EVERY THIRD PBY-5A AIRPLANE. EFFECTIVE ON ALL PBY-5A AIRPLANES PRIOR TO NOR 3698

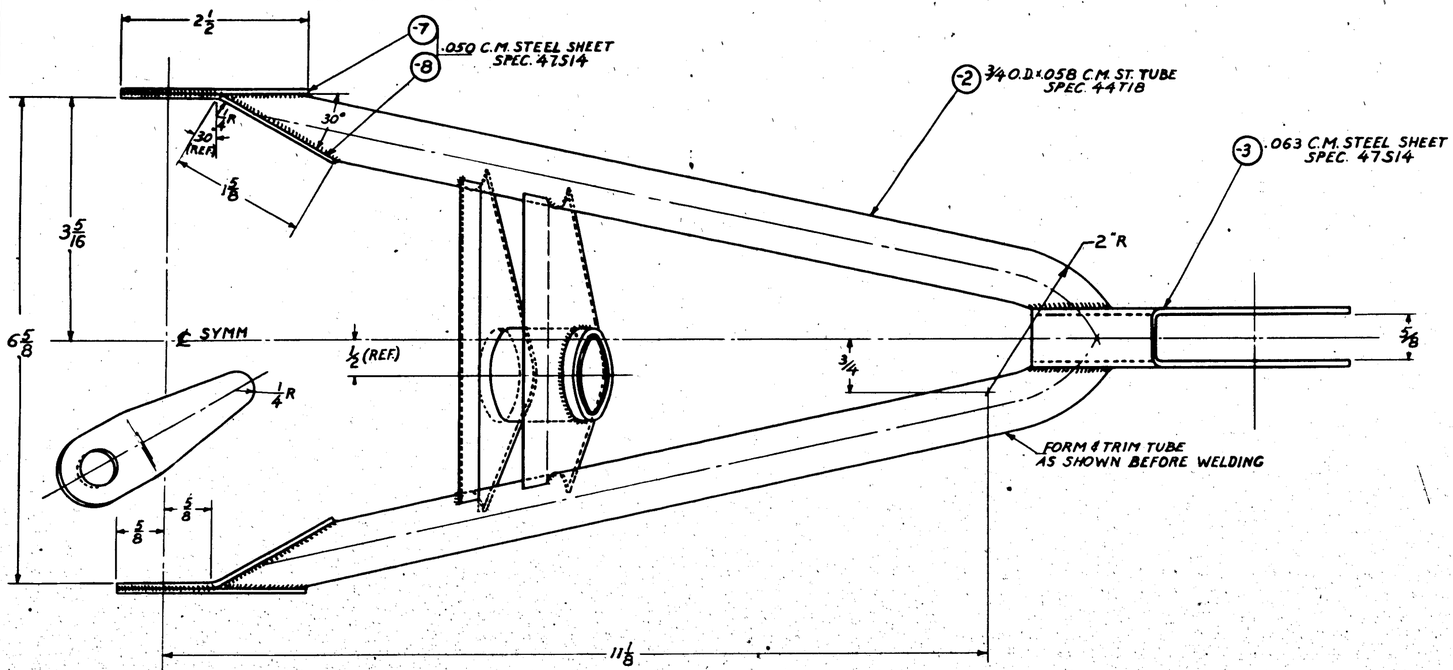

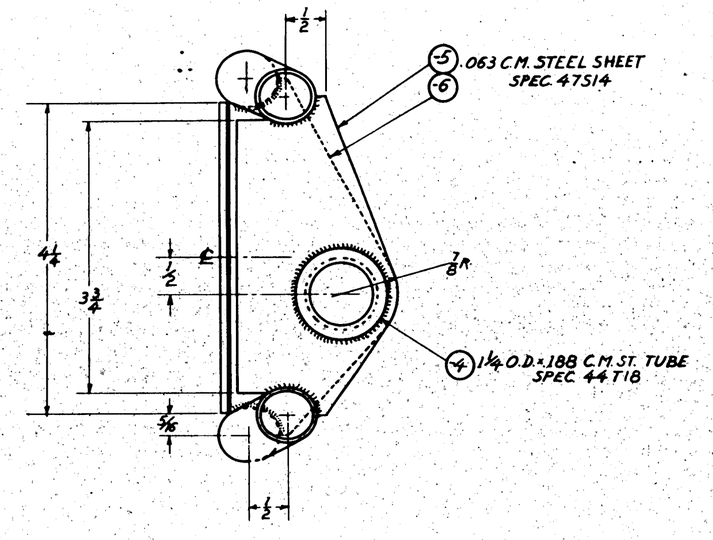

SECTION A-A

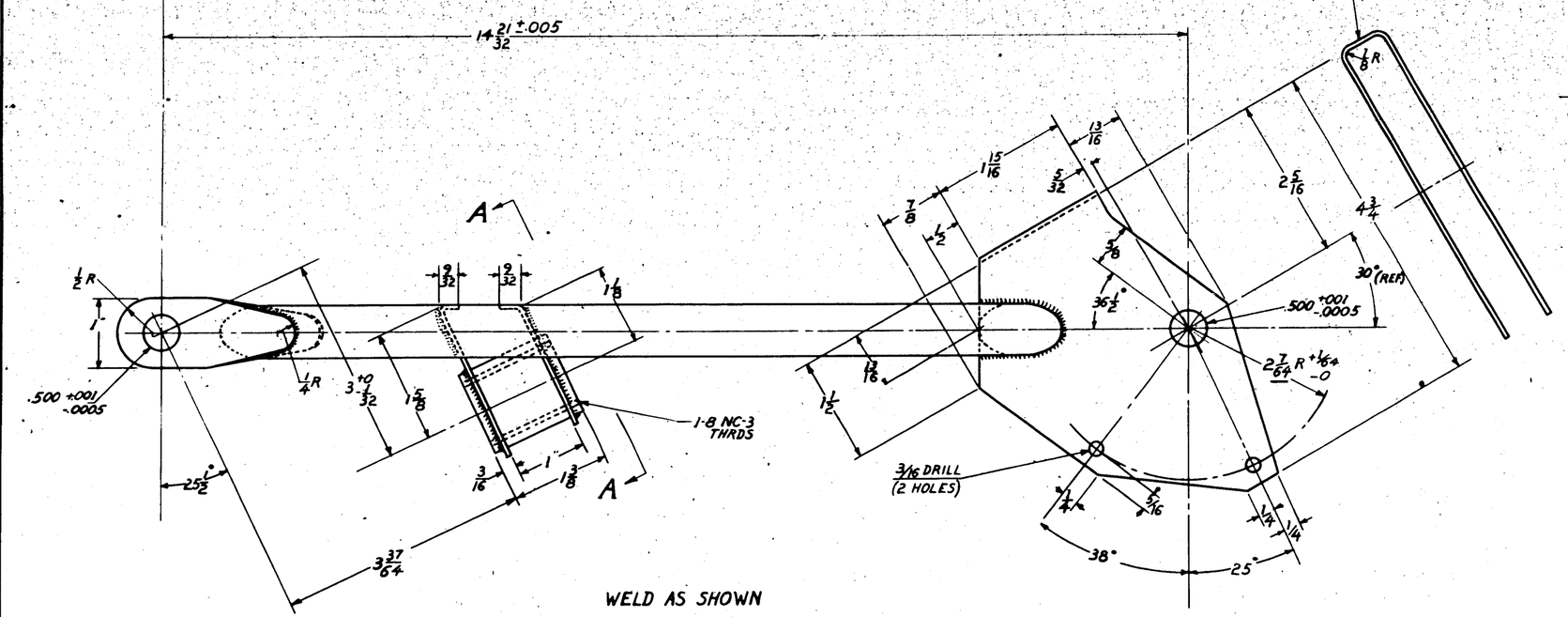

WELD AS SHOWN

FINISH:
CAD. PLATE
HOT RAW LINSEED OIL
P27 PRIMER.
GREEN PRIMER

O. H.	MODEL	NEXT ASSY.	REQ.	ST'D PARTS	LH	RH	PART NO.	LH	RH	LH	RH	LH	RH
					REQ.			REQ.		REQ.		REQ.	
							28A2036-8	2					
							-7	2					
							-6	1					
							-5	1					
							-4	1					
							-3	1					
	PBY-5A	28A3080	1				28A2036-2	2					
	PBY-5	28A5080											
		28A2009											

REQUIREMENTS PER AIRPLANE | ST'D MAT. | PARTS LIST PER ASSY.

A C				
NAVY NOTED	NOTED	NORMALIZE	C-HRO-P-1	
MATERIAL	SPEC.	HEAT TREAT	FINISH	

REPLACES — DATE 2-5-38
REPLACED BY — GALS. WT. — DRY WT.
LIGHT ON GROUNDING WHEELS — SCALE 12"-1'-0"

SEE NOTE 1

6-30-37 GB
7-7-37
DRAFT | CHECK | ENGR.

Note: GENERAL UTILITY Not included in weight empty of Airplane.

CONSOLIDATED AIRCRAFT CORP. SAN DIEGO, CALIF.

NAME STRUT-LOWER-TARGET TOWING REEL MOUNT

OPP. HAND

SIZE G | 28A20

LTR	ALTERATION	DATE	BY
D	TRACED UP TO DATE.	2-2-38	ADAMS
E	ADDED NOTE "ALTERNATE - - - COND. N." WT. CHG. NEG.	10-9-42	MORENO
F	ADDED NOTE NO 1. NO WT. CHG.	8-27-43	LOUER

SUPPLIES & EQUIPMENT CLASSIFICATION

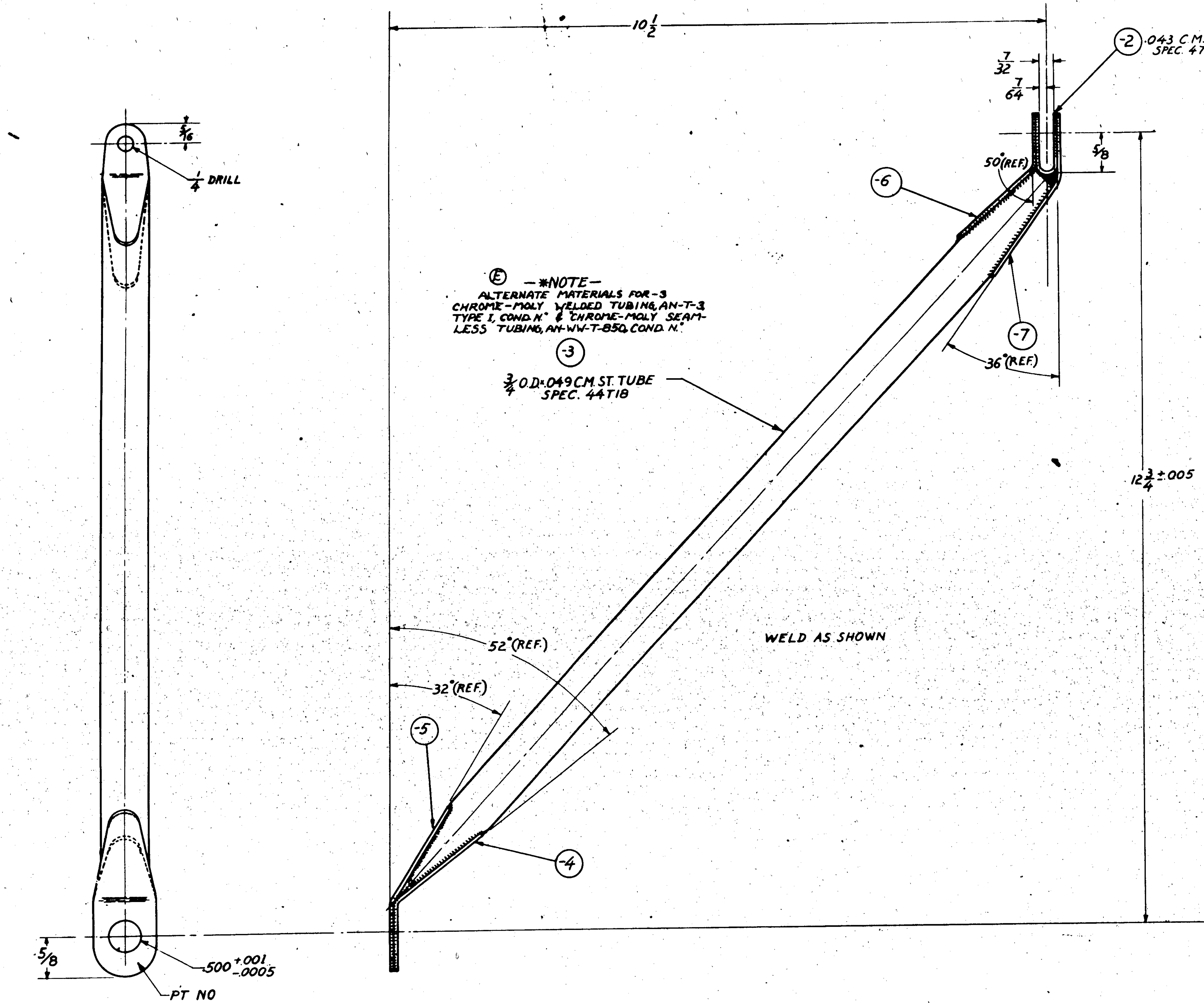

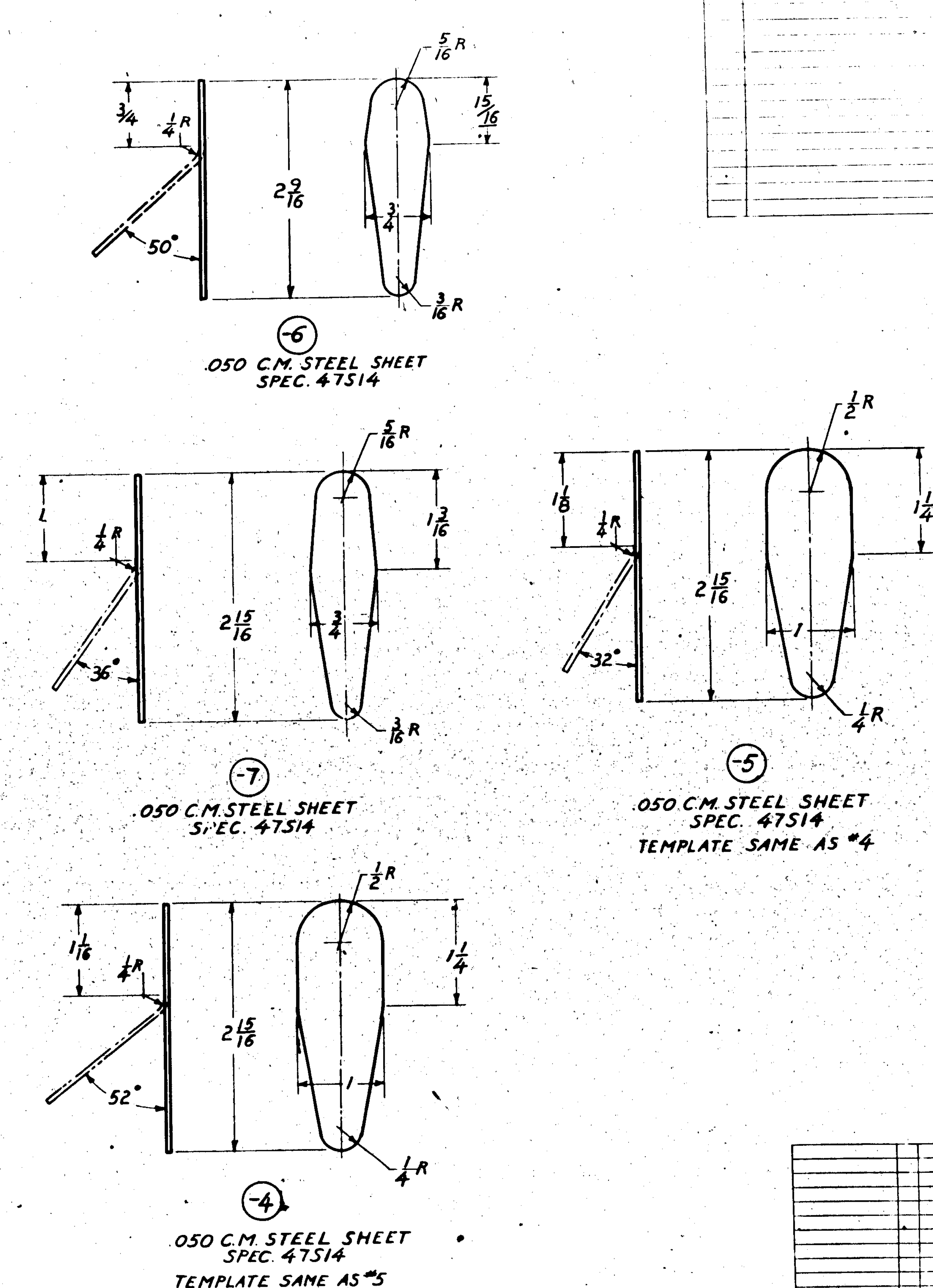

NOTE:

(F) 1. EFFECTIVE WITH FIRST AIRPLANE ON MCR 2588 THIS PART IS RELEASED FOR EVERY THIRD PBY-5A AIRPLANE. EFFECTIVE ON ALL PBY-5A AIRPLANES PRIOR TO MCR 2588.

FINISH:
CAD. PLATE
HOT RAW LINSEED OIL
P27 PRIMER
GREEN PRIMER

Note: GENERAL UTILITY Not included in weight empty of Airplane.

O. H.	MODEL	NEXT ASSY.	REQ.	STD PARTS	LH	RH	PART NO.	REQ.
							28A2037-7	1
							-6	1
							-5	1
							-4	1
	PBY-5A	28A5080	2				-3	1
	PBY-5	28A5080	2				28A2037-2	1
		28A2009						

REQUIREMENTS PER AIRPLANE — MAT. — PARTS LIST PER ASSY.

28A2037 OF 6-25-37 REPLACES	SEE NOTE #1 — REL 2-2-38 APPROVED / DATE	
REPLACED BY	.61 J.B.J. CALC. WT.	ACT. WT.
LIMIT ON DIMENSIONS UNLESS OTHERWISE SPECIFIED ±1/32	12" = 1'-0" SCALE	

[redacted]

AC					
NAVY NOTED	NOTED	NORMALIZE	C-HRO-P-1	9-23-37	9-24-37
MATERIAL	SPEC.	HEAT TREAT	FINISH	DRAFT / CHECK	EXAM.

CONSOLIDATED AIRCRAFT CORP. SAN DIEGO, CALIF.

NAME: STRUT, CENTER - TARGET TOWING. REEL MOUNT

OPP. HAND

DWG. SIZE G 28A203

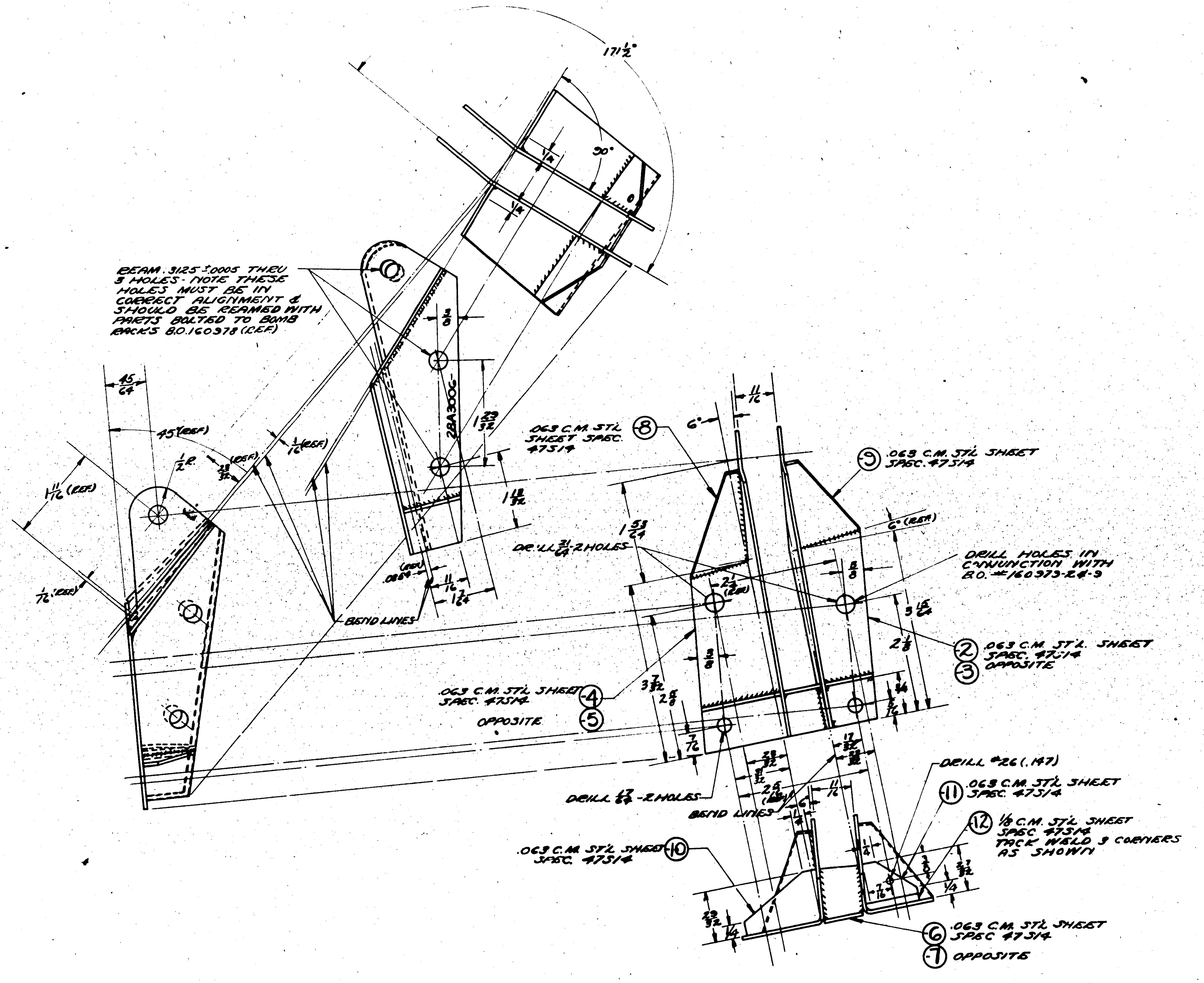

SUPPLIES & EQUIPMENT CLASSIFICATION

LET	ALTERATION	DATE	BY
D	TRACED	6-20-38	[illegible]

O.H.	MODEL	NEXT ASSY.	REQ.	ST'D PARTS	LH REQ.	RH REQ.	PART NO.	LH REQ.	RH REQ.
							-12	1	1
							-11	1	1
							-10	1	1
							-9	1	1
							-8	1	1
							-7		1
-1	PBY-4	28A3007					-6	1	
	PBY-4	28A3002					-5		1
-1	PBY-3	28A3002					-4	1	
	PBY-3	28A3002					-3		1
							28A3006-2	1	

REQUIREMENTS PER AIRPLANE | MAT. | PARTS LIST PER ASSY.

REPLACES | APPROVED [illegible] DATE 6-20-38
REPLACED BY | CALC. WT. 48 | ACT. WT.
1/64" & 1/64 | SCALE FULL SIZE

[redacted]

AC
NAVY NOTED | NOTED | [illegible] | C-P
MATERIAL | SPEC. | HEAT TREAT | FINISH
DRAFT | CHECK | ENGR. | [illegible]

CONSOLIDATED AIRCRAFT CORP. SAN DIEGO, CALIF.

NAME BRACKET ASSY TOW'R HOIST ADAPTER

OPP. HAND 28A3006-1

DWG. G 28A300[6]

LET	ALTERATION	DATE	BY
H	TRACED NO WT CH'G	7-3-42	ELLISTON

PAINT BLACK LETTERS 1/4" HIGH "LOCATE ℄ OF STRAP 31 3/4" F'WD OF ℄ OF STOP BOLT HOLE ON TORPEDO"

(-4)

(-5) WELD ASS'Y

(-3) REF.

28A5105

2/32

11 5/8 R.

1 R.

13/32 DIA. HOLE

3

2

1/2 R.

1 R.

NO WELD WITHIN 3/8 OF CENTER OF HOLE ON OPPOSITE SIDE OF NUT.

22 7/16 DIA

28A5105 AN6-14A BOLT AN315-6R NUT

AN315-6R NUT RETAP 3/8-24 NF-1 AFTER WELDING

1 3/8

3 5/8

3 1/2

1 R.

1/2

(-3) INSTALLATION TYPICAL EXCEPT FOR POSITION OF NUT

3/8

LINE HOLES BEFORE WELDING

AN6-11 BOLT

BEND LINE

(-2)

NO WELD

5/8 DIA. HOLE C'SINK 1/8 x 45°

℄ SYM. EXCEPT FOR WELDED NUT

3/8

11/16

NO WELD ON BEND LINE

NO WELD INSIDE LUGS

28A2028 NUT

28A2031 LOCK

28A2027 BOLT

NO WELD

PAINT BLACK LETTERS 1/4 HIGH "SLIDE THIS END BETWEEN LUGS OF TORPEDO WHEN REMOVING BAND

STAMP PART NO.

GROUND EQUIP DO NOT INCLUDE IN WEIGHT OF SHIP

MCR. 200-1
C-70496 C-77713 & C-88476 ONLY
C-91876 #91 & ON
C-70496 #11 & ON & 91878 #1-90
C-70496 #1 TO 10 -

2 1/4

1/8

3/16

1 1/8

1

1 1/4

1 1/4 R.

DETAIL -2
BEND & CORNER RADII 1/8

FINISH CODE	
Z	ANODIC TREATMENT
P	P-27 PRIMER
GP	GREEN PRIMER
C	CADMIN PLATE

AN315-6R				2
-4	.064 x 71/8 x 17/8	C.M. SHT	47514	1
-5	.064 x 31/16 x 3 1/2	C.M. SHT	47514	1
-2	.125 x 27/16 x 5 1/8	C.M. SHT	47514	1
-3	WELD ASSY			1

AN315-6R				2
AN6-14A				2
AN6-11				2
28A5105				2
28A2031				1
28A2028				1
28A2027				1
-3	WELD ASSY	SH27-6		1

PART No	STOCK	MATERIAL	SPEC.	LH REQ.	RH REQ.	LH REQ.	RH REQ.	LH REQ.	RH REQ.
PARTS LIST PER ASSY.				-0		-2		-3	-4 -5

ASSY DASH NO.	MODEL	NEXT ASSY	NOS.
28A5-3A	28A5105		1
28A-3A	28A3001		1
28A-3	28A5105		1
28A-3	28A3001		1
28A-3	28A3001		1
28A-4	28A3001		1
28A-5	28A3001		1

REQUIREMENTS PER AIRPLANE

SUPERSEDES 28A3008	5-1-37	LCM	
REPLACED BY		ACT. QTY.	
UNLESS OTHERWISE SPECIFIED DIMENSIONS ARE IN INCHES	SCALE 6"=1'-0"		
STAMP PART NUMBER WHERE SHOWN			

A C			7-1-37	LCM				LCM	LC
NAVYNORMALIZE	C-PLATE			TRACED				CHECKED	CHK.
HEAT TREAT	FINISH	DRAFT		DESIGN	STRUCT	STAT.		APPROVED	

NAME BAND ASSY ARM'T-TORPEDO HOISTING

CONSOLIDATED AIRCRAFT CORP. SAN DIEGO, CALIF.

CAP. HAND

SIZE G

DWG. 28A3008

SUPPLIES & EQUIPMENT CLASSIFICATION			
LET	ALTERATION	DATE	BY
A	29-2014-5 W.O. 28A014-2	5-5-39	[illegible]
B	REMOVED 28A032-2	5-16-39	RWS
C	RELOCATED VERY'S PISTOL HOLD FR. AMM. CONTAINER SMOKE GREN. ADE HOLDER & HANDLE	5-16-39	RWS
D	REMOVED 28A014-4 ANGLE # 11 & DIM. LOCATING IT	11-11-40	[illegible]

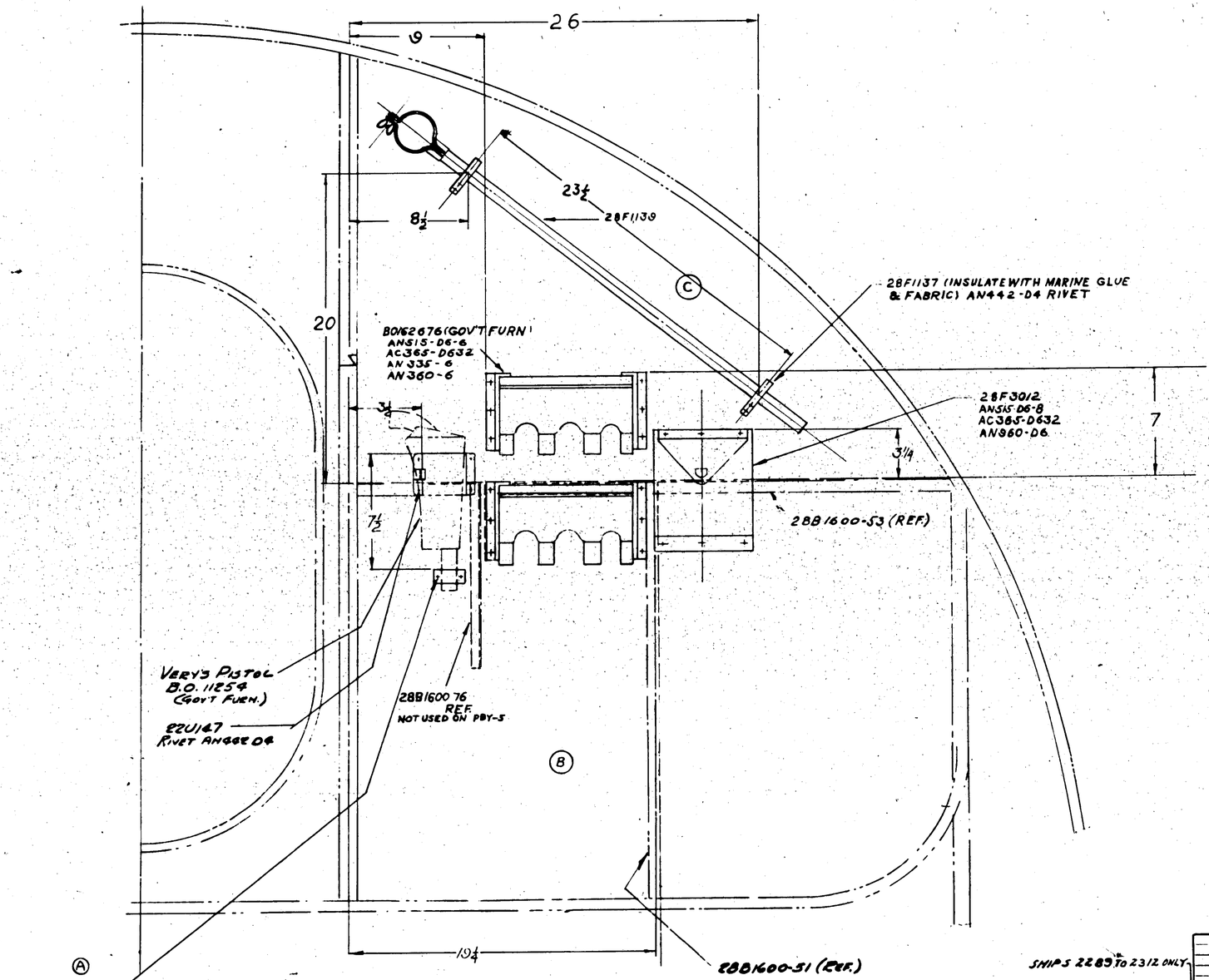

NOTE:- THIS DWG. REPLACES 28A032-5 SMOKE GRENADE INST. & 28A014 REAR VERY'S PISTOL INST. ON BULK'D #6 ONLY

PLANES #1241-1243 (23-31)
CONTRACT CHG "U"
J.O. 930-97

GOV'T FURN.

PART NUMBERS	LH	RH	LH	RH	LH	RH	LH	RH	LH	RH
B0162676	8									
B011254	1									
AN960-D6	8									
AN515-D6-8	8									
AN515-D6-6	12									
AN442-D5	-									
AN442-D4	-									
AC365-D632	20									
28F3012	1									
28F1139	1									
28F1137	2									
28A014-5	1									
28A014-4	1									
22U147	1									

SHIPS 2285 TO 2312 ONLY

ASSEM. NO.	MODEL	NEXT ASSY.
PBY-5	28U1000	

REQUIREMENTS PER AIRPLANE

AC				
NAVY				
MATERIAL	SPEC.	HEAT TREAT	FINISH	

NOTED — REPLACES — REPLACED BY — GOVT. WT. — ACT. WT. — SCALE

CONSOLIDATED AIRCRAFT CORP. SAN DIEGO, CALIF.

INSTAL.-ARM-REAR VERY'S PISTOL & AMM. CONTAINER-SMOKE GRENADE

Clayton 5-8-39 DRAFT — CHECK — EXAM. — ENG.

OPP. HAND

SIZE G — 28A4080

LET	ALTERATION	DATE	BY	LET	ALTERATION	DATE	BY

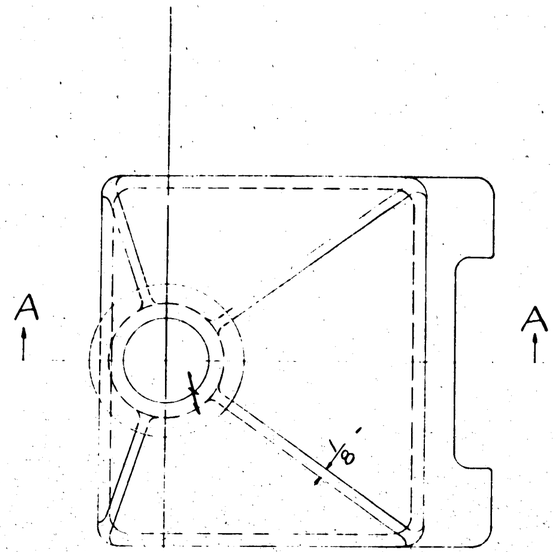

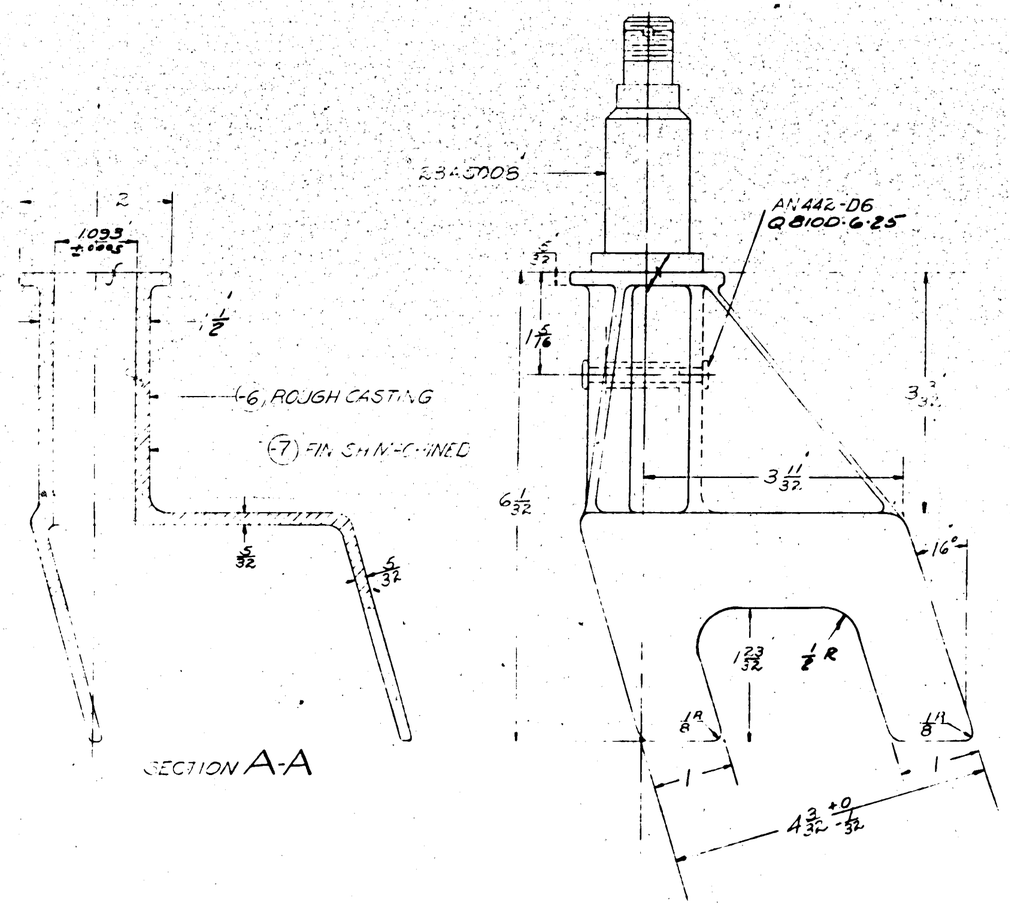

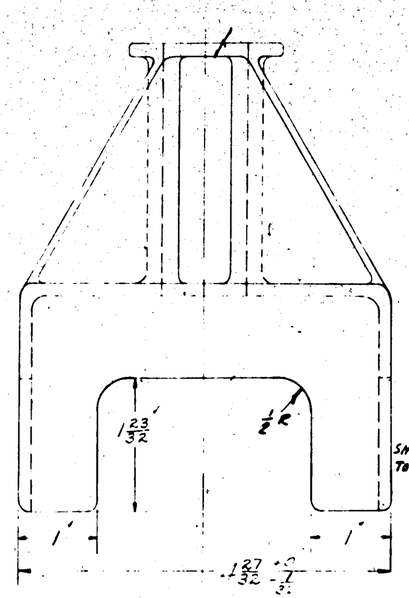

SHIP 2289 TO 2312 ONLY

$ INDICATES SMOOTH MACHINE FINISH
ALL RADII TO BE 1/4 - UNLESS OTHERWISE SPECIFIED

ASSY DRAW. NO.	MODEL	NEXT ASSY.	REQ.
	PBY-5	28A5003-2	

REQUIREMENTS PER AIRPLANE

REPLACES — Engg. Wy.

REPLACED BY — Acct. Wy.

Layout on Engineering Drawings Unless Otherwise Specified: 1/32 & ±1°

SCALE: 12"=1"

STAMP PART NUMBER WHERE SHOWN

PART No.	STOCK	MATERIAL	SPEC.	LH REQ.	RH REQ.	LH REQ.	RH REQ.	LH REQ.	RH REQ.	LH REQ.	RH REQ.
PARTS LIST PER ASSY.				-0	-2	-3	-4			-5	
28A5015	CASTING	AL ALLOY	CLASS 4	1		1				1	
-7	FINISHED CASTING			1		1				1	
28A5008				1		1				1	
AN442-D6				1		1				1	
Q8100-6-25				1		1				1	

AC								
NAVY 29000 #/in²	Z-P	Vol 3/1/39		C				
HEAT TREAT	FINISH	DRAFT	CHECK	STRUCT	MAT	APPROV	ENG	

NAME HOLDER, POST-ARMAMENT-SIDE GUN ADAPTER

CONSOLIDATED AIRCRAFT CORP. San Diego, Calif.

OPP. HAND

SIZE G

28A5015

E.O. 24808A

LET	ALTERATION	DATE	BY	LET	ALTERATION	DATE	BY
A	TOLERANCE 28B1331 REPLACES 28B1330 IN DIM. 1.881 ADDED. FINISH TO TOP SURFACE. 28B1331						

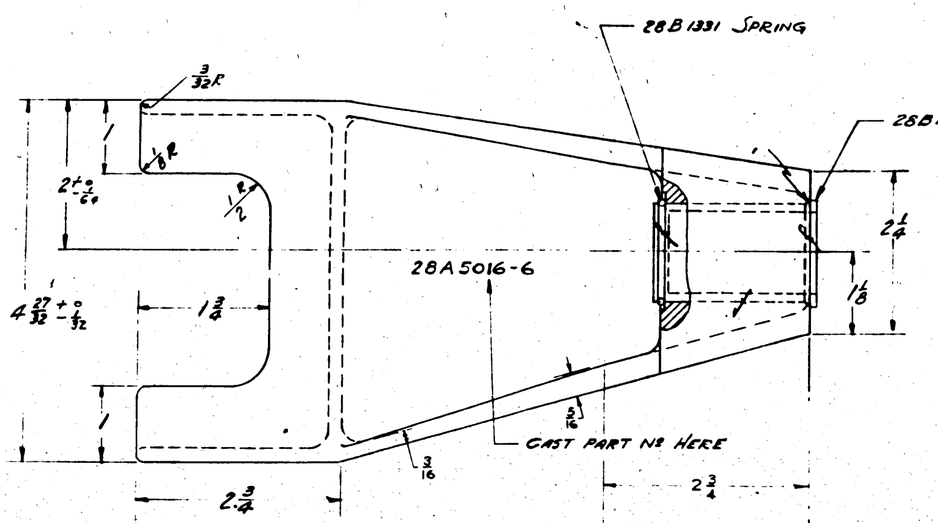

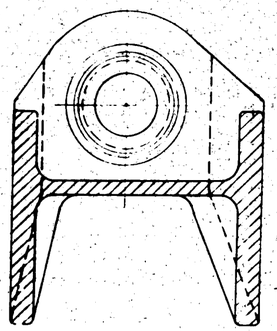

SECTION A-A

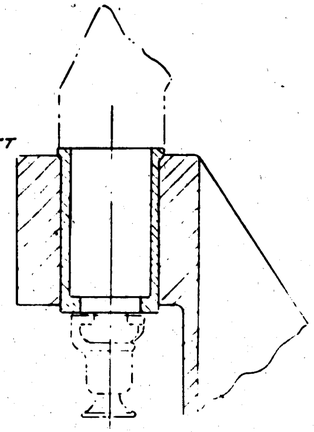

SECTION B-B
ENG. INFO. ONLY

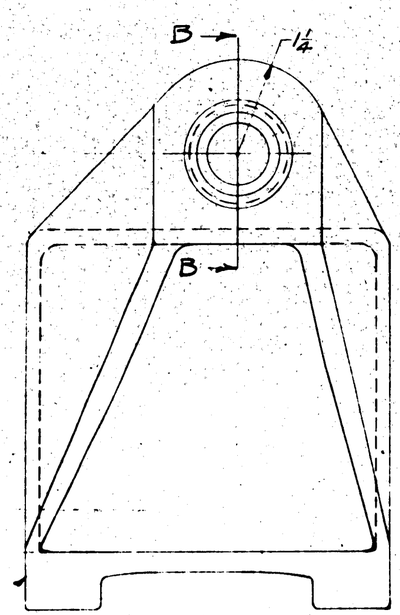

NOTE:- (ENG. REF.)
THIS HOLDER ACCOMMODATES YOKE REQUIREMENTS AS SET FORTH ON BUREAU OF ORDANCE SKETCH NO 84005 SEE SECT. B-B

NOTE:-
WALL THICKNESS 3/16 UNLESS OTHERWISE SPECIFIED.
ALL RADII TO BE 1/4 - UNLESS OTHERWISE SPECIFIED.

-6) L. ROUGH CASTING
-6) R.
-7 L. FINISH MACHINE CSTG
-7 R.

NIS. + CODE	
Z	ANODIC TREATMENT
P	P-27 PRIMER
AP	ALUMINIZED PRIMER
C	CADMIUM PLATE

INSTALL ON PBY-5 AIRPLANES #2913 ON

ASSY DASH NO.	MODEL	NEXT ASSY USED
REQUIREMENTS PER AIRPLANE		QUAN. REQ'D
REPLACES		
REPLACED BY		ASSY REQ'D
LIMIT AS DIMENSIONED UNLESS OTHERWISE SPECIFIED: .XX ± 1/64 .XXX ± .010	SCALE 12"-1'0"	
STAMP PART NUMBER WHERE SHOWN		

PART NO	STOCK	MATERIAL	SPEC.	LH REQ.	RH REQ.	LH REQ.	RH REQ.	LH REQ.	RH REQ.	LH REQ.	RH REQ.
PARTS LIST PER ASSY.				-0	-2	-3	-4	-5			
-7R	MAKE FROM -6R				1						
-7L	MAKE FROM -6L					1					
-6R	CASTING	AL. ALLOY 4241 CL. 4					1				
-6L	CASTING	AL. ALLOY 4241 CL. 4						1			
-R 28-5AMN	28A5012			1							
-L 28-5AMN	28A5012				1						
-R 28-6AMC	28A5012					1					
-L 28-6AMC	28A5012						1				
-R 28-5MC	28A5012							1			
-L 28-5MC	28A5012								1		
-R 28-6MA	28A5012									1	
-L 28-6MA	28A5012										1
-R 28-5MB	28A5012			1							
-L 28-5MB	28A5012				1						
-R 28-6MB	28A5012					1					
-L 28-6MB	28A5012						1				
-R PBY-5AMB	28A5012			1							
-L PBY-5AMB	28A5012				1						
-R PBY-5 MASCOR				1							
PBY-5 MASCOR					1						

28B1331
28B1330

A C		DRAWN	CHECK	STRUCT	MAT	APPROV	ENG
NAVY 29,000 PSI	Z-P	6-13-44					
HEAT TREAT	FINISH	DRAFT	CHECK	STRUCT	MAT	APPROV	ENG

NAME HOLDER-ARMAMENT-SIDE GUN MOUNT
CONSOLIDATED AIRCRAFT CORP. San Diego, Calif.

OPP. HAND 28A5016-R

SIZE G | DWG. NO. 28A5016

LET	ALTERATION	DATE	BY
A	TOLERANCE NOTE ADDED.	8-22-40	[illegible]
B	54° ANGLE WAS 53½°	11-7-40	[illegible]
C	GLASS THICKNESS .125 WAS .100. INT. CHGS. NOTED.	1-19-42	[illegible]

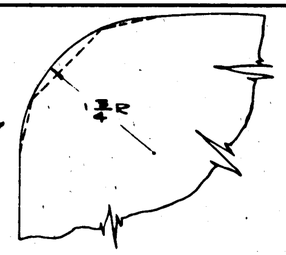

ROUND OR SHARP CORNERS OPTIONAL F'W'D END ONLY

12"=1'-0"

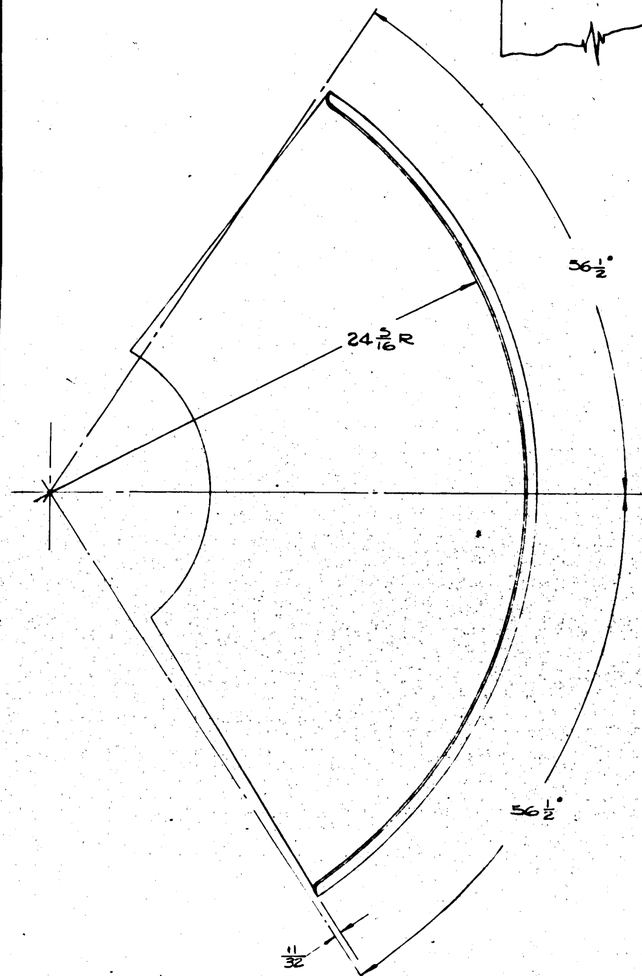

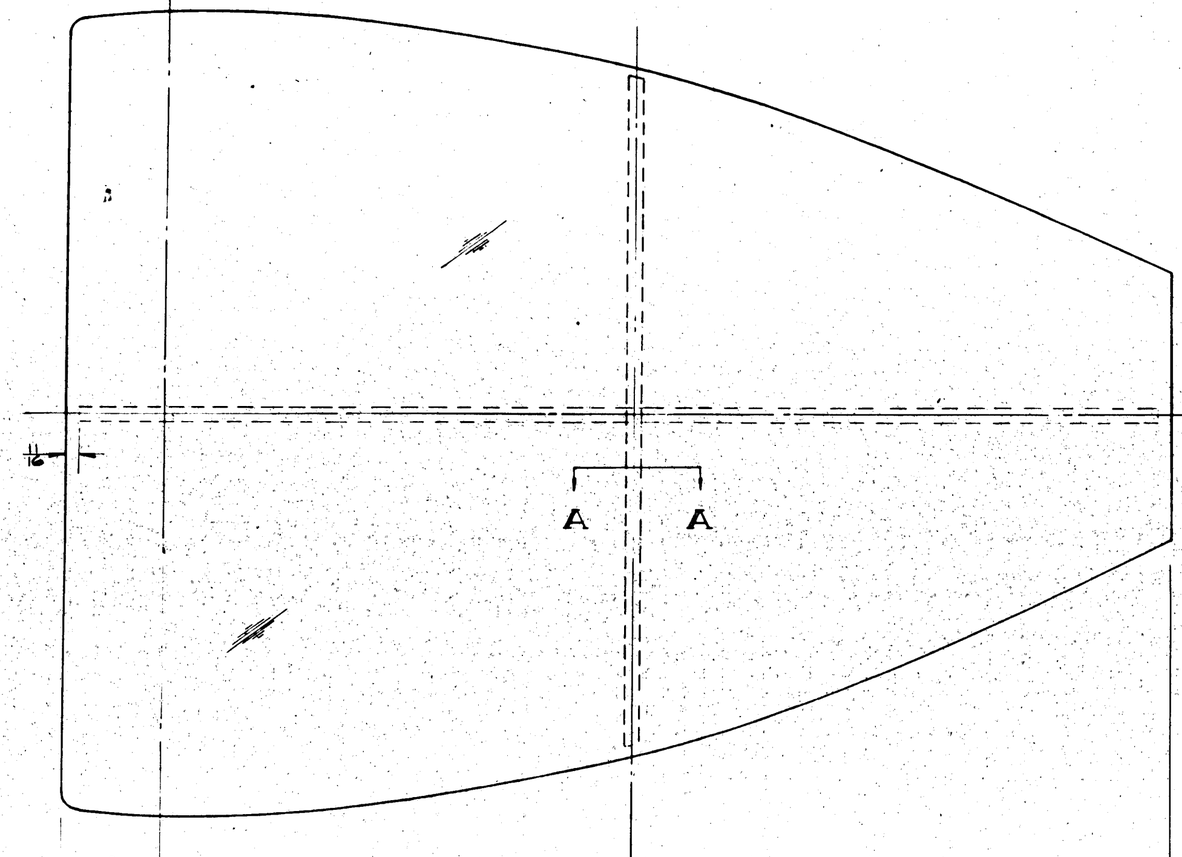

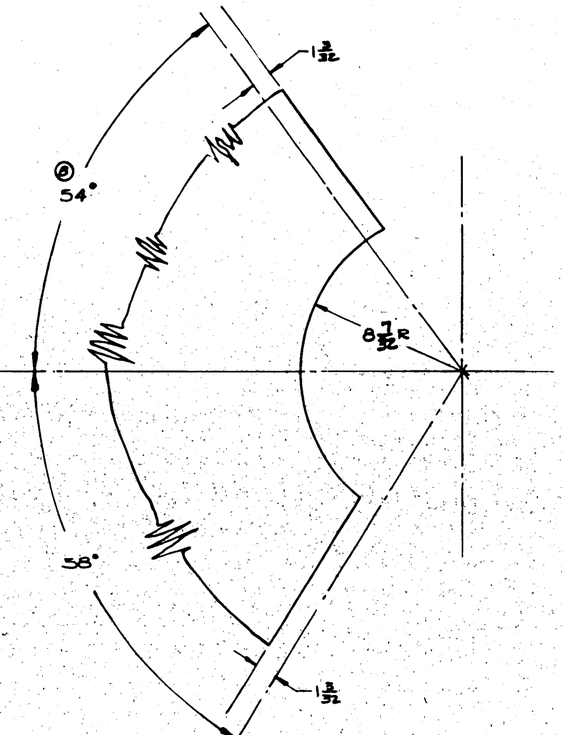

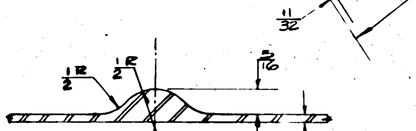

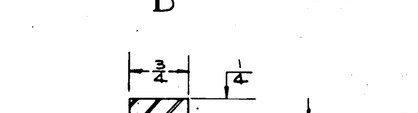

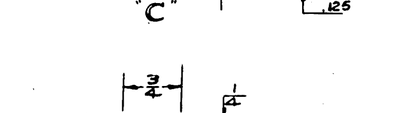

SEC. A-A SCALE 12"=1'-0"

GENERAL NOTES

1. SEC. "A-A"-B OR "A-A"-D TO BE USED IF GLASS IS FORMED OR MOLDED IN ONE PIECE.
2. SEC. "A-A"-C TO BE USED IF GLASS IS FORMED IN SECTIONS.
3. GLASS TO BE ACRYLIC PLASTIC
4. REF. D'W'G. 28A5021
5. RADIAL DIM'S ARE ± 1/8

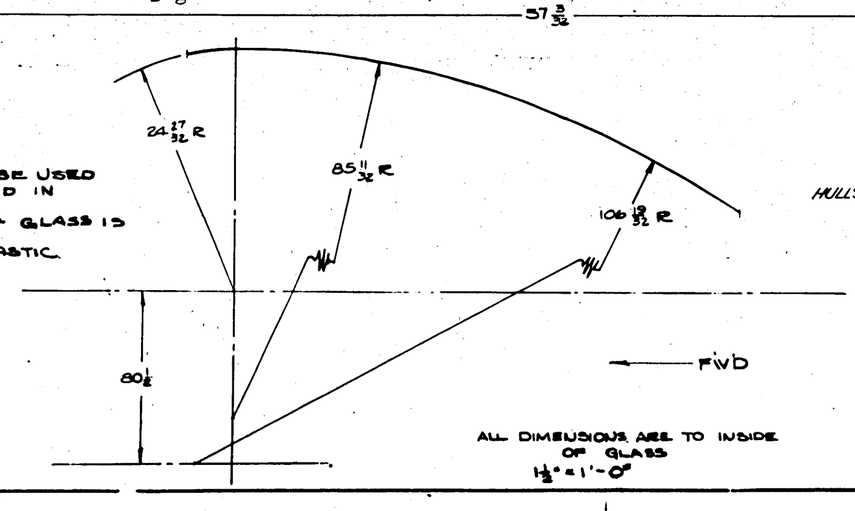

ALL DIMENSIONS ARE TO INSIDE OF GLASS
1½"=1'-0"

HULLS #170 #750

ASSY DASH NO.	MODEL	NEXT ASSY	REQ'D
-R	28-5ME	28A5021	1
-L	28-5ME	28A5021	1
-R	28-5MA	28A5021	1
-L	28-5MA	28A5021	1
-R	PBY-5	28A5021E	1
-L	PBY-5	28A5021	1

REQUIREMENTS PER AIRPLANE

REPLACED

REPLACED BY

CALC. WT.

ACT. WT.

SCALE NOTED @ 3/4"=1'-0"

STAMP PART NUMBER WHERE SHOWN

PART No.	STOCK	MATERIAL	SPEC.	LH REQ.	RH REQ.	LH REQ.	RH REQ.	LH REQ.	RH REQ.	LH REQ.	RH REQ.
PARTS LIST PER ASSY.				-0		-2		-3		-4	-5
-6	.125	ACRYLIC PLASTIC	P-61	1	1						

A.C. NAVY

HEAT TREAT FINISH

DRAFT [illegible] 11-6-39 CHECK [illegible] 11/7/39 STRUCT [illegible] 11/7/39 MAT. [illegible] APPVD [illegible] ENG [illegible]

NAME GLASS-ARM-OUTER ROTATING SHIELD-WAIST GUN TURRET

CONSOLIDATED AIRCRAFT CORP. San Diego, Calif.

OPP. HAND 28A5026-6

SIZE G

28A5026

LET	ALTERATION	DATE	BY
A	MADE -6 SHORTER, O/A WAS 13 3/64 (REMOVED "FOR INCL'S 3	12-24	
B	R.F.M., SU FLANGE 8 PLACES		
C	ADDED USAF 5000 L		
D	ADDED -3 ASS'Y. -11 L TABULATED A.R.C. & D. SYMB. ADDED ROUTE SYM. DA-9 FBY-5B	11-1941	
E	Q4303-AD6 was AN442-D6 WT CHG NEG.	8-17-43	

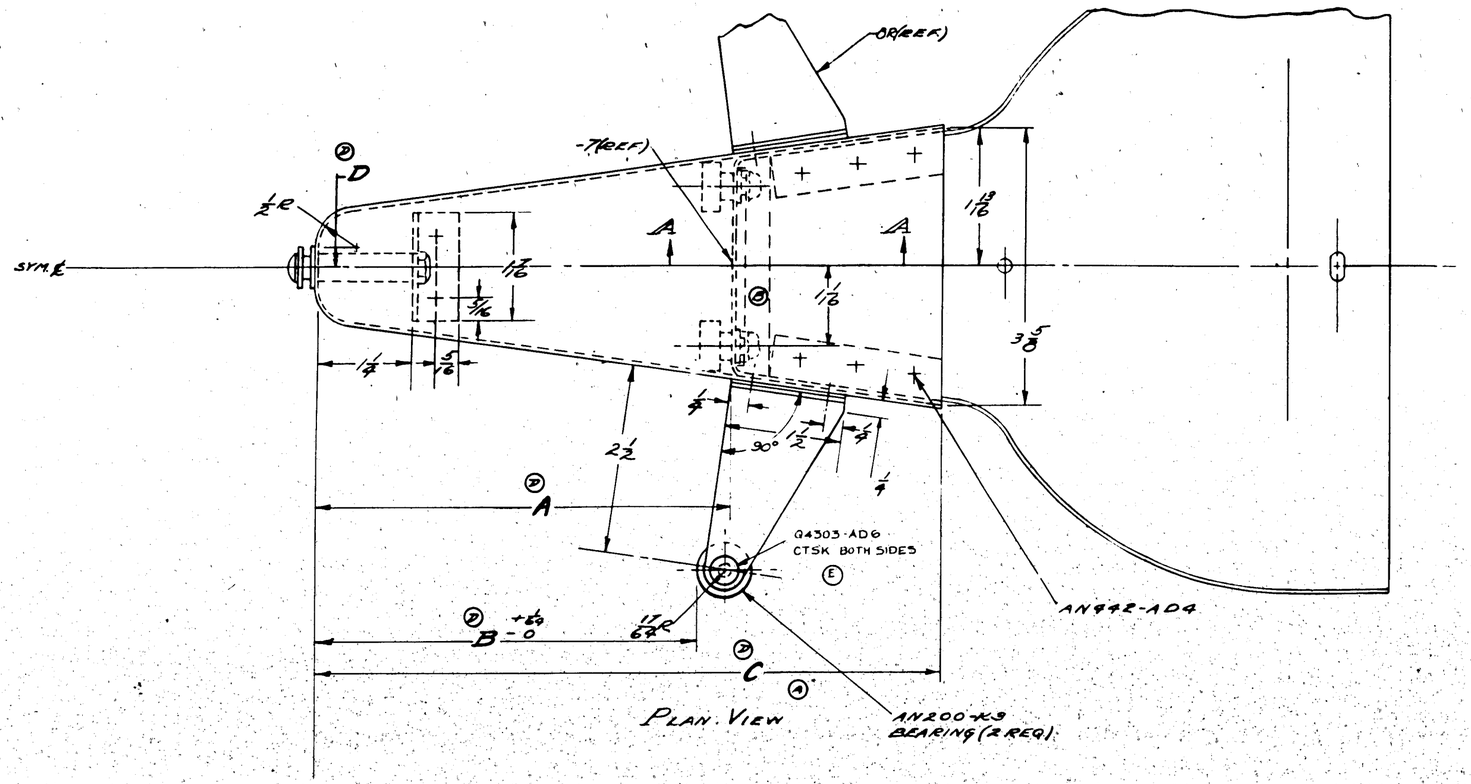

DASH NO.	DIM. A	B	C	D
-0	5 1/2	5 1/8		
-2	4 1/2	4 3/32		
-6			8 1/4	1/4
-11			7 5/16	3/8

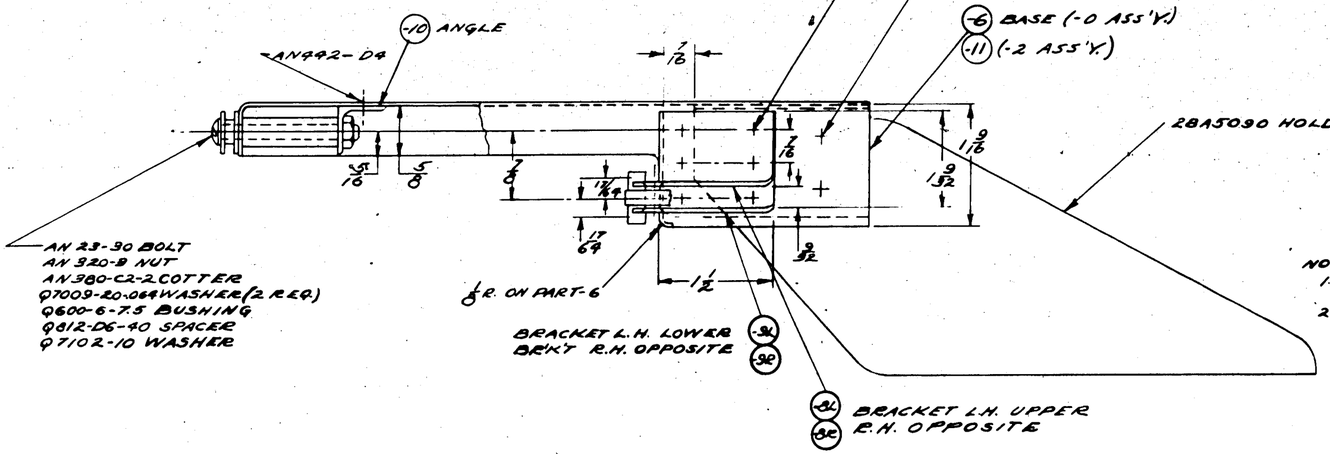

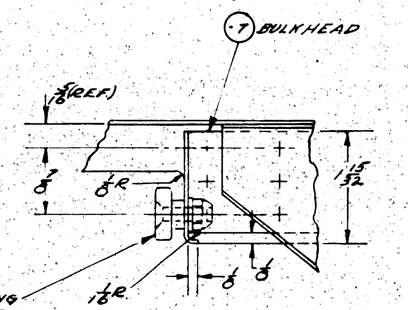

NOTE: THIS DWG IS AS PER NAF #68239

NOTES:-
1. ALL BEND RADII 9/32 R EXCEPT AS NOTED
2. FINISH Z-P-[illegible] BEFORE INSTALLING BEARINGS

C31876
C70496

PART No	STOCK	MATERIAL	SPEC.	LH RH REQ. -0	LH RH REQ. -2	LH RH REQ. -3	LH RH REQ. -4	LH RH REQ. -5
Q4303AD6								
Q7007-12-064				2	2			
Q7009-20-064				2	2			
Q7102-10				1	1			
Q812D6-40				1	1			
Q600-6-7.5				1	1			
AC365-1032				2	2			
AN200-K3				2	2			
AN442-D4				1	1			
AN442-D6				1	1			
AN442-D8				1	1			
AN380-C2-2				1	1			
AN320-8				1	1			
AN23-90				1	1			
#22F1174 BEARING				2	2			
28A5090				1	1			
28B1232 SCREW				2	2			
-11 .040X9 X 13	ALCLAD	24ST	AMS	1	1			
-10 AC 365-1032 .040X9 X 13	AL ALLOY	24ST	T	1	1			
-9 .063X10X13	ALCLAD SHT	24ST	T	1	1			
-8 .063X10X13			T	1	1			
-4 .063X10X13			T	1	1			
-3 .063X10X13			T	1	1			
-2 .063X10X13			T	1	1			
-7 .063X10X13			A	1	1			
-6 .080X10X12	ALCLAD SHT	24ST	A	1	1			

ASSY DASH NO.	MODEL	NEXT ASSY	REQ.
-2	FBY-5	28A5054	1
0	FBY-5	28A5054	1

REQUIREMENTS PER AIRPLANE
REPLACES
REPLACED BY
ACT. QTY.

LIST OR DRAWINGS UNLESS OTHERWISE SPECIFIED — SCALE 1/32 — STAMP PART NUMBER WHERE SHOWN

SCALE 12"=1'-0"

PARTS LIST PER ASSY.

FINISH COL.
- GREEN PRIME
- ANODIC TREAT
- ZINC CHROMATE PRIMER
- ALUM. INZED PRIMER
- CADMIUM PLATE

AC
NAVY NONE
HEAT TREAT
NOTED
FINISH

DRAFT	CHECK	STRUCT	MAT.	APPROV	ENG.
11-21-39					

NAME CARRIAGE ASSEM- MK XXVIII-TORP. DIRECTOR

CONSOLIDATED AIRCRAFT CORP. SAN DIEGO, CALIF.

OPP. HAND

SIZE G — 28A5053

28A5053

LET	ALTERATION	DATE	BY

LET	ALTERATION	DATE	BY
A	CHG ATTACH TO CONFORM WITH CHG IN CARRIAGE FROM 28A5053 TO 28A5053-2 & ADD 28A5053-1 & -2 ASS'YS. W/ANGLE & REVISE MARKING		
B	ADDED NOTE & GOVT. FURN ---- PBY5A C13595 NO WT. CHG	4/12/43	ADLING

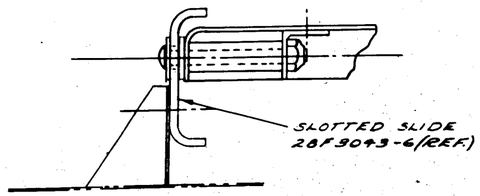

SECTION A-A
SCALE: 12"=1'-0"

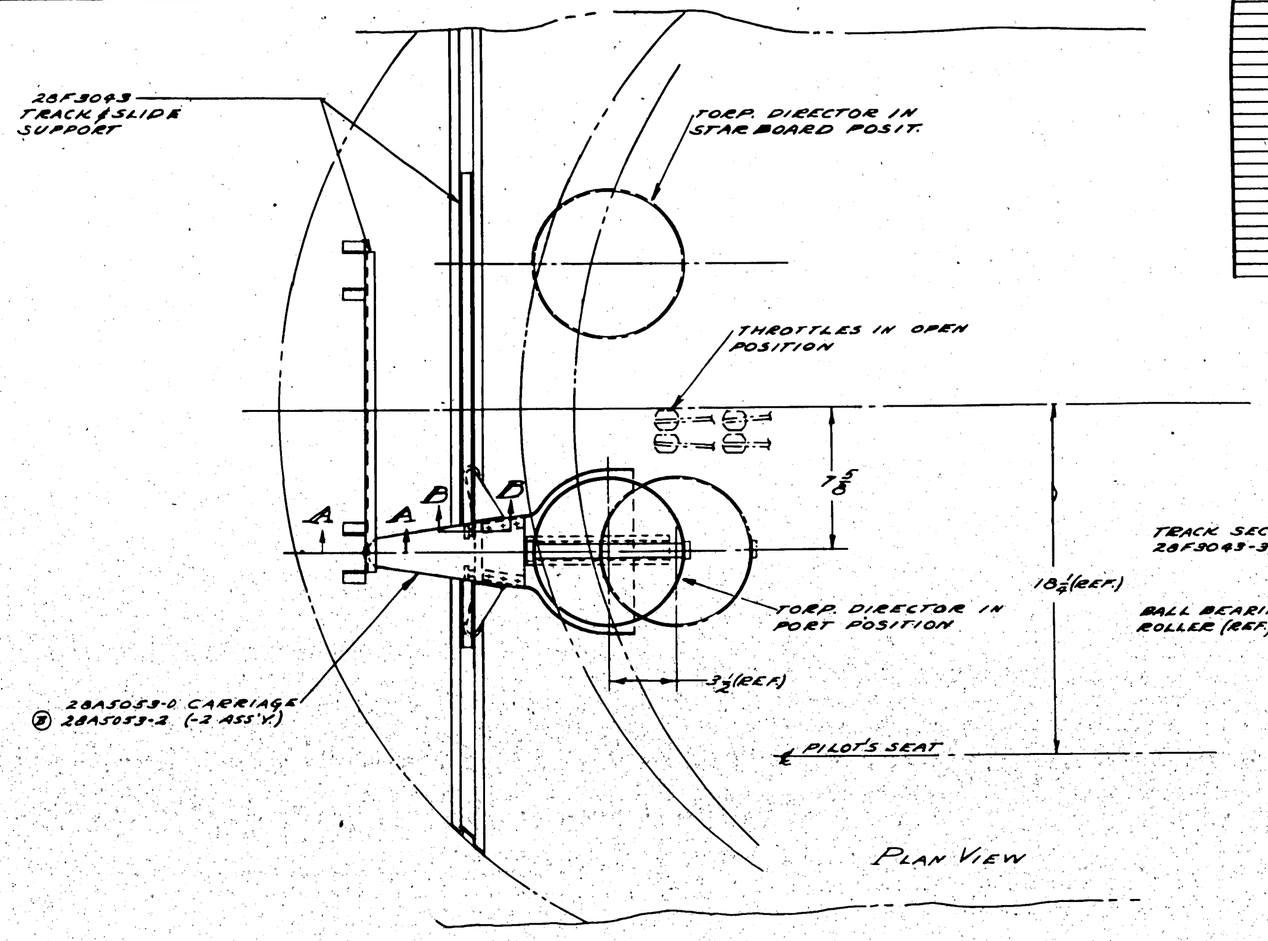

PLAN VIEW

DUE TO DIM. LIMITATIONS OF PILOT'S ENCLOSURE IT SEEMS ADVISABLE THAT FOR EXTREME TARGET ANGLES OFF THE BOW THE PORTSIDE PILOT SIGHT TARGETS OFF THE STARBOARD BOW & VICE VERSA

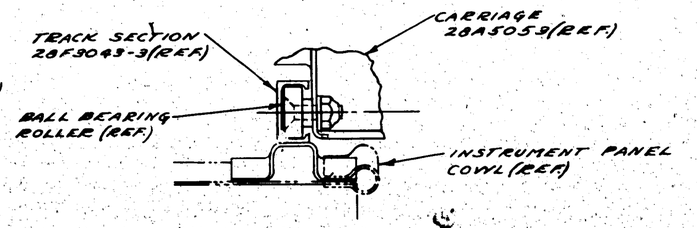

SECTION B-B
SCALE: 12"=1'-0"

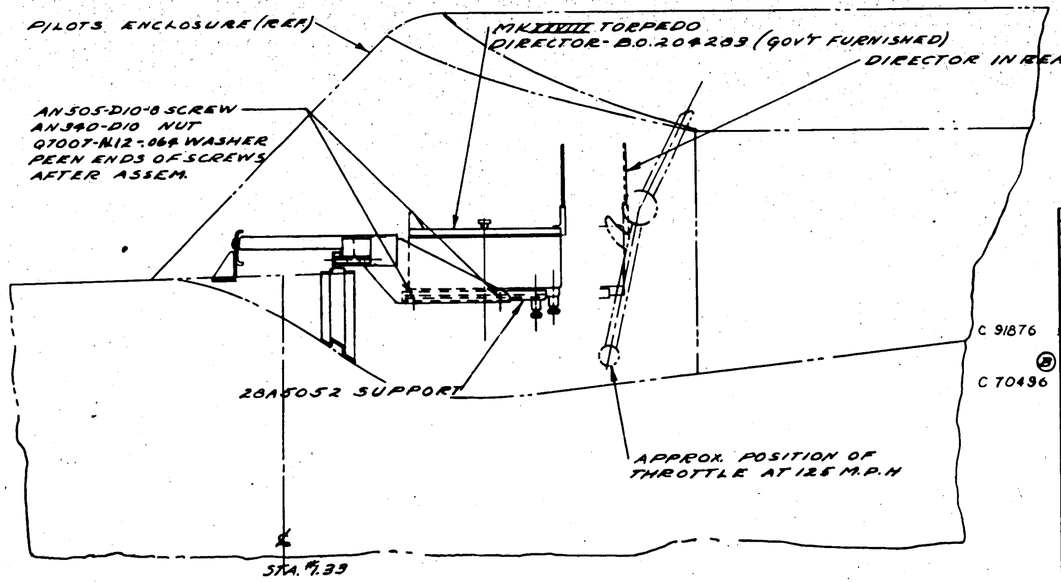

PORT SIDE VIEW

NOTE: THIS INSTALLATION IS AS PER NAF DWG #68239

* GOVT. FURNISHED EQUIP. & CONTRACTOR
© INSTALLED FOR PBY5 C91876 → 91 & ON & PBY5A C13595 (B)

PART No.	STOCK	MATERIAL	SPEC	Lt RH REQ. -0	Lt LH REQ. -2	Lt RH REQ. -3	Lt LH REQ. -4
	QTOOT-N12-064				2		2
	AN 340-D10				2		2
	AN 505-D10-8				2		2
	28F3049			1		1	
	AO 20#203 *			1		1	
	28A5053-1				1		
	28A5053-0			1		1	
	28A5052			1		1	
	-6						

PARTS LIST PER ASSY.

ASSY DASH No.	MODEL	NEXT ASSY	REQ.
-2	PBY-5	28F1002	1
-2	PBY-5A	28F1002	1
-0	PBY-5	28F1002	1

REQUIREMENTS PER AIRPLANE

REPLACES — CALC. WT.

REPLACED BY — ACT. WT.

LIMIT OR DIMENSIONS UNLESS OTHERWISE SPECIFIED: ± 1/32

SCALE: 3"=1'-0" & FULL

STAMP PART NUMBER WHERE SHOWN

A C
NAVY NONE
HEAT TREAT

NONE
FINISH

DRAFT 11-21-42 | CHECK | STRUCT | MAT. | APPROV

NAME: INSTALL - MK XXVIII TORPEDO DIRECTOR

CONSOLIDATED AIRCRAFT CORP. SAN DIEGO, CALIF.

OPP. HAND

SPEC. G

SIZE 28A5057

LET	ALTERATION	DATE	BY
A	Q818-6-32 NF WAS Q818-10-32		
	Q820-8-32 NF WAS Q818-12-32		
B	-11 WAS ONE REQ'D.	4-24-41	K.H.G.
C	DIM. BETWEEN -12 & -15 PLATES	4-24-41	K.H.G.
D	W.A.S. 3/16 CHGD TO 1/16 REMOVED "R.Y. 12,000 T.S."	4-7-41	CLAY
E	ON DWG. CHANGED LOCATION OF -8	7-8-41	CLAY
F	ADDED NOTE "ALTERNATE ---" COND'N. WT. CHG. NEG.	7-1-42	COWLES
G	NORMALIZE" WAS "NORMALIZE AFTER WELDING" NO WT. CHG.	9-26-42	WILLIAMS
H	ADDED NOTE #2. NO WT. CHG.	1-13-43	ROSS
J	(1) DEL. "WELDED C.M. STL. TUBE" ("4130" WITH "NOTED" AT -6, -7, -8, -9, -10, -11 ON FACE REVISED NOTE 1: "ALTERNATE MATERIALS FOR -7, -8, -9, -10, -11 CHROME-MOLY WELDED TUBING, AN-T-3 TYPE 1, COND N" & "CHROME-MOLY SEAMLESS TUBING, AN-WW-T-850 COND N." TO READ "MATERIAL FOR -6, -7, -8, -9, -10, & -11 MAY BE: (A) S.A.E. A4130 CHROME-MOLY	3-26-43	RUNGE

LET	ALTERATION	DATE	BY
	WELDED STEEL TUBING, SPEC. AN-T-3, OR		
(B)	X4130 CHROME-MOLY SEAMLESS STEEL TUBING, SPEC. AN-WW-T-850." NO WEIGHT CHG.	10-13-43	NO DIM.

E.O. 22798
E.O. 16561
PBY-5

DETAIL A
FULL SIZE

-15 PLATE
-6 TUBE
DRILL 25/64 (.391) AFTER WELDING - 4 PLACES ONLY.
-7 TUBE
-9 TUBE
-8 TUBE
-16 END
-11 TUBE
-10 TUBE
-17 BRACKET 1/16 BEND RADII DRILL F (.257)
-13 PLATE
-14 PLATE
-12 PLATE
28A2040 STUD
Q818-6-32NF SPACER (1) LINE DRILL 5/16 (.312)
Q820-8-32 NF SPACER (A)
SYM. ℄
NORMALIZE
VIEW A-A FULL SIZE

DRILL #52 (.063) ONE HOLE WITHIN 1/2 INCH OF EACH END OF EACH TUBE FOR DRAIN HOLES. PLUG WITH AN535-0-2 SCREW

Note: GENERAL UTILITY; Not included in weight empty of Airplane.

FINISH CODE	
Z	ANODIC TREATMENT
P	P-27 PRIMER
AP	ALUMINIZED PRIMER
C	CADMIUM PLATE

HRO - HOT RAW LINSEED OIL

(F) * —NOTE—
1. MATERIAL FOR -6, -7, -8, -9, -10 & -11 MAY BE:
(A) S.A.E. X4130 CHROME-MOLY WELDED STEEL TUBING, SPEC. AN-T-3 OR,
(B) X4130 CHROME-MOLY SEAMLESS STEEL TUBING, SPEC. AN-WW-T-850.

(H) 2. EFFECTIVE WITH FIRST AIRPLANE ON MCR 2588 THIS PART IS RELEASED FOR EVERY THIRD PBY-5A AIRPLANE. EFFECTIVE ON ALL PBY-5A AIRPLANES PRIOR TO MCR. 2588.

ASSY DASH NO.	MODEL	NEXT ASSY	REQ.
	PBY-5A	28A5080	1
	PBY-5A	28A5080	1
	PBY-5	28A5080	1

REQUIREMENTS PER AIRPLANE
REPLACES
REPLACED BY
CALC. WT.
ACT. WT.
LIMIT DIMENSIONS UNLESS OTHERWISE SHOWN ± 1/32
SCALE 6" = 1'-0"
FINISH NOTED
STAMP PART NUMBER WHERE SHOWN

PART No.	STOCK	MATERIAL	SPEC.	LH REQ.	RH REQ.	LH REQ.	RH REQ.	LH REQ.	RH REQ.
AN535-0-2									18
Q820-8-32 NF									4
Q818-6-32 NF									2
28A2040									2
-17	.063 x / x 2	C.M. STL. SHT.	47514						2
-16	.063 x 5/8 DIA.	C.M. STL. SHT.	47514						4
-15	.063 x 1 5/8 x 1 5/8	C.M. STL. SHT.	47514						8
-14	.063 x 1/4 x 1 1/8	C.M. STL. SHT.	47514						4
-13	.063 x / x 1 1/4	C.M. STL. SHT.	47514						2
-12	.063 x 1 1/4 x 2	C.M. STL. SHT.	47514						4
-11	1/8 O.D. - .035 x 57/8	NOTED	NOTED						2
-10	1/8 O.D. - .035 x 24								1
-9	1/8 O.D. - .035 x 6								1
-8	1/8 O.D. - .035 x 9 7/8								2
-7	1/8 O.D. - .035 x 15								2
-6	1/4 O.D. - .049 x 29	NOTED	NOTED						2
	PARTS LIST PER ASSY.			-0	-2	-3	-4	-5	-6

A C
NAVY NOTED
HEAT-TREAT
C-HRO-P-AIR.
FINISH
BILLING 11-17-39
DRAFT
CHECK
STRESS
MAT'L
LAYOUT
ENG.
OPP. HAND
SIZE G
CODE
NAME BASE - TARGET TOWING REEL
CONSOLIDATED AIRCRAFT CORP. SAN DIEGO, CALIF.
28A5081

LET	ALTERATION	DATE	BY
A	ADDED NOTE "ALTERNATE-- --- COND. N" WT. CHG. NEG	8-3-42	MMR
B	NOTE "NORMALIZE-WELDING" WAS "NORMALIZE... 125,000 PS (NO WT CHG.)	1-18-43	DMCW
C	ADDED NOTE #2 NO WT CHG.	8-12-43	FMR

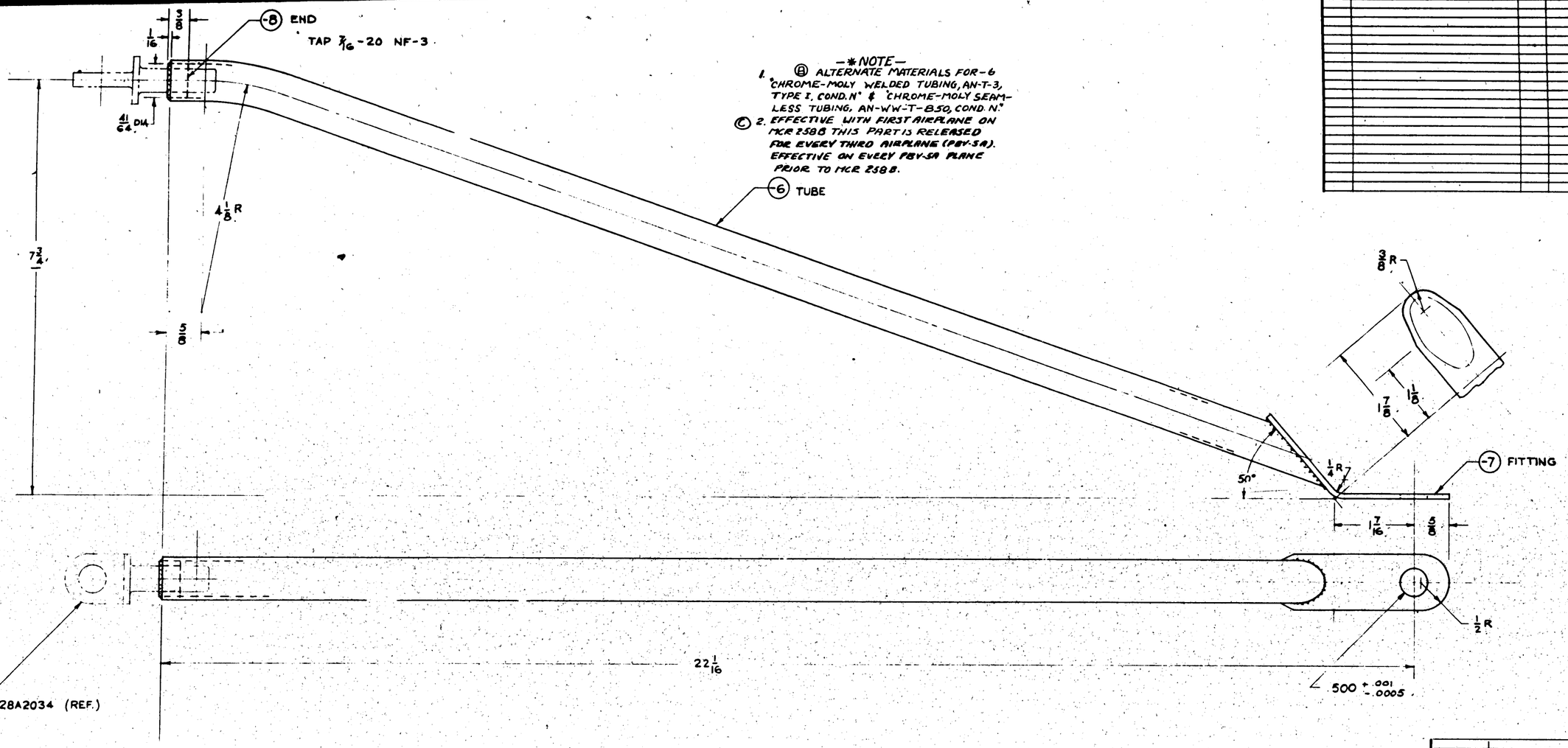

FINISH CODE	
Z	ANODIC TREATMENT
P	P-27 PRIMER
AP	ALUMINIZED PRIMER
C	CADMIUM PLATE

HRO - HOT RAW LINSEED OIL

Ⓑ NORMALIZE AFTER WELDING.

DRILL #52 (.063) ONE HOLE WITHIN 1/2 INCH OF CLOSED END OF TUBE FOR DRAIN HOLE. PLUG WITH AN 535-0-2 SCREW.

GENERAL UTILITY;

ASSY DASH NO.	MODEL	NEXT ASSY	REQ
SEE NOTE 2 →	PBY-5A	28A5080	2
	PBY-5	28A5080	2

REQUIREMENTS PER AIRPLANE

REPLACES

REPLACED BY

CALC WT

ACT WT

LAST OR SUBSEQUENT VALUES ON DRAWING ± 1/32 — SCALE 12" = 1'-0"

STAMP PART NUMBER WHERE SHOWN

PART No	STOCK	MATERIAL	SPEC.	-0 REQ.	-2 REQ.	-3 REQ.	-4 REQ.	-5 REQ.
AN535-0-2						1		
-8	5/16 DIA x 7/32 LONG	C.M. STL. BAR	46S22-A	1				
-7	.094 x 1 1/8 x 4 1/8	C.M. STL. SHT	4734	1				
* -6	3/4-.049 x 2 0	C.M. STL. TUBE	4418	1				

PARTS LIST PER ASSY.

AC		BILLING			
NAVY NOTED	C-HRO-P-AP	11-28-38		12/4/39	R
HEAT TREAT	FINISH	DRAFT	CHECK	STRUCT	MAT.	APPROV	ENG

NAME: STRUT - UPPER - TARGET TOWING REEL

OPP. HAND

CONSOLIDATED AIRCRAFT CORP. San Diego, Calif.

DWG. G

28A5082

LET	ALTERATION	DATE	BY

LET	ALTERATION	DATE	BY
A	ADDED NOTE: "ALTERNATE ---- COND. N° WT. CH6. NEG.	10-9-42	
B	REMOVED "HT 125,000 T.S." FROM NOTE "NORMALIZE AFTER WELDING." NO WT. CHG.	11-13-42	
C	REMOVED "NOTE" NORMALIZE AFTER WELDING" ADDED "HT 125,000 T.S." NO WT. CHG.	2-4-43	
D	ADDED NOTE "E." NO WT. CHG.	9-25-43	

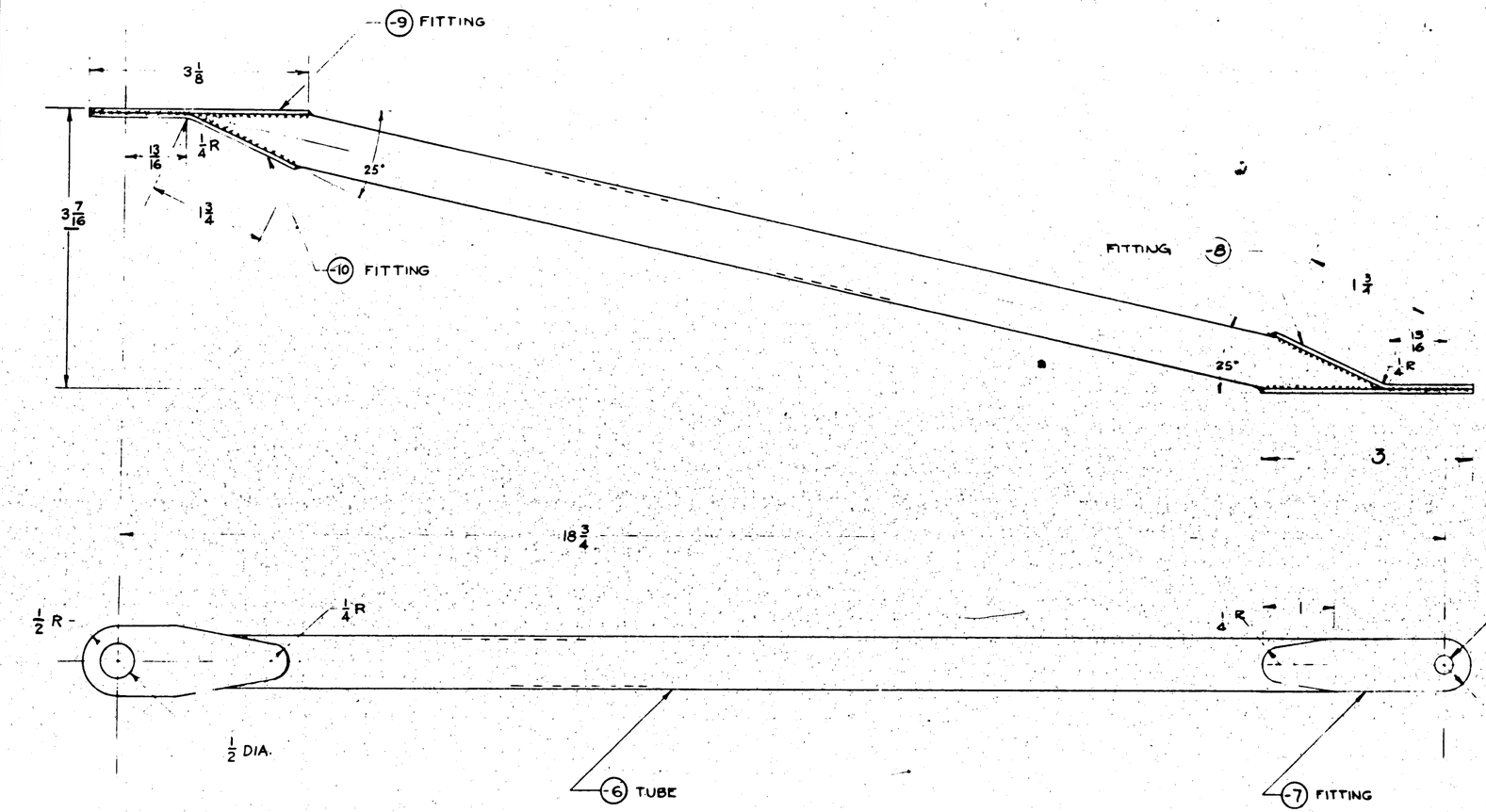

FINISH CODE

Z	ANODIC TREATMENT
P	P-27 PRIMER
AP	ALUMINIZED PRIMER
C	CADMIUM PLATE

HRO-HOT RUN LINSEED OIL

Ⓐ
✳ NOTE —
1. ALTERNATE MATERIALS FOR -6:
CHROME-MOLY WELDED TUBING, AN-T-3, TYPE I, COND. N
CHROME-MOLY SEAMLESS TUBING, AN-WN-T-850, COND. N.
Ⓓ 2. EFFECTIVE WITH FIRST AIRPLANE ON M.R. 2588 THIS PART IS RELEASED FOR EVERY THIRD PBY-5A AIRPLANE. EFFECTIVE ON ALL PBY-5A AIRPLANES PRIOR TO M.R. 2588.

Ⓒ Ⓑ
H.T. 125,000 T.S.

DRILL #52 (.063) ONE HOLE WITHIN 1/2 INCH OF EACH END OF TUBE FOR DRAIN HOLES. PLUG WITH AN 535-0-2 SCREW.

GENERAL UTILITY

PART NO	STOCK	MATERIAL	SPEC.	LH REQ.	RH REQ.	LH REQ.	RH REQ.	LH REQ.	RH REQ.
	PARTS LIST PER ASSY.			-0	-2	-3	-4	-5	
-10	.063 x 1/8 x 3/4	CM. STL. SHT	47314	1					
-9	.063 x 1/8 x 3/4	CM. STL. SHT	47314		1				
-8	.083 x 1/8 x 3/4	CM. STL. SHT	47314			1			
-7	.065 x 1/8 x 3/8	CM. STL. SHT.	47314				1		
✳ -6	1/8 OD x .049 x T/B	CM. STL. TUBE	44118					1	

SEE NOTE E → PBY-5A 28A5060 2 AN 535-0-2 2
PBY-5 28A5080 2

ASSY BLOW DIA. NO. | MODEL | NEXT ASSY | REQ.
REQUIREMENTS PER AIRPLANE
REPLACES | QUAL. QTY.
REPLACED BY | ASY. QTY.
LIMIT ON DIMENSIONS UNLESS OTHERWISE SPECIFIED ± 1/32 | SCALE 12" = 1'-0"
STAMP PART NUMBER WHERE SHOWN

A C			BILLING						
NAVY NOTED	C-HRO-P-RR.		11-17-39						
HEAT TREAT	FINISH		DRAFT	CHECK	STRUCT.	MAT.	APPROV.	DWG	
NAME STRUT - REAR - TARGET TOWING REEL									
CONSOLIDATED AIRCRAFT CORP. SAN DIEGO, CALIF.									

OPP. HAND
DWG. G
28A5083

PBY-5

LET	ALTERATION	DATE	BY
A	REVISED METHOD OF FASTENING STRAP TO CLIPS, CHGS. AN392E-D4 TO AN425-D4, CHG. Q5705-K8 TO Q5705-K1-19 & Q5705-K1-11 ADDED. 17 & 18 7/8 DIMS TO PWG.	[illegible]	[illegible]
B.	CORRECTED RIVET NOTES & REQUIRED RIVETS & WASHERS FROM DWG & R/H ADDED SCREWS & NUTS TO DWG & R/H AS PLACES OF RIVETS. (CH-1 AIRCRAFT SERIAL EFF. EO 39236)	5-12-41	[illegible]
C.	Q2SC-K1-18 & Q2SC-K1-21 ADDED TO DWG & R/H (PBY-5 EFF. EO 1812-1)	5-12-41	[illegible]

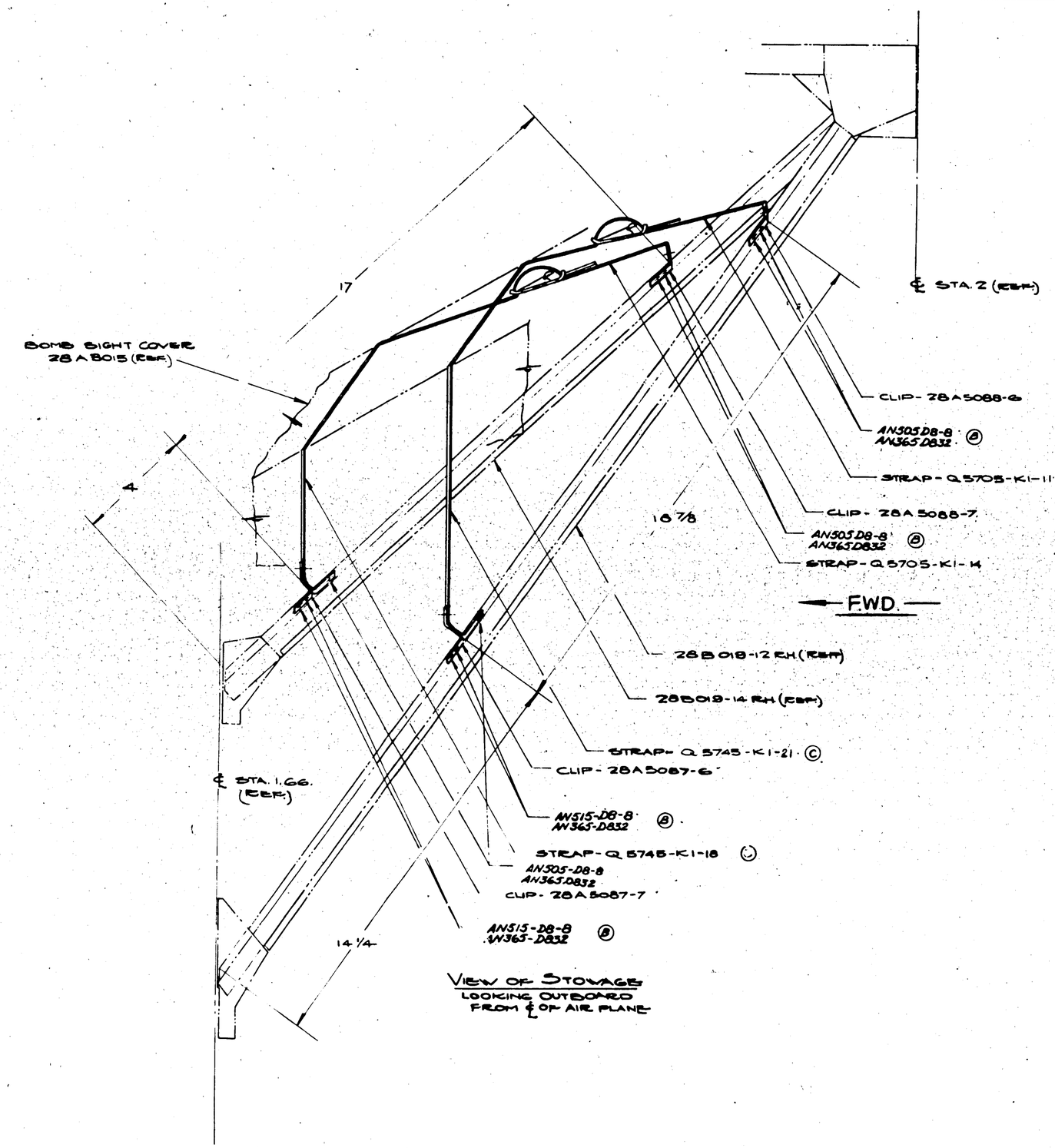

VIEW OF STOWAGE
LOOKING OUTBOARD FROM ℄ OF AIR PLANE

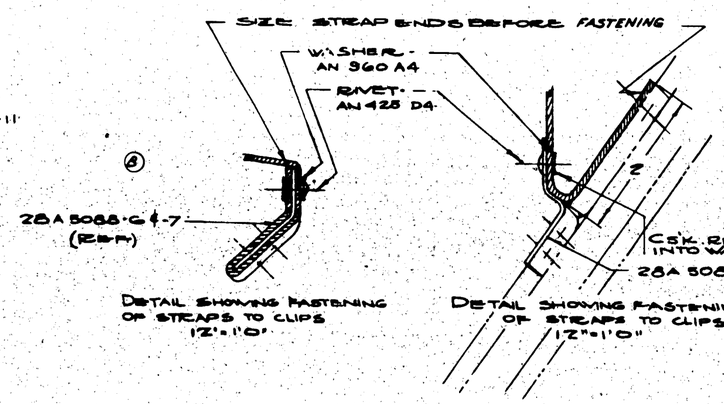

DETAIL SHOWING FASTENING OF STRAPS TO CLIPS 12"=1'0"

DETAIL SHOWING FASTENING OF STRAPS TO CLIPS 12"=1'0"

PART No	STOCK	MATERIAL	SPEC.	LH REQ.	RH REQ.	LH REQ.	RH REQ.	LH REQ.	RH REQ.	LH REQ.	RH REQ.
	PARTS LIST PER ASSY.			-0		-2		-3		-4	-5
AN365D832				10	6	1	4	8	0		
AN505D8-8											
AN515D8-8											
AN425-D4-8											
AN960A4											
(C) Q5745-K1-21											
Q5745-K1-18											
Q5705-K1-12											
Q5705-K1-14											
28A5088-7											
28A5088-6											
28A5087-7											
28A5087-6											
-0											

PBY-5 | 1 | REQUIREMENTS PER AIRPLANE

REPLACES

REPLACED BY

SCALE 6"=1'0" unless noted

STAMP PART NUMBER WHERE SHOWN

A.C. | NAVY NOMEN | HEAT TREAT | FINISH | DRAFT | CHECK | STRUCT. | DES. | APPROV. | DATE

NAME INSTALLATION-ARMT. STOWAGE BOMB SIGHT COVER

CONSOLIDATED AIRCRAFT CORP. SAN DIEGO, CALIF.

SPEC. NUMBER | SIZE G | 28A5086

LET	ALTERATION	DATE	BY
A	9/32 x 3/8 SLOT WAS #10 HOLE	5-14-42	[illegible]

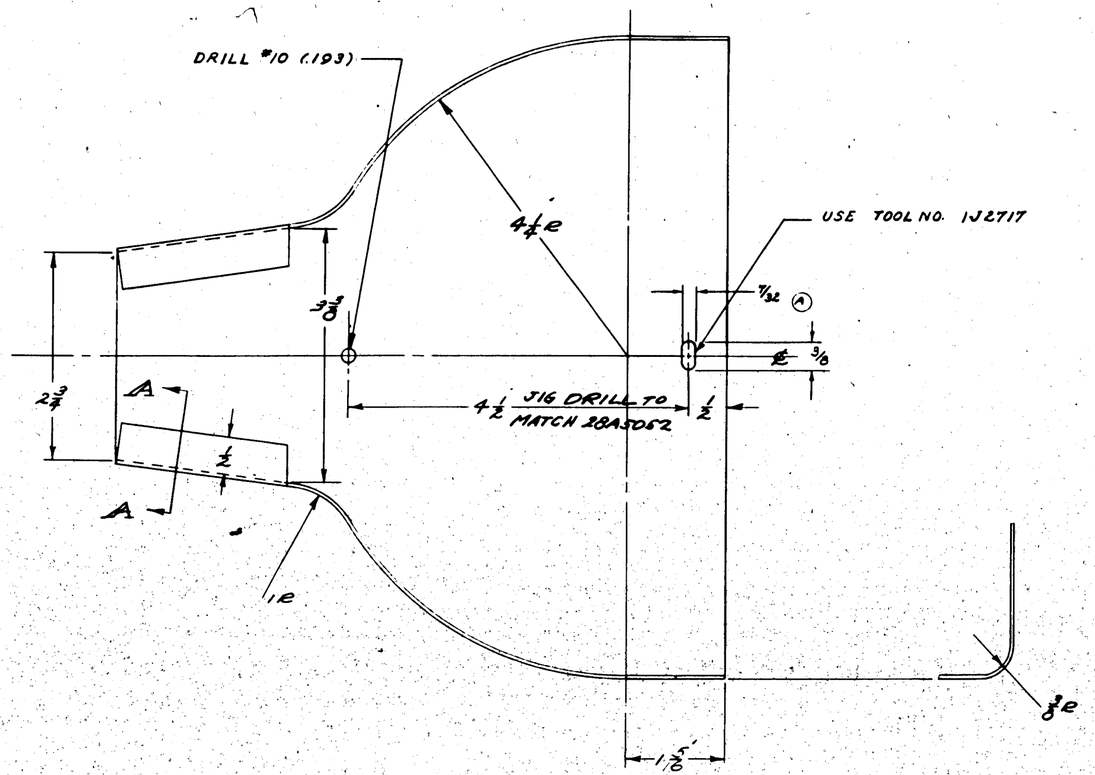

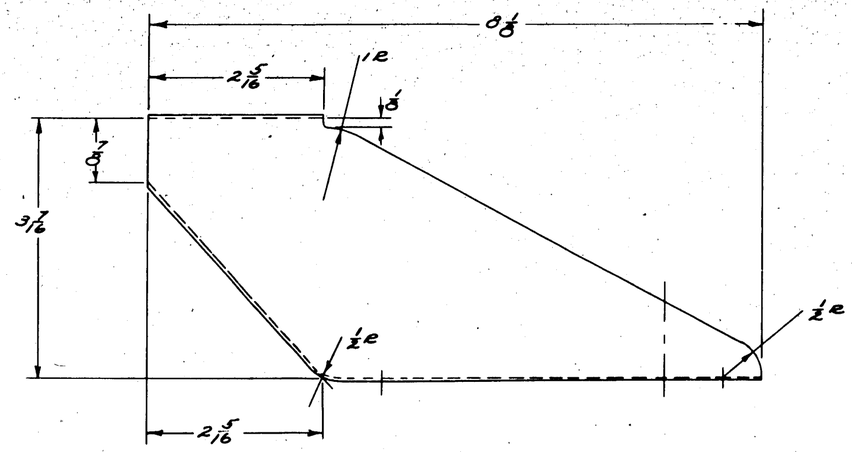

1/16 R

SECTION A-A

NOTE: THIS DWG IS AS PER NAF #68239

ASSY DASH No	MODEL	NEXT ASSY	QTY
	ASSY-5A 28A5058 1 PBY-5 28A5058 1		

REQUIREMENTS PER AIRPLANE

REPLACES

CALC WT

REPLACED BY

ACT. WT

LIST OF DRAWINGS INCLUDED IN THIS DRAWING: 2

SCALE 12" = 1'-0"

STAMP PART NUMBER WHERE SHOWN

PART No	STOCK	MATERIAL	SPEC	LH RH REQ	LH RH REQ	LH RH REQ	LH RH REQ	LH RH REQ
8	0514-11X19	ALC. SHT	47A8-A					

PARTS LIST PER ASSY. -0 -2 -3 -4 -5

A.C. NAVY NT ZAMAK HEAT TREAT — NONE FINISH

1/5/42 DRAFT — [illegible] CHECK — 1/5/42 STRUCT — [illegible] MAT — 1/14/42 APPROV — [illegible] ENG

NAME HOLDER-MK XXVIII TORP. DIRECTOR

OPP HAND — SIZE G — DWG 28A5090

CONSOLIDATED AIRCRAFT CORP: SAN DIEGO, CALIF

B.O. 162676 (GOV'T FURN.)
AN515-D6-6
AC365-D632
(-O ASS'Y ONLY)

30 (REF)

28B1600-52 (REF)

POSITION OF SEAT IN STOWAGE.

28F5863 AMM. RACK (REF.)

AN515-D8-7
AC365-D832
4 PLACES
(G)

28F3012
AN515-D6-8
AC365-D632
AN960-D6

23⅜ APPROX

(E)

8½

6

20 APPROX

22⅜ APPROX

(E)

28F1139
(SEE VIEW FOR -2 ASS'Y.)

15 APPROX

(D)

(F)

A A

28B1600-33 (REF.)

28F1137 (INSULATE WITH MARINE GLUE & FABRIC) AN442-D4 RIVET

SEAT (REF.)

28F5863-7 (REF.)

50 CAL. AMM. MAG. (REF.)

LET	ALTERATION	DATE	BY
A	ADDITIONAL WAYS AMMO. & ARMS CONT'L ASSEMBLED		
B	VERY'S PISTOL RELOCATED	2-24-41	[illegible]
C	CHANGE RIVETS TO SCREWS	4-24-41	[illegible]
C-A	AN 515-10-1 & AN 365-1032 ADDED		
D	REMOVED B.O. 11827 (1), 28A0154-5 (1), AN 442-D4 (1), AN 515-D6-8 (2), AN 515-D6-6 (2), AN 960-D6 (2) & AC 365-D632 (2) LOCATING PLUGS	10-16-41	[illegible]
E	(23⅜ APPROX & 22⅜ APPROX.) WAS 22 APPROX. & 23⅜ APPROX. RESPECTIVELY NO WT. CHANGE	2-14-42	[illegible]
F	CREATED -2 ASS'Y. WITH 28F 1139 RELOCATED FOR PBY-5 ALSO ADD'L AN WT. CHG.	12-3-42	[illegible]
G	ON PACE FOR -2 ASS'Y. ADDED 28F1137 (AN442-D4 12 PLACES); AN 515-D8-7 AC365-D832 (4 PLACES); AN 515-D6-8 AC 365-D632 (AN 960-D6; 28F1139 WAS 28F1139 (REF.) 28F3012 WAS 28F3012		

E.O. 84184
E.O. 38142
E.O. 39569
APPL. PBY-5A
CX-10

E.O. A37582

E.O. A60761

28F1139

VERY'S PISTOL
B.O. 11254
(GOV'T FURN.)
(-O ASS'Y ONLY)

28F5863-24 (REF.)

VIEW AA

28B1600-147 (REF)

28F1139

28F1137 AN442-D4 (2 PLACES)

28F3012
AN515-D6-8
AC365-D632
AN960-D6

6

20 APPROX 22⅜ APPROX.

15 APPROX

10½

28B1600-153 (REF)

AN515-D8-7
AC365-D832
(4 PLACES)

BULKH'D #6
VIEW LOOKING FWD. FOR -2 ASS'Y.

BULKH'D #6
VIEW LOOKING FORWARD
FOR -O ASS'Y.

INSTALL ON PBY-5 AIRPLANES #2818 & ON

(D)	AN515-D8-7										4	4									
	AC365-D832										4	4									
	B.O. 162676										1										
	B.O. 11254										1										
	AN960-D6										6	6									
	AN515-D6-8										6	6									
	AN515-D6-6										12										
	AN442-D4										-	-									
	AC365-D632										18	6									
	28F1018										1	1									
	28F1139										1	1									
	28F1137										2	2									
	-6																				
	PART No	STOCK	MATERIAL	SPEC.	LH REQ.	RH REQ.	LH REQ.	RH REQ.	LH REQ.	RH REQ.	LH REQ.	RH REQ.	LH REQ.	RH REQ.							
	PARTS LIST PER ASS'Y.				-0		-2		-3		-4		-5								

ASSY SERIAL OR DRAWING No.	MODEL	NEXT ASSY	Nos.
-2	PBY-5B	28F1002	1
-2	PBY-5A	28F1002	1
-2	PBY-5	28F1002	1
	PBY-5A	28F1002	
	PBY-5	28F1002	

REQUIREMENTS PER AIRPLANE

REPLACED
REPLACED BY
CALC. WT.
ACT. WT.

SCALE 3"=1'0"

STAMP PART NUMBER WHERE SHOWN

GOV'T FURN.

D 1510 ON C (NO #5464)
-2 PBY-5B 28F1002 1
-2 PBY-5A 28F1002 1
-2 PBY-5 28F1002 1
C #91876-90 ON
(#90406, #7778, #89476 INCL.)
(#90406) #25 ON
(#91876) #1-89

AC
NAVY
HEAT TREAT
FINISH
DRAFT
CHECK
STRUCT
MAT.
APPROV.
TOOL

NAME INSTALL-ARM-REAR VERY'S PISTOL & AMM. CONTAINER - SMOKE CRKNARK

CONSOLIDATED AIRCRAFT CORP. SAN DIEGO, CALIF.

OFF. HAND
SIZE G
28A5100

LET	ALTERATION	DATE	BY
A	REV. WAS .24" & .28" MAX. R. NOW .25" & .27" MAX. R. ADD'D WAS 180° NOW 180° ± 10' REMOVED: NOTE 4 REMOVED: NOTE 4 REMOVED: PARTS LIST CHANGED: MODELS ADDED.	10-14-41	CHRIS
B	REM. DET. A & CUTOUT IN LOWER PIECES OF GLASS (WT. CHG. NEGL.) E.O. A12841	4-1-44	CHRIS

LET	ALTERATION	DATE	BY

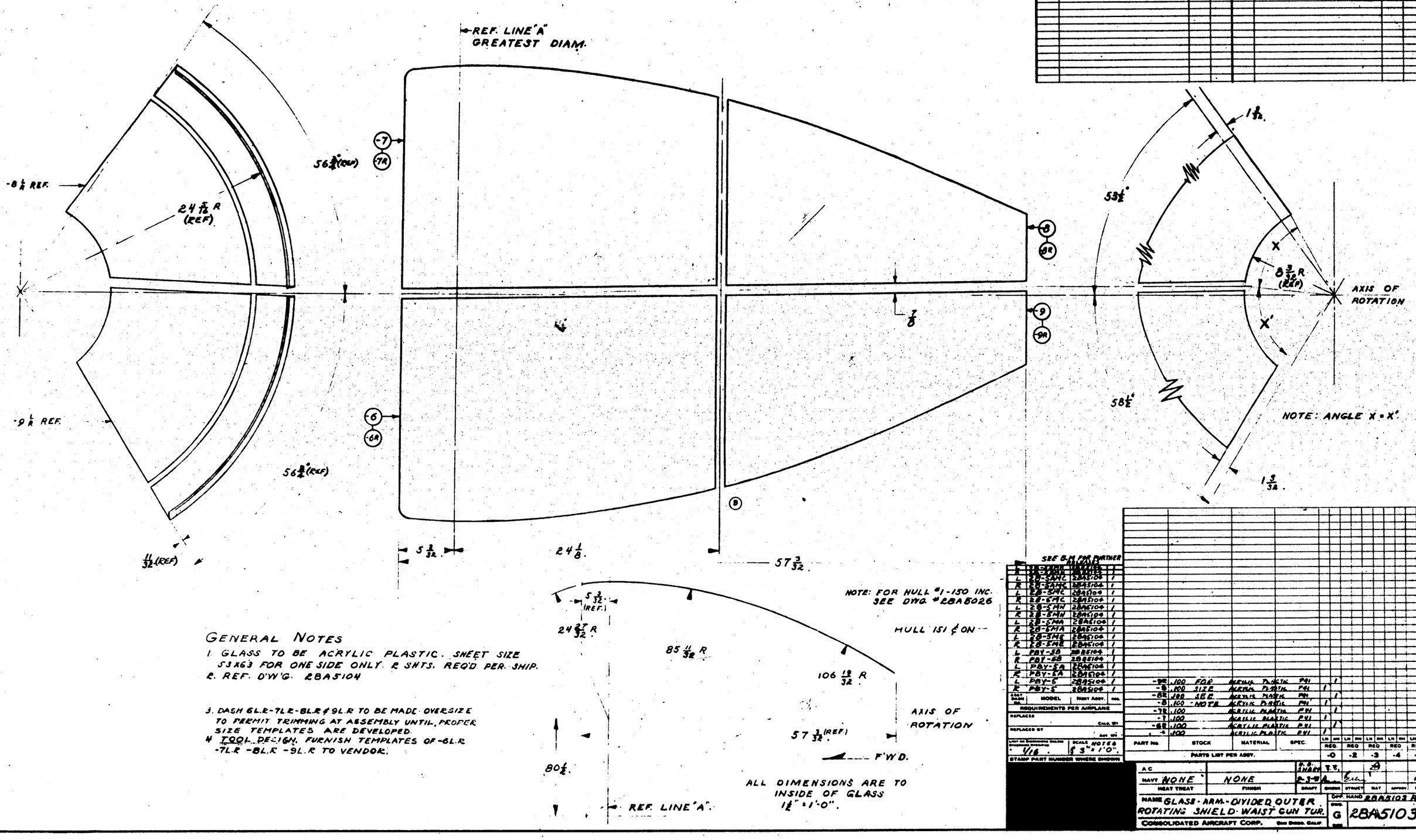

NOTE: FOR HULL #1-150 INC. SEE DWG. #28A5026

HULL ISI & ON

GENERAL NOTES

1. GLASS TO BE ACRYLIC PLASTIC. SHEET SIZE 53 X 63 FOR ONE SIDE ONLY. 2 SHTS. REQ'D PER SHIP.
2. REF. D'W'G. 28A5104

3. DASH 6L.R-7L.R-8L.R & 9L.R TO BE MADE OVERSIZE TO PERMIT TRIMMING AT ASSEMBLY UNTIL PROPER SIZE TEMPLATES ARE DEVELOPED.
4. TOOL DESIGN. FURNISH TEMPLATES OF -6L.R -7L.R -8L.R -9L.R TO VENDOR.

SEE B-M FOR FURTHER ALLOWANCE

ITEM	MODEL	PARTS ASSY. NO.	REQ.
R	28-5MA	28A5104	1
L	28-5MB	28A5104	1
R	28-5MB	28A5104	1
L	28-5MC	28A5104	1
R	28-5MC	28A5104	1
L	28-5MN	28A5104	1
R	28-5MN	28A5104	1
L	28-5MA	28A5104	1
R	28-5MA	28A5104	1
L	28-5ME	28A5104	1
R	28-5ME	28A5104	1
L	PBY-5B	28A5104	1
R	PBY-5B	28A5104	1
L	PBY-5A	28A5104	1
R	PBY-5A	28A5104	1
L	PBY-5	28A5104	1
R	PBY-5	28A5104	1

ASSY. BLOCK NO. | MODEL | PARTS ASSY. NO.

REQUIREMENTS PER AIRPLANE

REPLACES — Circ. 171

REPLACED BY — Circ. 171

LIGHT ON SUPERIMPOSED OUTLINE DRAWING: 1/16. SCALE, NOTES & DETAILS: 3"=1'0".

STAMP PART NUMBER WHERE SHOWN

PART No.	STOCK	MATERIAL	SPEC.	REQ. -0	REQ. -2	REQ. -3	REQ. -4	REQ. -5
-9R	.100 FOR SIZE SEE NOTE	ACRYLIC PLASTIC	P91	1	1			
-9	.100	ACRYLIC PLASTIC	P91	1	1			
-8R	.100	ACRYLIC PLASTIC	P91		1			
-8	.100	ACRYLIC PLASTIC	P91	1				
-7R	.100	ACRYLIC PLASTIC	P91		1			
-7	.100	ACRYLIC PLASTIC	P91	1				
-6R	.100	ACRYLIC PLASTIC	P91		1			
-6	.100	ACRYLIC PLASTIC	P91	1				

PARTS LIST PER ASSY.

A.C.		P.P. SHARP	T.T.	
NAVY NONE	NONE	2-3-42		
HEAT TREAT	FINISH	DRAFT	CHECK	STRUCT	MAT	APPROV	ENG.

NAME GLASS - ARM. - DIVIDED OUTER ROTATING SHIELD WAIST GUN TUR.

CONSOLIDATED AIRCRAFT CORP. San Diego, Calif.

CORP. HAND 28A5103 R

SIZE G | 28A5103

LET	ALTERATION	DATE	BY	LET	ALTERATION	DATE	BY
E	REPLACES ERASION OF 4-10-41	[illegible]					

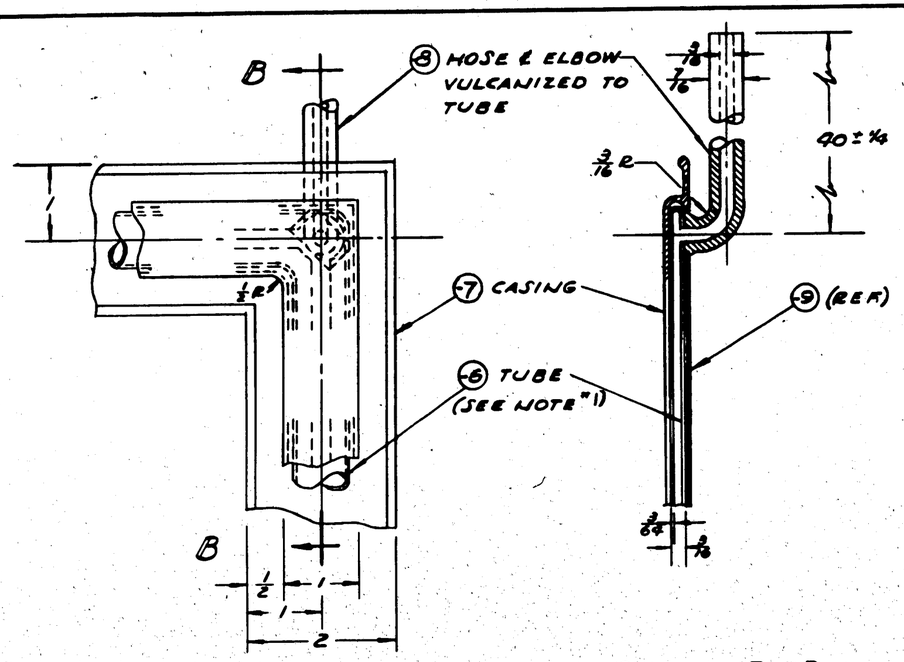

— DETAIL A —
12" = 1'-0"

— SECT. B B —
12" = 1'-0"

NOTE 1 - CONSTRUCTION OF TUBE TO BE NEOPRENE COMPOUND GN-55, MADE FROM 5/8 x 3/64 WALL TUBING VULCANIZED TO FORM CIRCULAR INNER TUBE. ADD 1/64 TO WALL THICKNESS AT POINT OF ELBOW VULCANIZING & FOR 6" EACH SIDE. 30 TO 40 SHORE HARDNESS.

NOTE 2 - CONSTRUCTION OF CASING TO BE NEOPRENE COMPOUND "GN-55 & 55 TO 60 SHORE HARDNESS.

NOTE 3 - CONSTRUCTION OF SUPPLY HOSE & ELBOW TO BE NEOPRENE 70 TO 80 SHORE HARDNESS. EXTENSION TUBING VULCANIZED TO MOLDED ELBOW.

NOTE 4 - CONSTRUCTION OF SEAL STRIP TO BE .355 SHEETING. RUBBER FRICTION & SKIM COATED ON ONE SIDE & VULCANIZED TO CASING.

GASKET & SUPPLY HOSE TO WITHSTAND 25"(MIN.) AIR PRESSURE & TO BE TESTED BY VENDOR FOR LEAKS BY WATER IMMERSION UNDER MIN. PRESSURE. PIN HOLE LEAKS IN TUBE, CASING AND/OR SUPPLY HOSE NOT ACCEPTABLE BY PURCHASER.

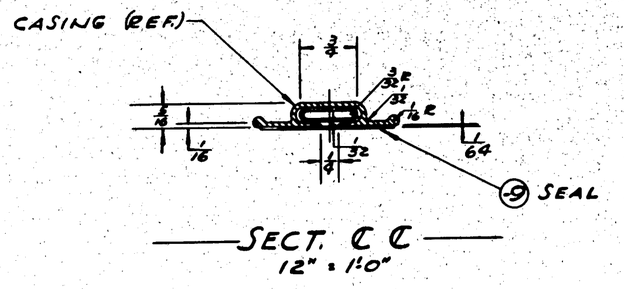

— SECT. C C —
12" = 1'-0"

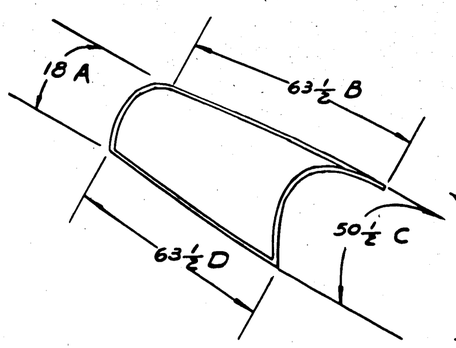

VIEW SHOWING OUTLINE SHAPE OF GASKET AFTER INST'L. (NO SCALE)

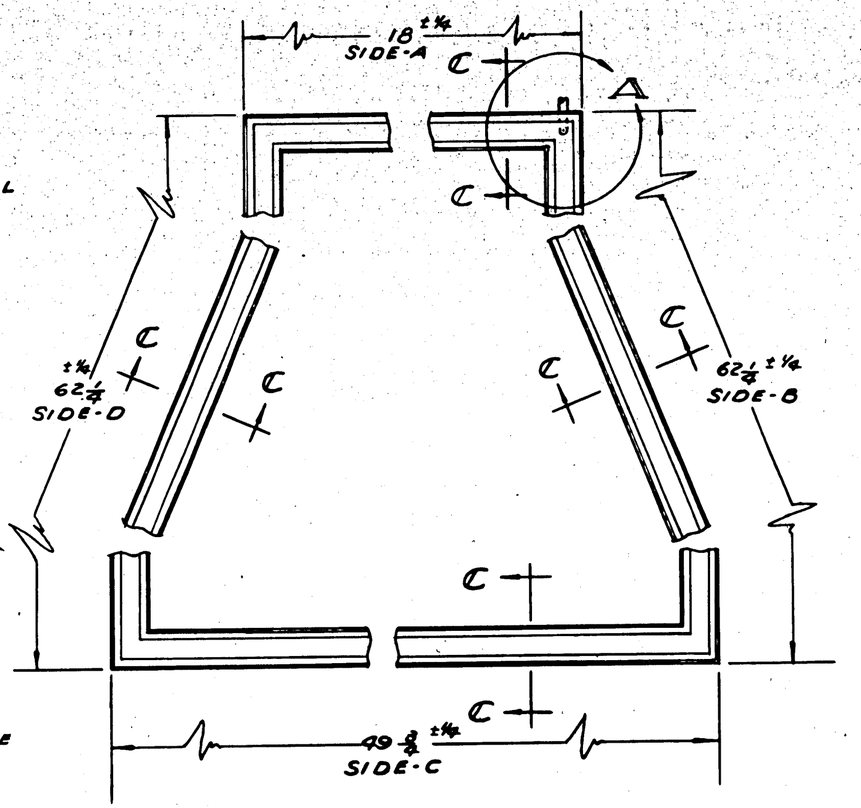

PURCHASE TO DWG.

ASSY DASH NO	MODEL	NEXT ASSY	REQ.
	28-SAHW	28A5041	2
	28A1-S	28A5041	2
	28-SAHR	28A5041	2
	28-SHR		2
	28-SHW		2
	28-SHA		2
	28-SHL		2
	28A-SA		2
	28A-SB	28A5041	2

REQUIREMENTS PER AIRPLANE

REPLACES 28A5106 OF 4-10-41 — .55 LB CALC WT

REPLACED BY — ACT WT

LIST OF SUBASSEMBLIES INCLUDED IN THIS ASSEMBLY: 7 92 E

SCALE 6" = 1'-0 & NOTED

STAMP PART NUMBER WHERE SHOWN

PART No	STOCK	MATERIAL	SPEC	LH REQ.	RH REQ	HELIX	SUB ASSY	LH REQ	RH REQ
-0	SEE NOTE #4								
-2	SEE NOTE #3								
-3	SEE NOTE #2								
-4	SEE NOTE #1								

PARTS LIST PER ASSY. -0 -2 -3 -4

A.C. — NAVY NONE — HEAT TREAT — NONE — FINISH — 5-25-42 — DRAFT — CHECK — STRUCT — MAT — APPROV — ENG

NAME PNEUMATIC GASKET-OUTER ROTATING SHIELD-WAIST GUN

CONSOLIDATED AIRCRAFT CORP. SAN DIEGO, CALIF.

OPP HAND — DWG G — DWG 28A5106

R

LET	ALTERATION	DATE	BY
A.	ADDED Q4303-A04 (4), NOTES "CSK. THIS SIDE" & "#10 DRILL ---28A5159(REF)" NO WT. CHG.		
B	IN DIM ADDED -9L TO RH. ASSY & -9R TO L.H. ASSY (1 REQ. EA.) NO WT. CHG.	1-13-42	[illegible]
C	IN VIEW A-A ADDED 1/8 DIM & 1 DIM. WT. CHG NEG.	[illegible]	LINN

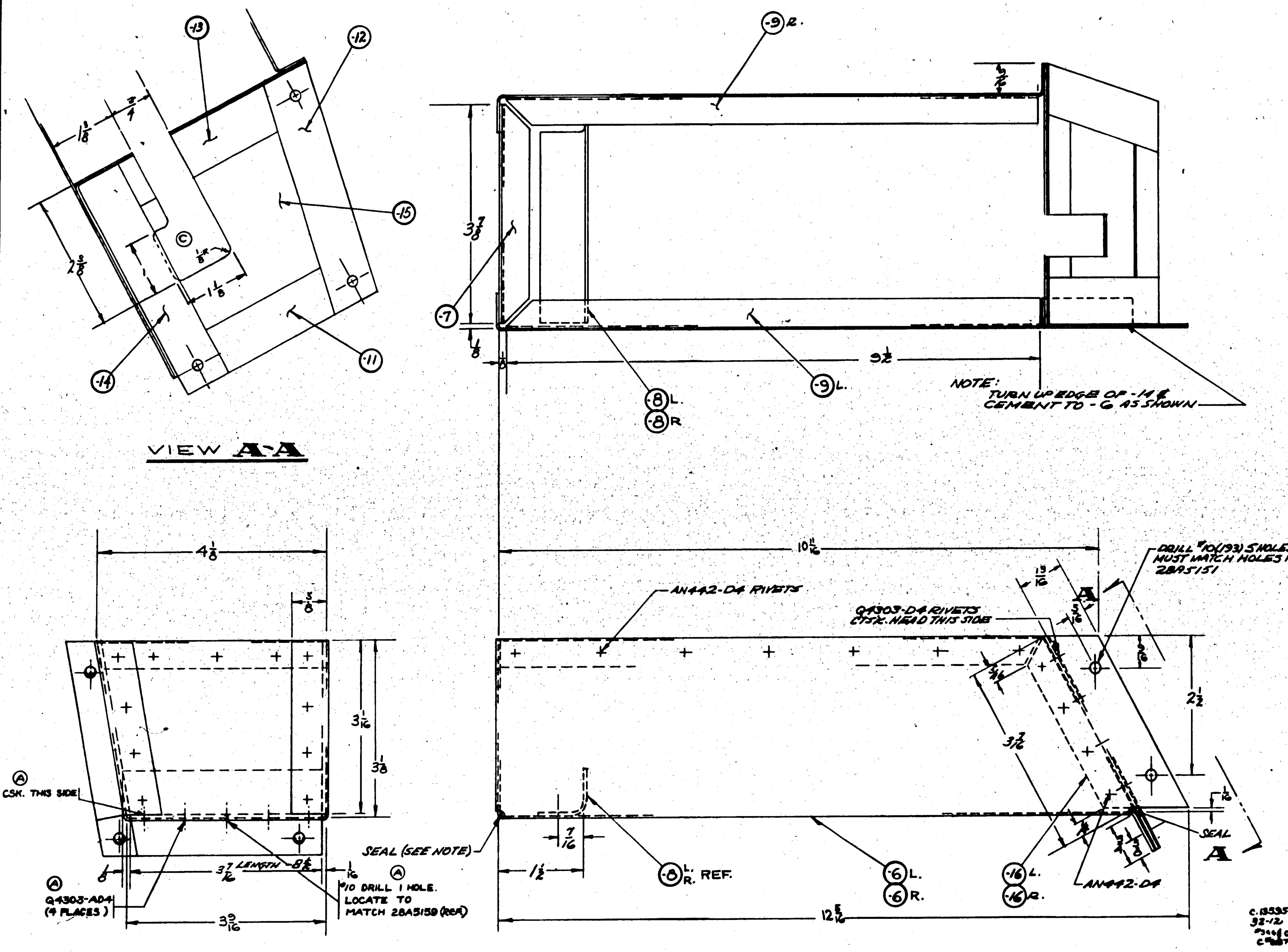

NOTES:
(1) MAKE ALL JOINTS & CORNERS WITH BLACK BOSTIC.
(2) CEMENT -11, -12, -13 & -14 TO -15 (PLATE), FLUSH OUTSIDE EDGES

ASSY DASH NO.	MODEL	NEXT ASSY	REQ.
-R	PBY-5A	28A5150	1
-L	PBY-5A	28A5150	1
-0R	PBY-5	28A4750	1
-0L	PBY-5	28A4750	1

REQUIREMENTS PER AIRPLANE

C.13535 32-12

REPLACES — .78 CALC. WT.

REPLACED BY — ACT. WT.

LIMITS ON DIMENSIONS UNLESS OTHERWISE SPECIFIED: ± 1/32 — SCALE: 12" = 1'-0"

STAMP PART NUMBER WHERE SHOWN

PART No	STOCK	MATERIAL	SPEC	REQ. -0 LH	RH
Q4303-A04					
Q4303-D4					
AN442-D4					
-16R	Y2-A17 x 3 5/8				1
-16L	Y2-A17 x 3 5/8			1	
-15	.040 x 4 1/4 x 3 1/2	ALC. SHT.	47AB-T	1	1
-14	1/16 x 7/8 x 4 1/2	[illegible]		1	1
-13	1/16 x 7/8 x 3 7/8			1	1
-12	1/16 x 1/2 x 4 1/2			1	1
-11	1/16 x 7/8 x 2 3/8	[illegible]		1	1
-9R	Y2-A17 x 9 3/4			1	1
-9L	Y2-A17 x 9 3/4			1	1
-8R	Y2-A26 T x 3 3/4				1
-8L	Y2-A26 T x 3 3/4			1	
-7	Y2-A17 x 4			1	1
-6R	.040 x 10 1/2 x 16	ALC. SHT.	47AB-T		1
-6L	.040 x 10 1/2 x 16	ALC. SHT.	47AB-T	1	

PARTS LIST PER ASSY.

A C — NAVY None — ZP 6P — 8/24/41
HEAT TREAT — FINISH — DRAFT — CHECK — STRESS — MAT. — APPROV. — ENG.

NAME FAIRING ARMT. PULLEY BRACKET

OPP. HAND 28A5160-R

G — DWG 28A5160

CONSOLIDATED AIRCRAFT CORP. SAN DIEGO CALIF.

R

LET	ALTERATION	DATE	BY	LET	ALTERATION	DATE	BY

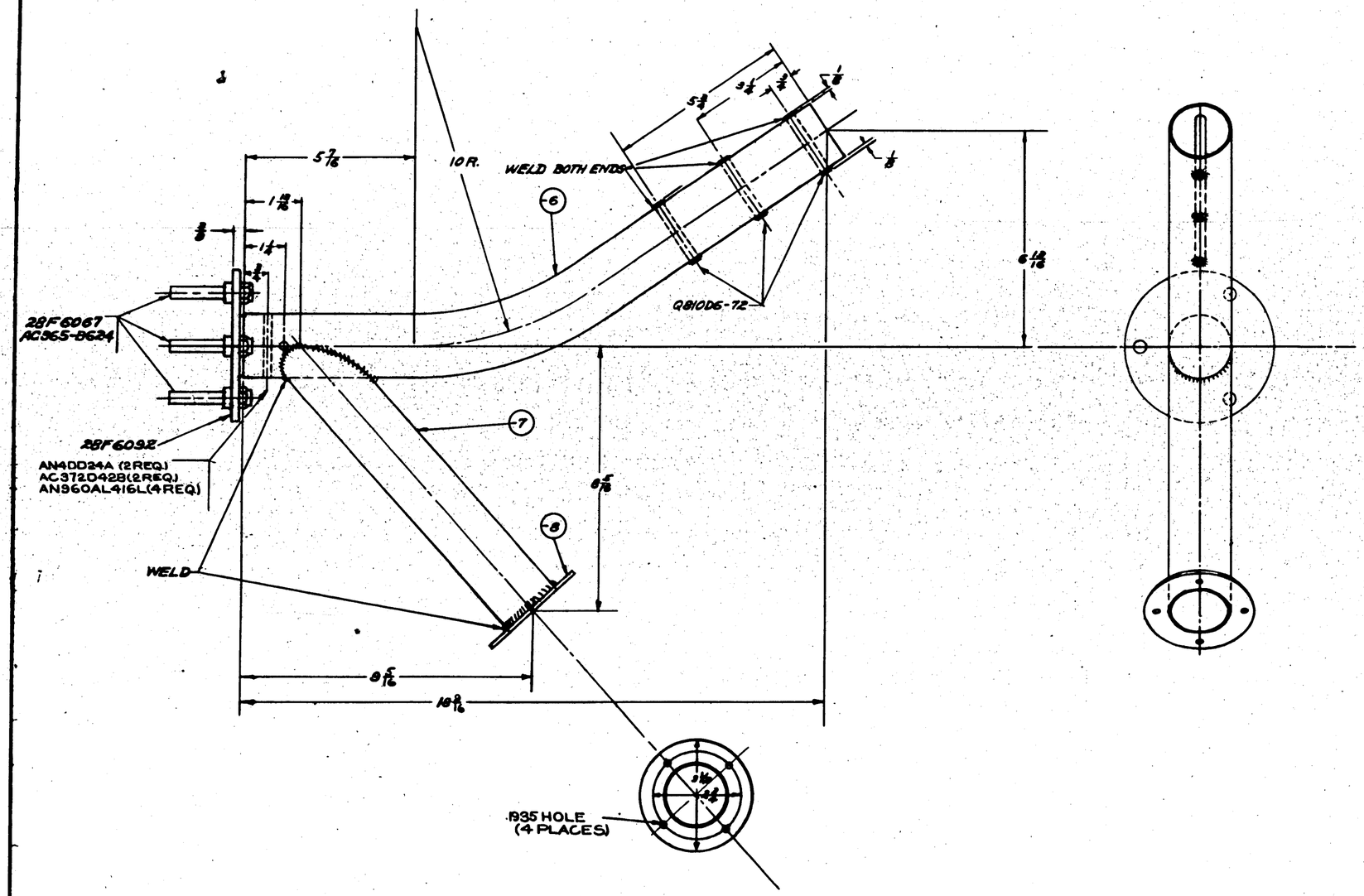

PART NO	STOCK	MATERIAL	SPEC.	LH REQ	RH REQ	LH REQ	RH REQ	LH REQ	RH REQ
PARTS LIST FOR ASSY.				-0		-2		-3	-4
		-6	1/8 x 3 1/2 x 3 1/2	AL ALLOY 4130 II-A					
		-7	1 OD x .065 x 11 7/16	AL ALLOY TUBING 24ST					
		-8	1 OD x .065 x 4 1/2	AL ALLOY TUBING 24ST					
28F6092								1	1
28F6067								1	1
QB10D6-72								1	1
AN960AL416L								4	4
AC372D428								2	2
AN4DD24A								2	2
AC365-8624								1	1

PBY-5 | 28A5115 /

DEPARTMENTS FOR ARTICLES

REPLACED — $ [illegible]

REPLACED BY — Acft. No.

SCALE 6" = 1'-0"

CONTRACT PART NUMBER | CONTRACT NO.

A.C.

NAVY NONE — HEAT TREAT

Z-P-GP — FINISH

NAME ASSEMBLY-SUPPORT-ARM BOMBSIGHT MOUNT

CONSOLIDATED AIRCRAFT CORP. San Diego, Calif.

DRAWN 1-1-43 | TRACED | CHECKED | MATL. | APPROVED

DWG. NUMBER

SIZE C — DWG. NO. 28A5176

MCR 726-1

APPROVED FOR TOOLING BY R.B. Humphreys 1-1-43

R4

MAT	DESCRIPTION	QUOTE	QTY	MAT	DESCRIPTION	QUOTE	QTY

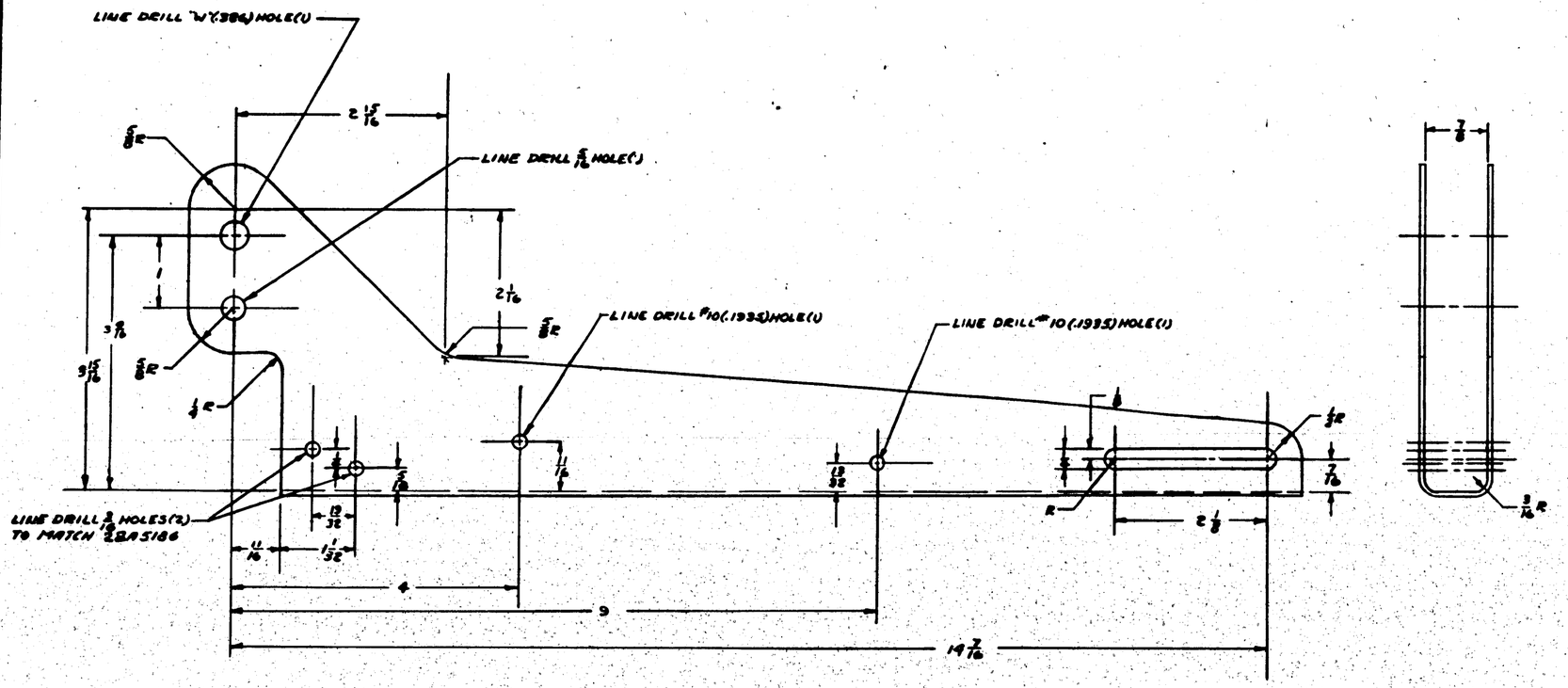

MCR 126-8

APPROVED FOR TOOLING BY R.B.HUMPHREYS 1-2-43

PART NO	SPEC.	MATERIAL	SPEC.	LH REQ.	RH REQ.	LH REQ.	RH REQ.	LH REQ.	RH REQ.	LH REQ.	RH REQ.								
PARTS LIST PER ASSY.				-0	-2	-3	-4	-5											

A5				ASSEMBLY	LINK	LH													
SHOT PEENE	SPEC			PLATE		1													
HEAT TREAT		FINISH		DRAFT	CHECK	STRESS	MAT	APPROVAL	DATE										

TRIGGER ARM-ARMT-ADAPTER-BOMB REL. RACK

CONSOLIDATED AIRCRAFT CORP. Fort Worth, Texas

DWG NO. 28A5185

SIZE A

SCALE 15"=1'0"

PBY-5 28A5183

MODEL | ITEM ASSY. NO.

REQUIREMENTS FOR ASSEMBLY

RELEASED

RELEASED BY

ENGR. NO.

DOC. NO.

R

MAT	SPECIFICATION	SIZE	QTY

MAT	SPECIFICATION	SIZE	QTY
1	ALUMINUM ALLOY PLATE, ALCLAD 24S-T, AN-A-13	3/16	

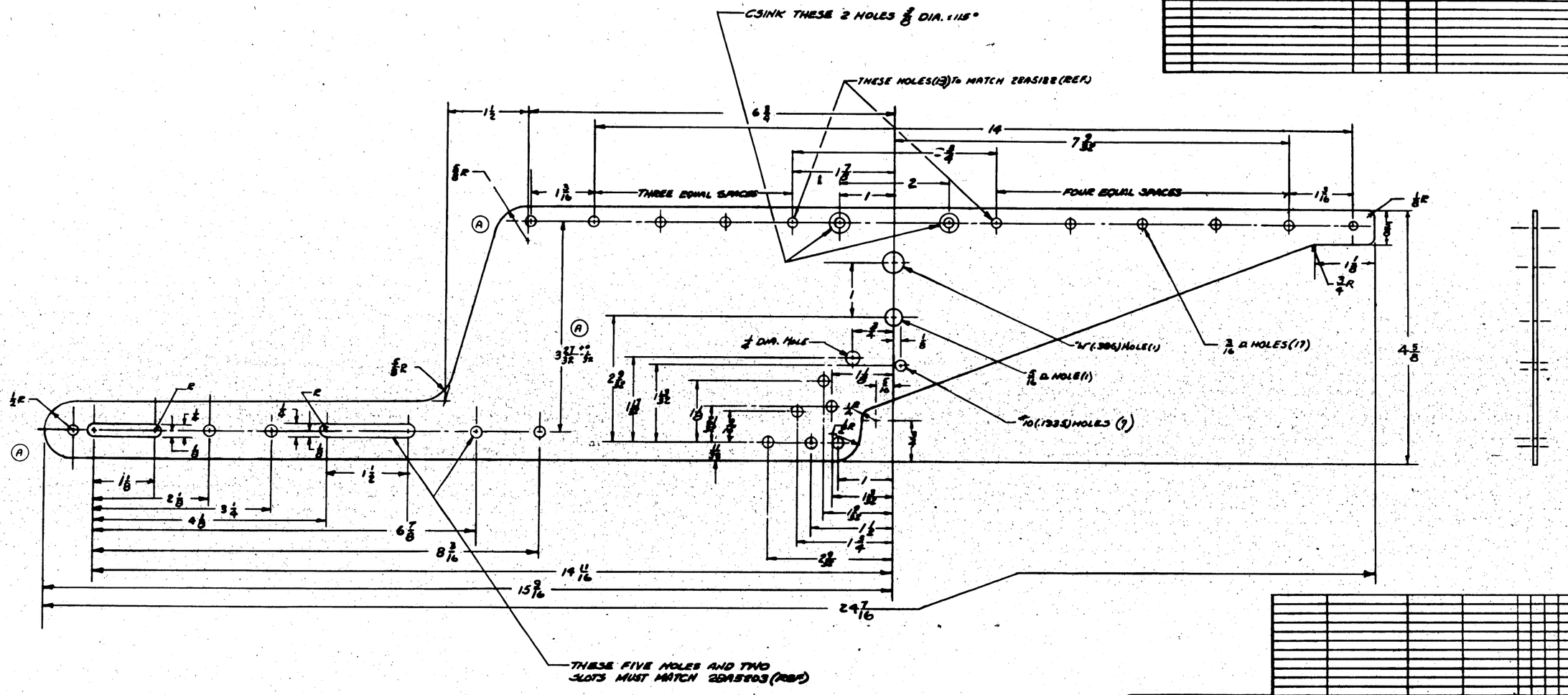

M.C.R. # 126-2

-R	PBY-5	28A5183	B
-L	PBY-5	28A5183	D
PART NO.	MODEL	NEXT ASSY.	USED

REQUIREMENTS PER AIRPLANE

REPLACES	.65 SPEC. NO.
REPLACED BY	ADD. NO.
SCALE	12"-1'0"

4 130-4 X 24 X 4 ALCLAD 24 AA-T

PART NO.	STOCK	MATERIAL	SPEC.	LH REQ.	RH REQ.	LH REQ.	RH REQ.	LH REQ.	RH REQ.	LH REQ.	RH REQ.
PARTS LIST PER ASSY.				-0	-2	-3	-4	-5			

A.C. NEXT NONE	Z-P-GP	LINES		
NEXT TODAY	FINISH	DRAFT	CHECK	STRESS

NAME WEB-ARMT-ADAPTER-BOMB RELEASE RACK

CONSOLIDATED AIRCRAFT CORP. SAN DIEGO, CALIF.

SPEC NUMBER 28AA188-K

SIZE G

DWG NO. 28A5188

REV R

APPROVED FOR TOOLING BY

R.O. Hennessy 1-2-43

LTR	ALTERATION	DATE	BY
A	CHG. SIZE & LOCATION OF "SLOTS" AS SHOWN		

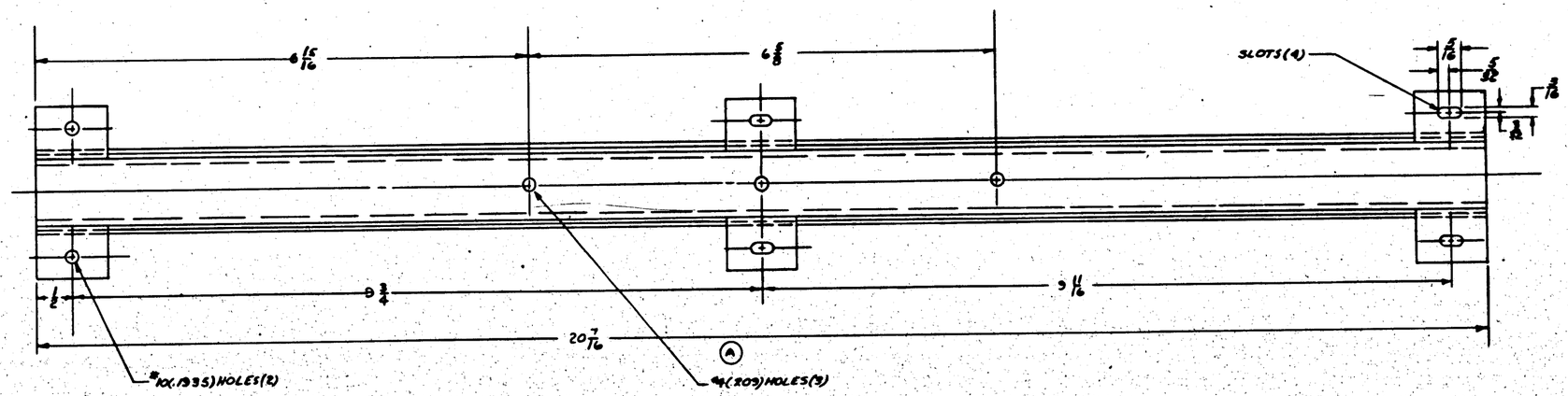

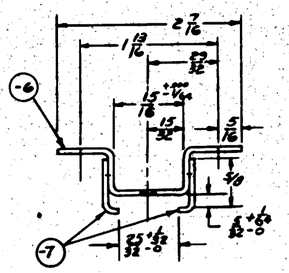

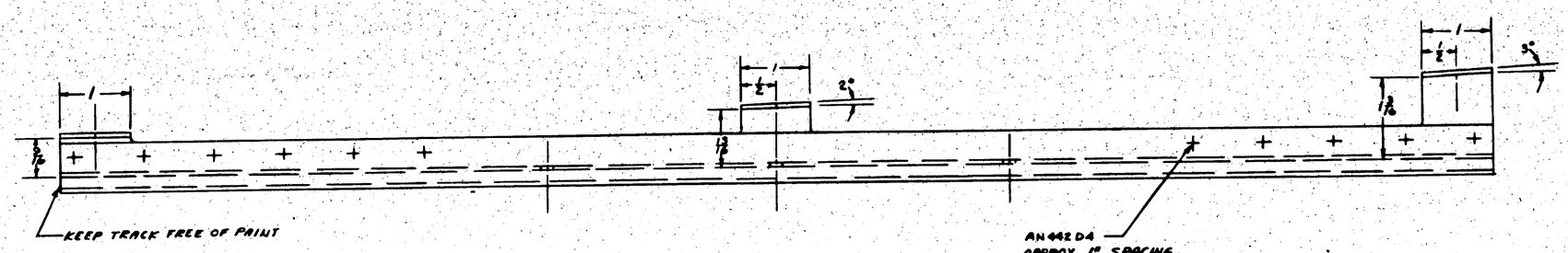

NOTE :-
BEND RADII FOR -7 TO BE 1/16

NCR 726-2

APPROVED FOR TOOLING BY
[signature] 1-2-43

AN442D4

ASSY. DWG. NO.	MODEL	NEXT ASSY	QTY.
	PBY-5	PBY5B2B	6

REQUIREMENTS FOR AIRPLANE

REPLACES	.63# EMPTY WT.
REPLACED BY	ASY. WT.

Latest Ltr Authorized Vendor Drawing Drawing: -132 | SCALE 10"=1'0"

STAMP PART NUMBER WHERE SHOWN

PARTS LIST PER ASSY.

PART NO.	STOCK	MATERIAL	SPEC.	LTR	LTR	LTR	LTR	LTR	LTR	LTR
				REQ.	REQ.	REQ.	REQ.	REQ.	REQ.	REQ.
-7	.063 x 7/8 x 2 3/16	ALCLAD	4278-T	1						
-6	.063 x 5/16 x 2 7/16	ALCLAD	4278-T		1					
				-0	-2	-3	-4	-5	-6	-7

A C
NAVY SPARE
HEAT TREAT
RP-6P
PINION

	LTR	DATE	DRAFT	CHECK	STRUCT	MAT	DESIGN
	A	2-2-43					

NAME TRACK ASSY-ARM'T. ADAPTER-BOMB ARMING-AFT
CONSOLIDATED AIRCRAFT CORP. San Diego, Calif.

ORD. HAND | DWG. G | 28A5193

R

LTR	DESCRIPTION	DATE	BY	LTR	DESCRIPTION	CHKD	QT.
				A	[illegible]		

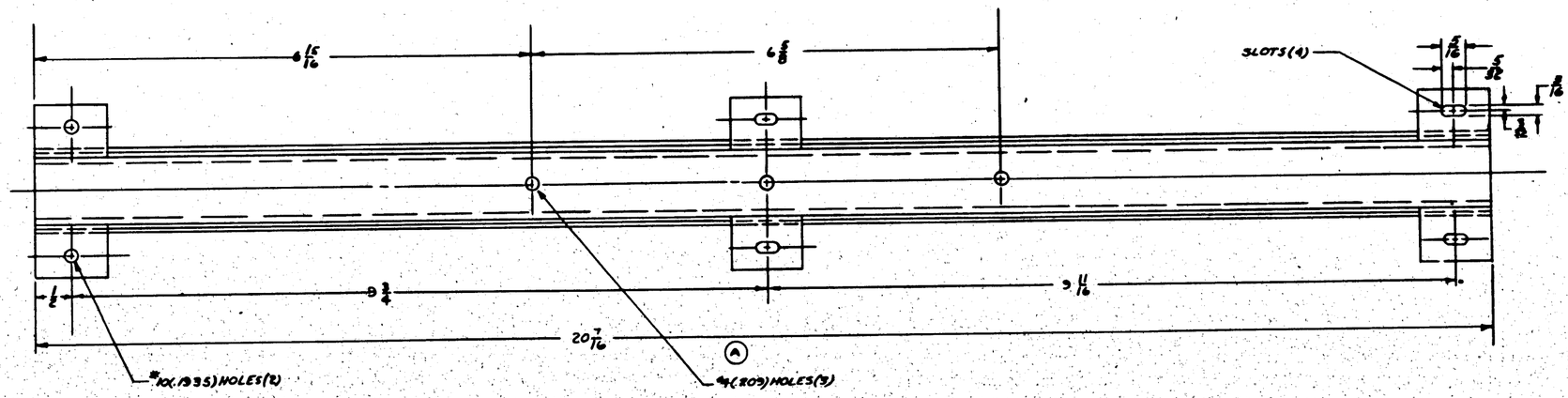

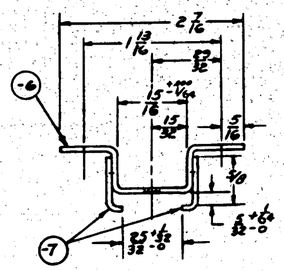

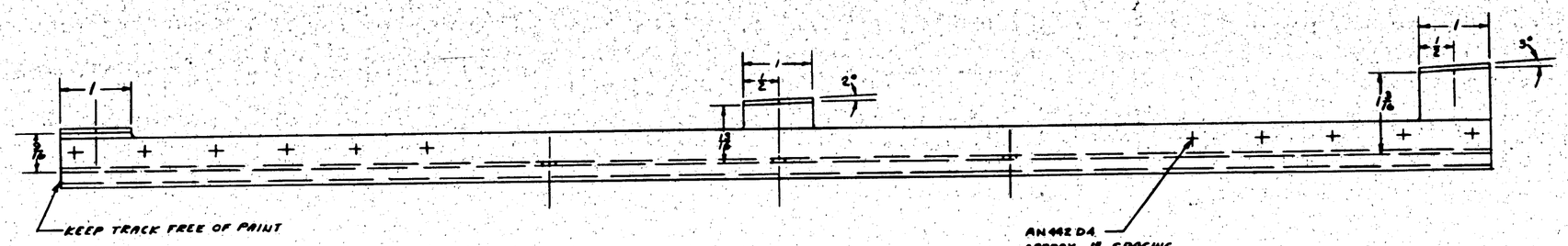

NOTE :-
BEND RADII FOR -7 TO BE 1/16

NCR #726-2

APPROVED FOR TOOLING BY
[illegible] 1-3-44

AN 442 D4

PART NO.	STOCK	MATERIAL	SPEC.	REQ. -0	REQ. -2	REQ. -3	REQ. -4
-7	.064 x 7/16 x 20 7/16	ALCLAD	4788-T	1			
-6	.064 x 5 1/4 x 20 7/16	ALCLAD	4788-T		1		
-3	.064 x 5 1/4 x 20 7/16	ALCLAD	4788-T			1	
-4	.064 x 5 1/4 x 20 7/16	ALCLAD	4788-T				1

PARTS LIST PER ASSY.

ASSY. DASH NO.	MODEL	NEXT ASSY.	QTY.
	PBY-5	28A5202	4

REQUIREMENTS PER AIRPLANE

DISPLACED — .69# Disp. Wt.

DISPLACED BY — Ass't. Wt.

Lines on Engineering Drawings are Inches — SCALE 12"=1'0"

• 132

STAMP PART NUMBER WHERE SHOWN

A C
NAVY SPECIFIC
HEAT TREAT
Zn-CP
FINISH

DRAFT 2-28-44 — LINES [illegible] — CHKD — APPROVED — MAT — APPROVED

NAME TRACK ASSY-ARM'T-ADAPTER-BOMB ARMING-AFT

CONSOLIDATED AIRCRAFT CORP. San Diego, Calif.

ORD. G

OPP. HAND

DWG. 28A5193

R

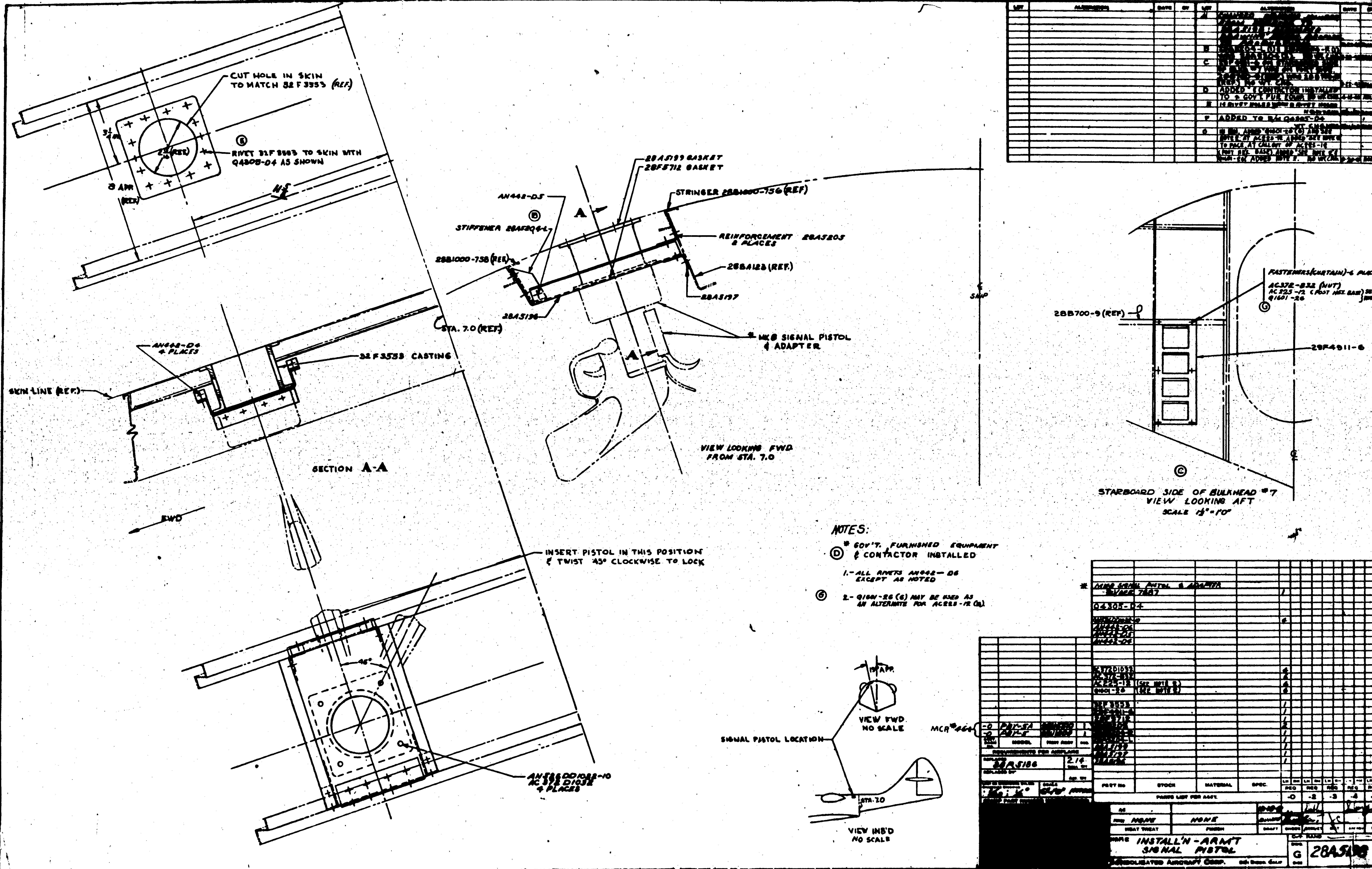

CUT HOLE IN SKIN TO MATCH 32 F 3553 (REF.)
RIVET 32F 3553 TO SKIN WITH Q4305-04 AS SHOWN
8 APR (REF)
SKIN LINE (REF.)
AN442-D4 4 PLACES
32 F 3553 CASTING
SECTION A-A
FWD
INSERT PISTOL IN THIS POSITION & TWIST 45° CLOCKWISE TO LOCK
45°
AN526DD1032-10 AC 372 D1032 4 PLACES
28A5199 GASKET
28F5712 GASKET
AN442-D5
STIFFENER 28A5204-L
28B1000-758 (REF.)
STRINGER 28B1000-756 (REF)
REINFORCEMENT 28A5205 2 PLACES
28BA123 (REF.)
28A5197
28A5196
STA. 7.0 (REF.)
* MK 8 SIGNAL PISTOL & ADAPTER
VIEW LOOKING FWD FROM STA. 7.0
℄ SHIP
FASTENERS (CURTAIN)-6 PLACES
AC372-832 (NUT)
AC 225-12 (POST HEX. BASE)
Q1601-26
SEE NOTE 2
28B700-9 (REF)
28F4911-6
STARBOARD SIDE OF BULKHEAD #7
VIEW LOOKING AFT
SCALE 1½"=1'0"
NOTES:
* GOV'T. FURNISHED EQUIPMENT & CONTACTOR INSTALLED
1.- ALL RIVETS AN442-D6 EXCEPT AS NOTED
2.- Q1601-26 (G) MAY BE USED AS AN ALTERNATE FOR AC225-12 (G).
SIGNAL PISTOL LOCATION
VIEW FWD. NO SCALE
VIEW INB'D NO SCALE
STA. 7.0
MCR #464
-0 PBY-5A
-2 PBY-5
28A5186
2.14
Q4305-D4
AC372D1032
AC372-832
AC225-12 (SEE NOTE 2)
Q1601-26 (SEE NOTE 2)
32F3553
PART No
STOCK
MATERIAL
SPEC.
PARTS LIST FOR ASSY.
NONE
NONE
HEAT TREAT
FINISH
INSTALL'N - ARM'T SIGNAL PISTOL
G
28A5198
CONSOLIDATED AIRCRAFT CORP.

LET	ALTERATION	DATE	BY	LET	ALTERATION	DATE	BY

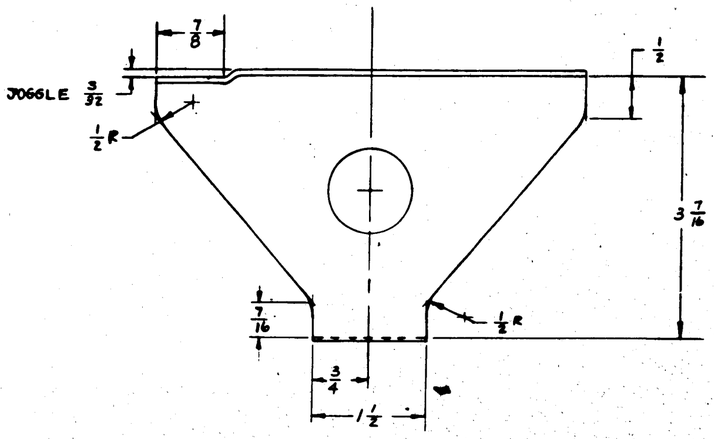

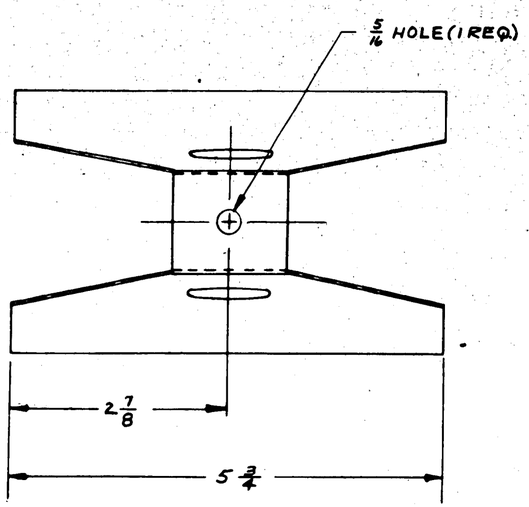

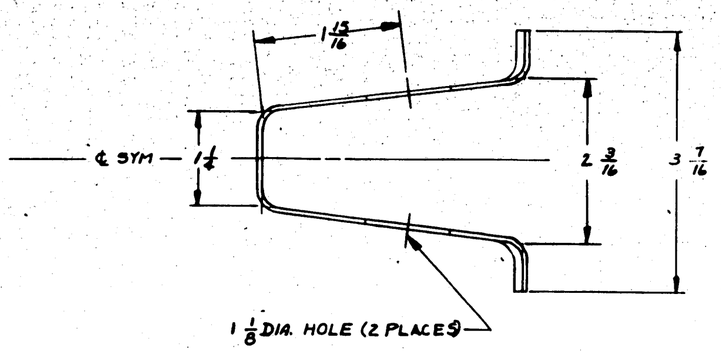

CONT #NOS (5) 464 (MCR 200C & ON)
CONT #31876 (MCR 200C & ON)

ASSY SHOWN ON DRG. NO.	MODEL	NEXT ASSY.	QTY.
	PBY-5A	28A5232	2
	PBY-5	28A5232	2

REQUIREMENTS PER AIRPLANE

REPLACES	QTY.
28F6826 4/4	2.0
REPLACED BY	ASY. QTY.

LIST OR ENGINEERING ORDER DRAWING NO.	SCALE
132	12" / 10"

STAMP PART NUMBER WHERE SHOWN

PART NO	STOCK	MATERIAL	SPEC.	LH REQ.	RH REQ.	LH REQ.	RH REQ.	LH REQ.	RH REQ.	LH REQ.	RH REQ.
PARTS LIST PER ASSY.	0.81 x 3 1/2	ALCLAD	QQ-A-362	-0		-2		-3		-4	

APPROVED FOR TOOLING BY
Gosline 6-19-43

A C			LINN			
NAVY NONE	Z-P-GP		DRAFT	DESIGN	STRESS	MAT.	APPROV.
HEAT TREAT	FINISH					

NAME BRACKET-MK 51 OUTBOARD BOMB RELEASE PULLEY

CONSOLIDATED AIRCRAFT CORP. San Diego, Calif.

SIZE G | DWG. NO. 28A5224

OP. NUMB

R 28A5224

LET	ALTERATION	DATE	BY	LET	ALTERATION	DATE	BY

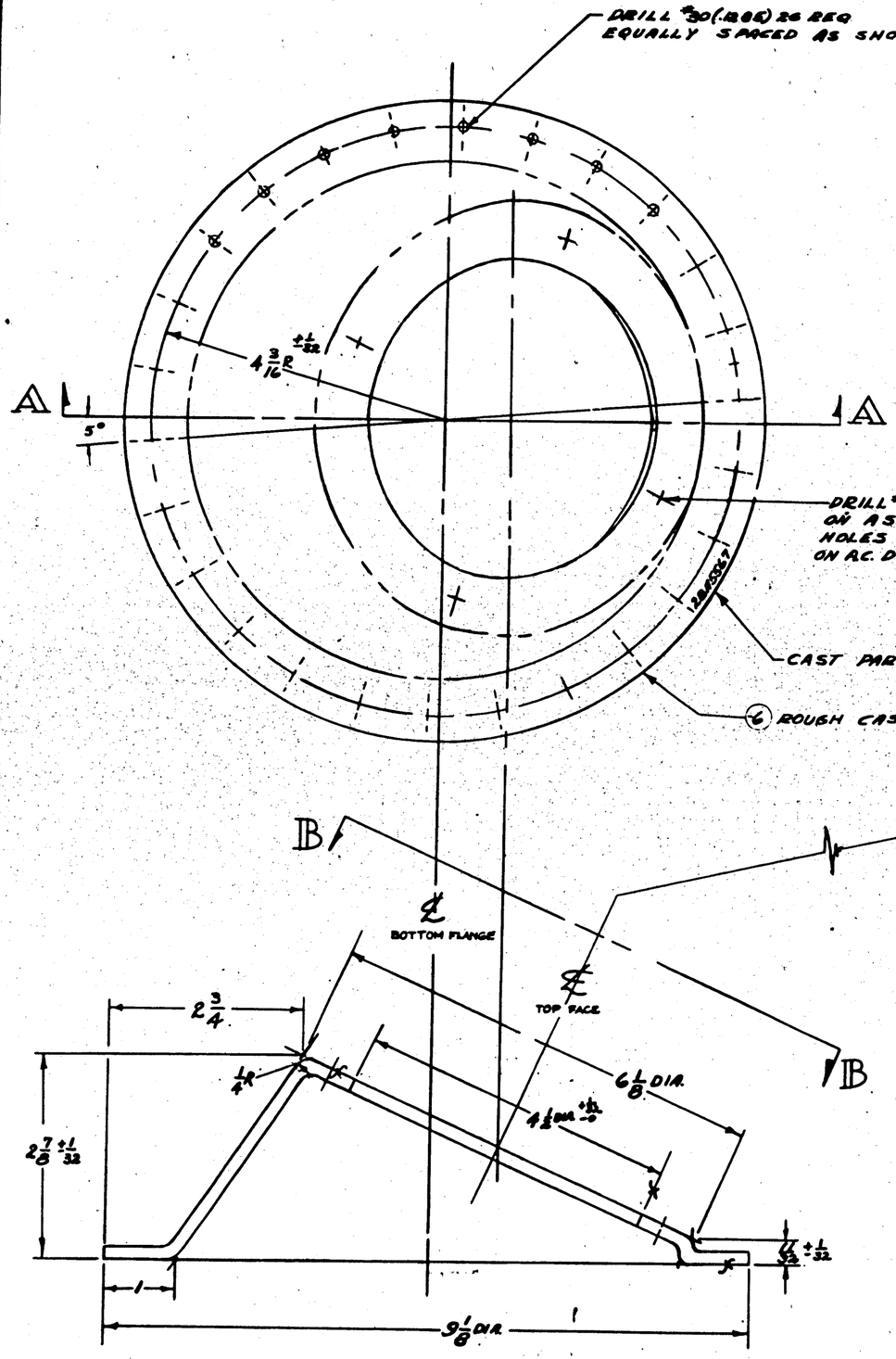

VIEW A-A

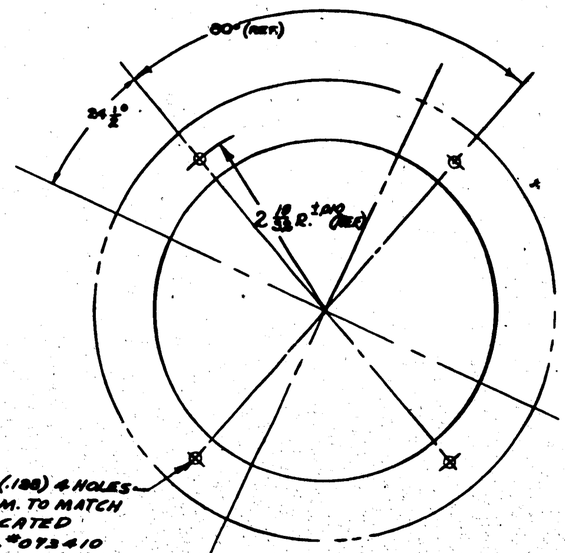

VIEW B-B

NOTE
1) ALL WALL THICKNESS 3/16 ±1/32
2) ALL FILLET RADII 3/16 UNLESS OTHERWISE SPECIFIED

3 SHIPS - SER. #2486, 2487, 2488

CONTRACT ORDER 7043C
CHANGE No. Q-1

PBY-5A SERIES 1

PART NO	STOCK	MATERIAL	SPEC	LH REQ. -0	RH REQ. -2	LH REQ. -3	RH REQ. -4	LH REQ. -5	RH REQ.
	PARTS LIST PER ASSY.								

M. ALLOW. STK. 1/8 STK

A.C.			
NAVY	Z-P-2AP		
HEAT TREAT	FINISH		

NAME BASE-ARMAMEMT CAMERA VIEW FNDER

CONSOLIDATED AIRCRAFT CORP. San Diego, Calif.

SIZE	DWG. NO.
G	2BA5567

LET	ALTERATION	DATE	BY

LET	ALTERATION
A	[illegible]
	PARTS AND PARTS ON FACE ADDED [illegible]
	NOTE. NO BY CHG
P	ON FACE OF DWG REMARKS [illegible]
	NORMALIZE - T & - B BEFORE
	WELDING" TO HEAT TREAT PARTS
	ADDED "NORMALIZE" NO WT CHG

INTERFORMED
STYLE 2 SWAGED CHG NO 10
STYLE 3 SWAGED CHG NO 7

(8) END PLATE

8½

A

32°

2R

-8 REF

1/16

-8 (REF.)
WELD CLOSED

DETAIL A

-8REF

(6R)
(6) TUBE

20½

1⅛ +0 -.06

40°

WELD

-6 REF

VIEW A-A
SCALE - 12" = 1'-0"

-816-8-36 SPACER
DRILL V (377)

(7) END PLATE

5E

26°

A

A

5⅛

2R

4⅛

4"

-7 REF

DRILL #32 (.089) ONE HOLE WITHIN ¼ INCH OF EACH END OF TUBE FOR DRAIN HOLES PLUG WITH AN535-0-2 SCREW

(B)

(A) MATERIAL FOR -6 & -6R MAY BE
(A) S.A.E. X4130 CHROME-MOLY WELDED STEEL TUBING, SPEC. AN-T-3, T.S. 80,000-125,000 PSI, OR
(B) X4130 CHROME-MOLY SEAMLESS STEEL TUBING, SPEC. AN-WW-T-850, T.S. 80,000-125,000 PSI

PART No.	STOCK	MATERIAL	DESCRIPTION	QTY
-R	48-5 AMR	28A5101	ANS535-0-2	1
-L	28-5 AML	28A5101	GRIP-A-NUT	1
-R	28-5 MA	28A5101		1
-L	28-5 MA	28A5101		1
-R	PBY-5B	28A5101		1
-L	PBY-5B	28A5101		1
R	PBY-5A	28A5101		1
L	PBY-5A	28A5101		1
R	PBY-5	28A5101		1
L	PBY-5	28A5101		1
-6R	1.25 O.D. X .058		GR-STL-34	1
-7	1.09 O.D. X .058		GR-STL-34	1
-8	1.25 O.D. X .049		NOTED	NOTED
-9	1.09 O.D. X .049		NOTED	NOTED

PARTS LIST PER ASSY.

REQUIREMENTS PER AIRPLANE	
REPLACES	1.25 SHEET NO.
REPLACED BY	ASSY NO.
SCALE	1"-0" NOTED
STAMP PART NUMBER WHERE SHOWN	

A C	
NAVY NORMALIZE	C-HEO
HEAT TREAT	FINISH

NAME
TUBE-ARM'T-FIRING GUARD

CONSOLIDATED AIRCRAFT CORP. San Diego Calif.

SIZE G DWG NO 28A5192

ENG. FILE

FINISH:
C = CAD. PLATE
HRO = HOT RAW LINSEED OIL

LET	ALTERATION	DATE	BY
A	Removed PB1-S Req & Added P.I. to PB1-S2 Upon to PB1-SA Sheet 4876		

28U5045-2
ARMOR PLATE

28A5608 (REF.)

28A5615 BOLT ASSY

AN 420-3-8 RIVET

NOTE:-
PEEN AS SHOWN AT SUB-ASSY-6

AN 350-4 NUT

SECT. C-C

Q7016-N17-125
CUSHION

28A5608 L/R
DOUBLER ASSEMBLY

AN 4-10A BOLT

Q7012-17-062 WASHER
AC 372-428 NUT
(4 OF EACH REQD)

28A5612-6
SUPPORT

AN 4-6A BOLT
AN 960-416 WASHER
28A5119-6 BAR

AN 501-416-8 SCREW
AN 316-4A NUT

30 CAL. B.A.M GUN M-2
B.Q 204674
(REF.)

28A5614-0
STRAP ASSEMBLY

AN 4-6 BOLT
AN 310-4 NUT
AN 380CP4 COTTER

NOTE:-
BACK NUT OFF TO ALLOW ROTATION OF ARMOR PLATE ASSEM.

SECTION A-A
-6 SUB ASSY (LH)

AN4-14A BOLT (2)

AC 372-428 NUT (2)
QB12-8-25 SPACER (2)

AN 960-416L WASHER
ONLY IF NECESSARY.
STRAP MUST BUTT AGAINST SPACER

28A5608L (REF.)

5 3/4 (REF.)

7 (REF.)

DRILL F (.257) IN 28A5609L
& 28A5609 R

28U5045-2 (REF.)

6 1/2 (REF.)

SECTION B-B
6-1-0

45° (REF.)

⑥ SUB ASSEMBLY

#1 TO #52 INCL. 50.849-50 CONT. NOS. 77713
50.968-21 CONT. NOS. 80476

AN 380C2-2
AN 470-3-10
AN 350-4
AN 310-4
AN 4-6
AN 501-416-8
AN 316-4A

28A5613
28A5608 R
28A5608 L
28A5612-6

-6 SUB ASSEMBLY

Q7016-N17-125
Q8120-25
Q7012-17-062
AN 960-416L
AC 372-428

AN 960-416
AN 4-14A
AN 4-6A
AN 4-6A

-6 SUB ASSEMBLY

PART NO	STOCK	MATERIAL	SPEC	REQ -0	REQ -2	REQ -3	REQ -4	REQ -5
PARTS LIST PER ASSY								

PB1-S A 28U551D

LEAD BASIN JOB	MODEL	NEXT ASSY	QTY
REQUIREMENTS PER AIRPLANE			
REPLACES			4.85#
REPLACED BY			ACT WT

STAMP PART NUMBER WHERE SHOWN

DRAWN 18-1-42

A C								PP	
NAVY NONE	NONE								
HEAT TREAT	FINISH								

NAME INSTALLATION - BOW GUN
ARMOR PLATE - REAR

CONSOLIDATED AIRCRAFT CORP. San Diego, Calif.

G 28A5605

R

LET	ALTERATION	DATE	BY
A	REVISED PER ✓ ITEM 5 ADDED P.I. TO #52. INCL. TO PRT-SA CONT. NO. 88476		
B	ADDED VIEW "A-A". NO WT CHG.		

NOTE:
JIG DRILL & SLOT AFTER SPOTWELDING TO MATCH 28A5612

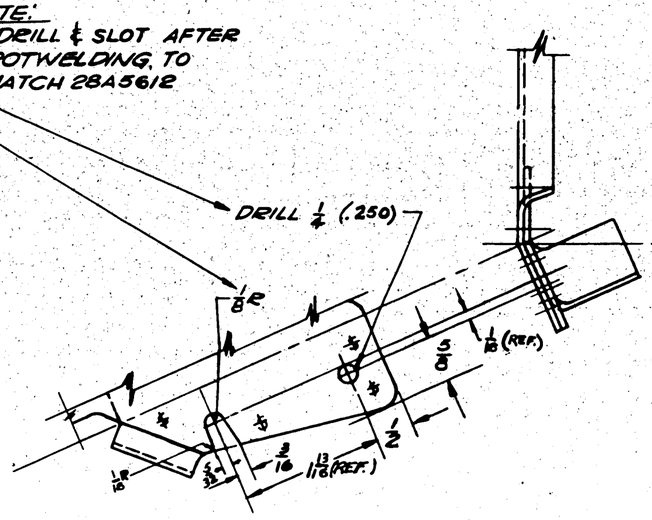

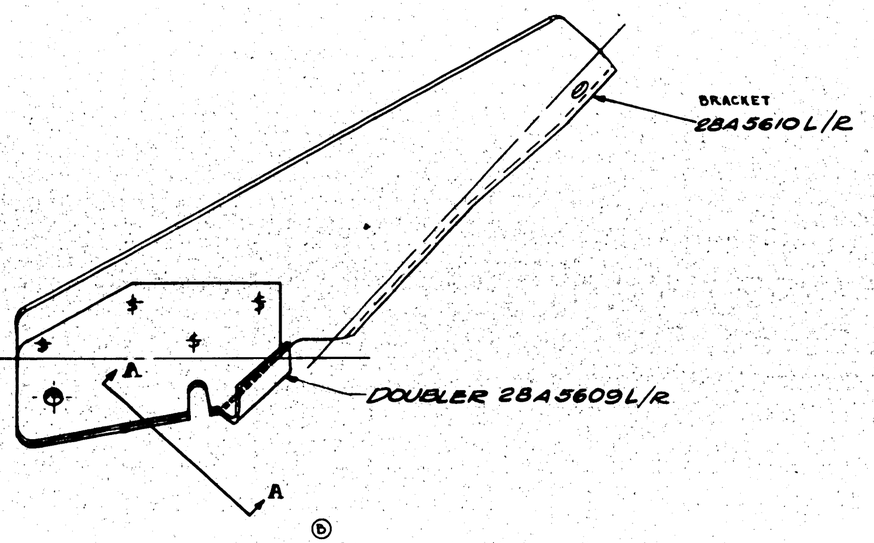

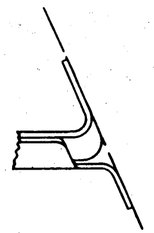

VIEW "A-A"

#1 TO #52 INCL. S.O. 953-21 CONT. NO. 88476
S.O. 949-50 CONT. NO. 71713

LET	MODEL	NEXT ASSY.	REQ.
R	P2Y-2A	28A5604	1
L	P2Y-2A	28A5605	1

REQUIREMENTS PER AIRPLANE
REPLACED
REPLACED BY
ASS'Y WT.
58 EACH WT.
SCALE 12"=1'-0"
STAMP PART NUMBER WHERE SHOWN

PART No	STOCK	MATERIAL	SPEC	LH RH REQ	LH RH REQ	LH RH REQ	LH RH REQ	LH RH REQ
28A5608				-0	-2	-3	-4	-5
28A5607				-0	-2	-3	-4	-5
28A5606				-0	-2	-3	-4	-5
28A5605				-0	-2	-3	-4	-5
28A5604				-0	-2	-3	-4	-5

PARTS LIST PER ASSY.

A C	
NAVY NONE	C-P-2AP
HEAT TREAT	FINISH

3/24/42 — DRAFT

NAME DOUBLER ASSEMBLY-BOW GUN ARMOR PLATE
CONSOLIDATED AIRCRAFT CORP. San Diego, Calif.
DWG G
OPP HAND 28A5608R
28A5608

2	ANODIC TREATMENT
P	P-27 PRIMER
AP	ALUMINIZED PRIMER
C	CADMIUM PLATE

LET	ALTERATION	DATE	BY
A	REMOVED PDY-6 REQ. & ADDED 6-6 REQ. #1 TO #52 INCL. TO PDY-5A CONT. 88976		

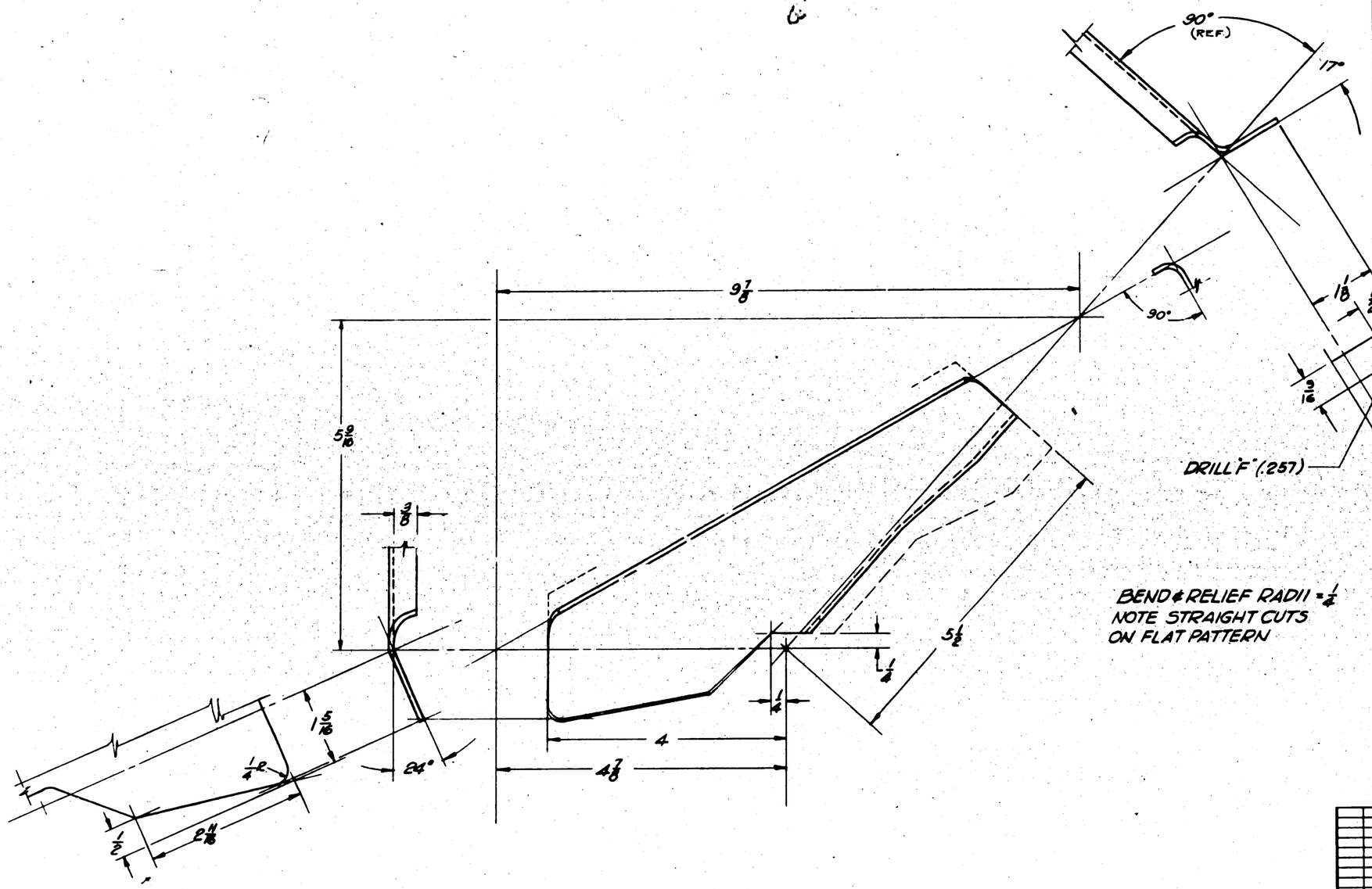

BEND & RELIEF RADII = 1/4
NOTE STRAIGHT CUTS ON FLAT PATTERN

*170 TO 52 INCL. SO 853-21 CONT. NO 88976 } SO 848-20 CONT. NO 77713 }

ASSY DASH NO.	MODEL	PART ASSY	REQ.
	P PBY-5A		1
	P PBY-5A		1

REQUIREMENTS PER AIRPLANE

REPLACED	-41 / -42 QUAD. 'DY'
REPLACED BY	ASY. 'DY'

UNLESS OTHERWISE SPECIFIED DIMENSIONS ARE IN INCHES — TOLERANCES: FRACTIONS ±1/64, DECIMALS ±.010, ANGLES ±1/2° — SCALE: 1 1/2" = 1'-0"

STAMP PART NUMBER WHERE SHOWN

PART NO	STOCK	MATERIAL	SPEC	LH REQ	RH REQ	LH REQ	RH REQ	LH REQ	RH REQ
				-0	-2	-3	-4	-5	

PARTS LIST PER ASSY.

A C	NONE	DRAWN	CHECK	STRUCT	MAT	ASSY	ENG
NAVY HEAT TREAT	FINISH	DRAFT					

NAME BRACKET-BOW GUN ARMOR PLATE

CONSOLIDATED AIRCRAFT CORP. SAN DIEGO, CALIF.

DWG G — 28A5610

LET	ALTERATION	DATE	BY
A	REMOVED PBY-5 SEQ. # NOS. 1 TO 32 INCL. TO PBY-5A CONT. # 88476		

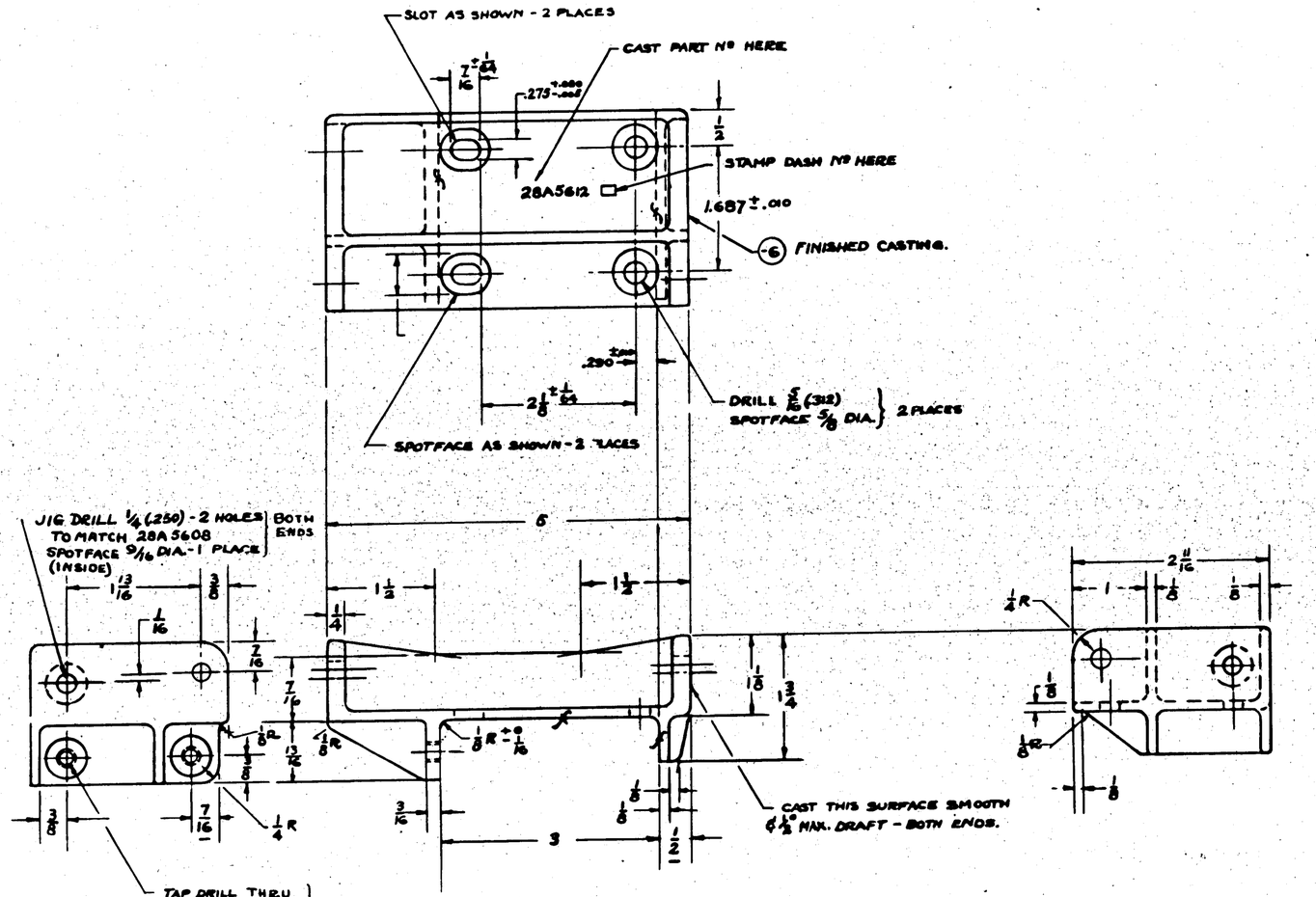

NOTE:
FILLET RADII - 1/8
BREAK EDGES 1/32 R

FINISH CODE	
Z	ANODIC TREATMENT
P	P-72 PRIMER
AP	ALUMINIZED PRIMER
C	CADMIUM PLATE

#1 TO #32 INCL. 50.953-21 CONT. Nº 88476 }
50.949-50 CONT. Nº 77713 }

-6 LAST DASH NO.	PBY-5A	28A5605	1
	MODEL	NEXT ASSY	QUAN.

REQUIREMENTS PER AIRPLANE

REPLACES	1.27# CALC WT
REPLACED BY	ADD'L WT
LIGHT OR DARKENING SHADED AREAS ON DRAWING INDICATES SCALE: 1/2in	SCALE 12"=1'-0"

STAMP PART NUMBER WHERE SHOWN

-6 FINISHED CASTING
-6 ROUGH CASTING Supply Source 44859-A

PART No	STOCK	MATERIAL	SPEC	LH REQ -0	RH REQ -2	LH REQ -3	RH REQ -4	LH REQ -5	RH REQ -6
PARTS LIST PER ASSY.									

A C
NAVY 150,000 PS.I. HEAT TREAT

BILLING 3-27-45
C-P-2AP
FINISH

DRAFT	CHECK	STRUCT	MAT	APPROVED	DWG
		RR			

NAME SUPPORT-BOW GUN ARMOR PLATE

OPP. HAND

DWG G

28A5612

CONSOLIDATED AIRCRAFT CORP. SAN DIEGO, CALIF.

LET	ALTERATION	DATE	BY
A	REMOVED PAV-5 REQ'd ADDED "33a" 53 INCL. TO PAV-5A Contract 8849		

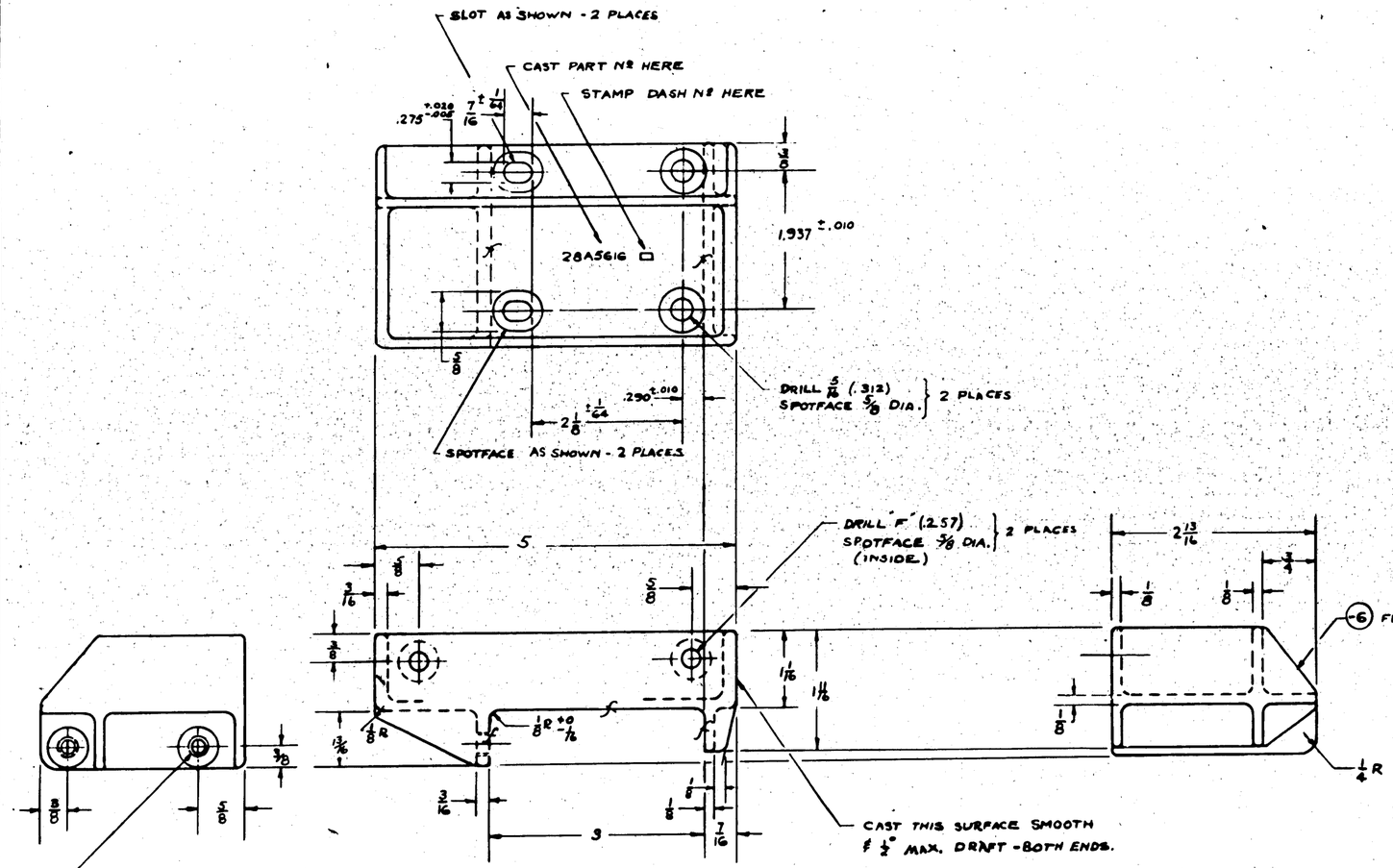

NOTE:
FILLET RADII 1/8
BREAK EDGES 1/32 R

FINISH CODE	
Z	ANODIC TREATMENT
P	P-7 PRIMER
AP	ALUMINIZED PRIMER
C	CADMIUM PLATE

"1 To "32 incl. S.O 953.21 CONTRACT NO. 8849
S.O 949.38 CONTRACT 7713

-6	P8Y-6A	28A5617	1
ASSY DASH NO.	MODEL	NEXT ASSY.	REQ.

REQUIREMENTS PER AIRPLANE
REPLACES 1120 Lbs WT
REPLACED BY ACT. WT.
SCALE 12" = 1'-0"
STAMP PART NUMBER WHERE SHOWN

PART No	STOCK	MATERIAL	SPEC.	LH REQ	RH REQ	LH REQ	RH REQ	LH REQ	RH REQ	LH REQ	RH REQ
-6	Finished Casting										
	Rough Casting	Magnesium	44B29-A								
PARTS LIST PER ASSY.				-0		-2		-3		-4	-5

A.C.
NAVY 120,000 T.S.
HEAT TREAT
C-P-2AP
FINISH
BILLING 2-26-42
DRAFT
CHECK
STRUCT
MAT
APPROVED
ENG

NAME SUPPORT - TUNNEL GUN ARMOR PLATE
CONSOLIDATED AIRCRAFT CORP. San Diego, Calif.
OPP. HAND
DWG. G
SIZE
28A5616

RD 1/13/42

Hull section formulas

Sta. #3 forward: $F = \frac{A^2}{2D} + \frac{D}{2}$

Sta. #3 to step: $H = \frac{(G-E)\cos K}{1-\cos K}$

Between steps: $H = .8461 \cdot J$

Aft of step: $F = \frac{1.17157A^2 - 10.848A + B^2 - 10.022B - .82842AB + 25.113}{2B - .82842A - 25.022}$

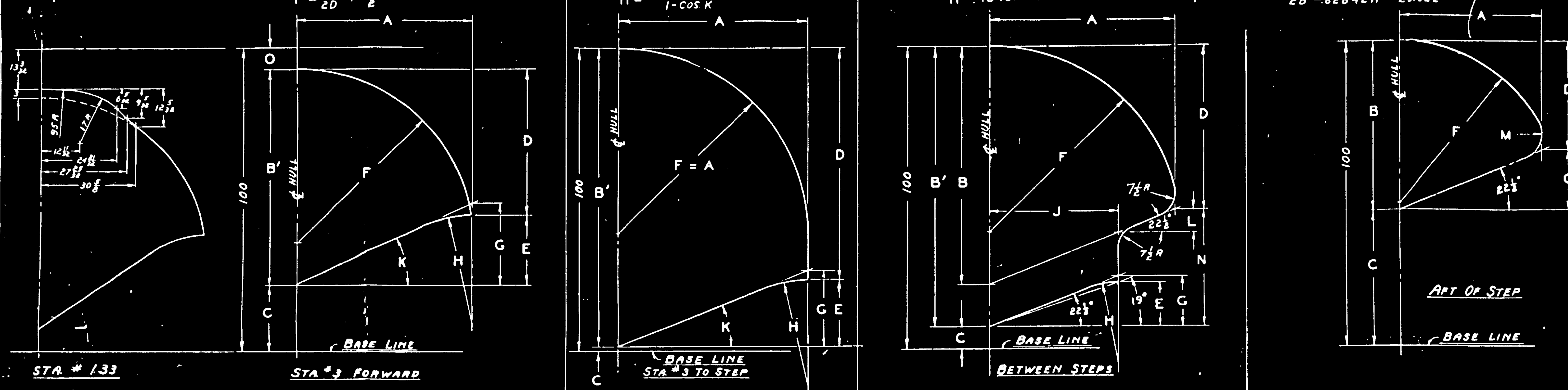

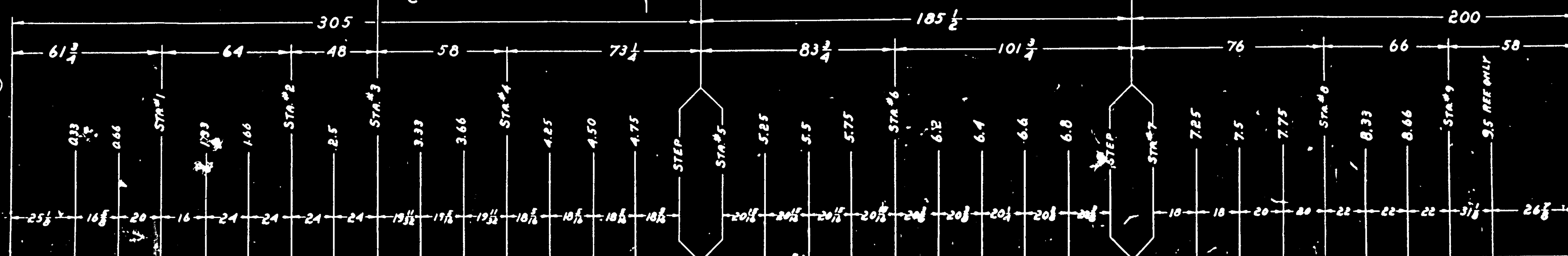

		0.33	0.66	STA #1	1.33	1.66	STA #2	2.5	STA #3	3.33	3.66	STA #4	4.25	4.50	4.75	STEP	STA #5	5.25	5.5	5.75	STA #6	6.2	6.4	6.6	6.8	STEP	STA #7	7.25	7.5	7.75	STA #8	8.33	8.66	STA #9	9.5 REF ONLY			
A		30 13/16	39 7/16	47 1/4	52 1/16	57 1/16	59 29/32	61 9/64	61 1/4	61 1/4	61 1/4	61 1/4	61 1/4	61 1/4	61 1/4	61 1/4	61 1/4	61	60 21/32	59 15/16	58 63/64	57 41/64	56 1/8	54 1/4	52 1/32	49 1/2	49 1/2	47 1/8	44 7/16	41 1/4	37 3/4	33 9/16	28 15/16	23 5/8	15 31/32		10 3/4	A
B		—	—	—	—	—	—	—	—	—	—	—	—	—	—	—	94 43/64	90 33/64	86 17/32	82 15/32	78 13/32	74 7/16	70 21/64	66 25/64	62 37/64	58 5/8	58 5/8	55 1/8	51 5/8	47 47/64	43 27/32	39 37/64	35 13/64	31 1/64	24 63/64		19 3/4	B
C		22 7/8	14 27/32	9 21/32	7 9/32	5 1/16	3 21/32	2 27/32	2 25/64	2 1/16	1 23/32	1 11/32	1 1/32	43/64	21/64	0	4 3/32	6 45/64	8 11/16	10 31/32	13 17/64	15 1/2	17 47/64	19 41/64	22 11/64	24 13/32	41 3/8	44 7/8	48 1/8	52 17/64	36 5/32	60 47/64	64 45/64	68 41/64	75 1/64		80 1/4	C
D		28 25/32	32 11/64	39	45 5/16	54 11/32	62 7/16	68 63/64	73 39/64	75 15/16	77 1/16	77 9/16	77 7/8	78 15/64	78 37/64	78 63/64	74 11/16	65 11/32	61 13/32	57 41/64	53 63/64	50 7/16	47 15/64	44 5/64	41 1/64	38 1/8	38 1/8	35 39/64	33 7/32	30 41/64	28 5/32	25 43/64	23 5/16	21 15/64	18 3/8		15 19/64	D
E		23 1/8	30 13/32	32 11/32	31 5/16	28 25/32	26 3/32	23 59/64	22 3/8	21 13/32	21 7/32	21 3/32	21 3/32	21 3/32	21 3/32	21 3/32	21 3/32	20 7/8	20 7/16	19 15/32	17 57/64	15 15/16	13	9 31/32	5 5/8	—	—	—	—	—	—	—	—	—	—		—	E
F		30 7/8	40 17/64	48 1/8	52 9/16	57 1/8	59 29/32	61 9/64	61 1/4	61 1/4	61 1/4	61 1/4	61 1/4	61 1/4	61 1/4	61 1/4	61 1/4	61 1/16	60 15/16	60 9/16	60 3/32	59 17/32	58 29/32	57 7/8	56 17/32	54 3/4	54 3/4	53 3/64	50 51/64	47 61/64	44 1/2	39 57/64	34 11/64	26 11/16	16 17/32		10 13/16	F
G		27 11/16	36 7/8	38 29/32	37 31/32	34 5/8	31 3/8	28 25/32	26 15/16	26	25 17/32	25 5/8	25 5/8	25 5/8	25 5/8	25 5/8	25 5/8	25 9/64	24 13/32	23 7/16	21 9/16	19 1/32	15 21/64	11 37/64	6 13/32	5/8	20 1/2	19 33/64	18 13/32	17 3/32	15 11/16	13 29/32	11 63/64	9 25/32	6 39/64		4 29/64	G
H		13 1/2	17 1/64	22 5/32	27 7/64	34 9/16	41	46 1/8	49 7/16	50 13/16	51 9/16	51 13/16	51 13/16	51 13/16	51 13/16	51 13/16	51 13/16	51 3/8	50 5/16	47 53/64	44 1/32	38 57/64	31 31/32	23 13/32	13 7/32	—	—	—	—	—	—	—	—	—	—		—	H
J		—	—	—	—	—	—	—	—	—	—	—	—	—	—	—	61 1/4	60 11/16	59 3/8	56 13/32	52 1/16	45 15/16	37 3/4	27 31/32	15 5/8	1 11/32	—	—	—	—	—	—	—	—	—		—	J
K		42°4'	43°5'	39°28'	35°53'	31°15'	27°39'	25°12'	23°44'	23°0'	22°38'	22°30'	22°30'	22°30'	22°30'	22°30'	—	—	—	—	—	—	—	—	—	—	—	—	—	—	—	—	—	—	—		—	K
L	•	—	—	—	—	—	—	—	—	—	—	—	—	—	—	—	0	1/8	17/32	1 25/64	2 37/64	4 37/64	7 29/64	10 57/64	15 3/32	19 7/8	—	—	—	—	—	—	—	—	—		—	L
M		—	—	—	—	—	—	—	—	—	—	—	—	—	—	—	—	—	—	—	—	—	—	—	—	—	7 1/2	7 1/2	7 1/2	7 1/2	7 1/2	7 1/2	7 1/2	7 1/2	7 1/2		7 1/2	M
N		—	—	—	—	—	—	—	—	—	—	—	—	—	—	—	—	28 17/64	29 53/64	31 25/64	32 3/4	33 15/16	35 1/32	35 31/32	36 13/16	37 15/32	—	—	—	—	—	—	—	—	—		—	N
O		25 7/32	22 25/64	19	16 3/8	11 13/16	7 13/16	4 1/4	1 5/8	13/32	0	—	—	—	—	—	—	—	—	—	—	—	—	—	—	—	—	—	—	—	—	—	—	—	—		—	O
B'		51 29/32	62 49/64	71 11/32	76 15/16	83 1/8	88 17/32	92 29/32	95 63/64	97 17/32	98 9/32	98 21/32	98 31/32	99 41/64	99 43/64	100	95 53/64	93 29/64	91 5/16	89 1/32	86 47/64	84 1/2	82 17/64	80 3/64	77 53/64	75 19/32	—	—	—	—	—	—	—	—	—		—	B'

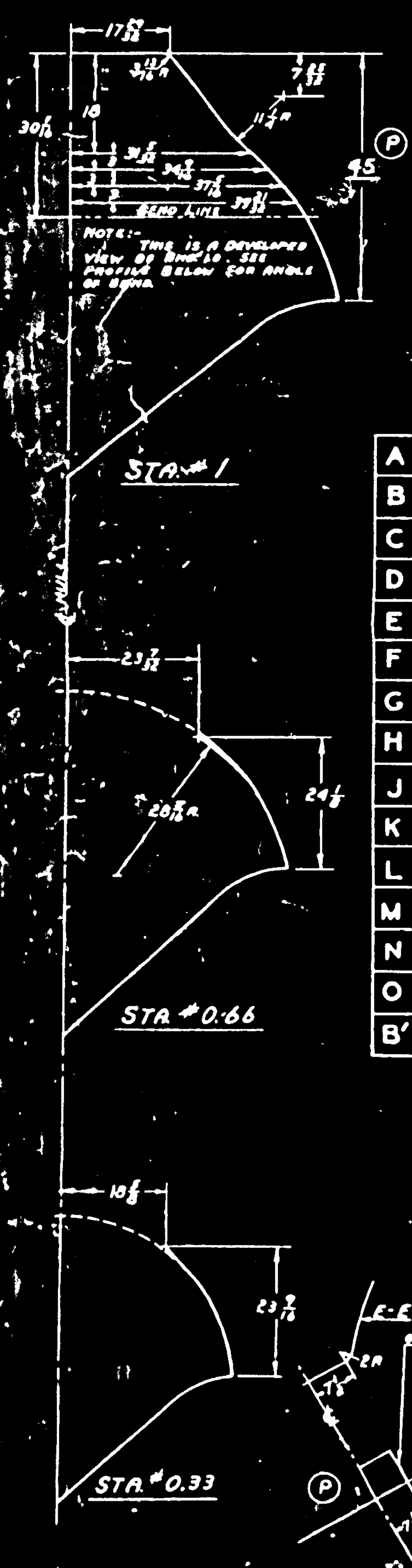

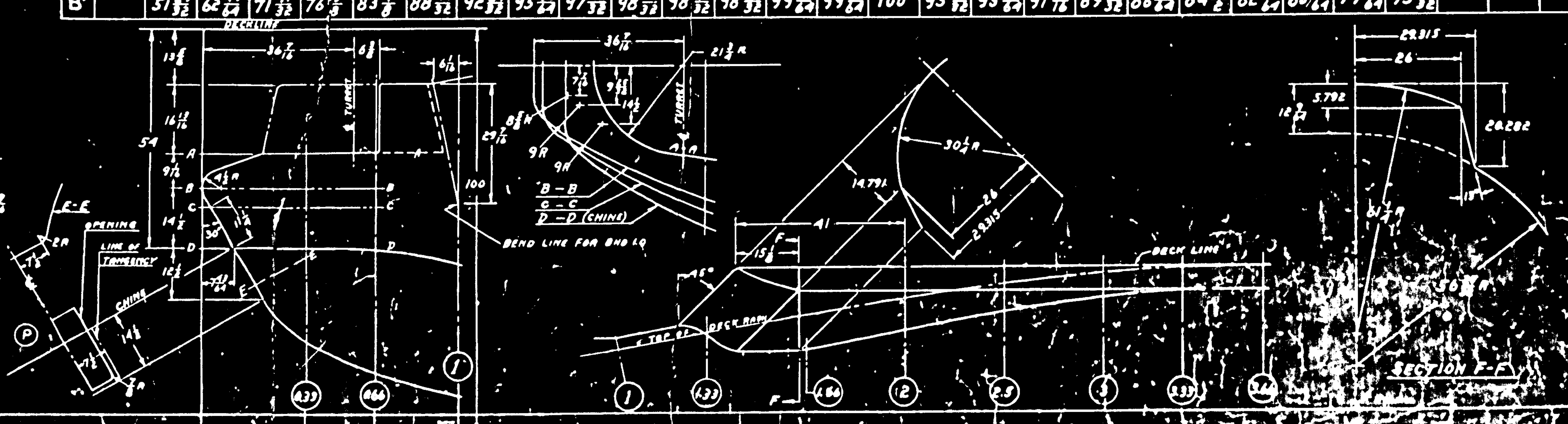

Reference Plans.
28J1020 – Form Contours – Hull – Parting Strip – Pilot's Enclosure.
28J1059 – Lines – Hull – Nose.
28R161 – Tail Lines – Hull

Let	Alteration	Date	By
O	TRACED UP TO DATE	7-13-37	
P	STA #1 VIEW: DIM 45 WAS 39 1/4 HULL NOSE VIEW: REMOVED DIM'S 6 1/4, 6 5/8 & 19 3/4	3-6-42	

E.O. #A26341

Model	Next Assy.
28-5MA	
28-5MC	
28-5ME	
PBY-5A	
PBY-5	
PBY-4	28B1000
PBY-3	28B1000
PBY-2	28B1000
PBY-1	28B1000
XP3Y-1	28B001

Consolidated Aircraft Corp. Buffalo, N.Y.

KOEN · 6-1-33

OFFSETS - HULL

G 28B003

SUPPLIES & EQUIPMENT CLASSIFICATION			
LET	ALTERATION	DATE	BY
B	TRACED UP TO DATE	8-28-36	[illegible]
C	ADDED -2	4-22-39	[illegible]
D	CHANGED DIMS 4 3/4 & 3 11/32 WERE 2 6/8 & 5 9/16	11-18-40	SINGER

F.O. 28545-PBY-5A

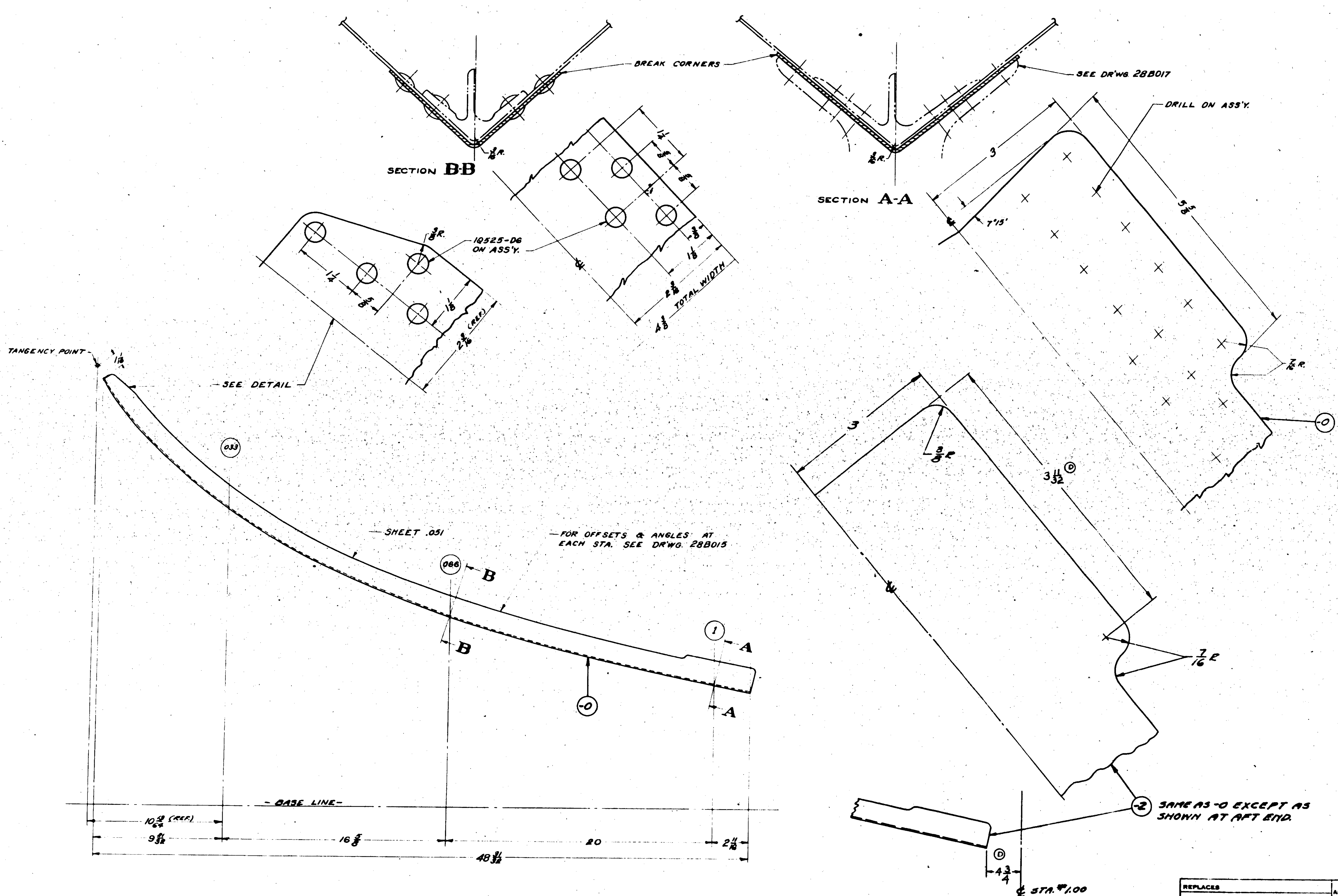

FINISH:
ANODIZE
P27 PRIMER
2 BITUMASTIC COMPOUND
WATERTIGHT FAYING SURFACES

O.H.	MODEL	NEXT ASSY.	REQ.
-2	PBY-5A	28B5500	1
	PBY-5B	28B6000	1
-2	XPBY-5		
-0	PBY-4	28B1000	
-0	PBY-3	28B1000	
-0	PBY-2	28B1000	
-0	PBY-1	28B1000	
-0	XP3Y-1	28B001	

REQUIREMENTS PER AIRPLANE — PART NO. — MAT. — PARTS LIST PER ASSY.

REPLACES
REPLACED BY
LIMIT ON DIMENSIONS UNLESS OTHERWISE SPECIFIED ±

[redacted]

APPROVED [illegible] DATE
CALC. WT. .385 — ACT. WT.
SCALE 3" = 1'-0", 12" = 1'-0"
AC
NAVY AL. ALLOY — MATERIAL
24ST ALC. COND. A — SPEC.
SR-53 — HEAT TREAT
Z-P-2BC-W8 — FINISH
DRAWN [illegible] 5-12-34 — CHECK [illegible] — EXAM. [illegible] 6-5-34 — ENG. [illegible]

CONSOLIDATED AIRCRAFT CORP. BUFFALO, N. Y.
STAMP PT. No. WHERE SHOWN

NAME: PATCH PLATE HULL - BOW - STA. 0 - #1.

OPP. HAND

DWG. SIZE G — 28B018

SUPPLIES & EQUIPMENT CLASSIFICATION			
LET	ALTERATION	DATE	BY
C	TRACED UP TO DATE	7-21-37	[illegible]

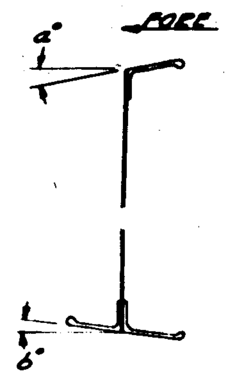

TYPICAL SECT. AS D-D FORWARD OF STA.#5

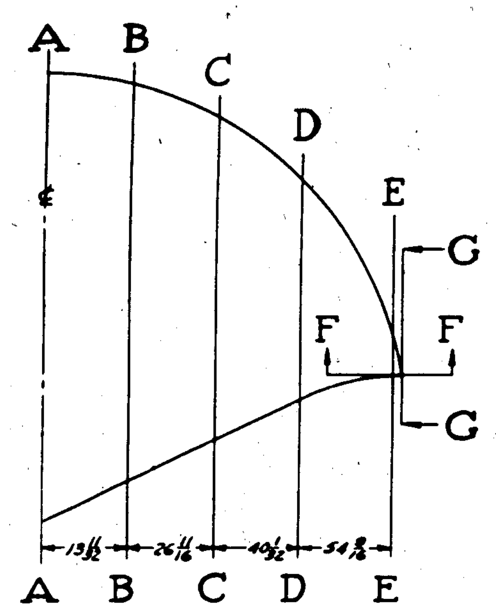

STA.#3 FORWARD

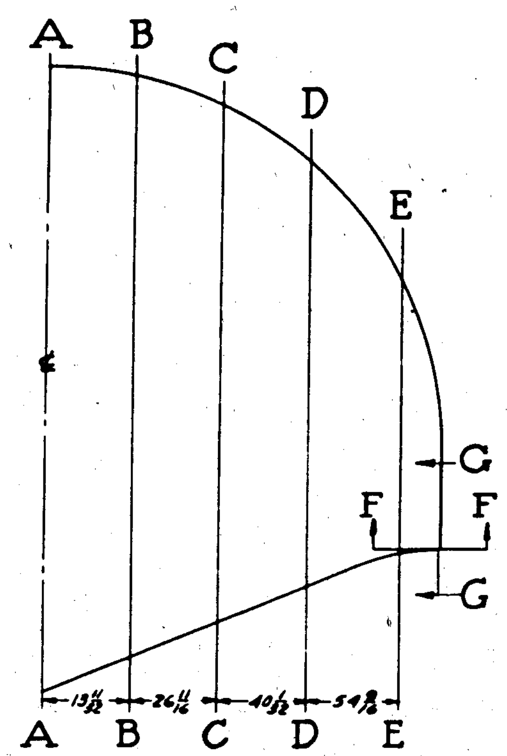

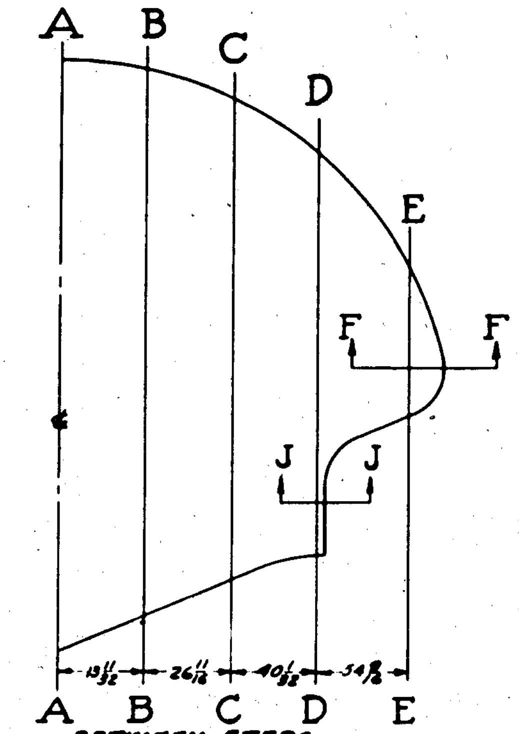

BETWEEN STEPS

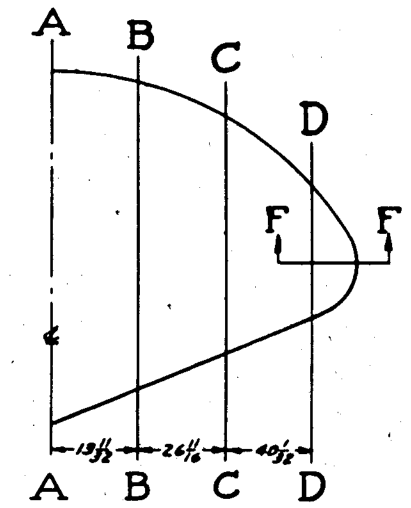

AFT OF STEP

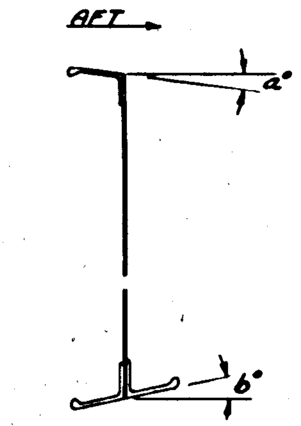

TYPICAL SECT. AS D-D - AFT OF STA.#5

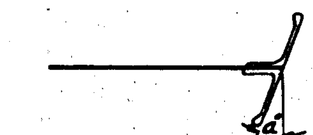

TYPICAL SECT. OF F-F AFT OF STA.#5

	STATION	3.66	3.83	4.	4.125	4.25	4.375	4.5	4.625	4.75	4.875	5.	5.125	5.25	5.375	5.5
	SECTION	b°	b°	b°	b°	b°	b°	b°	b°	b°	b°	b°	b°	b°	b°	b°
OUTER FAIRING SUPER-STRUCTURE	K-K			*3°	#1½	½	2	3	3½	5	6	7°	8	10	12	15
	L-L			*4°	#2½	½	2	3½	4½	6	7½	8½°	9½	11½	13	18
	M-M			*5°	#3	0		3½	5	6½	8	8½°	10	12	15	
	N-N			*6°	#4	*½		3½	5	6½	8	8½°	10½	14		
	O-O			*7°	#4½	#1	1½	3½	5	6½	8	10°	12	17		
	P-P			*8°	#5½	#1½	1	3	5	7	8½	11½°	14½	7		
	Q-Q			—								13°	15½	17		
	R-R			*9°	#6½	#3	½	3	5	7	9½	—				
	S-S			*12½°	#13	#9½	#7					—				
	T-T			*9°								3°				
INNER FAIRING SUPER-STRUCTURE	N-N			*1½°	#2	½		3	3½	5	6	6½°				
	O-O			0°	#1½	½	31½	3	3½	4	4½	5°				
	P-P			0°	0	1	31½	2½	3	3½	3½	3°				
	Q-Q			—								2½°				
	R-R			0°	1	1½	21½	2½	2½	3	3½	—				
	S-S			1½°	1	1	1½					—				

	STATION	0.33	0.66	1.	1.33	1.66	2.	2.5	3.	3.33	3.66	4.	4.25	4.50	4.75	5.	5.25	5.5	5.75	6.	6.2	6.4	6.6	6.8	7	7.25	7.50	7.75	8.	8.33	8.66	9.			STATION
	SECTION	a°	a°	a°	a°	a°	a°	a°	a°	a°	a°	a°	a°	a°	a°	a°	a°	a°	a°	a°	a°	a°	a°	a°	a°	a°	a°	a°	a°	a°	a°	a°			SECTION
ABOVE CHINE	A-A	—	1°	1°	1°	0° ←																										→ 0°			A-A
	B-B	—	0° ←																								→ 0°	3½°	6°	5½°	3°	5°			B-B
	C-C	37½°	16°	18°	10°	10°	9½°	7½°	4½°	2½°	½°	0° ←										→ 0°	½°	½°	1°	1°	1°	1½°	3°	5½°	9°	—			C-C
	D-D	—	—	22½°	17½°	13°	11°	8°	4½°	2½°	½°	0° ←					→ 0°	½°	½°	½°	½°	½°	1°	2°	2½°	3½°	4½°	7°	—	—	—	—			D-D
	E-E	—	—	—	—	27°	16°	9°	4½°	2½°	½°	0° ←				→ 0°	1°	1°	1°	1½°	2½°	3½°	—	—	—	—	—	—	—	—	—	—			E-E
	F-F	30°	25°	19°	14½°	9°	5°	1½°	0° ←							→ 0°	1°	1½°	2½°	3°	4°	5°	5½°	6½°	7½°	8°	9°	9½°	10°	11½°	12½°	14½°			F-F
	SECTION	b°	b°	b°	b°	b°	b°	b°	b°	b°	b°	b°	b°	b°	b°	b°	b°	b°	b°	b°	b°	b°	b°	b°	b°	b°	b°	b°	b°	b°	b°	b°			SECTION
BELOW CHINE	A-A	35½°	19°	10½°	7°	4°	3°	1½°	1° ←						→ 1°	6° ←								→ 6°	11° ←							→ 11°			A-A
	B-B	29°	21½°	15½°	11½°	7°	5°	2½°	1½°	1½°	1° ←				→ 1°	6°								6°	11°							11°			B-B
	C-C	9½°	24°	19½°	15½°	10½°	6½°	4°	2½°	2°	1½°	1° ←			→ 1°	6°								6°	11°							11°			C-C
	D-D	—	—	18°	17°	12½°	9°	5°	3½°	2°	1½°	1° ←			→ 1°	6°								6°	11°							11°			D-D
	E-E	—	—	—	—	—	8½°	6°	4°	2½°	1½°	1° ←			→ 1°	6°								6°	11°							11°			E-E
	G-G	0°	6°	12°	12°	10½°	8°	6°	4°	2½°	1½°	1° ←			→ 1°	6° ←								→ 6°	11° ←							→ 11°			G-G
	J-J	—	—	—	—	—	—	—	—	—	—	—	—	—	—	½°	2°	5½°	10°	14°	19½°	24°	28½°	33°	36°	—	—	—	—	—	—	—			J-J
INNER FAIRING SUPER-STRUCTURE	L-L																																		
	M-M								#2½°	½°	2°	3°	4°	6°	7°																				
	SECTION								4.125	4.25	4.375	4.50	4.625	4.75	4.875	5.0																			

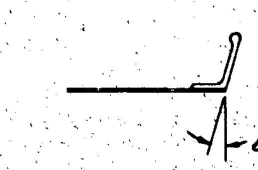

SECT. J-J

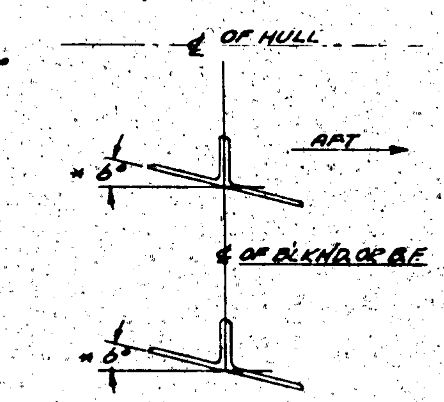

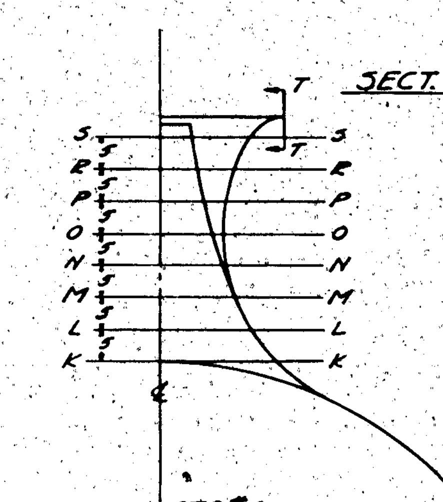

STA.#4

ALL ANGLES IN SUPER-STRUCTURE CONVERGING FORWARD AS SHOWN ARE INDICATED BY AN ASTERISK *. ALL OTHERS CONVERGE TOWARD REAR.

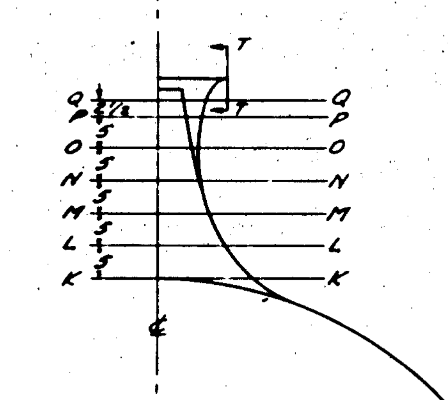

STA.#5

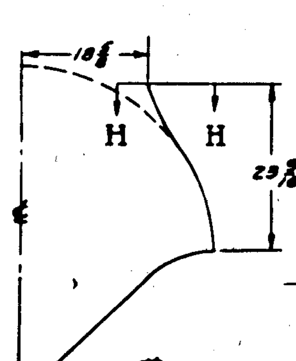

STA.#0.33

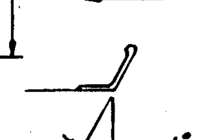

SECT. H-H

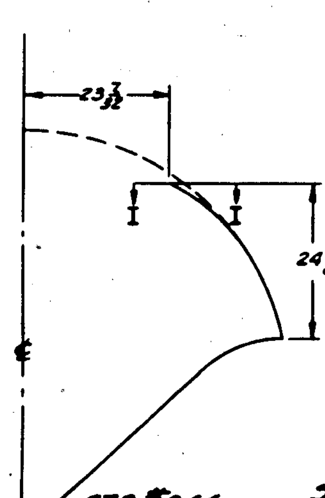

STA.#0.66

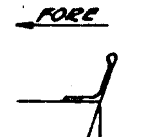

SECT. I-I

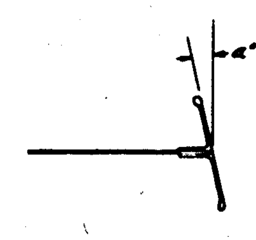

TYPICAL SECT. OF F-F FORWARD OF STA.#5

PBY-5A					
PBY-4					
PBY-3					
PBY-2					
PBY-1					
XP3Y-1					
O.H.	MODEL	NEXT ASSY.	REQ.	ST'D PARTS	LH RH REQ. / PART NO. / LH RH REQ.
REQUIREMENTS PER AIRPLANE				MAT.	PARTS LIST PER ASSY.

REPLACES

REPLACED BY

LIMIT ON DIMENSIONS UNLESS OTHERWISE SPECIFIED ±

[redacted]

APPROVED [illegible] DATE 7-21-37

CALC. WT. | ACT. WT.

SCALE

AC

NAVY

MATERIAL | SPEC. | HEAT TREAT | FINISH

DRAFT: [illegible] | CHECK: H.A.B. 7-23-37 | EXAM. | ENG.

CONSOLIDATED AIRCRAFT CORP. BUFFALO, N.Y.

STAMP PT. No. WHERE SHOWN

NAME: BULKHEAD ANGLES HULL-TABLE

OPP. HAND

DWG. SIZE G 288036

[illegible] CO., INC. BUFFALO IMPERIAL TRACING CLOTH

LET	ALTERATION	DATE	BY
R	TRACED NO WT. CHG.	10/13/36	[illegible]

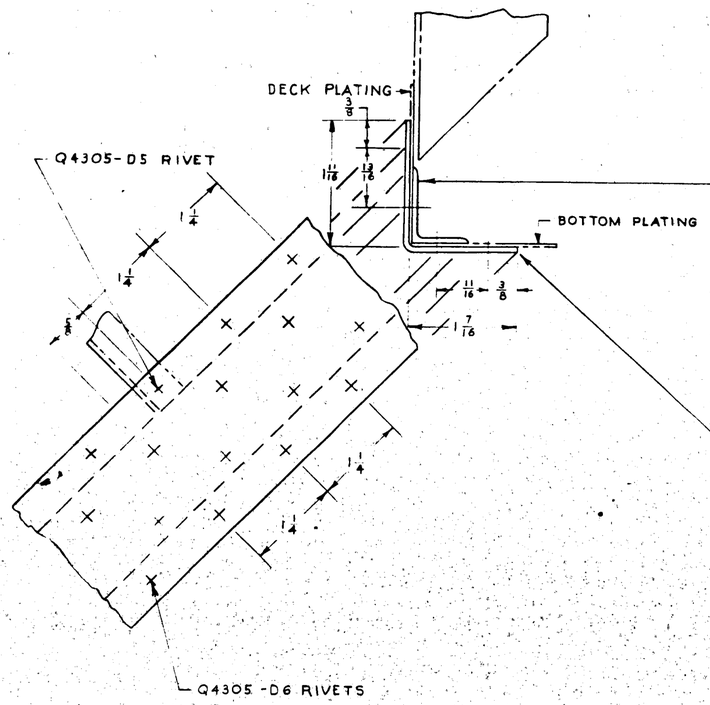

INNER CHINE ANGLE -NOSE TO STA. #7

-10 -L.H. FRONT - 23" LONG
-11 -R.H. FRONT - 23" LONG
-12 -L.H.-NOSE PLATE TO STA. #2 - 124" LONG
-13 -R.H.-NOSE PLATE TO STA #2 - 124" LONG
-14 -L.H.- STA. #2 TO #4 - 108" LONG
-15 -R.H.- STA. #2 TO #4 - 108" LONG
-16 -L.H.- STA. #4 TO #5 74" LONG
-17 -R.H.- STA. #4 TO #5 74" LONG
-18 -L.H. - STA. #5 TO #6 87" LONG
-19 -R.H. -STA. #5 TO #6 87" LONG
-20 -L.H.-STA. #6 TO #7 116" LONG
-21 -R.H. -STA. #6 TO #7 116" LONG
OVERLAP AT JOINT BETWEEN -10 & -12 & -11 & 13 TO BE 3½"

OUTSIDE CHINE ANGLE -NOSE TO STA. #5
SPLICES OCCUR AT POINTS MIDWAY BETWEEN STA #1 & #1.33 & STA. #2.50 & #3. OVERLAP AT SPLICES TO BE 4½
-2 -L.H. FRONT -87" LONG
-3 -R.H. FRONT -87" LONG
-4 -L.H. CENTER -100" LONG
-5 -R.H. CENTER -100" LONG
-6 -L.H. REAR -144" LONG
-7 -R.H. REAR -144" LONG

OUTSIDE CHINE ANGLE -STA #5 TO STA. #7
-8 -L.H -FRONT
-9 -R.H. -FRONT
-22 -L.H. -REAR
-23 -R.H. -REAR
— SEE TABULATION
SPLICE TO BE LOCATED BETWEEN STA 6 & #6.2
OVERLAP TO BE 4½"
-26 -L.H. - 8" LONG
-27 -R.H. - 8 LONG

OUTSIDE CHINE ANGLE -NOSE TO STA. #5
SPLICE BETWEEN -52 & -54, -53 & -55 WILL BE LOCATED JUST FORWARD OF STA. #0.33
-52 -L.H. - FRONT - 31" LONG
-53 -RH. - FRONT - 31" LONG
-54 -L.H. -CENTER -154" LONG
-55 -R.H. -CENTER -154" LONG

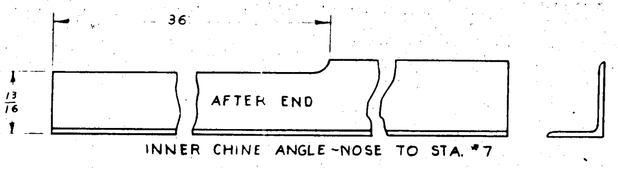

INNER CHINE ANGLE -NOSE TO STA. #7

DASH NO	LENGTH FOR PBY 1	LENGTH FOR PBY 2	LENGTH FOR PBY 3	LENGTH FOR ANY FUTURE SHIPS OR SPARES
8 LH	97	99	94	97
9 RH	97	99	94	97
22 LH	110	108	113	115
22 RH	110	108	113	115

C. 91876

C70496 #9 & ON
26-SME #3 & ON

C.70496 #1 - 8
#1 & 2

FINISH CODE	
Z	[illegible] TREATMENT
P	[illegible] PRIMER
GP	[illegible] PLATE
C	[illegible] PLATE
WS	WATER TIGHT FAYING SURFACE

-50	PBY-5	28B6000	1
-560	PBY-5A	28B5300	1
-560	28-5AME & NNC	28B5600	1 EA.
-50	PBY-5	28B1000	1
-50	28-5ME & NNC	28B1000	1 EA.
-50	PBY-5B	28B6000	1
-0	PBY-5	28B1000	1
-0	28-3ME	28B1000	1
-50	28-5MA & NNC	28B1000	1 EA.
-0	PBY-12,3 & 4	28B1000	1 EA.
-0	XPBY-1	28B1001	

ASSY DASH NO.	MODEL	NEXT ASSY	REQ.

REQUIREMENTS PER AIRPLANE

REPLACES 28B076 OF 9-2936 — S.A. S.H.A. CALC. WT.

REPLACED BY — ACT. WT.

UNLESS OTHERWISE SPECIFIED DIMENSIONS ARE IN INCHES. TOLERANCES ON DECIMALS ± .010 — SCALE 12" = 1'-0"

STAMP PART NUMBER WHERE SHOWN

PART No	STOCK	MATERIAL	SPEC.	LH REQ.	RH REQ.	LH REQ.	RH REQ.	LH REQ.	RH REQ.	LH REQ.	RH REQ.
Q4305-D6											
Q4305-D5											
-55	.064 X 3 1/4 X 154 1/4	AL. ALLOY	QQ-A-355 T								
-54	.064 X 3 1/2 X 154 1/4										
-53	.064 X 3 1/4 X 31 1/4										
-52	.064 X 3 1/4 X 31 1/4										
-27	.064 X 3 1/4 X 8 1/8										
-26	.064 X 3 1/4 X 8 1/8										
-23	.040 X 3 1/8 X 115 1/4										
-22	.040 X 3 1/8 X 115 1/4		QQ-A-355 T								
-21	DIE #1288 X 116 1/4		QQ-A-354 T								
-20	X 116 1/4										
-19	X 87 1/4										
-18	X 87 1/4										
-17	X 74 1/4										
-16	X 74 1/4										
-15	X 108 1/4										
-14	X 108 1/4										
-13	X 124 1/4										
-12	DIE #1288 X 124 1/4		QQ-A-354 T								
-11	.078 X 1 7/8 X 28 1/8		QQ-A-355 T								
-10	.078 X 1 7/8 X 28 1/8										
-9	.040 X 3 1/4 X 97 1/4										
-8	.040 X 3 1/4 X 97 1/4										
-7	.064 X 3 1/4 X 144 1/4										
-6	.064 X 3 1/4 X 144 1/4										
-5	.064 X 3 1/4 X 100 1/4										
-4	.064 X 3 1/4 X 100 1/4										
-3	.064 X 3 1/4 X 87 1/4										
-2	.064 X 3 1/4 X 87 1/4	AL. ALLOY	QQ-A-355 T								

PARTS LIST PER ASSY.

A.C.			B.D.I.	J.F.S.			L.C.W.		
NAVY	Z-P-GP-W.S.		6-26-36	9-29-36			10/3/36	R	
HEAT TREAT	FINISH		DRAFT	CHECK	STRUCT.	MAT.	APPROV.	ENG.	

NAME: CHINE ~ HULL ~ SECTION

OPP. HAND

SIZE G — DWG. 28B076

CONSOLIDATED AIRCRAFT CORP. SAN DIEGO, CALIF.

28B076

LET	ALTERATION	DATE	BY
K	REDRAWN PER E.O. 23179		
L	ADDED VIEW A-A & B-B IN BASIC		
	ADDED AC 372-D832 & AC 365-D832 TO VIEW B-B		
	NO WT. CHG.		

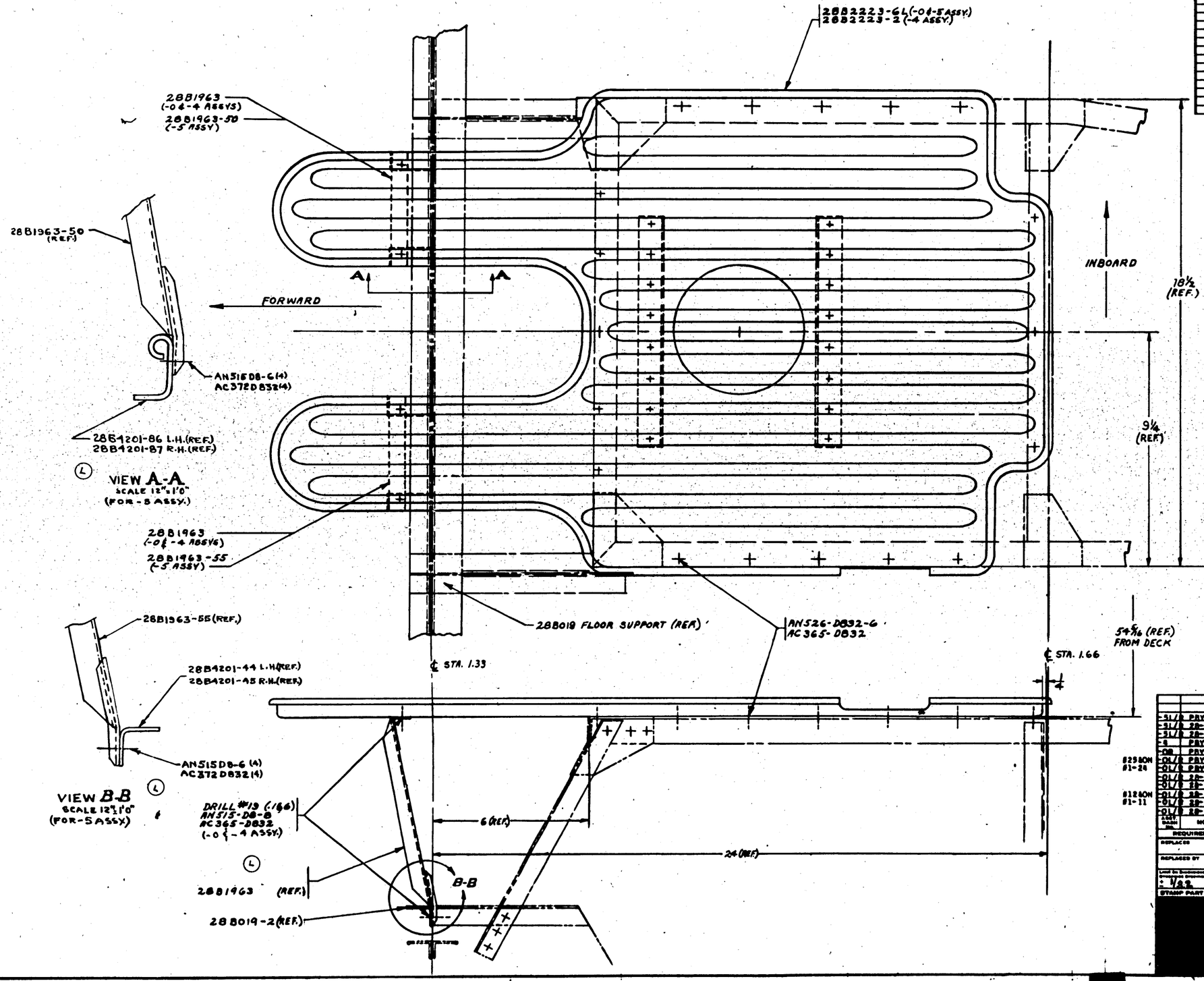

PART NO	STOCK	MATERIAL	SPEC.	-5 L/R REQ.	-5 RH REQ.	-5A L/R REQ.	-5A RH REQ.	-5B L/R REQ.	-5B RH REQ.	-5C L/R REQ.	-5C RH REQ.
PARTS LIST PER ASSY.				-0	-2	-3	-4	-5			
-5 L/R PRV-5A	28B5100			1 EA							
-5 L/R 28-5AHN	28B5100			1 EA							
-5 L/R 28-5AHC	28B5100			1 EA							
-5 PRV-5B	28B5100			1							
-5B PRV-5R	28B5100			1							
-01 L/R PRV-3	28B5100			1 EA							
-01 L/R PRV-3	28B5100			1 EA							
-01 L/R 28-5HN	28B5100			1 EA							
-01 L/R 28-5HC	28B5100			1 EA							
-01 L/R 28-5HC	28B5100			1 EA							
-01 L/R 28-5HC	28B5100			1 EA							
-01 L/R 28-5HA	28B5100			1 EA							
829 SON #1-24											
812 SON #1-11											
				2	2			2			
				1	1						
				1							
					1						

AC372-D-832
AN515-D8-6
AC365-D832
28B1963-55
28B1963-50
28B2223-6L
28B2223-2

LAST DASH NO.	MODEL	NEXT ASSY.	NO.
REQUIREMENTS PER AIRPLANE			
REPLACES		3.3 Basic Qty.	
REPLACED BY		3.5 Next Qty.	
Lines on Drawings Unless Otherwise Specified: ± 1/32	SCALE (NOTED)	6"=1'0"	
STAMP PART NUMBER WHERE SHOWN			

A C			DESIGNED K.KENZIE		HAM	L.C.W.
NAVY			APPROVED			4-16-57
HEAT TREAT	FINISH		DRAFT	CHECK	STRESS	MAT. APPROV. ENG.

NAME: PILOTS' FLOOR
HULL - INSTALLATION

OPP. HAND 28B224-R

CONSOLIDATED AIRCRAFT CORP. San Diego, Calif.

Dwg. G

28B224

SUPPLIES & EQUIPMENT CLASSIFICATION			
LET	ALTERATION	DATE	BY
A	TRACED UP TO DATE	4-27-37	[illegible]

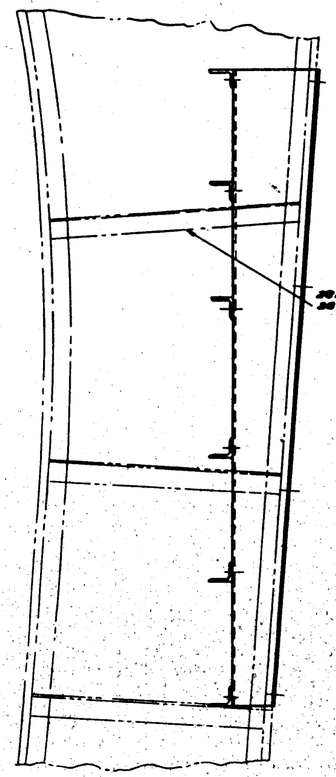

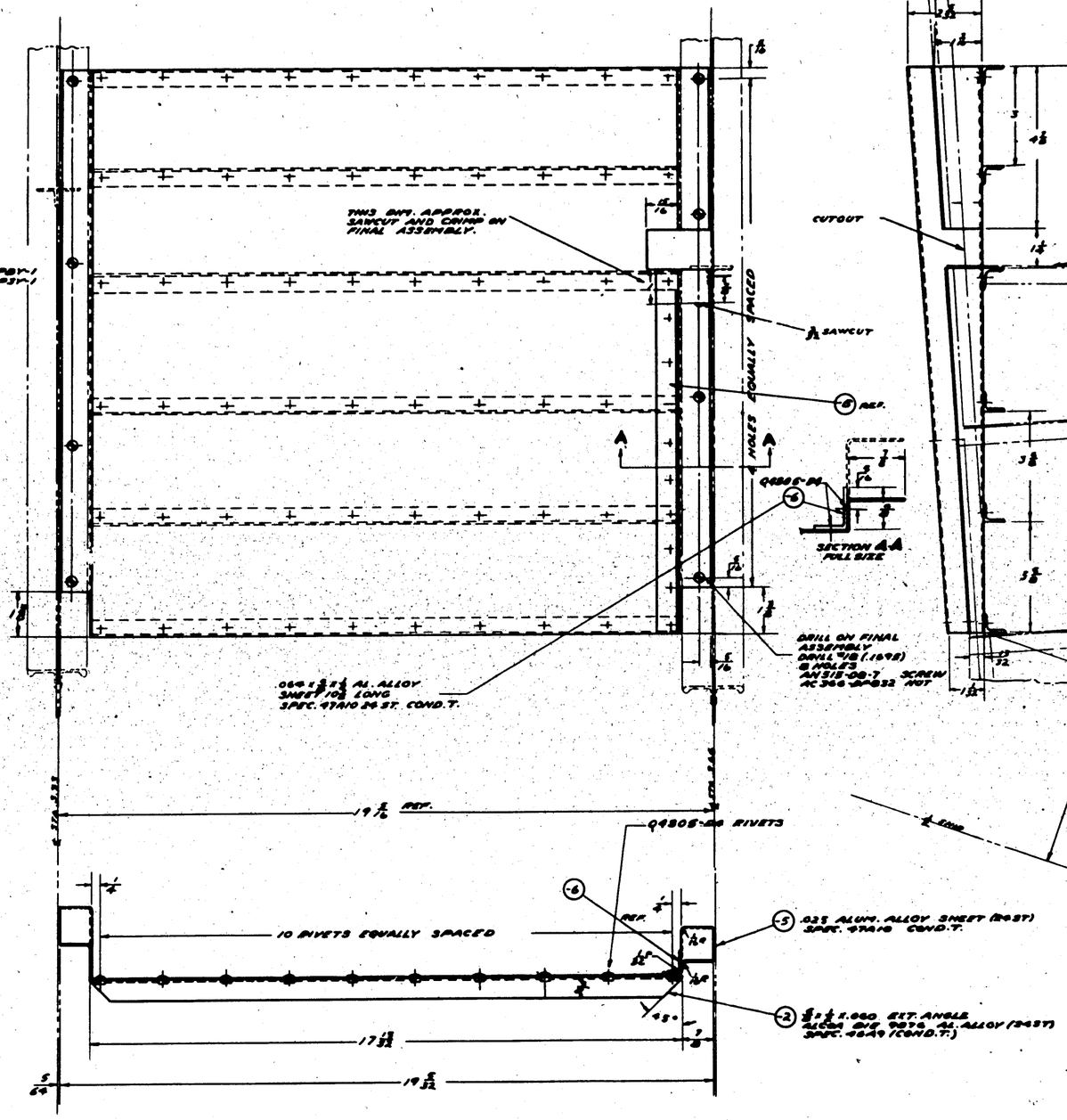
THIS DIM. APPROX. SAWCUT AND TRIM ON FINAL ASSEMBLY.
SAWCUT
REF.
4 HOLES EQUALLY SPACED
Q4B05-DD
SECTION A-A FULL SIZE
DRILL ON FINAL ASSEMBLY DRILL 7/8 (.1875) 8 HOLES AN515-08-7 SCREW AC366-DD832 NUT
.040 x 2 1/4 AL. ALLOY SHEET 10" LONG SPEC. 4TA10 24 ST. COND. T.
19 5/16 REF.
Q4B05-DD RIVETS
10 RIVETS EQUALLY SPACED
-6
-5 .025 ALUM. ALLOY SHEET (B&S) SPEC. 4TA10 COND. T.
-2 1 1/4 x 1 x .060 EXT. ANGLE ALCOA 61S, 62S, 63S, AL. ALLOY (24ST) SPEC. 4649 (COND. T.)
45°
17 11/32
19 5/32

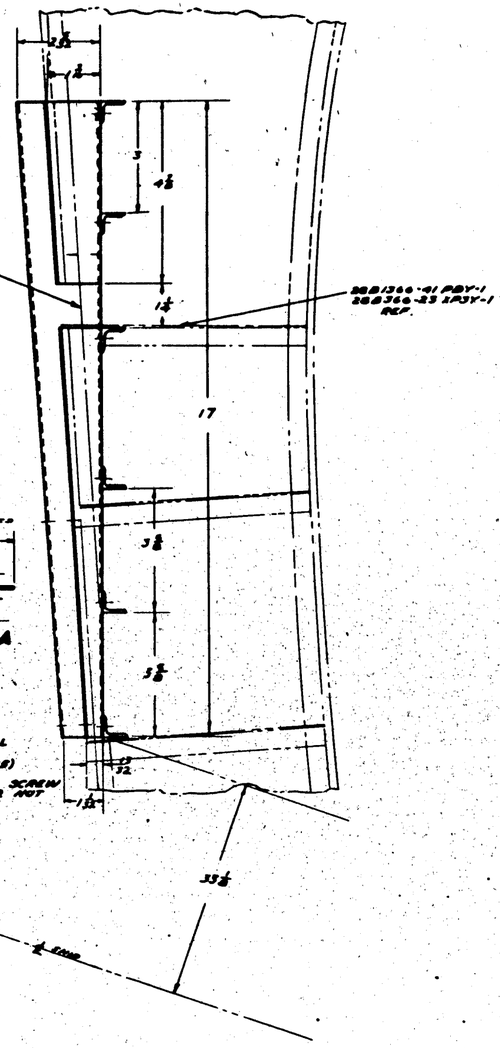

FINISH:
ΣP-2AKY ON XPBY-1 & PBY-1
ΣP-2AL ON PBY-2 & FUTURE

-6	1	1	1	1					
-5	1	1	1	1					
-2	6	6	6	6					
			PBY-1	2052100					
			PBY-3	2052100					
			PBY-2	2052100	AC366-DD832	8	8	8	
			XPBY-1	2052100	AN515-08-7	8	8	8	
			XPBY-1	2052101	Q4B05-DD				

REPLACES
REPLACED BY
APPROVED 6-27-36 DATE
CALC. BY / CHK. BY
SCALE FULL SIZE
O.H. | MODEL | WERT ASSY. | REQ. | PARTS
REQUIREMENTS PER AIRPLANE | MAT. | PARTS LIST PER ASSY.
A.D. [illegible] WELD
MATERIAL: NOTED | SPEC.: NOTED | HEAT TREAT: NONE | FINISH: NOTED
DWN: JW | DRAFT | CHECK | ENGR. | DWG.
CONSOLIDATED AIRCRAFT CORP. BUFFALO, N.Y.
NAME: FOOT REST INSTALL.-HULL RADIO OPERATORS
OPP HAND
G 28 M27

LET	ALTERATION		
	SUPPLIES & EQUIPMENT CLASSIFICATION		
E	TRACED TO DATE		
F	ADDED PBY-2 & PBY-3 REQ		
G	ADD 28B1391, Q5761-K5-1.5,	5-30-37	
	AN505-D6-7, & AN340-D6 ON	"	"
	PBY-2 & PBY-3	"	"
H	ADDED -4 AND -5	4-17-39	
J	DIMS. & NOTE ADDED	4-11-40	
K	ADDED ASS'Y -55	8-8-40	
L	AC 435-D4 TO AN 442-D4	8-11-41	
M	TO -55 ASSY ADDED 28B249-9		
	SUB ASS'Y - REM'D 28B249-9 SUB		
	ASS'YS COMPONENT PARTS FROM -55		
	WHERE ITEMS ARE LISTED SEPARATE.	7-24-41	
	BROUGHT REQ/PLANE UP TO DATE.		
N	ON FACE OF DWG., FOR -2, REPLACED		
	NOTE "3/4 x 3/4 x 1/16 PLAIN ANGLE DIE		
	# K5401 SPEC. 46A9 COND. T AL. ALLOY		
	(24ST)" WITH "-2 MATERIAL: Y-2-A27T		
	X 24." ON FACE, FOR -4, REPLACED		
	NOTE "3/4 x 3/4 x 1/16 PLAIN ANGLE DIE		
	# K5401 SPEC. 46A9 COND. T" WITH		
	"-4 MATERIAL Y-2-A27T." ON		
	FACE, FOR -5, REPLACED NOTE "3/4 x 3/4		
	x 1/16 PLAIN ANGLE DIE # K5401 SPEC.		
	46A9 COND. T" WITH "-5 MATERIAL		
	Y-2-A27T." ADDED REQ'TS FOR		
	28-5MNE, 28-5AMNE, UP TO DATE (ST. ENG. MAN)	4-23-43	
P	ON FACE, 1ST CALL OUTS -2, -4, & -5		
	ADDED AFTER K5401 "K5401, AL. AL.		
	EXTR., SPEC. QQ-A-354-T" NO WT. CHG.	10-16-43	

C.O. 4942
C.O. 7363A
E.O. 29372
E.O. 16207
E.O. 37000
E.O.A9022
PBY-5, PBY-5A, OA-10
ALL 28-5's

DRILL # 28 (.141)
AN505-D6-7 } 4 REQ.
AN340-D6

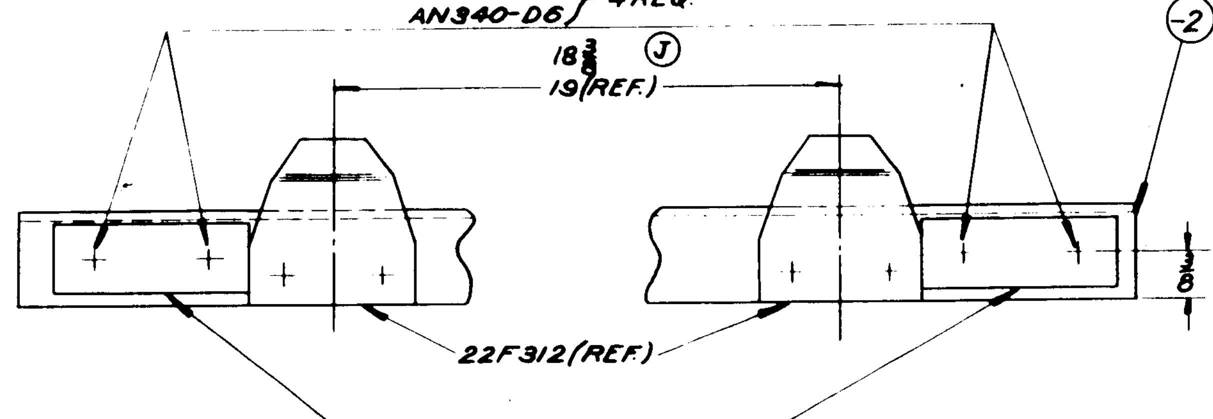

PLAN VIEW
SHOWING INSTALL. OF 28B1391
SCALE 12" = 1'-0"

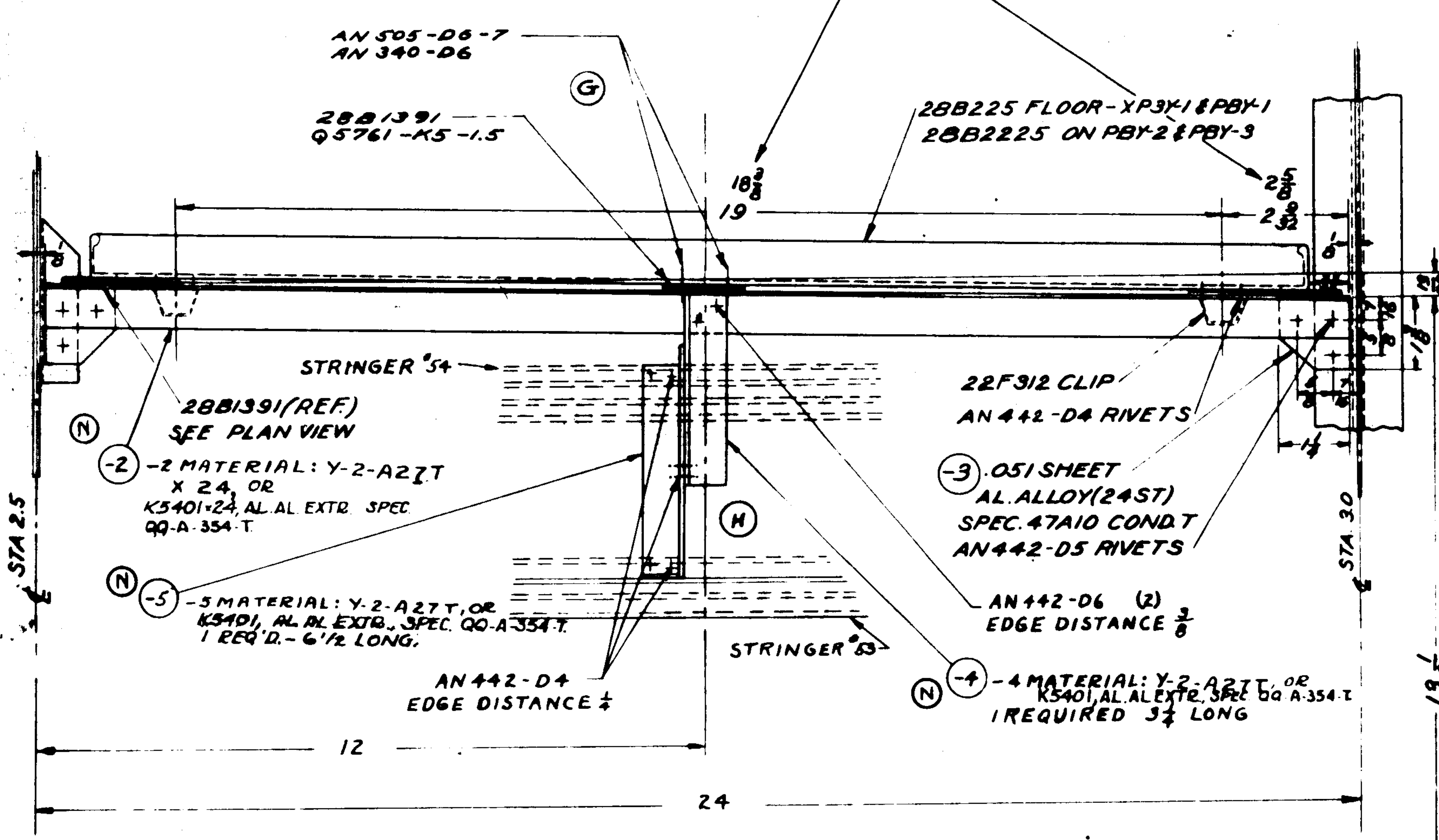

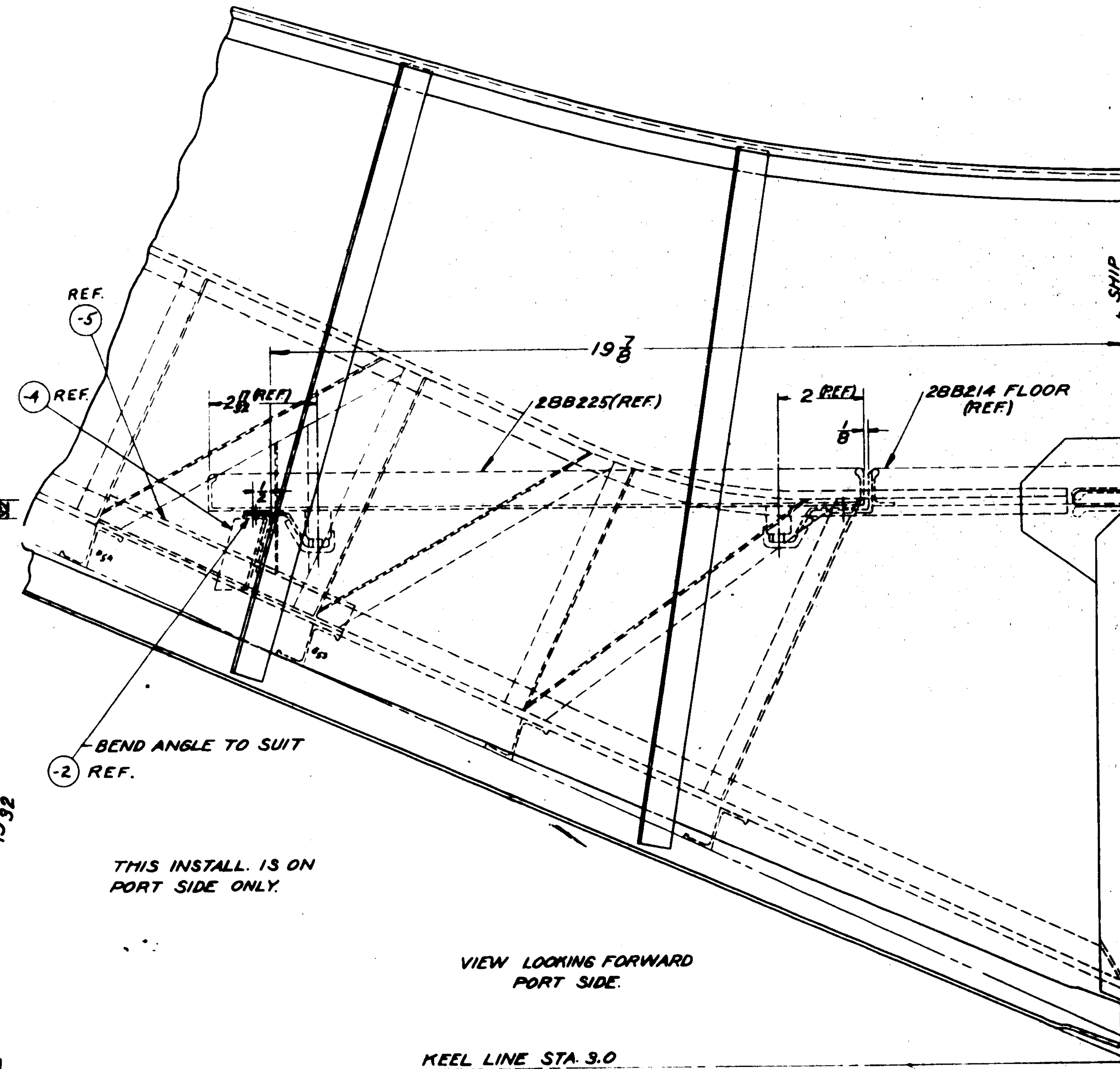

THIS INSTALL. IS ON
PORT SIDE ONLY.

VIEW LOOKING FORWARD
PORT SIDE.

KEEL LINE STA. 3.0

NOTES:-
(1) FINISH
Z-P-2GP FOR -2 & -3 ON XP3Y-1 & PBY-1
AKV FOR 22F312 CLIP " " "
Z-P-2GP FOR -2, -3, -4 & -5 ON PBY-2 & FUTURE
AL FOR 22F312 CLIP " " "
(2) -4 & -5 ON PBY-3 & PBY-4 ONLY

GP-GREEN PRIME

FINISH CODE	
Z	[redacted]
P	[redacted]
	[redacted]
	[redacted]

12 & ON
25 & ON
7 TO 24
1 TO 11

O.H.	MODEL	NEXT ASSY.	REQ.	PART NO.										
				(M) AN340-D6									6	
				AN505-D6-7									6	
				28B249-9			1						1	
				Q5761-K5-1.5			2				3		3	
				28B1391			2				3		3	
				22F312			2						2	
				28B249- -SUBASSEMBLY-										
				28B249- SUB ASSEM.									1	
-55	28-5AMN	28B5100	1	28B5225									1	
-55	28-5AMC	28B5100	1	AN442-D6										
-55	PBY-5B	28B5100	1	28B249-5							1			
-55	PBY-5A	28B5100	1	28B249-4							1		1	
-55	28-5MN	28B5100	1	Q5761-K5-1.5	2		2		3		3			
-55	28-5MC	28B5100	1	AN340-D6	4		4		6		6			
-55	28-5MA	28B5100	1	AN505-D6-7	4		4		6		6			
-55	28-5ME	28B5100	1	AN442-D5										
-55	PBY-5	28B5100	1	AN442-D4										
	PBY-5	28B5100	1	28B2225					1		1			
	28-5ME	28B2100	1	28B225	1		1							
	PBY-3, 4	28B2100		28B1391	2		2		2		3			
	PBY-2	28B2100		22F312	2		2		2		2			
	PBY-1	28B1000		-3	2		2		2		2		2	
	XP3Y-1	28B001		-2	1		1		1		1			

REQUIREMENTS PER AIRPLANE | MAT. | PARTS LIST

REPLACES		Y.A.W. 4-26-37 APPROVED	DATE		
REPLACED BY		3.00 CALC. WT.	ACT. WT.		
LIMIT ON DIMENSIONS UNLESS OTHERWISE SPECIFIED	± 1/32	SCALE 6" & 12" = 1'-0"			
[redacted]		AC			
		NAVY NOTED	NOTED	NOTED	SEE NOTE
		MATERIAL	SPEC.	HEAT TREAT	FINISH
		CONSOLIDATED AIRCRAFT CORP. BUFFALO, N.Y.	NAME: FLOOR INSTALLATION HULL - NAVIGATOR'S		
		STAMP PT. No. WHERE SHOWN			

A.D. DRFT | CHECK | ENGR.
DWG. NO. G [illegible]

SUPPLIES & EQUIPMENT CLASSIFICATION			
LET	ALTERATION	DATE	BY
AP	TRACED UP TO DATE	6-6-37	
AG	ADDED NOTES	8-1-38	

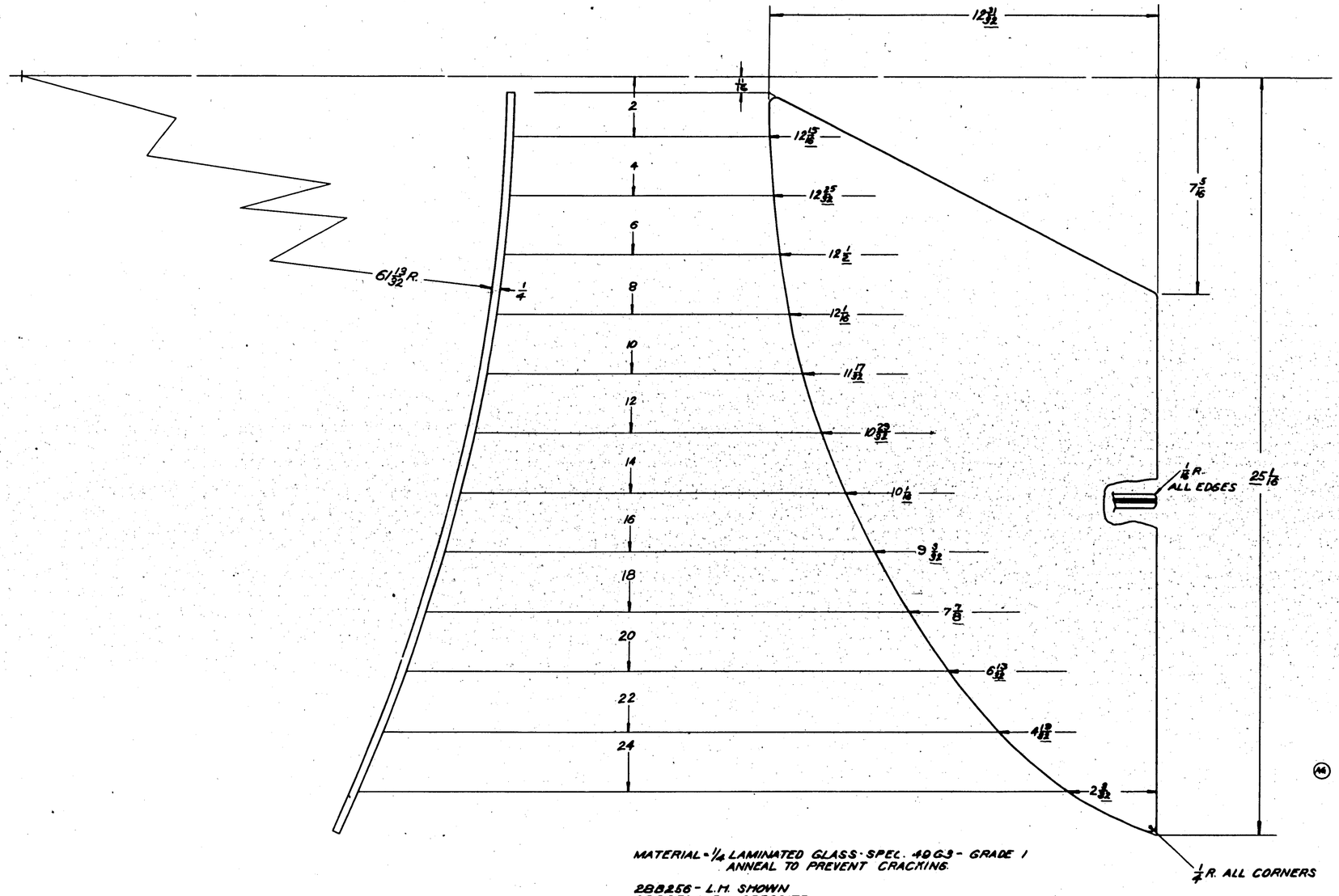

MATERIAL = 1/4 LAMINATED GLASS - SPEC. 40G3 - GRADE 1
ANNEAL TO PREVENT CRACKING.

2BB256 - L.H. SHOWN
2BB256-1 R.H. OPPOSITE

LIMITS ON DIMENSIONS :—
±1/64 ON WIDTH & LENGTH
±1/16 ON BENDS
±1/64 ON THICKNESS

(M) BONDING MATERIAL TO BE VINYL RESIN BINDER ("MITEST" OR EQUIV.)

-R	PBY-5M8	2BB2024	1 EA	
-L	PBY-5M8	2BB2014	1 EA	
-1	PBY-5-4	2BB2024		
	PBY-5-4	2BB2024		
-1	PBY-2	2BB2024		
	PBY-2	2BB2024		
-1	PBY-1	2BB004		
	PBY-1	2BB004		
-1	XPBY-1	2BB004		
	XPBY-1	2BB004		

REPLACES
REPLACED BY
LIMIT ON DIMENSIONS UNLESS ± OTHERWISE STATED

APPROVED [redacted] Sep 37 DATE
4.10 CALC.WT. ACT.WT.
SCALE 6"-1'-0"
NAVY NOTED
MATERIAL

O.N.	MODEL	NEXT ASSY.	REQ.	PART NO.
REQUIREMENTS PER AIRPLANE			MAT.	PARTS LIST PER ASSY.
NOTED				
SPEC.	HEAT TREAT		FINISH	

CONSOLIDATED AIRCRAFT CORP. BUFFALO, N.Y.
STAMP PT. No. WHERE SHOWN

NAME GLASS-HULL-PILOTS ENCLOSURE REAR-TOP

DRAWN C.B.Wood 5-4-37
Secured 5-4-37 Miller
DRAFT CHECK ENGR ENGR

OPP. HAND 2BB256-1
DWG G 2BB256
SIZE

LET	ALTERATION	DATE	BY
E	TRACED. NO WT. CHG.	12-4-41	MARY

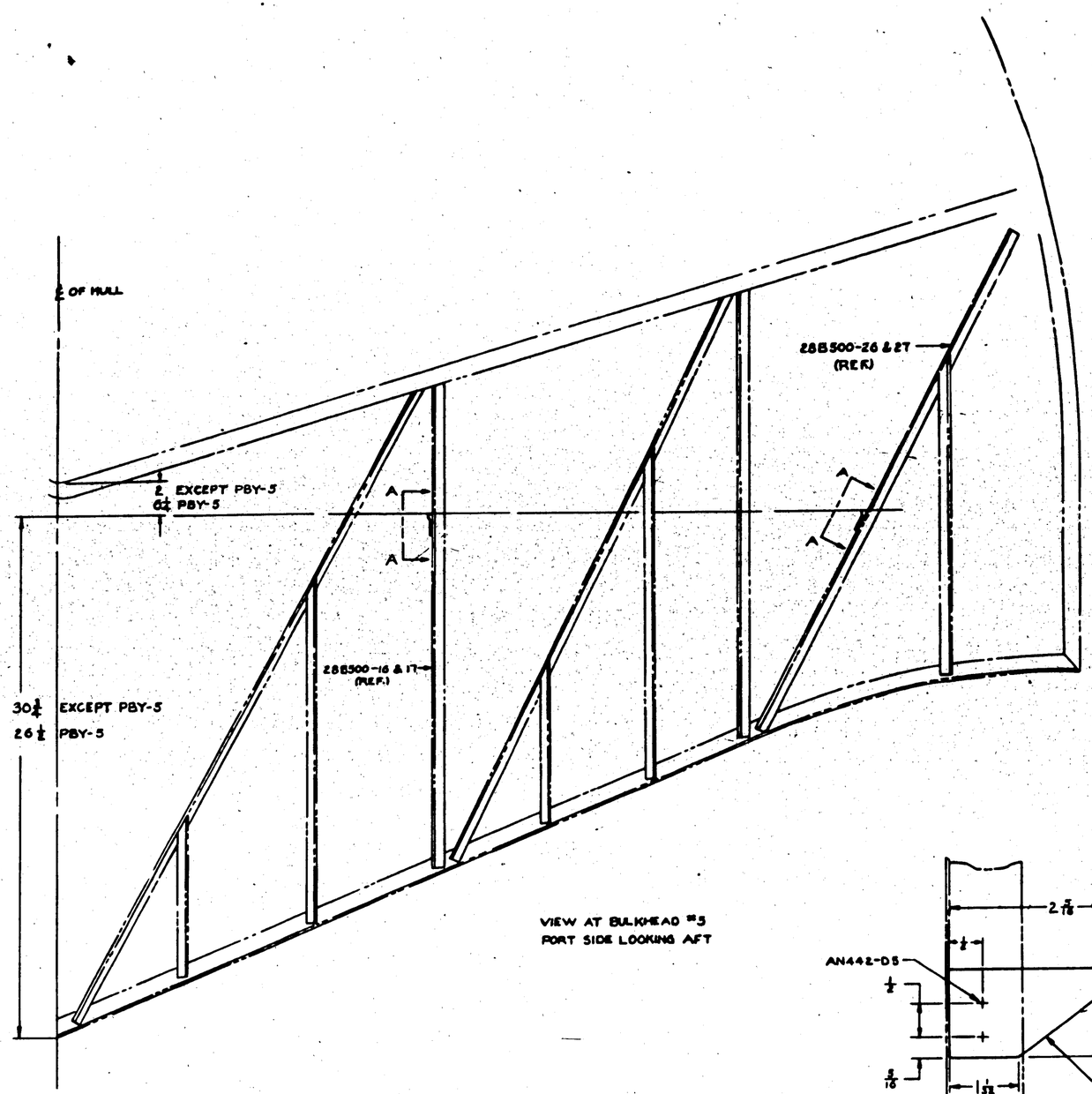

VIEW AT BULKHEAD #5
PORT SIDE LOOKING AFT

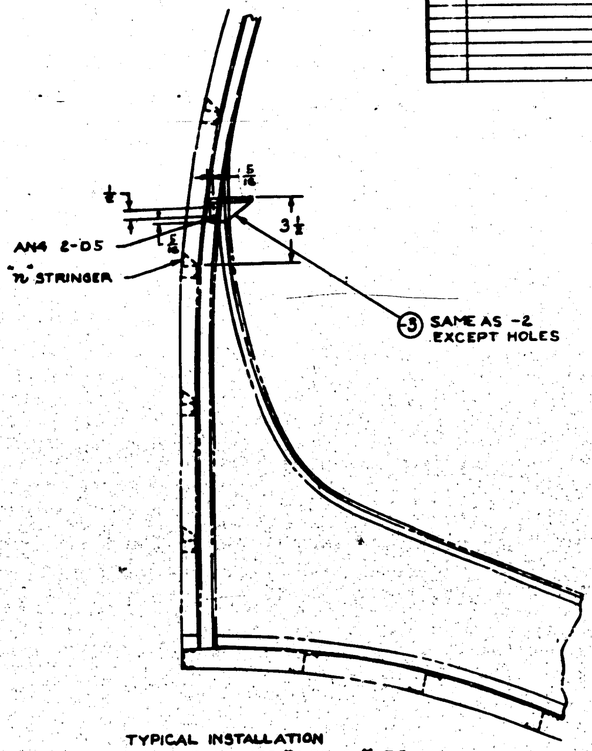

TYPICAL INSTALLATION
AT BELT FRAMES #4.25 & #4.75
PORT SIDE - LOOKING FORWARD

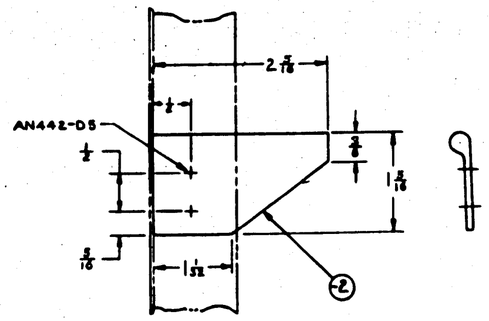

SECTION A-A
SCALE 12" = 1'-0"

FINISH CODE	
Z	ANODIC TREATMENT
P	PR 7 PRIMER
AP	ALUMINIZED PRIMER
C	CADMIUM PLATE
GP	GREEN PRIME

C #91876
C #70496

PART No	STOCK	MATERIAL	SPEC.	LH REQ.	RH REQ.	LH REQ.	RH REQ.	LH REQ.	RH REQ.	LH REQ.	RH REQ.
	PARTS LIST PER ASSY.			-0				-4	-5		
-3	K-778 X 5/16	AL.AL.	46A8-T	2							
-2	K-778 X 5/16	AL.AL.	46A8-T	2							

MODEL	NEXT ASSY.	REQ.
PBY-5A	288000	
PBY-5	288000	
PBY-5MN	288000	
PBY-5MK	288000	
PBY-5MG	288000	
PBY-5MA	288000	
PBY-5	288000	
PBY-4	288000	
PBY-3	288000	
PBY-2	288000	
PBY-1	288000	
XP3Y-1	288001	

REQUIREMENTS PER AIRPLANE

AN442-D5

DRAWN BY	288343 — 10-18-34 .100
CHECKED BY	.100
LAST NO. DRAWING VALUE	SCALE 1" = 1'-0" & NOTED
STAMP PART NUMBER WHERE SHOWN	

AC		ISSUED	APPROVED		L.C.W.
NAVY NONE	Z-P-GP	10-18-34	9-6-37	T.R.A.	12-31-38
HEAT TREAT	FINISH	DRAFT	CHECK	STRUCT	MAT	ENGR	ENG

NAME
BLOCKS INSTALL.-HULL-LEVELING

CONSOLIDATED AIRCRAFT CORP. SAN DIEGO, CALIF.

C.P. HAND NONE

DWG G | 288343

Alice Murray

R

LET	ALTERATION	DATE		
CQ	Traced & Revised			
CR	Added -537 & -551R for -5?? Ass'y and [illegible]			
CS	-552,-553 & -554 Added in Place of -20-81[illegible] Added -556			
CT	Changed -35-36-52-53 From .035 To .040 [illegible]			
CU	Added -90,-91,-92,-93,-94 View "C" View "D" & [illegible] Note. Replacing -33 & -92			
CV	Changed -92 to -90 in Shp. "C5" in Alteration Block			E.O.15008
CW	Added -382 to -388 Incl. & View Showing All Parts Not Used on -0 Assy. Replacing View "D" & View [illegible]			
CX	Split Sht. #552 L&R Vertically at 23" Aft. of Sta. #6 & 2 Sht. -551 L&R Assigned to Fwd. Part. Sht. #554 Extended to Sta. #7 & Sht. #553 Cut at Sta. #7. Added Part #559 L&R.	4-4-40		E.O.17735
CY	-[illegible] was -[illegible] on face of dwg	4-11-40		
CZ	Chg'd -29 from SO to ST. -556 & -559 from .032 to .030	4-16-40		
DA	24ST Cond. was 2450			E.O.23603
DB	-35 & -52 .040 Dural 2450 was .040 Dural 24ST.	2-20-4?		
DC	Chgd Spec of -91L&R From SO to ST	2-20-42		
DD	-487L&R & -486L&R Replaced -17L&R (for -551 Assy)(AN)			
DE	In BM Chgd -47L to -47L&R			
DF	Added Limits to -25,-26L,-26R; -51 Neg. Wt. Chg.	12-30-?		EA 864279 EAC 23-15
DG	Removed Limits on -25-26L&R; -51 No Wt. Chg.			E.O.A98250

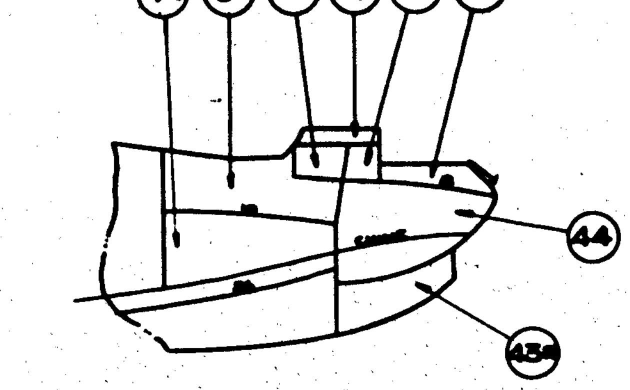

VIEW OF STARBOARD BOW PLATING ARRANGEMENT

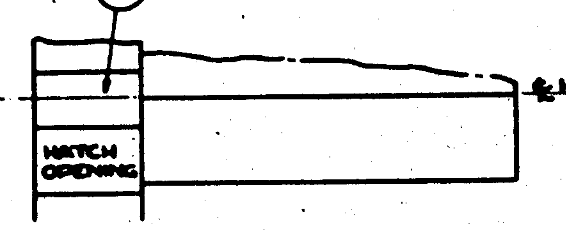

PLAN SHOWING-81

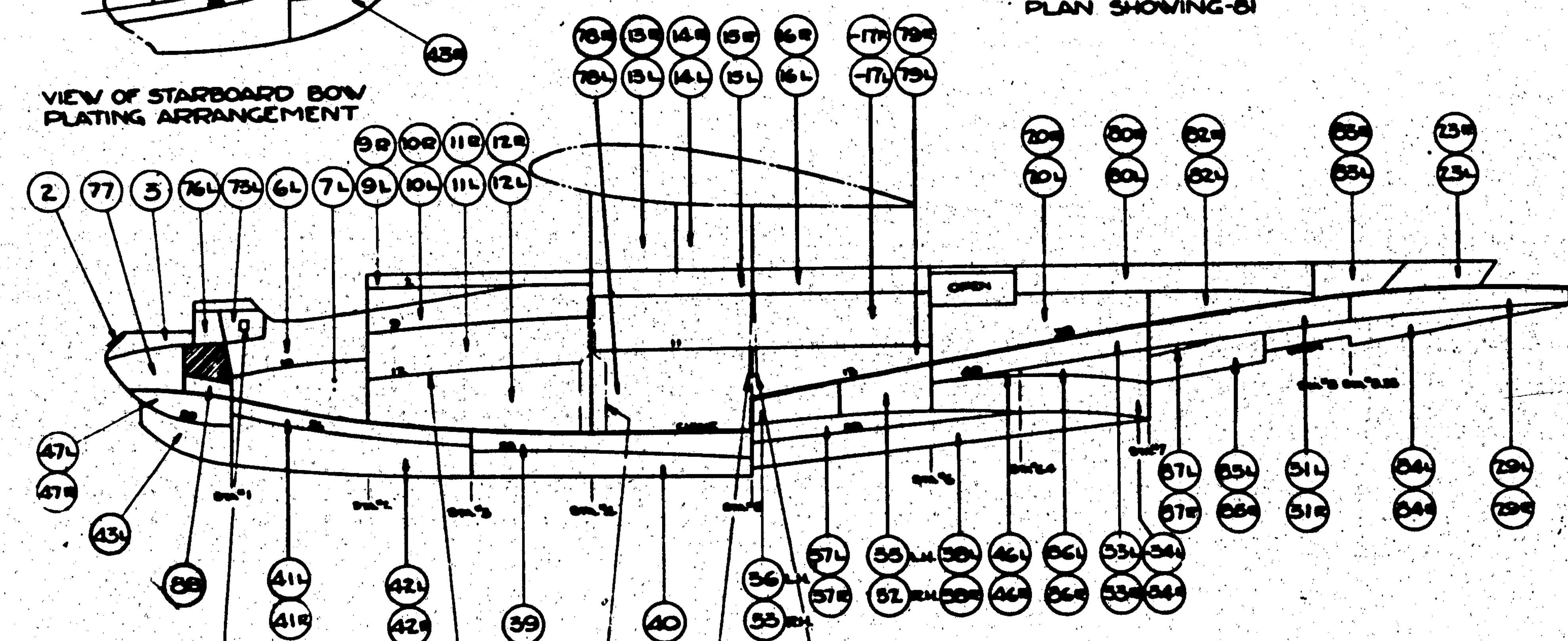

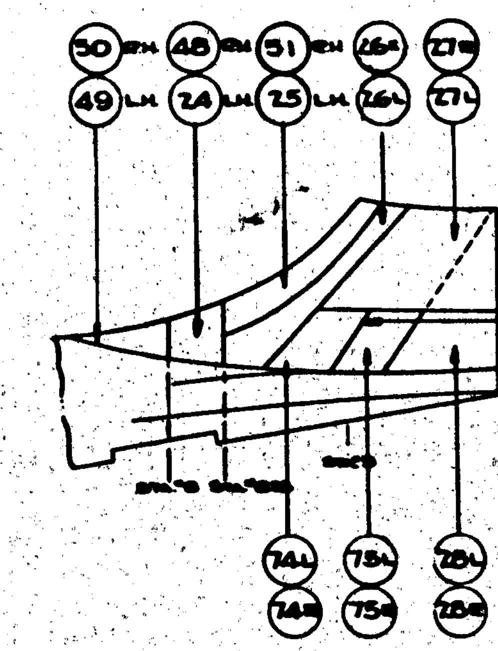

SINGLE ROW OF 04308-05 RIVETS SPACED 7/8 C.TO C. 3/4 OVERLAP OF PLATING

ALL OTHER FIN PLATING SPLICES TO HAVE DOUBLE ROWS OF 04308-04, SPACED STAGGERED 7/8 C.TO C.

03502 NAME PLATE 04305-05 RIVETS LOCATE APPROX. AS SHOWN.

2881428 (REF.)

288065 (REF.)

2881359 & -1 (REF.)

-O ASS'Y.

NUMBER DESIGNATIONS ALONG LONGITUDINAL SEAMS INDICATE STRINGERS AS SHOWN ON 2881007

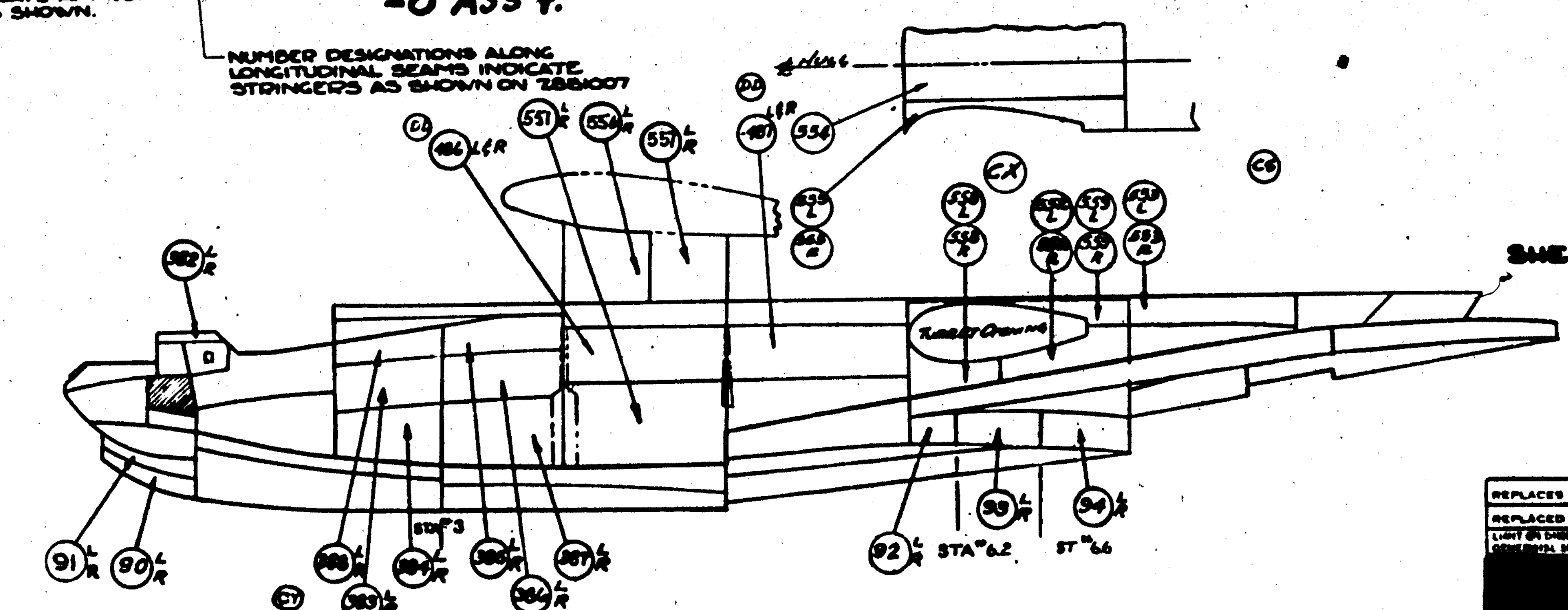

VIEW SHOWING LOCATION OF PARTS NOT USED ON -O ASSY. (SEE B.M. ON SHEET #4)

SHEET #3 OF 4 SHEETS

REQ. ON SHEET #4 (-487L through -551R)

Part No.		Req'd.	Sheet Size	
-487L	-487R	1 EA	.030X36X86 *	
-486L	-486R	1 EA	.030X36X75 *	
-559L	-559R		.030X30X70 *	
-558L	-558R		.030X48X48 *	
-388L	-388R		.030X36X50	
-387L	-387R		.030X31X60	
-386L	-386R		.030X31X60	
-385L	-385R		.030X36X60	
-384L	-384R		.030X31X50	
-383L	-383R		.030X31X50	
-382L	-382R		.030X37X24	
-94L	-94R		.040X26X53	
-93L	-93R		.040X26X58	
-92L	-92R		.040X27X36	
-91L	-91R		.057X17X60	
-90L	-90R		.057X26X68	
-557L	-557R		.032X42X50	
-556L	-556R		.032X41X56	
-555L	-555R		.030X30X48 *	
-554			.030X34X115	
-553L	-553R		.030X42X85 *	
-552L	-552R		.030X48X70 *	
-551L	-551R		.035X42X70 *	
-88		1	.035X26X28	
-87L	-87R	1 Ea.	From Cutoffs 7X24	
-86L	-86R	1 Ea.	.035X48X90	2 From Sheet
-85L	-85R	1 Ea.	.035X46X124	2 From Sheet
-84L	-84R	1 Ea.	.035X48X178	2 From Sheet
-83L	-83R	1 Ea.	.030X48X96 *	2 From Sheet
-82L	-82R	1 Ea.	From -20 Cutoff *	2 From Sheet
-81		1	.030X32X48	For -0 Assem.
-80L	-80R	1 Ea.	.030X42X138 *	For -0 Assem.
-79L	-79R	1 Ea.	.030X36X88 *	
-78L	-78R	1 Ea.	.030X42X78 *	2 From Sheet
-77		1	.030X48X48	
-76L	-76R	1 Ea.	.030X18X76	2 From Sheet
-75L	-75R	1 Ea.	.030X20X86	2 From Sheet
-74L	-74R	1 Ea.	.030X20X86	2 From Sheet
-73L	-73R	1 Ea.	.030X24X86	2 From Sheet
-53		1	.040X22X48	2450
-52		1	.040X30X48	2450
-51		1	.030X24X84	2450
-50		1	.030X42X56	2450
-49		1		1 of Ea. From Sheet
-48		1	.030X36X44	
-47L	-47R	1 EA	.057X48X55	2450
-46L	-46R	1 Ea.	.035X18X58	2 From Sheet
-45			.030X24X44	
-44		1	.030X42X68	
-43L	-43R	1 Ea.	.057X48X88	2 From Sheet
-42L	-42R	1 Ea.	.057X48X117	
-41L	-41R	1 Ea.	.057X58X117	
-40			.057X58X134	
-39		2	.057X58X134	
-38L	-38R	1 Ea.	.040X51X188	
-37L	-37R	1 Ea.	.040X17X108	
-36		1	.040X27X81	2460
-35			.040X30X48	2450
-34L	-34R	1 Ea.	.040X36X120	
-33L	-33R	1 Ea.	.035X53X110	2 From Sheet
-31L	-31R	1 Ea.	.035X16½X104	
-29L	-29R	1 Ea.	.035X16X110	
-28L	-28R	1 Ea.	.030X28X30	
-27L	-27R	1 Ea.	.030X42X68	
-26L	-26R	1 Ea.	.030X81X108	
-25		1	.030X24X84	2460
-24		1	.030X36X44	
-23L	-23R	1 Ea.	.030X36X60 *	
-20L	-20R	1 Ea.	.030X48X118 *	Use Cut-Off For -82
-17L	-17R	1 EA	.030X36X159 *	
-16L	-16R	1 EA	.030X42X88 *	
-15L	-15R	1 Ea.	.030X42X78 *	
-14L	-14R	1 Ea.	.030X42X89	
-13L	-13R	1 Ea.	.030X41X56	
-12L	-12R	1 Ea.	.030X31X108	
-11L	-11R	1 Ea.	.030X31X108	
-10L	-10R	1 Ea.	.030X36X108	
-9L	-9R	1 Ea.	.030X31X108 *	
-7L	-7R	1 Ea.	.030X38X66	
-6L	-6R	1 Ea.	.030X36X78	
-4		1	.030X37X45	
-3		1	.030X16X44	
-2		1	.030X12X17	
Part No.		Req'd.	Sheet Size	

HULL PLATING

* INDICATES THAT RIGHT & LEFT HAND PARTS ARE IDENTICAL EXCEPT FOR PAINT.

	PBY-5B	2886000
	PBY-5A	[illegible]
	PBY-5	
	PBY-4	

REPLACES DETAILS ON SHEET #1

REPLACED BY

LIMITS ON DIMENSIONS UNLESS OTHERWISE SPECIFIED

[redacted]

S.W.M. APPROVED DATE

CALC. WT. ACT. WT.

SCALE

L.H. MODEL NEXT ASSY REQ. STD PARTS REQ. PART No.

REQUIREMENTS PER AIRPLANE MAT. PARTS LIST PER ASSY

1-7-36

NAVY: See Sheet #1 | See Sheet #1 | See Sheet #1 | See Sheet #1

MATERIAL SPEC HEAT TREAT FINISH

DRAFT CHECK

CONSOLIDATED AIRCRAFT CORP. BUFFALO N.Y.

NAME: STRUCTURE ASSY. - HULL INCLUDING PLATING

G 28810

SUPPLIES & EQUIPMENT CLASSIFICATIONS			
LIST	ALTERATION	DATE	BY
F	TRACED UP TO DATE	7-7-43	
G	SHT. REF CHG. RT. -8 AT 36"	3-23-51	
H	-13 WAS CONST. 'S' WAS COND.A	1-31-38	ABMO
I	SH-13 DIM 3 5/8 & 4 5/8 WERE 3 1/8 & 4 1/8	8-1-38	Boeing
K	-13 WAS COND. 'A'		
	ADDED -55 ASSEM.	11-9-39	G.W.
	28B1068-55 REPLACES 28B1068		
K	-8-9 WAS COND.T	1-8-40	Boeing
L	REMOVED BOTTOM RIVET ATTACHING 28B1100-22 & 28B1552		
	NEG. MIL CHG.	4-2-42	Schmidt
M	SEE FACE, SECTION D-D(REV) 3/8 R WAS 1/16 R		
	(NO WT. CHG.)	6-25-43	Boeing
N	REMOVED 5/8 R IN SECT. D-D		
	ADDED BY "M" CHG. NO WT. CHG.	9-24-43	Boeing

C.O. 39875

SECTION E-E

NOTE: 90° AT SECTION BB

SECTION B-B

NOTE: DO NOT PAINT INSIDE OF FITTING

ON -2 & -4 BREAK CORNERS TO CLEAR WELD FILLET ON 28B1068

C'SINK FLUSH ON TOP AN425D6 12 REQ.

28B1100 (REF.) -71

28B1552 (REF.)

28B1100 REF. NO'S. -75 -13 -22 -71 -21 -20

SECTION C-C

Q5761-K5-1.5 28B1391 (1 OF EACH REQ'D.)

15 3/4 PBY-2 & -3
15 11/16 PBY-1
10 1/4

Q616-D6-2 SPACERS 8 REQ.

TRIM ANGLE TO CLEAR KEELSON

TRIM OUTSTANDING LEGS 30°

.040 GUSSET

.091 GUSSET

-13 -24 28B1066 (REF.)

Q616-D6-3 SPACERS -5 REQ.

.064 GUSSET

STAGGER RIVETS BETWEEN THOSE ON BULKHEAD STA. 1

28B1101 (REF.) -23 -21 -20

28B1483 (REF.)

TO ACTUAL HULL KEEL BASE LINE (REF.)

DRILL #28 (.141) AN505D6-8 } 2 REQ. AN340-D6

28B1391 (REF.)

SECTION X-X

REF. 28B1066 -9 -10 (13)

PORT STARBOARD

SECTION A-A

SECTION DD

LIST OF DASH NO'S AND MATERIAL FROM WHICH THEY ARE MADE.

1 1/2 x 3/8 x 3/32 BULB ANGLE DIE #K778 SPEC. 4349 COND.T -2-3-4-5-6-7

3/4 x 3/4 x 1/16 PLAIN ANGLE DIE #5401 SPEC. 4349 COND.T -10-11

AL. ALLOY SHEET SPEC. 4YA10 COND.T -12-13-14-15

3/4 x 3/4 x 1/16 PLAIN ANGLE DIE #3901 SPEC. 4349 COND.A-2450. -8-9

RIVET NOTES:
ALL RIVETS TO BE AN426D6 EXCEPT AS NOTED.
ALL RIVETS NOT LOCATED BY DIMENSIONS ARE TO BE EQUALLY SPACED AS SHOWN.

FINISH:
FINISH ALL AL. ALLOY PARTS Z-P BEFORE ASSEMBLY TO 28B1068
FINISH ASSEMBLY PER GP ON PBY-1
GP ON PBY-2A FUTURE

GP-GREEN PRIME

FINISH CODE	
1	[redacted]
2	[redacted]
3	[redacted]
AP	[redacted]
C	[redacted]

NOTE~ HEAT-TREAT ALL COND. A PARTS PER SPEC. 5R-53 (COND 'T')

| | | |

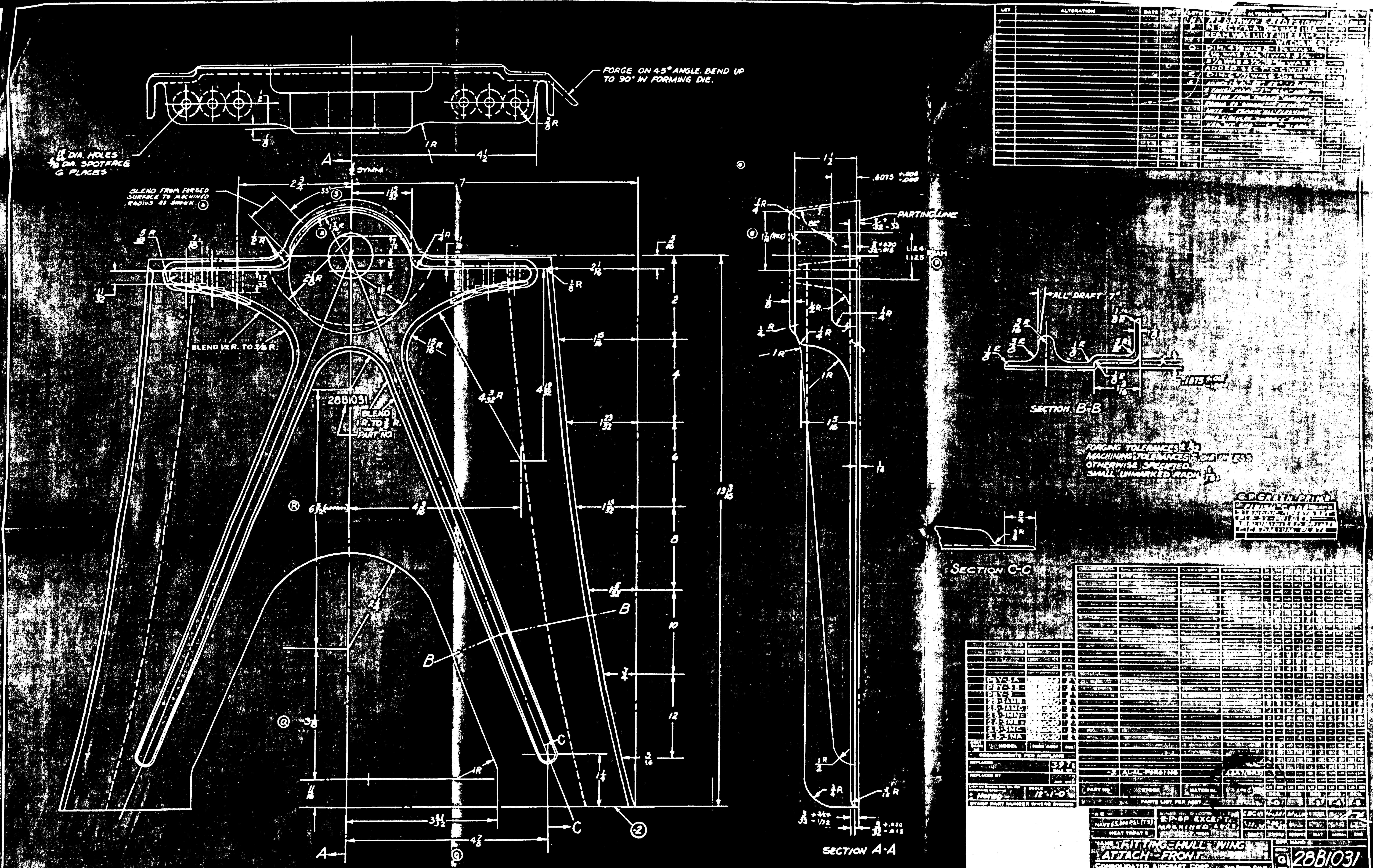

FORGE ON 45° ANGLE. BEND UP TO 90° IN FORMING DIE.
DIA. HOLES DIA. SPOTFACE 6 PLACES
BLEND FROM FORGED SURFACE TO MACHINED RADIUS AS SHOWN
BLEND 1/2 R. TO 3/8 R.
28B1031
BLEND 1R. TO 3/8 R. PART NO.
PARTING LINE
REAM
ALL DRAFT 7°
SECTION B-B
SECTION A-A
SECTION C-C
FORGING TOLERANCES ± 1/32
MACHINING TOLERANCES ± .016 UNLESS OTHERWISE SPECIFIED.
SMALL UNMARKED RADII 1/16
G.P. GREEN PRIME
ALTERATION
RE-DRAWN & RE-DESIGNED
REAM WAS 1.110
ADDED SECT. C-C
-2 ALAL FORGING
PART NO. STOCK MATERIAL SPEC.
PARTS LIST PER ASSY.
REQUIREMENTS PER AIRPLANE
MODEL
REPLACED
REPLACED BY
SCALE 12"-1-0
STAMP PART NUMBER WHERE SHOWN
HEAT TREAT
E.P. & P. EXCEPT MACHINED LUGS
NAME FITTING-HULL-WING ATTACH-FRONT
CONSOLIDATED AIRCRAFT CORP.
G 28B1031

R
28B1031

SUPPLIES & EQUIPMENT CLASSIFICATION					
LET	ALTERATION	X-Ref	DATE	
L	TABS (P)			
M	ADDED (3 HOLES) TO TAB DIM M			
	SECTION A-A			
N	CHG'D 2 1/2 & 3 HRT TREAT AND TO			
	ADDED STAMPING FROM ABOVE TO PART NO.			
	HEAT TREAT FROM 6 FOR 5 TO			
	ADDED 3/16 R. MT. CHG NOS.			
P	ADDED MARK "A"			
	CHG'D 3 DIM. C & F TO 12.25			
	& 3 NO. MOVED PART NO.			
	MT. CHG. NOS.			
Q	CHG AL-5 MAT'L FROM AQ-11 TO 14ST-16 RT-GRS WAS 76 AT-GR 5 HEAT TREAT FROM 44,000 # TO 65,000 #			
R	CHG DIM. 12.6 TO 12.2 AS SHOWN			
	LIMIT ON FORGING DIM. 12.2			
	ADDED DIM. & CHANGED ARRANGEMENT OF			
	DRAFT ANGLE OF SECTIONS			
	D.O.T. TRACER DRILL			
	UNLESS OTHERWISE NOTED			
S	CHG'D # NOTE 3			
	ADDED LIMIT ON FORGING DIM.			

ED. 2/1489

(FORGING NOT APP.)

SECTION J-J

DRILL 5/32 -12 HOLES

5 SPACES @ 15/16

REAM .875-.875 Ⓢ

PART NO.

28B1034

SECTION C-C

FULL RADIUS

VIEW AT B-B

.085-.095 SLOT

SECTION A-A

DIM. SHOWN ARE TO TOP OF DRAFT ANGLE ON SECTIONS C-C, E-E & D-D, I & E

VIEW AT H-H

DRILL 5/32 SPOTFACE 1/4 DIA. 6 HOLES

-2 FORGING AS SHOWN

-3 FORGING-OPPOSITE HAND

Ⓝ ALUM. ALLOY FORGING SPEC. 4GAT-GR.5 (14ST) H.T. - 65,000 #/in² T.S.

SECTION D-D

VIEW AT E-E

CHAMFER 45° 1/16

VIEW AT F-F

SECTION E-E

Ⓡ LIMIT ON FORGING DIM. .02

SMALL UNMARKED RADII 1/16

DRAFT ANGLE 2°

FINISH ALL OVER EXCEPT MACHINED SURFACES OF LUGS AND HOLES ACCEPT AS OTHERWISE NOTED ON LUGS, ON BOSS & PICTURE

COPY No. 2

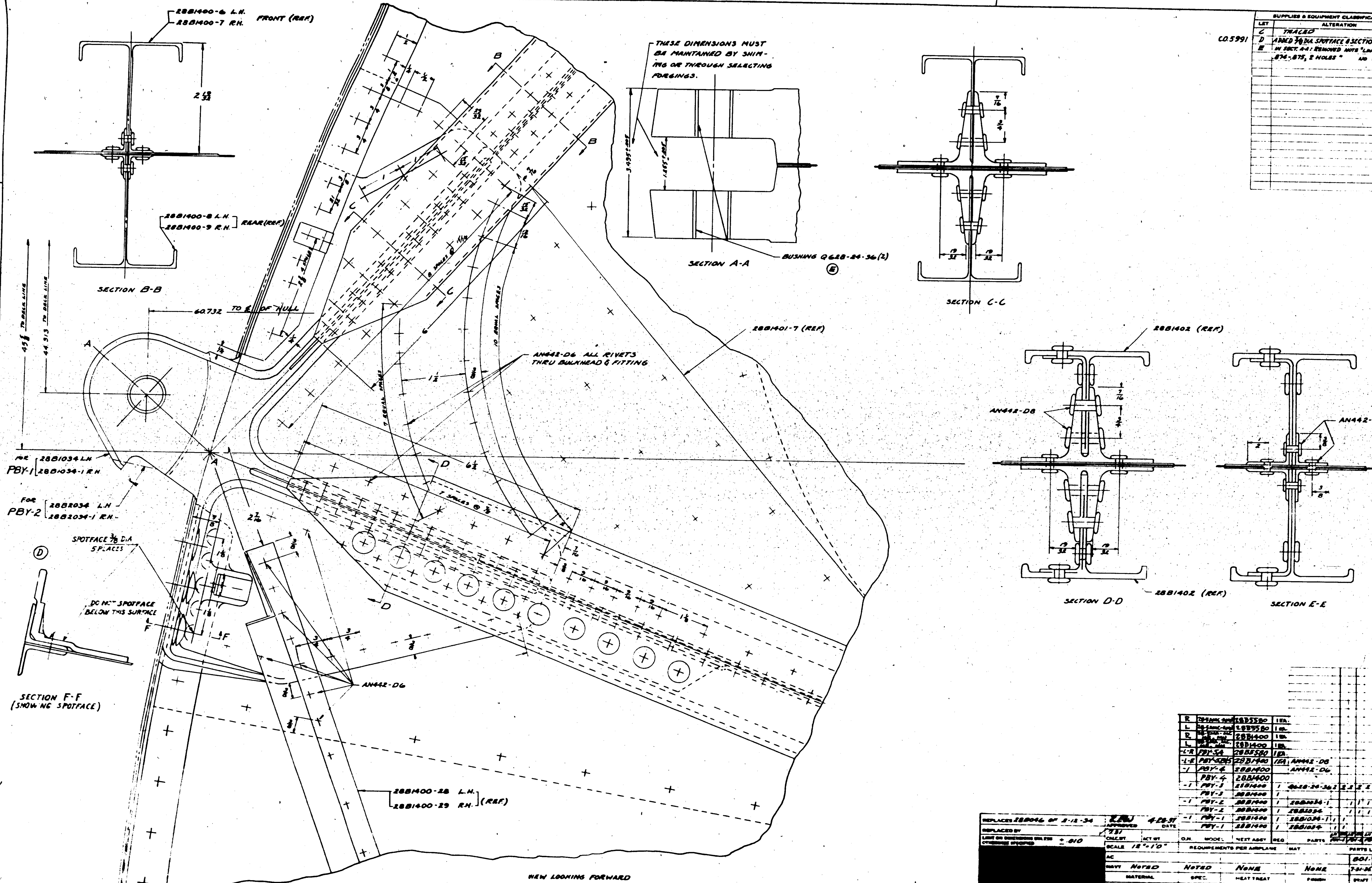

LET	ALTERATION	DATE	BY
C	TRACED	4-28-37	
D	ADDED 3/8 DIA. SPOTFACE & SECTION F-F	1-13-38	ADAMS
E	IN SECT. A-A: REMOVED NOTE "LINE REAM .874-.875, 2 HOLES" NO WT. CHG.	4-9-43	

SUPPLIES & EQUIPMENT CLASSIFICATION

C.O. 5991

O.H.	MODEL	NEXT ASSY	REQ	PARTS	
R	28-5AMC-AND	28B5580	1EA.		
L	28-5AMC-AND	28B5580	1EA.		
R	28-5AMC-AC	28B1400	1EA.		
L	28-5AMC-AC	28B1400	1EA.		
-L-R	PBY-5A	28B5580	1EA.		
-L-R	PBY-5&6	28B1400	1EA.	AN442-D8	
-1	PBY-4	28B1400		AN442-D6	
	PBY-4	28B1400			
-1	PBY-3	28B1400	1	Q628-24-36	2 2 2 2 2 2 2
	PBY-3	28B1400	1		
-1	PBY-2	28B1400	1	28B2034-1	1 1 1 1 1
	PBY-2	28B1400	1	28B2034	1 1 1 1 1
-1	PBY-1	28B1400	1	28B1034-1	1 1
	PBY-1	28B1400	1	28B1034	1 1

REQUIREMENTS PER AIRPLANE — MAT — PARTS LIST PER ASSY

REPLACES 28B046 OF 2-12-34
REPLACED BY
LIMIT ON DIMENSIONS UNLESS OTHERWISE SPECIFIED ± .010

[redacted]

APPROVED — DATE 4-28-37
CALC. WT — ACT WT
SCALE 12" = 1'0"
AC
NAVY NOTED — NOTED — NONE — NONE
MATERIAL — SPEC. — HEAT TREAT — FINISH
801 — 7-31-36 — 5-20-37
DRAFT — CHECK — EXAM — ENG.

CONSOLIDATED AIRCRAFT CORP.
BUFFALO, N.Y.

NAME: FITTING INSTALLATION - HULL WING STRUT-BULKHEAD # 4

OPP HAND 28B1046-1

G 28B1046

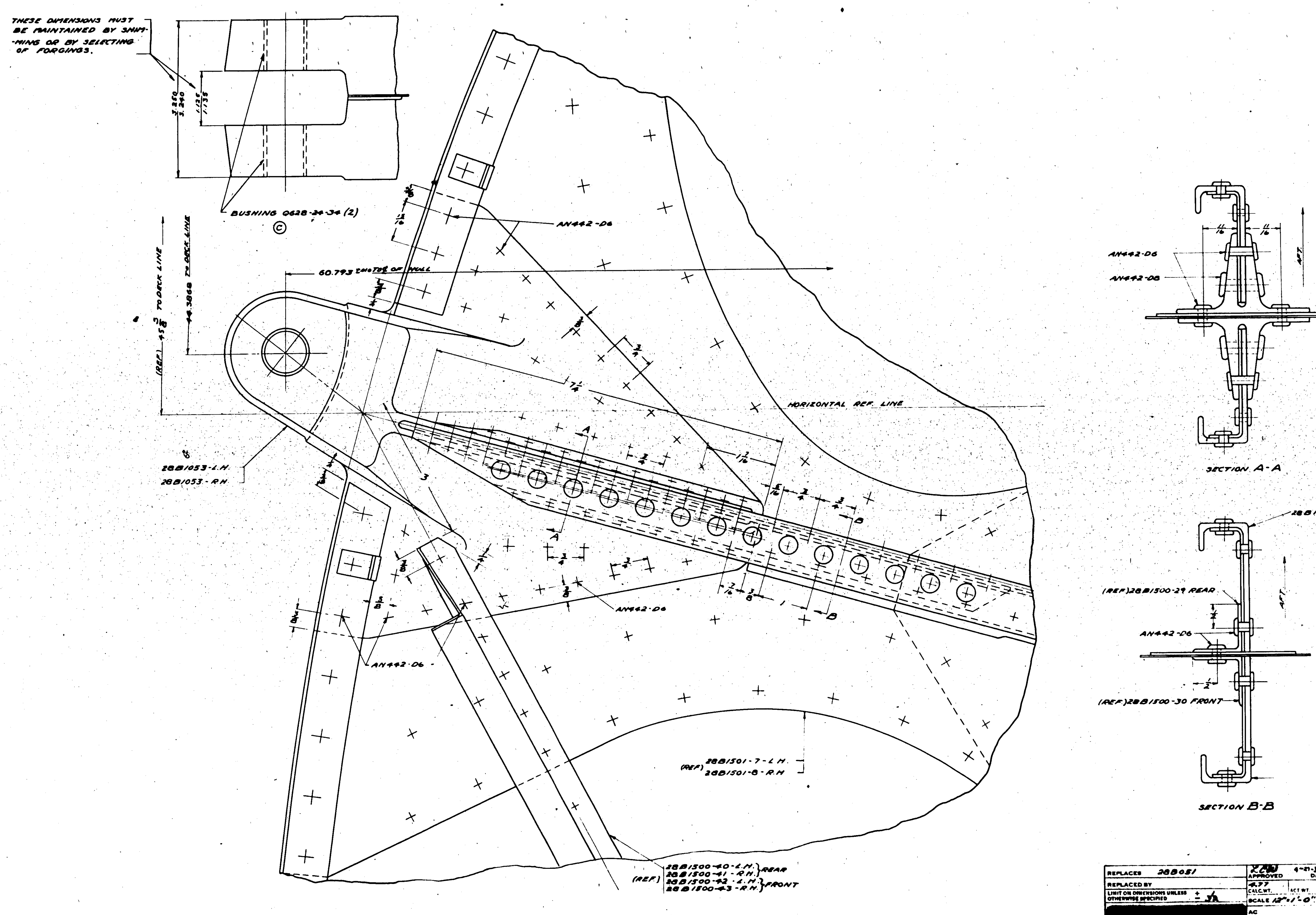

SUPPLIES & EQUIPMENT CLASSIFICATION

LET	ALTERATION	DATE	BY
B	TRACED UP TO DATE	4-27-37	H.W.
C	REMOVED NOTE "LINE REAM .874-.875 2 HOLES" NO WT. CHG.	6-9-43	[illegible]

O.H.	MODEL	NEXT ASSY.	REQ.	PARTS		
R	28-SAME-AN [illegible]	28B5590	1 EA.			
L	28-SAME-AN [illegible]	28B5590	1 EA.			
R	[illegible]	28B1500	1 EA.			
L	[illegible]	28B1500	1 EA.			
R	PBY-5	28B1500	1			
L	PBY-5	28B1500	1			
L&R	PBY-5A	28B5590	1 EA			
L&R	PBY-5B	28B1500	1 EA			
-R	PBY-4	28B1500	1			
-L	PBY-4	28B1500	1	Q628-24-34	2	2
-R	PBY-3	28B1500	1	28B1053-1	1	1
-L	PBY-3	28B1500	1	28B1053	1	1
-R	PBY-2	28B1500	1			
-L	PBY-2	28B1500	1			
-R	PBY-1	28B1500	1	AN442-D8		
-L	PBY-1	28B1500	1	AN442-D6		

REQUIREMENTS PER AIRPLANE — MAT. — PARTS LIST PER ASSY.

REPLACES 28B051

REPLACED BY

LIMIT ON DIMENSIONS UNLESS OTHERWISE SPECIFIED ± 1/64

APPROVED [illegible] DATE 4-21-37

CALC. WT. 4.77 ACT. WT.

SCALE 12" = 1'-0"

AC

NAVY NOTED (MATERIAL) — NOTED (SPEC.) — NONE (HEAT TREAT) — NONE (FINISH)

B.O. 1 [illegible] 7-30-35 [illegible]

DRAFT CHECK EXAM. ENG.

[redacted]

CONSOLIDATED AIRCRAFT CORP.
BUFFALO, N.Y.

STAMP PT. No. WHERE SHOWN

NAME: FITTING INSTALL.-HULL-WING STRUT-BULKHEAD #5

OPP. HAND 28B1051-1

DWG. SIZE G 28B1051

DULLIVAN-MCKEOGAN CO. INC. BUFFALO
IMPERIAL TRACING CLOTH

LET	ALTERATION	DATE	BY

LET	ALTERATION	DATE	BY
R	REDRAWN & REDESIGNED	6-24-42	[illegible]
S	ADDED TO FACE, RADII 1/4 R & 3/32 R. (SPH.), FULL SPH. RAD. (REF.), REMOVED 1 R. ON SEC. AA. ADDED TO PLAN VIEW, RADII 1/4 R & 1/8 R. IN 2 PLACES, DIM. 1.38 & 2.38 APPROX. CALLED OUT RADII 3/16 R. (SPH.) ADDED "FULL SPH. RADII" WAS 1.5/16 R. ADDED RADII 3/4 R & 1/2 R TO SEC. BB (NOT CHG. NEG.)	8-25-42	[illegible]
T	ASSIGNED -0 TO MACH. PART, CHGD. REQ/A/R PL. BLK. AC. ACCORDINGLY. NO. WT. CHG.	2-8-43	[illegible]
U	NOTE "REAM 1.000 .999 WAS REAM .995 .996" NEG. WT. CHG.	4-9-43	[illegible]

FORGE ON 45° ANGLE ℄ BEND UP TO 90° IN FORMING DIE.

$\frac{3}{8}$ R $\frac{1}{8}$

$2\frac{13}{16}$

$\frac{13}{64}$ DIA. HOLE · $\frac{11}{16}$ DIA SPOTFACE 2 PLACES

SYMM. ABOUT ℄ A

$3\frac{1}{4}$

$2\frac{1}{4}$ $1\frac{1}{2}$

$\frac{1}{2}$R

$\frac{1}{16}$

$\frac{5}{32}$ R

$1\frac{3}{16}$ R

$1\frac{1}{2}$ R

$\frac{5}{16}$

$\frac{1}{2}$ $\frac{1}{16}$

$2\frac{17}{32}$

$1\frac{5}{8}$ APPROX.

$.312 \pm .002$

$2\frac{5}{8}$ APPROX.

$\frac{3}{16}$R

$1\frac{3}{16}$ R

℄ 1 APPROX. BLEND $\frac{1}{4}$R. TO $\frac{3}{8}$R.

℄ FULL SPH. RAD.

℄ APPROX BLEND R. TO $\frac{3}{8}$R.

B

$2\frac{27}{32}$

$10\frac{1}{2}$

PART NO.

$\frac{1}{8}$

$5\frac{1}{4}$

2R

B

$2\frac{1}{4}$

$\frac{3}{16}$ R. (SPH.)

℄ $\frac{1}{8}$R.

℄ $\frac{1}{4}$R.

$\frac{15}{16}$ (REF)

$9\frac{3}{4}$

$2\frac{1}{4}$

$5\frac{11}{32}$

A

-2 ROUGH FORGING

-0 MACHINED PART

GENERAL NOTES:-
ALL DRAFT ANGLES 7°
FORGING TOLERANCES ± 1/32
MACHINING TOLERANCES ± .015
UNLESS OTHERWISE SPECIFIED.
SMALL UNMARKED RADII $\frac{1}{16}$

PARTING LINE

$1\frac{5}{16}$

$.588^{+.005}_{-.000}$

$\frac{1}{4}$R

$\frac{7}{32}+\frac{1}{32}-\frac{1}{32}$

REAM .999 1.000 Ⓤ

$\frac{5}{32}^{+.005}_{-.025}$

$\frac{1}{8}$

$1\frac{11}{16}+\frac{1}{32}-0$

℄ $\frac{5}{32}$ R. (SPH.)

$\frac{1}{2}$R

$\frac{1}{4}$R

$\frac{1}{4}$R

℄ FULL SPH. RAD. (REF.)

$1\frac{1}{4}$

$\frac{1}{16}$

2R

$\frac{1}{2}$R

$\frac{15}{16}$

$\frac{3}{32}^{+.030}_{-.013}$

$\frac{5}{32}+\frac{1}{32}-\frac{1}{32}$

SECTION A-A

$\frac{3}{8}$R $\frac{3}{16}$R $\frac{1}{8}$R $\frac{5}{32}$R $1\frac{3}{16}$

℄ $\frac{5}{16}$R ℄ $\frac{1}{2}$R. $1\frac{3}{16}$ .162 ± .005

SECTION B-B

-0	28Y-5B	28B1030	2	
-0	28Y-5A	28B1030	2	
-0	28Y-5	28B1030	2	
-0	28-5AMH	28B1030	2	
-0	28-5AMG	28B1030	2	
-0	28-5MN	28B1030	2	
-0	28-5ME	28B1030	2	
-0	28-5MG	28A1030	2	
-0	28-5MA	28B1030	2	
CLASS DASH NO.	MODEL	NEXT ASSY	NOS.	

REQUIREMENTS PER AIRPLANE

REPLACES — 2 ASSY

REPLACED BY — ACT. QTY.

SCALE: NOTED — 12"/1.0"

STAMP PART NUMBER WHERE SHOWN

28B1052-0 MACHINED PART
28B1052-2 AL. ALLOY FORGING — AGA7 (GS4)

PART NO	STOCK	MATERIAL	SPEC	LH RH REQ -0	LH RH REQ -2	LH RH REQ -3	LH RH REQ

PARTS LIST PER ASSY.

AC NAVY — HEAT TREAT: 65,000 #/in² — FINISH: NONE

CZC — DRAFT 2-13-43 — CHECK — STRUCT — MAT

NAME: FITTING-HULL-WING STRUT-BULKHEAD

OPP HAND

CONSOLIDATED AIRCRAFT CORP. SAN DIEGO CALIF.

DWG G 28B1052

R

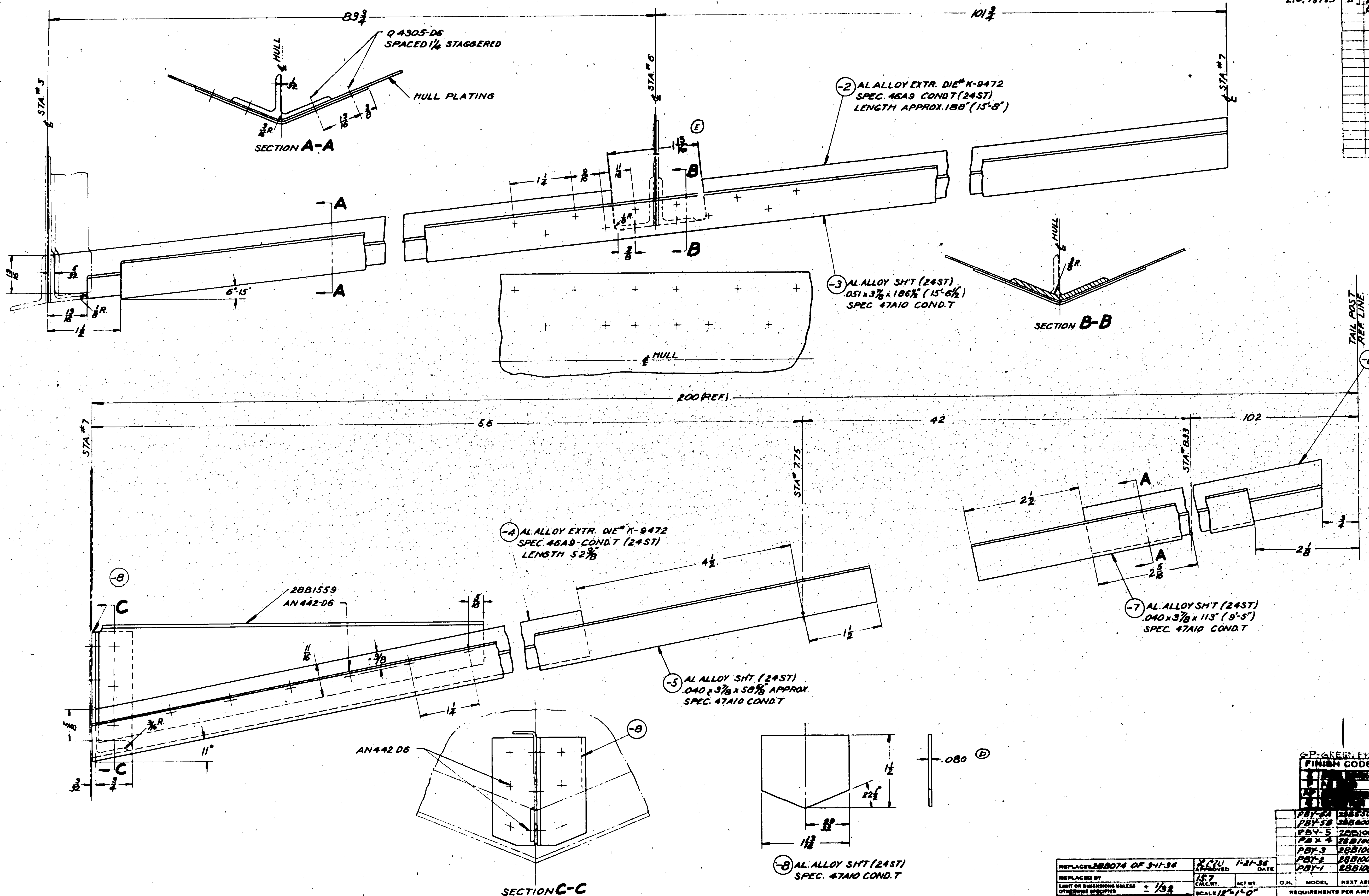

E.O. 29354
E.O. 18163

SUPPLIES & EQUIPMENT CLASSIFICATION

LET	ALTERATION	DATE	BY
C	TRACED	4-26-37	B.H.W.
D	-8 WAS .092 THICK	11/11/40	[illegible]
E	DIM. 1 13/16 WAS 1 7/32, SIDES OF SLOT CUT 90° TO TOP FACE OF -2	11/11/40	[illegible]

FINISH:-
Z-P-2 GP ON PBY-1
Z-P-2 GP ON PBY-2 & FUTURE

GP-GREEN PRIME
FINISH CODE
[redacted]

O.H.	MODEL	NEXT ASSY.	REQ.	PART NO.			
				Q4305-D6			
				AN442-D6	13	13	13
				28B1559	1	1	1
	PBY-5A	28B6300	1	-8	1	1	1
	PBY-5B	28B6000	1	-7	1	1	1
	PBY-5	28B1000		-6	1	1	1
	PBY-4	28B1000		-5	1	1	1
	PBY-3	28B1000		-4	1	1	1
	PBY-2	28B1000		-3	1	1	1
	PBY-1	28B1000		28B1074-2	1	1	1

REQUIREMENTS PER AIRPLANE — MAT. — PARTS LIST PER ASSY.

REPLACES	28B074 OF 5-11-34
REPLACED BY	
LIMIT ON DIMENSIONS UNLESS OTHERWISE SPECIFIED	± 1/32
APPROVED	[illegible] 1-21-36 DATE
CALC. WT.	15.7
ACT. WT.	
SCALE	12" = 1'-0"
AC	
NAVY	NOTED
MATERIAL	NOTED
SPEC.	NOTED
HEAT TREAT	NONE
FINISH	NOTED
DRAFT	1-15-36 [illegible]
CHECK	B.O.I. 5-5-37
EXAM.	Watts
ENG.	

[redacted]

CONSOLIDATED AIRCRAFT CORP.
BUFFALO, N. Y.
STAMP PT. No. WHERE SHOWN

NAME: KEELSON - HULL - STA # 5 AFT

OPP HAND

DWG. SIZE G 28B1074

46A9 COND T. 3/8 × 1/2 × 1/16 ANGLE			
ALCOA DIE K9876 -2 TO -8 INCL" &			
"7/8 Z" ALCOA DIE K9048 -9, -10, -26,			
-27 TRIM ENDS OF OUTSTANDING			
LEGS AT 30°" WT. CHG. NO			

SUPPLIES & EQUIPMENT CLASSIFICATION

	LET	ALTERATION	DATE	BY
	C	TRACED TO DATE	5-26-37	
	D	CHANGED DIM 9 11/16 TO 9 15/16	1-25-38	Jonny
	E	AT BOTTOM OF ℄ OF FRONT BEAM 1/16 DIM WAS 5/8		
		AT TOP OF ℄ OF REAR BEAM 7/8 DIM WAS 5/8		
		AT BOTTOM OF ℄ OF REAR BEAM ADDED 5/16 DIM'S. 1 1/4 DIM. WERE 1 1/8.		
		ADDED PBY-5 REQMTS.	11-17-38	HASTON
	F	2 1/4 WAS 2, 3/16 WAS 5/8		
	G	ADDED DIMEN, 2 5/8 WAS 2 1/16		
		2" WAS 2 1/16	12-28-37	
E.O.A57299	H	CREATED -55 ASS'Y & ADDED -21 N/A 28B5068 FOR PBY-5 & PBY-5A (1EA) TO REQ BLOCK. NO. WT. CHG.	10/26/42	
E.O.#A97711	J	REVISED REQ/AIRPLANE. NO WT CHG.	1-13-43	
	K	NOTES "MAKE -2 TO -8 INCL - ... OUTSTANDING LEGS AT 30°" WERE "ALL EXTRUSIONS SPEC.		

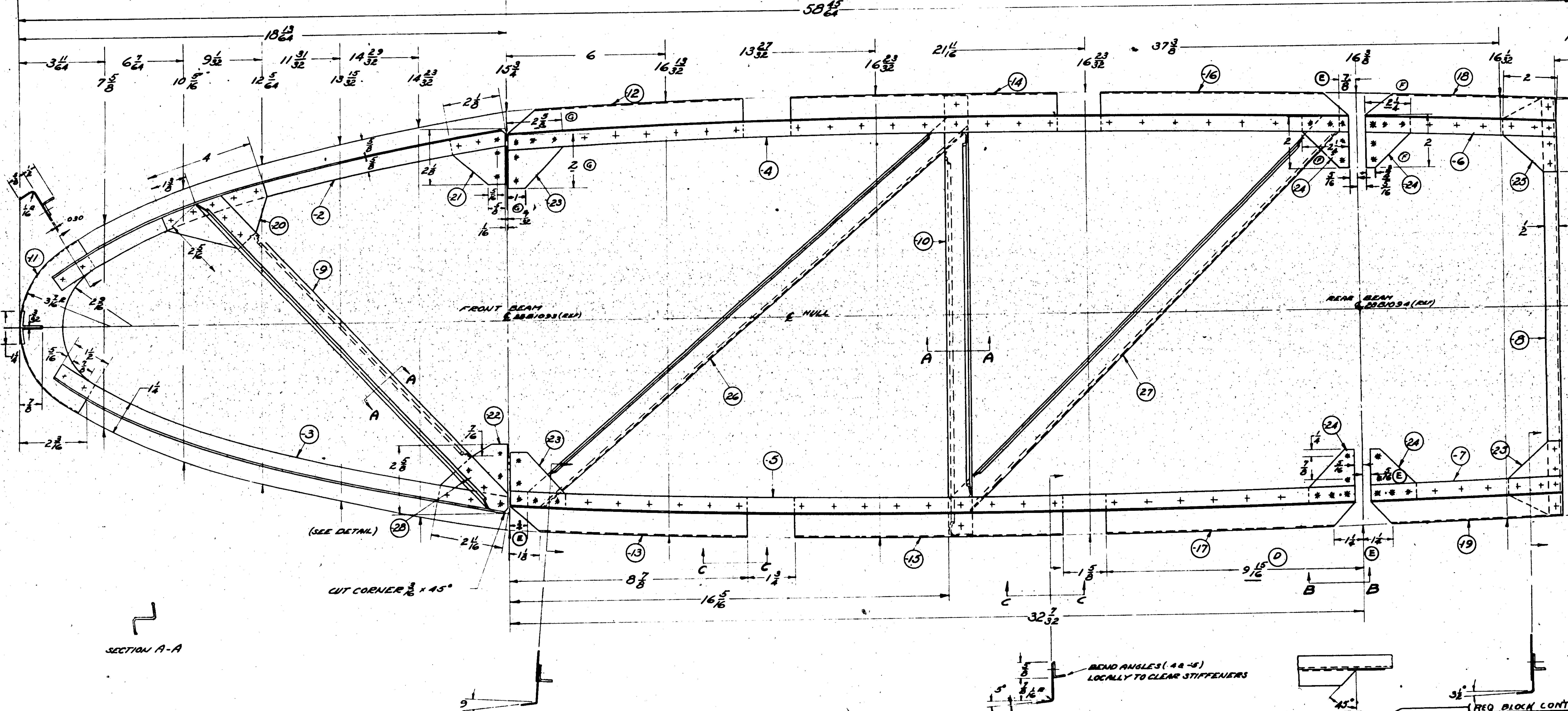

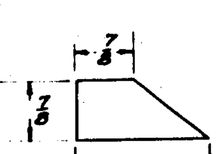

SPACER
.064 AL. ALLOY SHEET
SPEC 47A10 COND'T
DETAIL OF -28

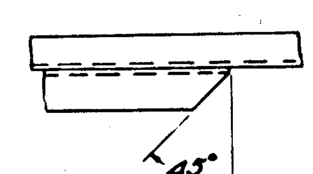

VIEW C-C

NOTES:-
ALL RIVETS AN442D5
ALL RIVETS MARKED *
ARE TO BE DRIVEN AT ASSY.
LOCATE ALL RIVETS APPROX AS
SHOWN
(K) MAKE -2 TO -8 INCL. FROM
Y-6-A6T.
MAKE -9, -10, -26, & -27 FROM
Y-37-A8T.
TRIM ENDS OF OUTSTANDING
LEGS AT 30°

.030 AL ALLOY SHEET (24SO)
SPEC. 47A10 COND. A.
HEAT TREAT SR 53 (COND 'T')
-11 FORMED SHEET
-12 TO -19 INC. DRAWN ANGLE
(1 3/8 × 1 1/2 × .030) M 924
.040 AL. ALLOY SH'T. (24ST)
SPEC 47A10 COND. T
-20 TO -25 INC.

GP-GREEN PRIME
FINISH CODE

FINISH:-
Z-P-GP ON PBY-1
Z-P-GP ON PBY-2 & FUTURE

-55	PBY-5A	28B1006	1
	28-5MA	28B1006	1
	28-5MC		1
	28-5ME		1
	28-5AMC		1
	28-5MN		1
	28-5AMN		1
-55	PBY-5	28B1006	1
-21	PBY-5	28B5068	2

C.13595 → -55 PBY-5A; C.91876 #90 & 346 & ON → -55 / -21 PBY-5

REQ BLOCK (CON'T)

(REQ BLOCK CONT)

C.13595; C.70496, C.77713 & C.88478.; C.70496 & C.91876 #1-39 & 31-345

O.N.	MODEL	NEXT ASSY.	REQ.
-21	PBY-5A	28B5068	2
	PBY-5A	28B1006	1
	PBY-5	28B1006	1
	PBY-4	28B1006	
	PBY-3	28B1006	
	PBY-2	28B1006	
	PBY-1	28B1006	1
	PBY-[illegible]	28B1006	1

REQUIREMENTS PER AIRPLANE

PART No.	PBY-1	PBY-2	PBY-3	-55
AN442D5				
-28	1	1	1	
27	1	1	1	1
26	1	1	1	1
25	2	2	2	2
24	4	4	4	4
23	2	2	2	2
22	1	1	1	
21	1	1	1	
20	1	1	1	
19	1	1	1	1
18	1	1	1	1
17	1	1	1	1
16	1	1	1	1
15	1	1	1	1
14	1	1	1	1
13	1	1	1	1
12	1	1	1	1
11	1	1	1	
10	1	1	1	1
9	1	1	1	
8	1	1	1	1
7	1	1	1	1
6	1	1	1	1
5	1	1	1	1
4	1	1	1	1
3	1	1	1	
28B1110-2	1	1	1	

MAT. | PARTS LIST PER ASSY.

REPLACES	
REPLACED BY	
LIMIT ON DIMENSIONS UNLESS OTHERWISE SPECIFIED	± .010
[redacted]	

APPROVED 5-26-37 DATE
CALC. WT. | ACT. WT.
SCALE 6"=1'-0"
AC
NAVY NOTED — MATERIAL
NOTED — SPEC.
NOTED — HEAT TREAT
NOTED — FINISH
DRAFT 1-31-36 | CHECK | ENG.
OPP. HAND

CONSOLIDATED AIRCRAFT CORP.
BUFFALO, N. Y.
STAMP PT. No. WHERE SHOWN

NAME RIB HULL LOWER FIN - UPPER

G 28B111[illegible]

SUPPLIES & EQUIPMENT CLASSIFICATION			
LET	ALTERATION	DATE	BY
B	TRACED	4-27-37	V.L.B.
C	PBY-3 REQMTS. REMOVED	6-4-37	RKR
D	REPLACEMENT NOTE ADDED	"	"

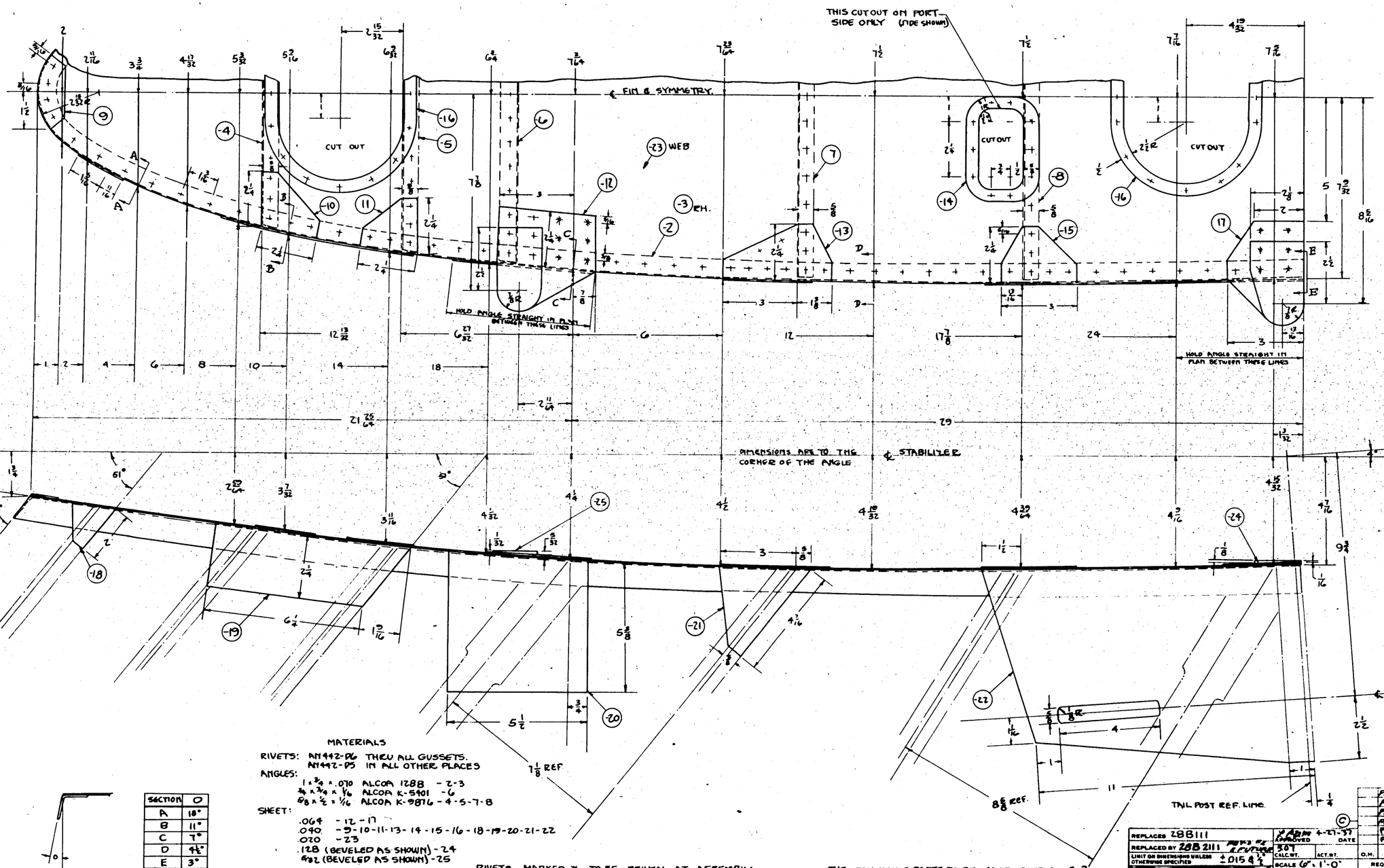

MATERIALS

RIVETS: AN442-D6 THRU ALL GUSSETS.
AN442-D5 IN ALL OTHER PLACES

ANGLES: 1 x 3/4 x .070 ALCOA 1288 - 2-3
3/4 x 3/4 x 1/16 ALCOA K-5901 - 6
5/8 x 1/2 x 1/16 ALCOA K-9876 - 4-5-7-8

SHEET:
.064 - 12 - 17
.040 - 9-10-11-13-14-15-16-18-19-20-21-22
.020 - 23
.128 (BEVELED AS SHOWN) - 24
6/32 (BEVELED AS SHOWN) - 25

SECTION	O
A	18°
B	11°
C	7°
D	4½°
E	3°

SECTIONS A-B-C-D & E

RIVETS MARKED * TO BE DRIVEN AT ASSEMBLY WITH FIN STRUCTURE

THE FOLLOWING PARTS TO BE 4G AND COND. A - 2-3

ALL AL. ALLOY SHEET SPEC. 97A10 (COND T) ALLOY 24T EXCEPT AS NOTED
ALL AL. ALLOY EXTUSIONS SPEC. 46A9 (COND. T) ALLOY 24T EXCEPT AS NOTED
HEAT TREAT ALL CONDITION A MATERIAL PER SPEC. 3R63 (COND. T)
RIVET ALLOY EXCEPT AS NOTED.

FINISH CODE

S	[redacted]
P	[redacted]
AP	[redacted]
C	[redacted]

FINISH:-
Z-P-A[redacted] ON PBY-1
Z-P-[redacted] ON PBY-2 & FUTURE

	AN442-D6	AN442-D5
-25	2	
-24	2	
-23	1	
-22	2	
-21	2	
-20	2	
-19	2	
-18	2	
-17	2	
-16	2	
-15	2	
-14	1	
-13	2	
-12	2	
-11	2	
-10	2	
-9	1	
-8	1	
-7	1	
-6	1	
-5	1	
-4	1	
-3	1	
-2	1	

PARTS	DRAWING	MODEL	NEXT ASSY.	REQ.
	PBY-3	SEE B.M.		
	PBY-4	SEE B.M.		
	PBY-5	SEE B.M.		
	PBY-1	288 1116		
	PBY-2	2881006		
	PBY-1	2881006		

REQUIREMENTS PER AIRPLANE	MAT.	PARTS LIST PER ASSY.
		J.W.L. [redacted] GREEN
NOTED NOTED NOTED NOTED		2-12-36 9-28-37
MATERIAL SPEC. HEAT TREAT FINISH		DRAFT CHECK EXAM ENG.

REPLACES 288111
REPLACED BY 288 2111 FUTURE
LIMIT ON DIMENSIONS UNLESS OTHERWISE SPECIFIED ±.015 4 PL
1st APPROVED 4-27-37 DATE
SOT CALC.WT. ACT.WT.
SCALE 6" = 1'-0"
AC [redacted]
NAVY NOTED
MATERIAL

CONSOLIDATED AIRCRAFT CORP. BUFFALO, N.Y.
STAMP PT. No. WHERE SHOWN

NAME RIB - HULL LOWER FIN TOP
OPP. HAND
SIZE G 9122
288 1111

Ⓒ REPLACEMENT NOTICE - 288 2111 AS A UNIT MAY BE USED IN PLACE OF 288 1111

Ⓓ

SUPPLIES & EQUIPMENT CLASSIFICATION			
LET	ALTERATION	DATE	BY
J	TRACED UP TO DATE	4-25-37	[illegible]
K	DIMENSIONS FOR -2 WERE .057 X 5 X 1 1/16	5-27-37	[illegible]
L	REMOVED PBY-3 REQUIREMENTS FOR 28B120-2 & 3	5-27-37	[illegible]
C.O.5338A M	CHANGED BOLT FROM AN28-40 TO AN28-42	6-23-37	[illegible]
C.O. #5899 N	REMOVED REQ. FOR PBY-1, PBY-2, PBY-3 & COMM'R'S & REPLACED BY 28B3126 FOR PBY-1, PBY-2, PBY-3 & COMM'R'S	11-26-37	[illegible]
O	ADDED 28B3126 AS NEXT ASSEMBLY FOR -2 FOR PBY-1, PBY-2 PBY-3 & COMM. #3	2-8-37	[illegible]

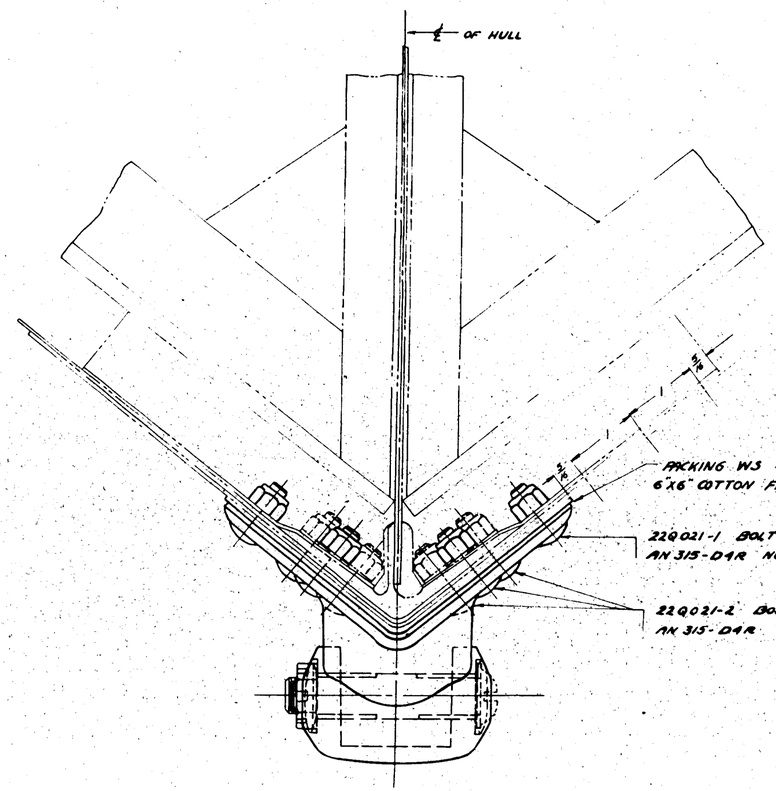

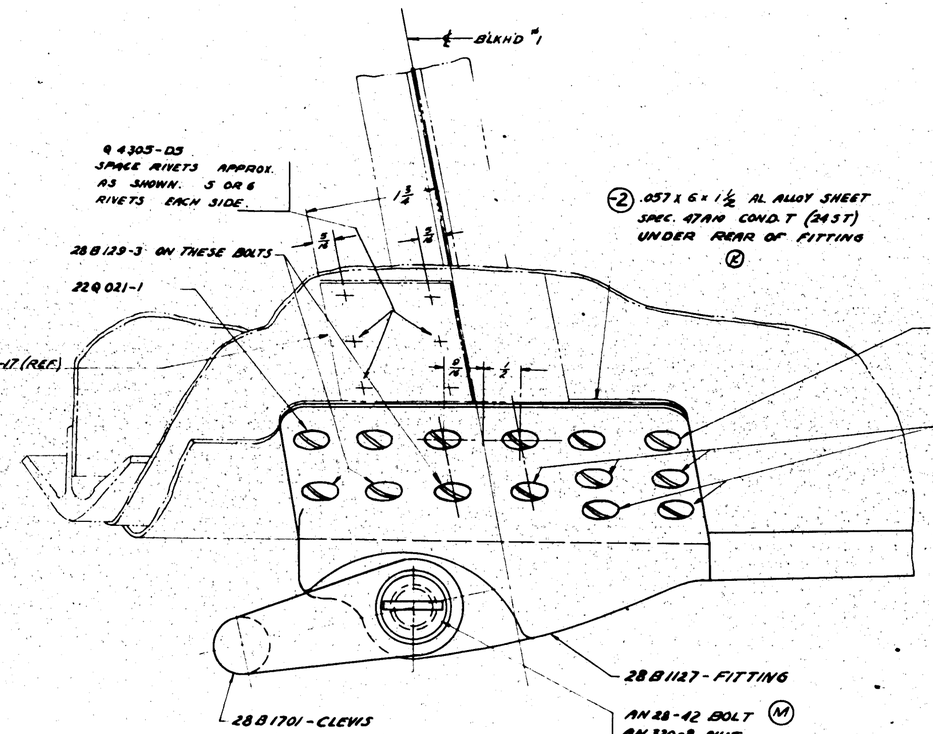

ALL BOLTS EXCEPT AS NOTED ARE 22Q021-2

NOTE - STAKE ALL BOLTS, ATTACHING FITTING "28B1127 TO HULL, 3 PLACES

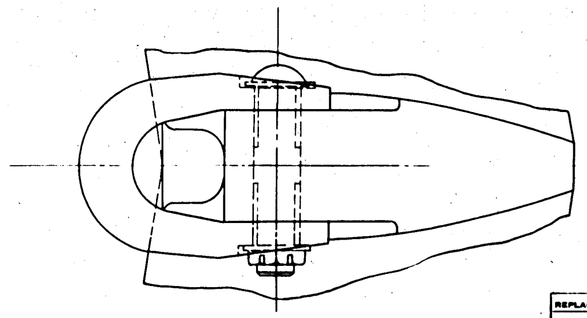

					28B1701	1	1	1		
					28B129-3	2	2	2		
					28B129-2	2	2	2		
					28B1127	1	1	1		
-2	PBY-4	28B3126			28B1126-2	2	2	1		
					9 4305-05 1/2	12	12	12		
-2	PBY-3	28B3126			22Q021-2	24	24	24		
-2	PBY-2	28B3126			22Q021-1	4	4	4		
-2	PBY-1	28B3126			AN 320-3R-3	1	1	1		
	COMM'R'S	28B1008			AN 320-8	1	1	1		
	COMM'R'S	28B1008			AN 315-D4R	28	28	28		
	XPBY-1	28B001		/	AN 28-42	1	1	1		
							ASSEMBLIES REQUIRED			
					PARTS (FROM)	2/1	2/1	2/1		

REPLACES 28B1126 OF 12-27-37	APPROVED [illegible]	DATE 4-29-37		
REPLACED BY 28B3126 FOR PBY-2	CALC WT. 2.5#	ACT WT.		
LIMIT OR DIMENSIONS UNLESS OTHERWISE SPECIFIED ± [redacted]	SCALE 12" = 1'-0"	O.H.	MODEL	NEXT ASSY.
	REQUIREMENTS PER AIRPLANE			
	AC			
	NAVY NOTED	NOTED	NONE	W3
	MATERIAL	SPEC.	HEAT TREAT	FINISH

PARTS LIST PER ASSY.				
	DRAWN [illegible]			
	3-8-36	5-3-37	5-27-37	
	DRAFT	CHECK	EXAM.	ENG.

CONSOLIDATED AIRCRAFT CORP. BUFFALO, N.Y.
STAMP PT. No. WHERE SHOWN

NAME
FITTING - INSTALLATION - HULL MOORING & TOWING

OPP. HAND

SIZE G | DWG. SITE 28B1126

BUFFALO-SPRINGFIELD CO. INC. BUFFALO
IMPERIAL TRACING CLOTH

SUPPLIES & EQUIPMENT CLASSIFICATION			
LET	ALTERATION	DATE	BY
E	TRACED UP TO DATE	5-8	
G	CHGD -6(L) TO -8(L)-STATD -8(L) & ADDED -7 (2) ALL MAT'L CORK PLATE SPEC. 32C5 Cont w/L EMD	4-27-38	
H	DIM 18'3/16 WAS 15. ALSO W.T. CHG E.O.A46806	6-23-38	

NOTE THIS RECESS REQUIRED ON XP3Y-1 ONLY.-DIMENSIONS MARKED THUS * REFER TO XP3Y-1 ONLY

VIEW A-A

SECTION					
	083	6	9	12	13½
X	6"	5 3/32	3 5/16	3 1/2	2 25/32
B	USE 4½ R.	2 3/32	2	1 29/32	
C		3 5/32	2 1/32	2 5/32	2 5/32
D		3 5/32	2 1/32	2 5/32	1 13/16
E		3 5/32	2 1/32	2 5/32	1 13/16
F		2 5/8	1 13/16	2 5/32	2 5/32
Y	5 3/32	3 1/32	3 5/16	5	4 5/8

SEC 15 (H) | SEC 13½ | SEC 12 | SEC 9 | SEC 6 | SEC 3 | SEC 0

14 13/16" — 13½" — 12" — 10 29/32" — 9" — 6" — 3"

NOTE -9,-7&-8 LIGHT DENSITY CORK -2&-3 COARSE GRANULAR CORK SPEC 32C5

CORK PLATE 1" THICK SPEC 32C5 GLUED FAST CLASS B

WHITE DUCK COVERING - 8 OZ. 136 YD. SINGLE FILL - SPEC. COMM. TO BE GLUED FAST. ADD ADHESIVE TAPE AT SHARP EDGES AROUND ENDS

28881610 CLAMP

SYMMETRICAL ABOUT ℄

28881757

PART	STOCK - SIZE
-5	1 x 13 3/16 x 8
-8	1 x 7 7/16 x 9
-9	1 x 6 1/2 x 10 1/2

FINISH - XP3Y-1 (2-NGR) P3Y-1 (2-AMP) GP P3Y-2 } 2-NGR GP #FUTURE }

28881757	1	1	1	1	
28821D	2	2	2	2	

28-SW.ANG	28B1095/LEA						
28-DR.ANG	28B1095/LEA						
28-S/SA.ANG	28B1095/LEA						
P3Y-S.A.N.G	28B1095/LEA						
P3Y-1	28B1095	-9	2	2	2	2	
P3Y-3	28B1095	-8	2	2	2	2	
P3Y-2	28B1095	-7	2	2	2	2	
P3Y-1	28B1095	-6	1	1	1	1	
YA3Y-1	28B1095	-3	1	1	1	1	
		28B1131-2	1	1	1	1	
		PART NO.	L.H. XP3Y-1	R.H. XP3Y-1	L.H. P3Y-2	R.H. P3Y-2	

REPLACES 28B1131 or 5-29-37

REPLACED BY

LIMIT ON DIMENSIONS UNLESS OTHERWISE SPECIFIED ± 1/32

APPROVED 5-21-37 DATE

CALC.WT. 4.23 ACT.WT.

SCALE 12"=1'0"

O.H.	MODEL	NEXT ASSY.	REQ.

REQUIREMENTS PER AIRPLANE

MAT. PARTS LIST PER ASSY.

AC			
NAVY NOTED	NOTED	NONE	NOTED
MATERIAL	SPEC.	HEAT TREAT	FINISH

DRAFT A.B. 5-21-37 CHECK 5-6-38 STAM. ENG.

CONSOLIDATED AIRCRAFT CORP. BUFFALO, N.Y.

STAMP PT. No. WHEN SHOWN

NAME BUMPER-HULL NOSE

OPP. HAND

SIZE G 28B1131

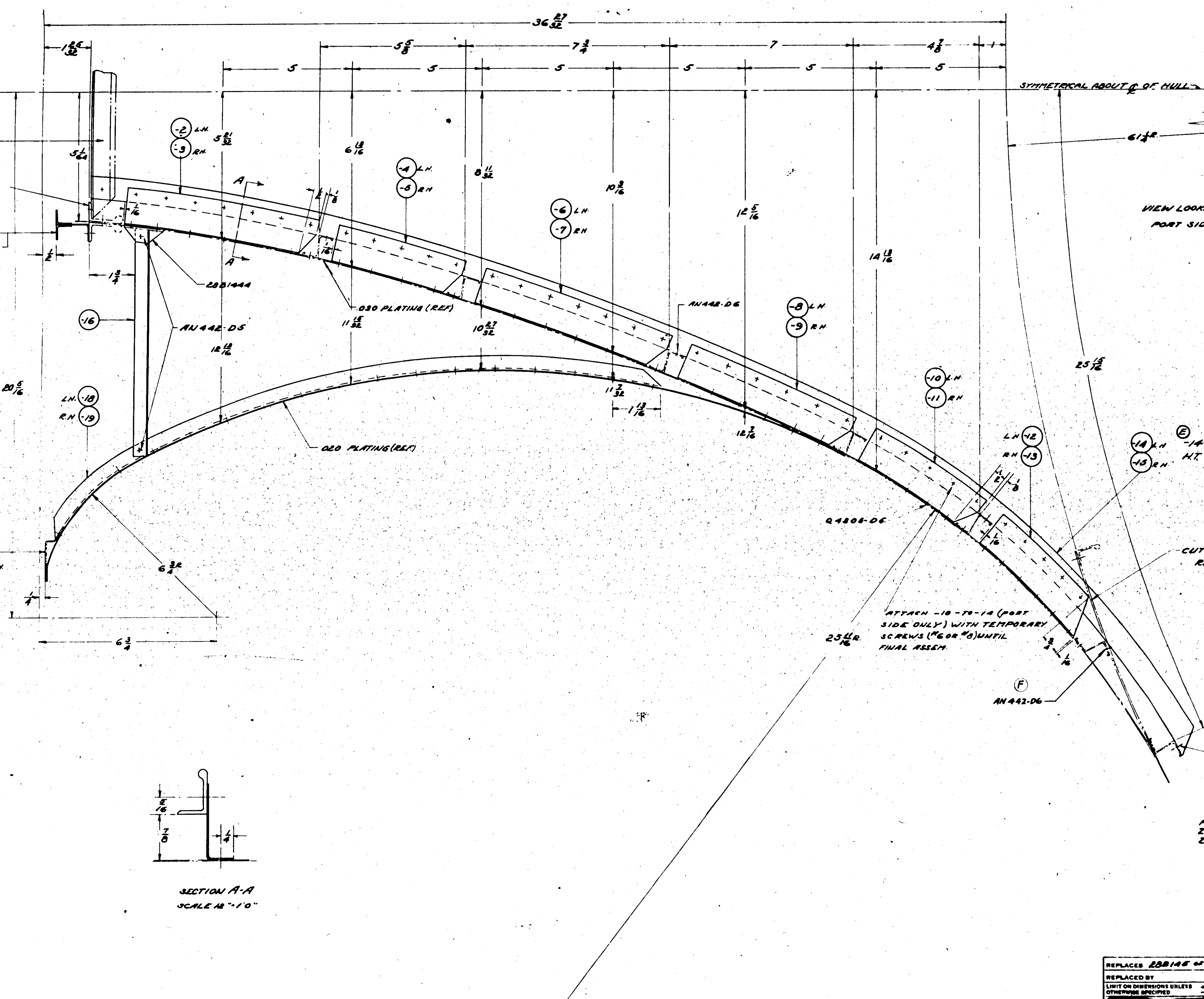

VIEW LOOKING FORWARD
PORT SIDE SHOWN

	SUPPLIES & EQUIPMENT CLASSIFICATION		
LET	ALTERATION	DATE	BY
C	TRACED TO DATE	4-28-37	[illegible]
D	-16 WAS 1 REQ'D NOW TWO	6-12-37	[illegible]
E	-14 2450 COND"A" WAS 24ST COND. T; HT SR 53 ADDED	11-11-40	[illegible]
F	AN442-D5 WAS AN442-D6. TO AN442-D5 ADD NOTE "THIS RIVET ONLY" NO WT. CHG.	3-5-42	[illegible]

E.O. 19662 (E)
E.O.A-18795 (F)

LIST OF DASH NO'S. AND MATERIAL FROM WHICH THEY ARE MADE

SPEC 47A10 COND. A AL. ALLOY SHEET
H.T. SR 53 COND. T
1 7/16 x 1/2 x .030 ANGLE
-2-3-4-5-6-7-8-9-10-11-12-13

SPEC. 46A9 COND. T AL. ALLOY EXTRUSION
7/8 x 9/16 x .060 BULB ANGLE DIE # K-1559
-15

SPEC 46A9 COND. T AL. ALLOY EXTRUSION
9/16 x 9/16 x .040 PLAIN ANGLE DIE # K-6240
-16-17-18-19

ALL OUTSIDE RIVETS Q4305-D4
ALL INSIDE RIVETS AN442-D5 EXCEPT WHERE OTHERWISE SPECIFIED

BEND FLANGES OF ANGLES AS PER 28B036

GP-GREEN PRIME

FINISH CODE	
Z	[redacted]
P	[redacted]
AP	[redacted]
C	[redacted]

(D)

FINISH: GP
Z-P-2 [illegible] ON PBY-1
Z-P-2 [illegible] ON PBY-2 & FUTURE GP

O.H.	MODEL	NEXT ASSY.	REQ.	PART NO.			
				28B1444	2	2	2
				19	1	1	1
				18	1	1	1
				16	2	2	2
				15	1	1	1
				14	1	1	1
				13	1	1	1
				12	1	1	1
				11	1	1	1
	28-5AMK	28B5005	1	10	1	1	1
	28-5MK		1	9	1	1	1
	28-5MN		1	8	1	1	1
	28-5ME		1	7	1	1	1
	28-5MC		1	6	1	1	1
	28-5MA		1	5	1	1	1
	PBY-5B		1	4	1	1	1
	PBY-5A		1	3	1	1	1
	PBY-5	28B5005		28B1145-2	1	1	1
	PBY-4	28B1005		Q4305-D6			
	PBY-3	28B1006	1	Q4305-D4			
	PBY-2	28B1006	1	AN442-D6			
	PBY-1	28B1005	1	AN442-D5			
REQUIREMENTS PER AIRPLANE				MAT.	PBY-1	PBY-2	PBY-3
					PARTS LIST PER ASSY.		

REPLACES 28B145 OF 4-23-34
REPLACED BY
LIMIT ON DIMENSIONS UNLESS OTHERWISE SPECIFIED ± 1/64

[redacted]

APPROVED [illegible] DATE 4-28-37
CALC. WT. 1.78 ACT. WT.
SCALE 6"=1'-0" 12"=1'-0"
AC
NAVY NOTED — MATERIAL
NOTED — SPEC.
NOTED — HEAT TREAT
NOTED — FINISH
DRAFT: B.H. 11-4-36 CHECK: [illegible] 6-21-37 EXAM.: MILLER ENGR.

CONSOLIDATED AIRCRAFT CORP.
BUFFALO, N.Y.
STAMP PT. No. WHERE SHOWN

NAME: BELTFRAME - HULL SUPERSTRUCTURE STA. #4.126

OPP. HAND
DWG. SIZE G 28B1144

SULLIVAN-McGREGOR CO., INC. BUFFALO
IMPERIAL TRACING CLOTH

LET	ALTERATION	DATE	BY
	SUPPLIES & EQUIPMENT CLASSIFICATION		
G	TRACED UP TO DATE	8-28-37	[illegible]
H	REMOVED REQ. FOR AN520-D10-8 (WAS 2 REQ.)	8-23-37	[illegible]
I	CORRECT DWG. TO SHOW 28B1463 ON TOP OF BEAM [illegible] NO ENGAGES [illegible] -10 & -11	1-17-38	[illegible]
J	ADDED NOTE OMITTING 3 RIVETS IN -10 & -11	1-17-38	[illegible]
K	SUBSTITUTE 28B2465 & -1 FOR 28B1465 & -1 ON PBY3 & FUTURE (C.O. #5586)	1-7-38	[illegible]
L	C.O. 10238 REPLACED 28B2465 & -1 WITH 28B4228 L & R. REMOVED -10 & -11. ADDED -80 ASSY. FOR XPBY-5	3-21-39	[illegible]
M	E.O. #5349 ADDED -16 & -17, & -550 ASS'Y & VIEW "F" - ALL FOR PBYS	1-26-40	[illegible]
N	ADDED SECTION G-G.	3/21/40	[illegible]
P	REMOVED ONE RIVET FROM -14	4-11-40	[illegible]
Q	E.O. A-18795 ADDED AN442-D6, AN442-D5 & NOTE "THIS RIVET ONLY" NO WT. CHG.	3-5-42	[illegible]
R	MAT. NOTE FOR -16 L/R WAS "5/8 x 5/8 x 1/16 ANGLE DIE #K13624". MAT. NOTE FOR -6, -7, -13, -14, & -15 WAS "SPEC. 46A9 COND. T AL ALLOY EXTR. 9/16 x 9/16 x .040 PLAIN ANGLE DIE #6240" WT. CHG. NEG.	8-3-4[illegible]	[illegible]

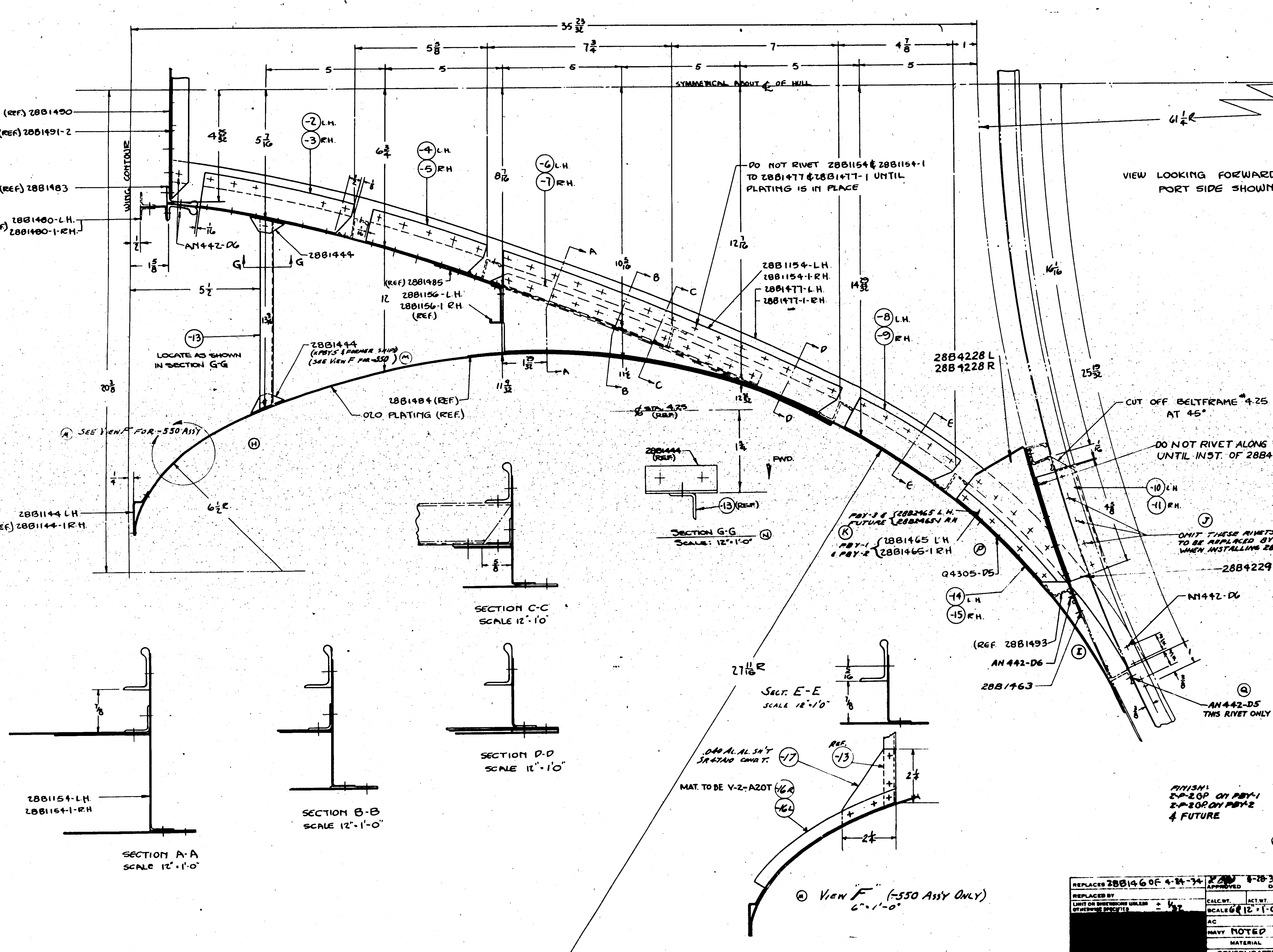

LIST OF DASH NOS & MATERIAL FROM WHICH THEY ARE MADE

MAT. FOR -6, -7, -13, -14, & -15 TO BE Y-2-A12T

-2, -3, -4, -5, -8, & -9: - 1 7/16 x ½ x .030 ANGLE. MAKE FROM AL. ALLOY SH'T. SPEC. 47A10 COND. A. H.T. SR53 COND. T

-10, & -11: - 1⅝ x ½ x .030 ANGLE MAT'L. SAME AS ABOVE

ALL OUTSIDE RIVETS Q4305-D4
ALL INSIDE RIVETS AN442-D5
EXCEPT WHERE OTHERWISE NOTED

BEND FLANGES OF ANGLES AS PER CHART 28B036

GP - GREEN PRIME
[redacted]

O.H.	MODEL	NEXT ASSY.	REQ.	PARTS	PBY-1	PBY-2	PBY-3	PBY-4	[illegible]	[illegible]
				28B4248R					1	
				28B4248					1	
				28B2465-1			1	1		1
				28B2465			1	1		1
				Q4305-D5 & D4						
				28B1146-17						2
				AN442-D6 & D5						
				28B1146-16R						1
				28B1146-16L						1
				28B1477-1	1	1	1	1	1	1
				28B1477	1	1	1	1	1	1
				28B1465-1	1	1				
				28B1465	1	1				
				28B1463	2	2	2	2	2	2
				28B1154-1	1	1	1	1	1	1
				28B1154	1	1	1	1	1	1
-550	28-5AMN	28B5005	1	28B1444	4	4	4	4	4	2
-550	28-5AMC		1	15	1	1	1	1	1	1
-550	28-5MN		1	14	1	1	1	1	1	1
-550	28-5ME		1	13	2	2	2	2	2	2
-550	28-5MC		1	11	1	1	1	1		1
-550	28-5MA		1	10	1	1	1	1		1
-550	PBY-5B		1	9	1	1	1	1	1	1
-550	PBY-5A		1	8	1	1	1	1	1	1
-550	PBY5	28B5005	1	7	1	1	1	1	1	1
-50	XPBY-5	28B1005-50		6	1	1	1	1	1	1
	PBY-4	28B1005		5	1	1	1	1	1	1
	PBY-3	28B1005		-4	1	1	1	1	1	1
	PBY-2	28B1005		-3	1	1	1	1	1	1
	PBY-1	28B1005		28B1146-2	1	1	1	1	1	1

REQUIREMENTS PER AIRPLANE — MAT. — PARTS LIST PER ASSY.

REPLACES 28B146 OF 4-24-34 — APPROVED [illegible] DATE 8-28-37
REPLACED BY
LIMIT ON DIMENSIONS UNLESS OTHERWISE SPECIFIED ± 1/32
CALC. WT. — ACT. WT.
SCALE 6" & 12" = 1'-0"
AC
NAVY NOTED — NOTED — NOTED — NOTED
MATERIAL — SPEC. — HEAT TREAT — FINISH
DRAFT 50.1 10-23-36 — CHECK [illegible] MILLER 8-21-37 — EXAM. — ENG.
CONSOLIDATED AIRCRAFT CORP. BUFFALO, N.Y.
STAMP PT. No. WHERE SHOWN
NAME: BELTFRAME - HULL SUPERSTRUCTURE STA. #4.25
OPP. HAND
SIZE G — DWG. 28B1146

	SUPPLIES & EQUIPMENT CLASSIFICATION		
	ALTERATION	DATE	BY
B	TRACED UP TO DATE	9-20-37	H.W.
C	28B1463 CHANGED TO TOP OF DECK SKIN	1-18-38	[illegible]
D	AN442-B5 WITH AN442-D6, TO AN442-D5 ADD NOTE "THIS RIVET ONLY" NO WT. CHG. E.O. A-18755	3-6-42	[illegible]
E	REPLACED NOTE "SPEC. AGA9 COND T AL ALLOY EXTR. 7/8 - 3/16" .060 BULB ANGLE DIE "K1559 -10 -11 -12 -13" WITH "MAT'L FOR -10, -11, -12, -13 TO BE Y-5-AST" WT. CHG. +1.0045	5-1-42	[illegible]
F	ADDED TO MAT'L. NOTE FOR -10 -11, -12, & -13 "OR K1559, AL. AL. EXTR., SPEC. QQ-A-354-T." (NO WT CHG.)	10-16-42	LARSEN

34 11/32 — 14 3/4 — 4 3/8 — 1 — 5 — 5 — 5 — 5 — 5 — 5 — SYMMETRICAL ABOUT ℄ OF HULL

1 15/32 — 5 5/8

(REF) 28B1490
(REF) 28B1491-3
(REF) 28B1483
(REF) 28B1480-L.H. 28B1480-1 R.H.
(REF) 28B1156-L.H. 28B1156-1 R.H.
(REF) 28B1149-L.H. 28B1149-1 R.H.

-2 L.H. -3 R.H. — -10 L.H. -11 R.H. — -4 L.H. -5 R.H.

4 17/32 — 5 3/16 — 6 1/2 — 8 3/32 — 10 3/32 — 12 3/16 — 14 11/16 — 19 3/8 — 13 3/4 — 11 3/8 — 12 1/2 — 11 1/2 (REF) — 11 15/16 — 1/16 — 1/2 — 1/4 — 1/8

.030 HULL PLATING (REF)
28B1485 (REF)
CUT OFF AT 45°
(REF) 28B1484
.030 PLATING - (REF.)
WING CONTOUR
68 1/8 R.
27 3/32 R.
61 1/4 R.

L.H. -12 R.H. -13 — L.H. -6 R.H. -7

AN442-D6 — 04305-D5 — 25 17/64

-8 L.H. -9 R.H.

(C) 28B1463

(D) AN442-D6

(D) AN442-D5 THIS RIVET ONLY

VIEW LOOKING FORWARD PORT SIDE SHOWN

SECTION A-A
SCALE 12"/12"

LIST OF DASH NOS & MATERIAL FROM WHICH THEY ARE MADE

-2, 3, 4, 5, 6, 7, 8, 9, 1 1/2 x 1 1/2 x .030 ANGLE MAKE FROM AL. ALLOY SHEET SPEC. 47A10 COND. A. H.T. 3R-53 CONDT

MAT. FOR -10, -11, -12, & -13 TO BE Y-5-AST, OR K1559, AL. AL. EXTR., SPEC. QQ-A-354-T. (E) (F)

ALL OUTSIDE RIVETS 04305-04
ALL INSIDE RIVETS AN442-D5
EXCEPT WHERE OTHERWISE SPECIFIED

BEND FLANGES OF ANGLES AS PER 28B036

GO-GREEN PRIME [redacted] FINISH CODE

FINISH:
Z-P-2GP ON PBY-1
Z-P-2GP ON PBY-2
& FUTURE

28-5MM	28B5005		1			28B1463	2	2	2
28-5MC			1			-13	1	1	1
28-5MH			1			-12	1	1	1
28-5ME			1			-11	1	1	1
28-5MC			1			-10	1	1	1
28-5MA			1			-9	1	1	1
PBY-5B			1			-8	1	1	1
PBY-5A			1			-7	1	1	1
PBY-4	28B5005		1			-6	1	1	1
PBY-3	28B1005				04305-05	-5	1	1	1
PBY-2	28B1005				*04305-04	-4	1	1	1
PBY-1	28B1005				AN442-06	-3	1	1	1
					AN442-05	28B1467-2	1	1	1

C-70496-77713-
88476 (NOS) 44
MCE215

REPLACES 28B147 & 28B148	APPROVED	DATE 9-20-37	O.M.	MODEL	NEXT ASSY. REQ.
REPLACED BY	CALC. WT 1.03	ACT. WT	REQUIREMENTS PER AIRPLANE		
LIGHT OR DIMENSIONS UNLESS OTHERWISE SPECIFIED ± 1/32	SCALE 6"=1'-0"				
	AC				
	NAVY NOTED		NOTED	NOTED	NOTED
	MATERIAL		SPEC.	HEAT TREAT	FINISH

MAT.	PARTS LIST PER ASSY.
	28-5MM 28-5MC 28-5MH 28-5ME 28-5MC 28-5MA PBY-5B PBY-5A PBY-4 PBY-3 PBY-2 PBY-1
	28B1463 28B1467-2
	28B5005 28B1005
	04305-05 04305-04 AN442-06 AN442-05

DRAFT	CHECK	ENGR.
11-4-35	5-8-37	

CONSOLIDATED AIRCRAFT CORP. BUFFALO, N. Y.
STAMP FT. No. WHERE SHOWN

NAME BELTFRAME-HULL-SUPERSTRUCTURE STA. 378

SHOP HAND

G 28B1[illegible]

147

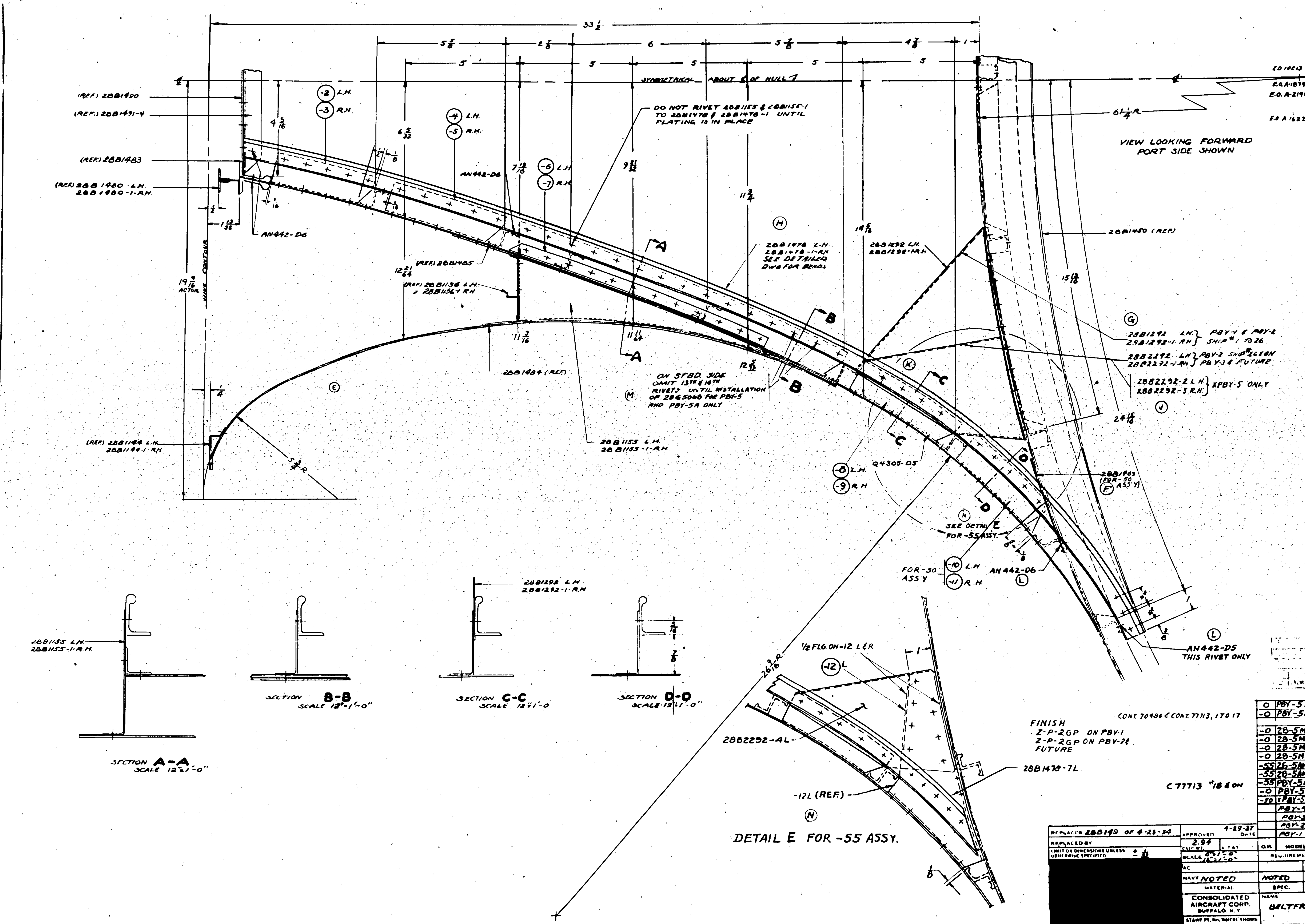

LET	ALTERATION	DATE	BY
D	TRACED UP TO DATE	4-29-37	CLARK
E	REMOVED AN320-D10-8 (WAS 2 REQ)	8-23-37	
F	CORRECT DWG TO SHOW 28B1463 ON TOP OF DECK SKIN	1-18-38	
G	28B2292 WAS 28B1292 (CO#5374 & 5390)	1-18-38	GERBER
H	ADDED NOTE ON 28B1478 & -1 TO "SEE DETAILED DWG FOR BENDS"	1-18-38	GERBER
J	ADDED 28B2292-2 & -3	9/9/39	
K	RIVET REQ. (4) WAS (5)	11-27-40	
L	ADDED AN442-D5 ON FACE OF DRG (NO WT CHG)	3-7-42	
M	CHGD NOTE "ON STBD SIDE OMIT 6TH 7TH & 8TH RIVET---" TO "ON STB'D SIDE OMIT 13TH & 14TH RIVET---". NO WT CHG	3-7-42	
N	CREATED -55 ASS'Y. ADDED DETAIL "E" WT CHG NEG	3-7-42	

E.D. 10213
E.O. A-18795
E.O. A-21969
E.O. A 16225

LIST OF DASH No.S & MATERIAL FROM WHICH THEY ARE MADE

SPEC. 47A10 COND. A AL. ALLOY SHEET. (24SO)
1 1/2 × 1/2 × .030 ANGLE
H.T. -3 R.53 COND. T
-2-3-4-5-8-9-10-11
SPEC. 46A9 - COND. T AL. ALLOY EXTRUSION.
9/16 × 9/16 × .040 PLAIN ANGLE - DIE #X-6240
-6-7.
SPEC. 47A8-T. ALCLAD
-12L & R .051 × 9 1/2 × 4 1/2

ALL OUTSIDE RIVETS Q4305-D4
ALL INSIDE RIVETS AN442-D5
EXCEPT WHERE OTHERWISE SPECIFIED.
BEND FLANGES OF ANGLES AS PER CHART 28B036

FINISH
Z-P-2GP ON PBY-1
Z-P-2GP ON PBY-2 & FUTURE

CONT. 70496 & CONT. 77713, 1 TO 17

C 77713 #18 & ON

Part	Quantities
28B2292-4R	1
28B2292-4L	1
28B1478-7R	1
28B1478-7L	1
28B2292-3	1
28B2292-2	1
28B2292-1	1
28B2292	1
28B1478-1	1, 1, 1
28B1478	1, 1, 1
28B1292-1	1
28B1292	1
28B1155-1	1, 1, 1, 1
28B1155	1, 1, 1, 1
28B1463	2, 2, 2

O.H.	MODEL	NEXT ASSY		PARTS	Quantities
O	PBY-5B	28B5005	1	-11	1, 1, 1
-O	PBY-5A		1	-10	1, 1, 1
				-9	1, 1, 1, 1
-O	28-5MA		1	-8	1, 1, 1, 1
-O	28-5MC		1	-7	1, 1, 1, 1
-O	28-5ME		1	-6	1, 1, 1, 1
-O	28-5MN		1	-5	1, 1, 1, 1
-55	28-5AMC		1	-4	1, 1, 1, 1
-55	28-5AMN		1	-3	1, 1, 1, 1
-55	PBY-5A		1	28B1149-2	1, 1, 1, 1
-O	PBY-5	28B5005		-12R	1
-50	XPBY-5	28B1005		-12L	1
	PBY-4	28B1005		Q4305-D5	
	PBY-3	28B1005		Q4305-D4	
	PBY-2	28B1005		AN442-D5	
	PBY-1	28B1005		AN442-D8	

REQUIREMENTS PER AIRPLANE — PARTS LIST PER ASSY. — PBY 2-3-4, PBY-5, -55

REPLACES 28B149 OF 4-23-34	APPROVED 4-29-37 DATE
REPLACED BY	CALC. WT. 2.94
LIMIT ON DIMENSIONS UNLESS OTHERWISE SPECIFIED ± 1/64	SCALE 6"=1'-0" 12"=1'-0"
NAVY NOTED MATERIAL	NOTED SPEC.
NOTED HEAT TREAT	NOTED FINISH
DRAFT B.O.I. 12-16-36	CHECK 6-14-37
CONSOLIDATED AIRCRAFT CORP. BUFFALO, N.Y.	NAME: BELTFRAME-HULL-SUPERSTRUCTURE STA. #4.50
STAMP PT. No. WHERE SHOWN	OPP HAND
DWG SIZE G	28B1149

R-28B1149

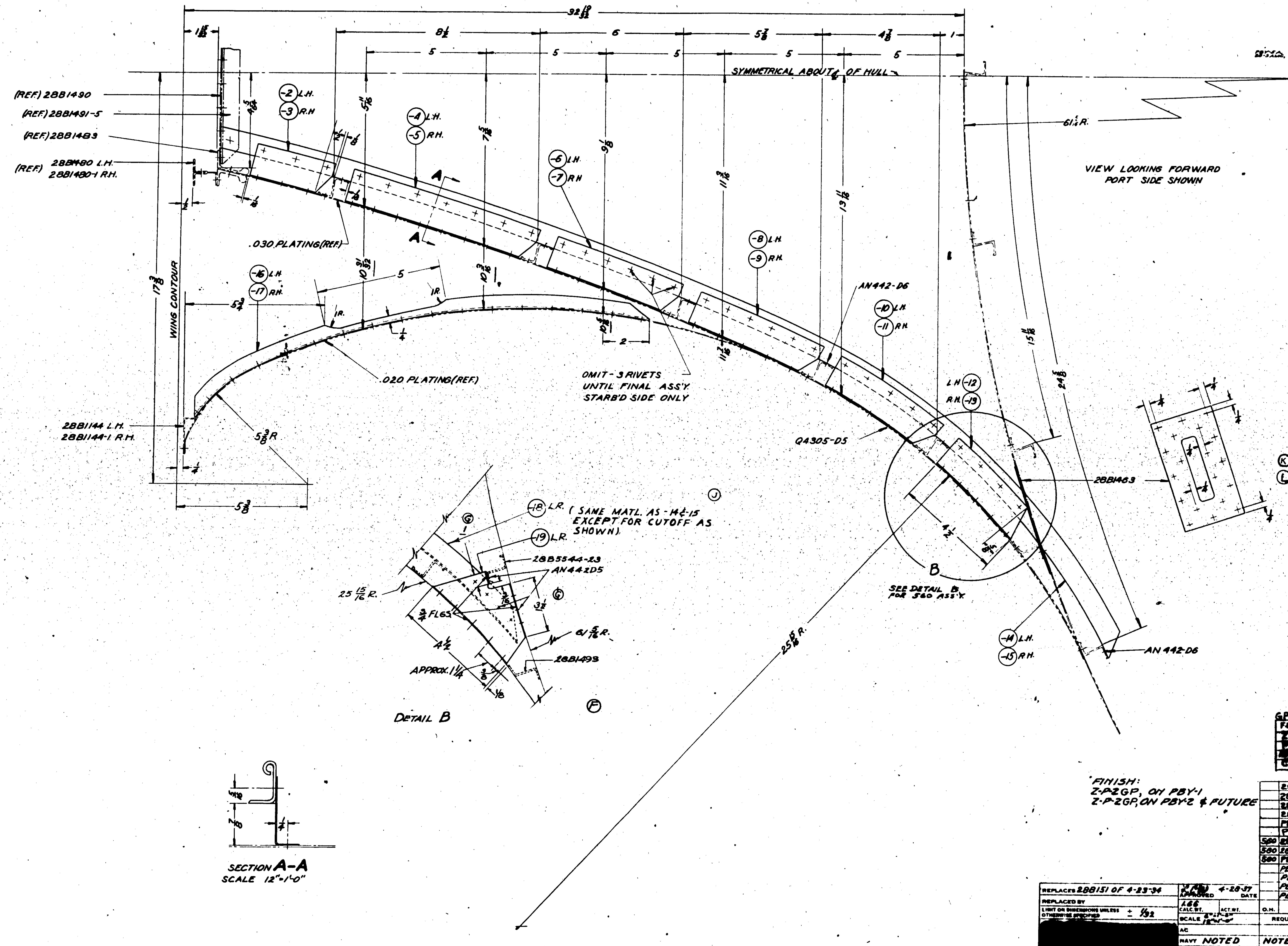

LET	ALTERATION	DATE	BY
D	TRACED TO DATE	4-28-37	[illegible]
E	28B1463 WAS INSIDE OF SKIN	1-20-38	[illegible]
F	ADDED 560 ASS'Y. & DETAIL B FOR PBY-5A - 28-5AMC & OA-1	[illegible]	[illegible]
G	DIM. 1 WAS 3/8, & 3 1/2 WAS 2 7/8	7-2-41	LAWSON
H	ADDED PARTS TO -560 ASS'Y.- 28B1151-2 THRU-11, -16 & -17 (1 EA) & 28B1463 (2)	9-17-41	[illegible]
J	ADDED MAT'L FOR -19L-19R & NOTE "SAME MATL AS -14 & -15 EXCEPT FOR CUT-OFF AS SHOWN" (NO WT CHG)	9-5-42	PARSH
K	ON FACE OF DWG. REPLACED "SPEC. 46A9-COND T. AL ALLOY EXTR. 7/8 X 9/16 X .060 BULB ANGLE DIE "K-1559 -14, -15, -18L, -18R" WITH "MAKE -14, -15, -18L/R FROM Y-5-A5T" & REPLACED "SPEC 46A9-COND T. AL ALLOY EXTR. 9/16 X 9/16 X .040 PLAIN ANGLE DIE "K-6240 -16, -17" WITH "MAKE -16 & -17 FROM Y-2-A12T" (NO WT CHG)	5-6-43	[illegible]
L	ADDED ALT. TO MAT. NOTE FOR -14, -15, & 18 L/R "OR K1559, AL. AL EXT., SPEC. QQ-A-354-T" FOR -16 & -17 "OR K6240, AL. AL. EXT. SPEC. QQ-A-354-T" NO WT CHG	10-15-43	CRAIG

LIST OF DASH NO'S. AND MATERIAL FROM WHICH THEY ARE MADE.

SPEC. 47A10-COND A - AL. ALLOY SH'T. H.T. - SR-53 COND T
1 7/16 x 1/2 x .030 ANGLE.
-2-3-4-5-6-7-8-9-10-11-12-13

MATERIAL NOTE:
(K) MAKE -14, -15, -18L, -18R FROM:
(L) (A) Y-5-A5T, OR
(B) K1559, AL. AL EXT., SPEC. QQ-A-354-T.
MAKE -16 & 17 FROM:
(A) Y-2-A12T, OR
(B) K6240, AL. AL. EXT. SPEC.-QQ-A-354-T.

ALL OUTSIDE RIVETS Q4305-D4
ALL INSIDE RIVETS AN442-D5 EXCEPT WHERE OTHERWISE SPECIFIED.

SPEC. 47A8 AH.T. SR58 .040 ALC. SHT. -19L -19R

BEND FLANGES OF ANGLES AS PER CHART 28B036

GP-GREEN PRIME
FINISH CODE
[redacted]

FINISH:
Z-P-2GP, ON PBY-1
Z-P-2GP, ON PBY-2 & FUTURE

PART NO.			PBY-3	560 (H)
19R				1
19L				1
18R				1
18L				1
Q4305-D5				
Q4305-D4				
AN442-D6				
AN442-D5				
28B1463	2	2	2	2
-17	1	1	1	1
-16	1	1	1	1
-15	1	1	1	
-14	1	1	1	
-13	1	1	1	
-12	1	1	1	
-11	1	1	1	1
-10	1	1	1	1
-9	1	1	1	1
-8	1	1	1	1
-7	1	1	1	1
-6	1	1	1	1
-5	1	1	1	1
-4	1	1	1	1
-3	1	1	1	1
28B1151-2	1	1	1	1

O.H.	MODEL	NEXT ASSY.	REQ.
	28-5MN	28B5005	
	28-5ME		
	28-5MC		
	28-5MA		
	PBY-5B		
	PBY-5		
560	28-5AMN		
560	28-5AMC		
560	PBY-5A	28B5005	
	PBY-4	28B1005	
	PBY-3	28B1005	
	PBY-2	28B1005	
	PBY-1	28B1005	

REQUIREMENTS PER AIRPLANE — MAT. — PARTS LIST PER ASSY.

REPLACES 28B151 OF 4-23-34
REPLACED BY
LIMIT ON DIMENSIONS UNLESS OTHERWISE SPECIFIED ± 1/32
[redacted]

APPROVED [illegible] DATE 4-28-37
CALC. WT. 1.66 ACT. WT.
SCALE 6"=1'-0" 12"=1'-0"
AC
NAVY NOTED — MATERIAL | NOTED — SPEC. | NOTED — HEAT TREAT | NOTED — FINISH
DRAFT B.O.I. 1-14-35 | CHECK 5-10-37 Miller | EXAM.

CONSOLIDATED AIRCRAFT CORP. BUFFALO, N.Y.
STAMP PT. No. WHERE SHOWN
NAME: BELTFRAME - HULL - SUPERSTRUCTURE STA. # 4625
OPP. HAND
G 28B1151

28B1151

SUPPLIES & EQUIPMENT CLASSIFICATION			
LET	ALTERATION		
D	TRACED	[redacted]	
F	CORRECTED DWG TO SHOW AN931-6 ON TOP OF DASH SKIN.	[redacted]	
E.O. A-18795	F AN442-D5 THIS RIVET ONLY, WAS AN442-D6 NO WT. CHG.	2-7-52	[redacted]
E.O. A-17626A	G CREATED -55 ASSY. ADDED: [illegible]	2-7-52	[redacted]
	[illegible]	2-7-52	[redacted]
	H IN 28-55 ASSY. REMOVED (2) REQ. FROM: 28B1132-108-11 & (2) REQ. FROM -12. NO WT CHG	9/28/53	[redacted]

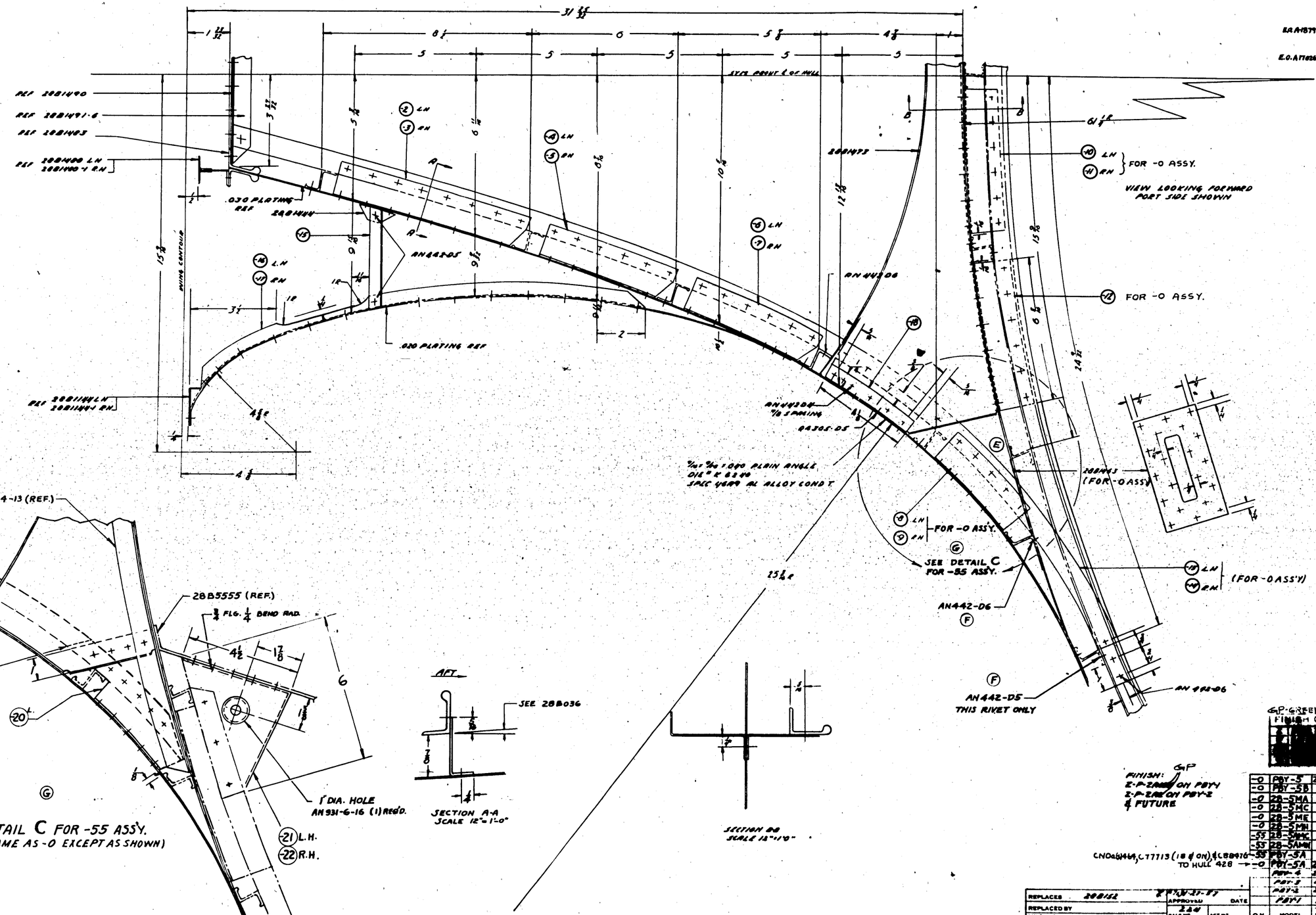

2%x1 2%x1.090 PLAIN ANGLE DIE "K 6240 SPEC 4689 AL ALLOY COND T

LIST OF DASH NO'S AND MATERIAL FROM WHICH THEY ARE MADE

SPEC 4689 COND A AL ALLOY SHT NT 3R 53 COND T
1/8 - 1.030 .
2-3-4-5-6-7-8-9-10-11-12

SPEC 4689 COND T AL ALLOY EXTRUSION
2%x1 2%x.060 BULB ANGLE DIE "K 1559
-13-14

SPEC 4689 COND T AL ALLOY EXTRUSION
2%x1 2%x.040 PLAIN ANGLE DIE "K 6240
-15-16-17-18
SPEC 4689-T AS1 x7 3/4 x3 3/8 -20 L&R
.051 x5 3/4 x6 1/2 -21 & -22

ALL OUTSIDE RIVETS @ 4705-04
ALL INSIDE RIVETS AN442-05 EXCEPT WHERE OTHERWISE SPECIFIED

BEND FLANGES OF ANGLES AS PER 28B036

AN931-6-16							1		
-22							1		
-21							1		
-20R							1		
-20L							1		
-19R							1		
-19L							1		
4705T-04							-		
4705T-04							-		
AN442-06							-		
AN442-05							-		
AN442-08							-		
28B493	1	1	1	1			-		
28B493-5	1	1	1	-			-		
28B494	2	2	2	2			-		
-10	2	2	2	2			-		
-11	1	1	1	1			-		
-16	1	1	1	1			-		
-15	2	2	2	2			-		
-14	1	1	1	-			-		
-13	1	1	1	-			-		
-12	2	2	2	-			-		
-11	1	1	1	-			-		
-10	1	1	1	-			-		
-9	1	1	1	-			-		
-8	1	1	1	-			-		
-7	1	1	1	-			-		
-6	1	1	1	-			-		
-5	1	1	1	-			-		
-4	1	1	1	-			-		
-3	1	1	1	-			-		
-2	1	1	1	-			-		
-1	1	1	1	-			-		

GP-GREEN PRIME FINISH COD: [redacted]

FINISH: GP
2-P-2 ON PBY-1
2-P-2 ON PBY-2
& FUTURE

-0	PBY-5	28B5005		1			
-0	PBY-5B			1			
-0	28-5MA			1			
-0	28-5MC			1			
-0	28-5ME			1			
-0	28-5MH			1			
-55	28-5MC			1			
-55	28-5MH			1			
-55	PBY-5A			1			
-0	PBY-5A	28B5005		1			
	PBY-6	28B1004					
	PBY-2	28B1004					
	PBY-2	28B1004		1			
	PBY-1	28B1005		1	28B1152-2		

C/NO 4444, C.T.T. 13 (18 # ON) & LB8916 -0 TO HULL 428

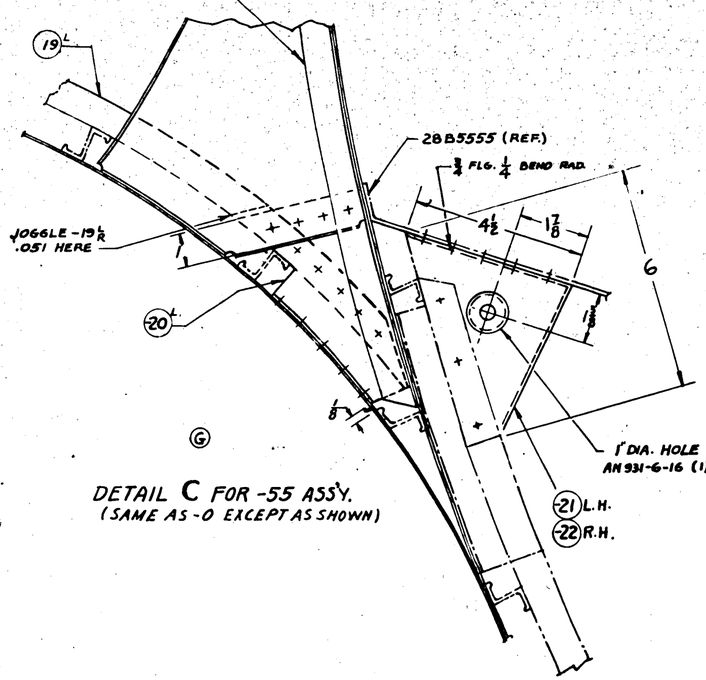

DETAIL C FOR -55 ASS'Y.
(SAME AS -0 EXCEPT AS SHOWN)

SECTION A-A
SCALE 12"=1'-0"

SECTION BB
SCALE 12"=1'-0"

REPLACES 28B152									
REPLACED BY									
LIGHT OR SHEETWORK UNLESS OTHERWISE SPECIFIED	± 1/64								
SCALE 3/4"-1'-0"									
AC									
MAYN	NOTED	NOTED		NOTED	NOTED				
MATERIAL		SPEC.	HEAT TREAT		FINISH				

APPROVED [redacted] DATE 3-20-47
CALC WT. [redacted] ACT. WT.

O.H.	MODEL	NEXT ASSY.	REQ.	STD PARTS
	PBY-1	28B1005	1	28B1152-2

REQUIREMENTS PER AIRPLANE | MAT. | PARTS LIST PER ASSY

CONSOLIDATED AIRCRAFT CORP. BUFFALO, N.Y.

STAMP PT. No. WHERE SHOWN

NAME BEETFRAME HULL SUPERSTRUCTURE STA 4.85

OPP. HAND

SIZE G

28B1[illegible]

SUPPLIES & EQUIPMENT CLASSIFICATION			
LET	ALTERATION	DATE	BY
B	TRACED UP TO DATE	4-30-37	H.W.
C	CORRECTED TO SHOW 28B1443 ON TOP OF DECK SKIN.	1-11-38	"
D	E.O. A14061 ADDED -55 ASS'Y, -19L&R, -20L&R TO FACE 6 B/M. ADDED VIEW 'B' & SPECS. FOR -19 & -20 TO FACE	10-8-41	
	ADDED WGT. CHANGE FOR -55 ASS'Y		

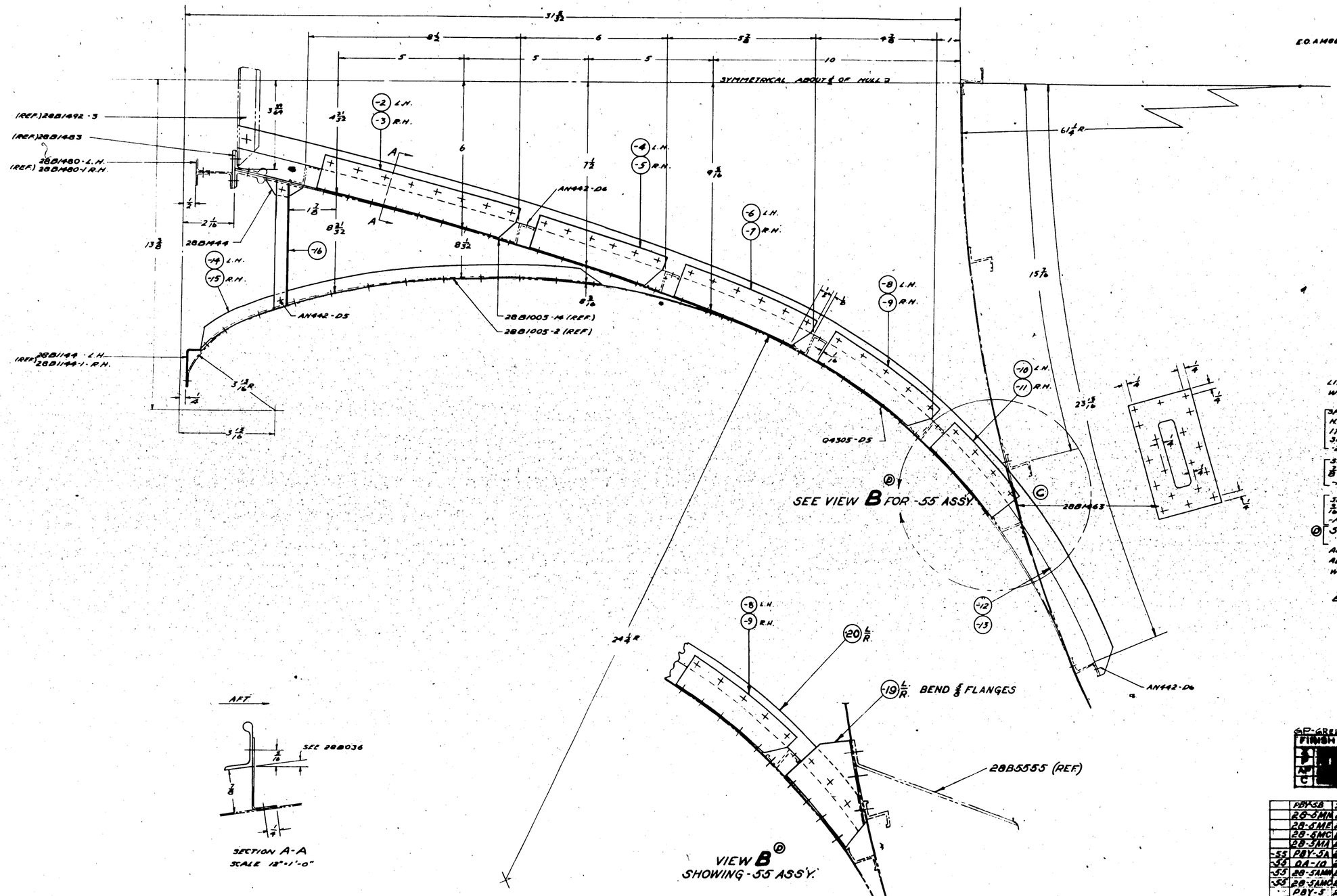

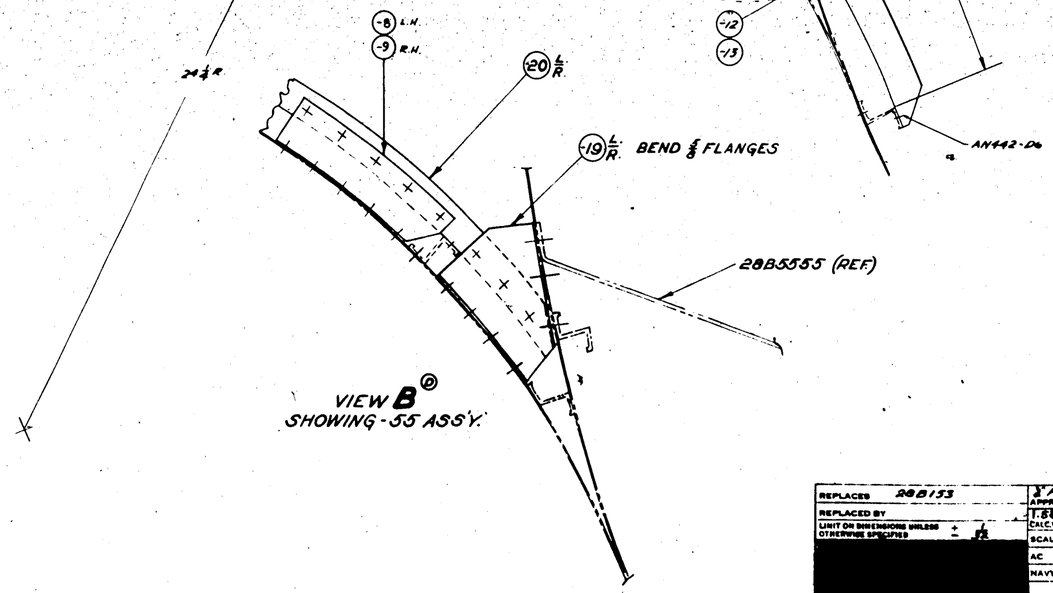

LIST OF DASH NO'S AND MATERIAL WHICH THEY ARE MADE

SPEC. 47A10-COND. A-AL. ALLOY SHEET NT.-SR-53 (COND. T) 1 7/8 x 1 1/4 x .030 ANGLE-MAKE FROM ALUM. ALLOY SHEET. MATERIAL & HEAT TREAT. -2 -3 -4 -5 -6 -7 -8 -9 -10 -11

SPEC. 46A9-COND. A. AL. ALLOY EXTRUSION 3/8 x 9/16 x .060 BULB ANGLE DIE "K-1559, - 20L&R -12 -13 H.T. SPEC. SR-53A ②

SPEC. 46A9-COND. T. AL. ALLOY EXTRUSION 3/16 x 3/8 x .040 PLAIN ANGLE DIE "K-6240 -14 -15 -16

② SPEC. 47A8 — .040 — ALC. SHEET - 19L&R H.T. SPEC. SA53T

ALL OUTSIDE RIVETS Q4305-D4
ALL INSIDE RIVETS AN442-D5 EXCEPT WHERE OTHERWISE SPECIFIED.

BEND FLANGES OF ANGLES AS PER 28B036

FINISH:- GP
Z-P-2 ON PBY-1
GP
Z-P-2 ON PBY-2 & FUTURE

	28B1443	28B1444	28B1153-20A	-20B	-19C	-19A	-16	-17	-14	-15	-12	-13	-8	-9	-6	-7	-4	-5	-2	-3	-10	-11
	2	2					2	2	2	2	2	2	1	1	1	1	1	1	1	1	1	1
	2	2					2	2	2	2												
			2	2	2	2																

GP-GREEN PRIME
FINISH CODE
S [redacted]
P
AP
C

	PBY-5B	28B3005	1																			
	28-5MA	28B5005	1																			
	28-5ME	28B5006	1																			
	28-5MC	28B5005	1																			
	28-5MA	28B5004	1																			
-55	PBY-5A	28B5004	1																			
-55	QA-1A	28B5005	1																			
-55	28-5MM	28B5005	1	28B1153-2	/	/	/	/														
-55	28-5MC	28B5004	1																			
	PBY-5	28B1004	1																			
	PBY-4	28B1004	1	Q4305-D5																		
	PBY-3	28B1005	1	Q4305-D4																		
	PBY-2	28B1005	1	AN442-D6																		
	PBY-1	28B1005	1	AN442-D5																		

LET	ALTERATION	DATE	BY	LET	ALTERATION	DATE	BY
				J	TRACED NO WT. CHG.	9-2-43	WOLFE

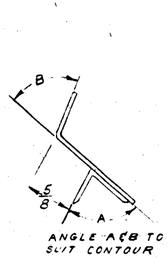

ANGLE AEB TO SUIT CONTOUR

SECTION **DD**
SCALE 12"=1'-0

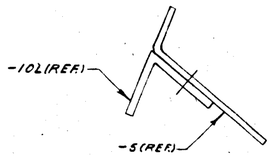

SECTION **AA**
SCALE 12"=1'-0

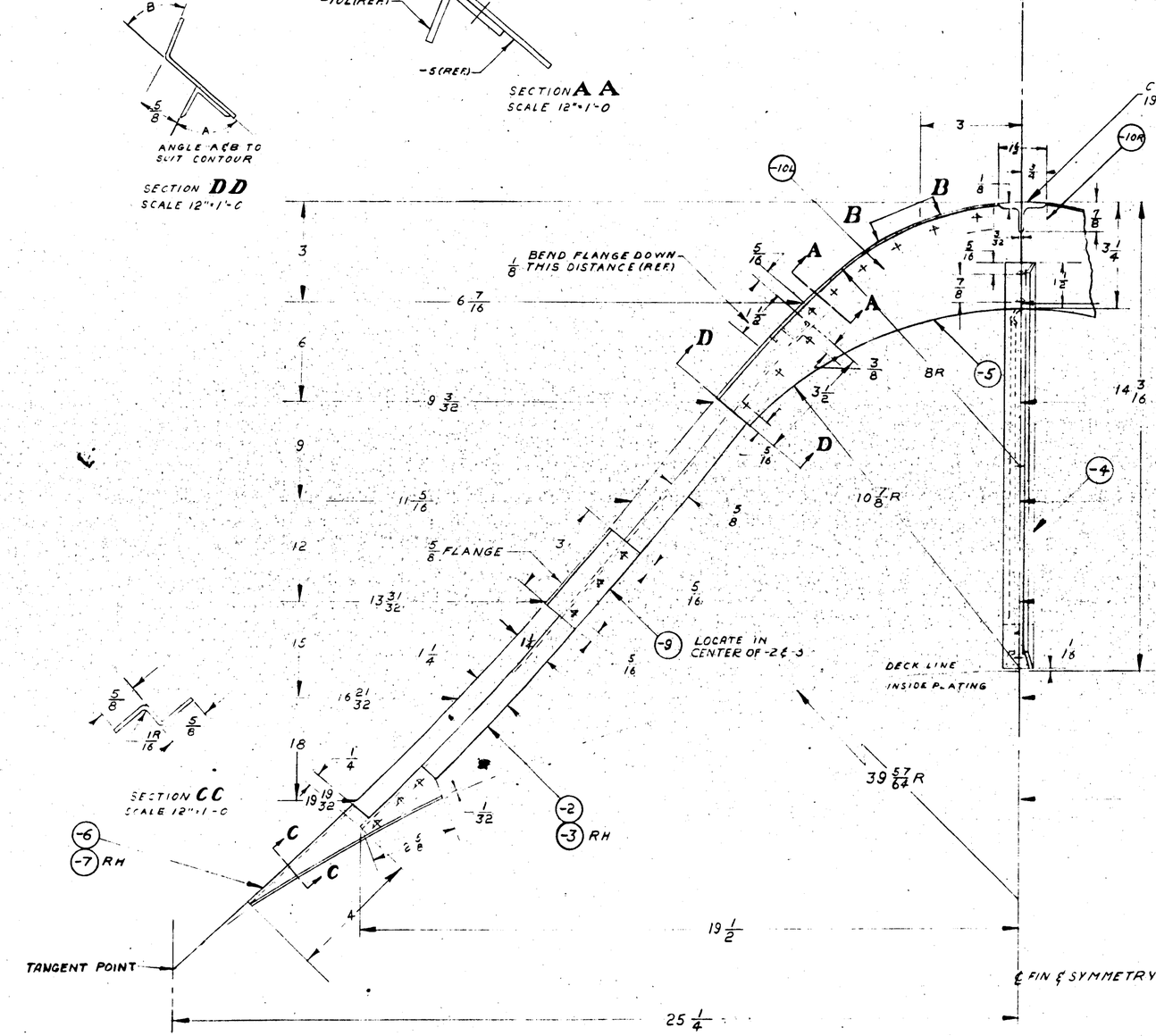

SECTION **CC**
SCALE 12"=1'-0

VIEW **BB**
SCALE 12"=1'-0

MIL(3)H64 MCR # 178-12
C #91876 #346 & ON

C #70496 #77713, 88476 ONLY
C #70496, #91876, #1 TO 345

FINISH CODE	
Z	ANODIC TREATMENT
P	P-21 PRIMER
GP	GREEN PRIMER
C	CADMIUM PLATE

RIVETS (SIZE INDICATED AT INTERVALS BY THE FOLLOWING MARKINGS)
= 3/32 = 1/8 = 5/32
= 3/16 = 1/4 = 5/16
= 3/8

PART No	STOCK	MATERIAL	SPEC.	LH REQ.	RH REQ.	LH REQ.	RH REQ.	LH REQ.	RH REQ.	LH REQ.	RH REQ.
-50	PBY-5A	28B1006	/								
-50	PBY-5	28B1006	/	AN442-06							
	28-5AMM	28B1006	/	AN442-04							
	28-5AMC	28B1006	/								
	28-5MN	28B1006	/								
	28-5ME	28B1006	/								
	28-5MC	28B1006	/								
	28-5MA	28B1006	/								
	PBY-5B	28B1006	/								
	PBY-5A	28B1006	/								
	PBY-5	28B1006	/								
	PBY-4	28B1006	/								
	PBY-3	28B1006	/								
	PBY-2	28B1006	/								
	PBY-1	28B1006	/								
-10R	MAKE FROM Y-2-A23T X 7				1						
-10L	MAKE FROM Y-2-A23T X 7				1						
-9	.040 X 2 X 3 1/8	AL AL SHT	2-A-355T	2							
-8	.040 X 1 Y 2 7/8	AL AL SHT	2-A-355T	1		1					
-7	.040 X 3 1/4 X 7	AL AL SHT	2-A-355T	1		1					
-6	.040 X 3 1/4 X 7	AL AL SHT	2-A-355T	1		1					
-5	.040 X 7 1/4 X 13 3/4	AL AL SHT	2-A-355T	1		1					
-4	MAKE FROM Y-2-A6T X 21					1					
-3	MAKE FROM Y-2-A6T X 21					1					
-2	MAKE FROM Y-2-A6T X 21					1					

ASSY DASH NO.	MODEL	NEXT ASSY	REQ.
REQUIREMENTS PER AIRPLANE			

REPLACES 28B1174 OF 3-8-37 | 70 EACH WT.
REPLACED BY | ACT. WT.
LIMIT DIMENSIONS UNLESS OTHERWISE SPECIFIED .015 F/2 | SCALE 2"=1'-0 | NOTED
STAMP PART NUMBER WHERE SHOWN

PARTS LIST PER ASSY. -0 -50 -3 -4 -5

A C / NAVY		J.W.L.	ANGE-RAPP	GREEN		LC.W.
	Z-P-GP	2-2-37	3-10-37	4-5-36		4-13-36
HEAT TREAT	FINISH	DRAFT	CHECK	STRUCT	MAT.	APPROV	ENG

NAME FORMER-HULL LOWER FIN NOSE STA. 8.33
OPP. HAND
DWG. SIZE G | 28B1174

CONSOLIDATED VULTEE AIRCRAFT CORP. SAN DIEGO DIVISION . . SAN DIEGO, CALIF.

28B1174

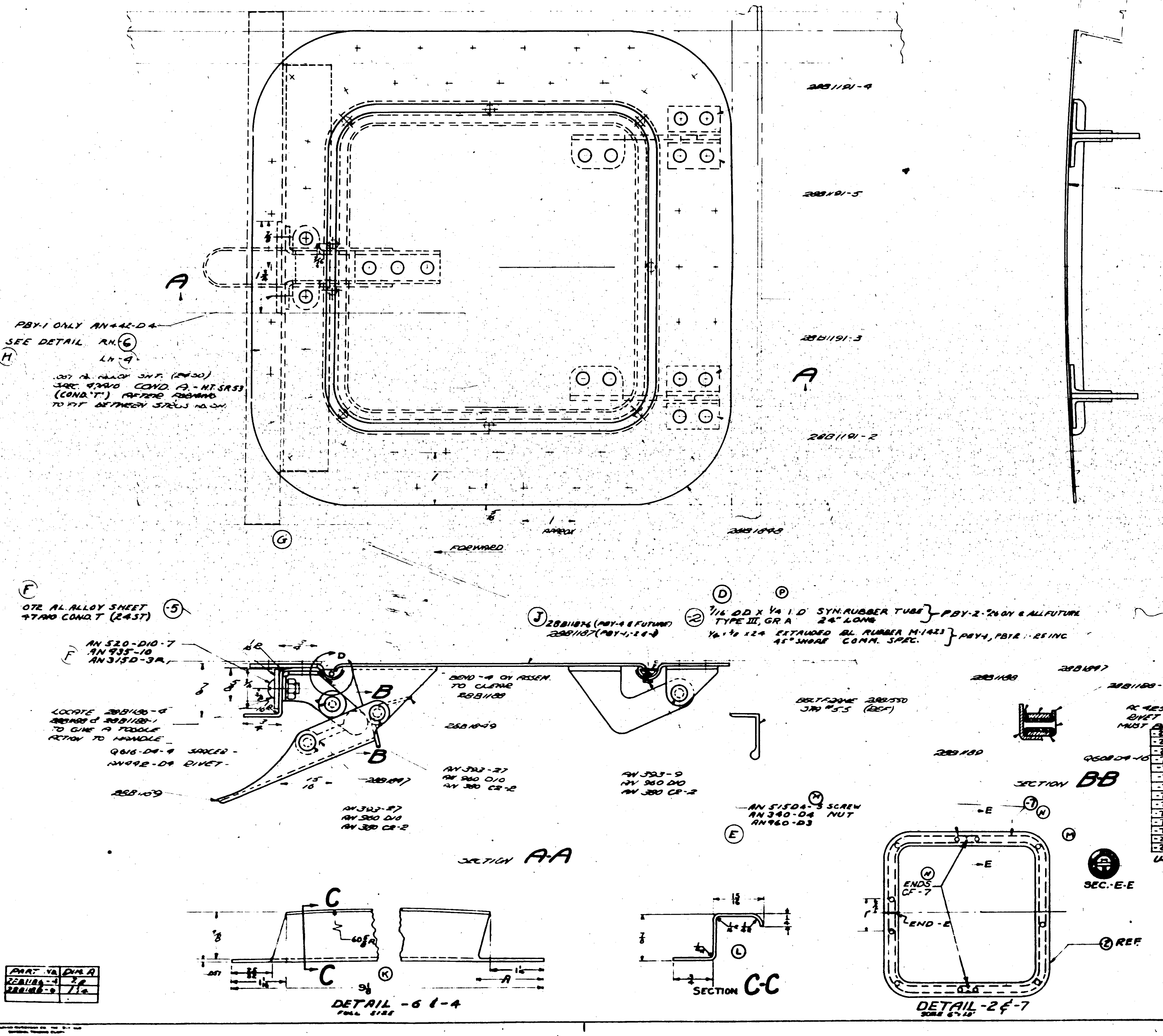

PART NO.	DIM. A
28B1186-4	2 1/2
28B1186-6	1 1/4

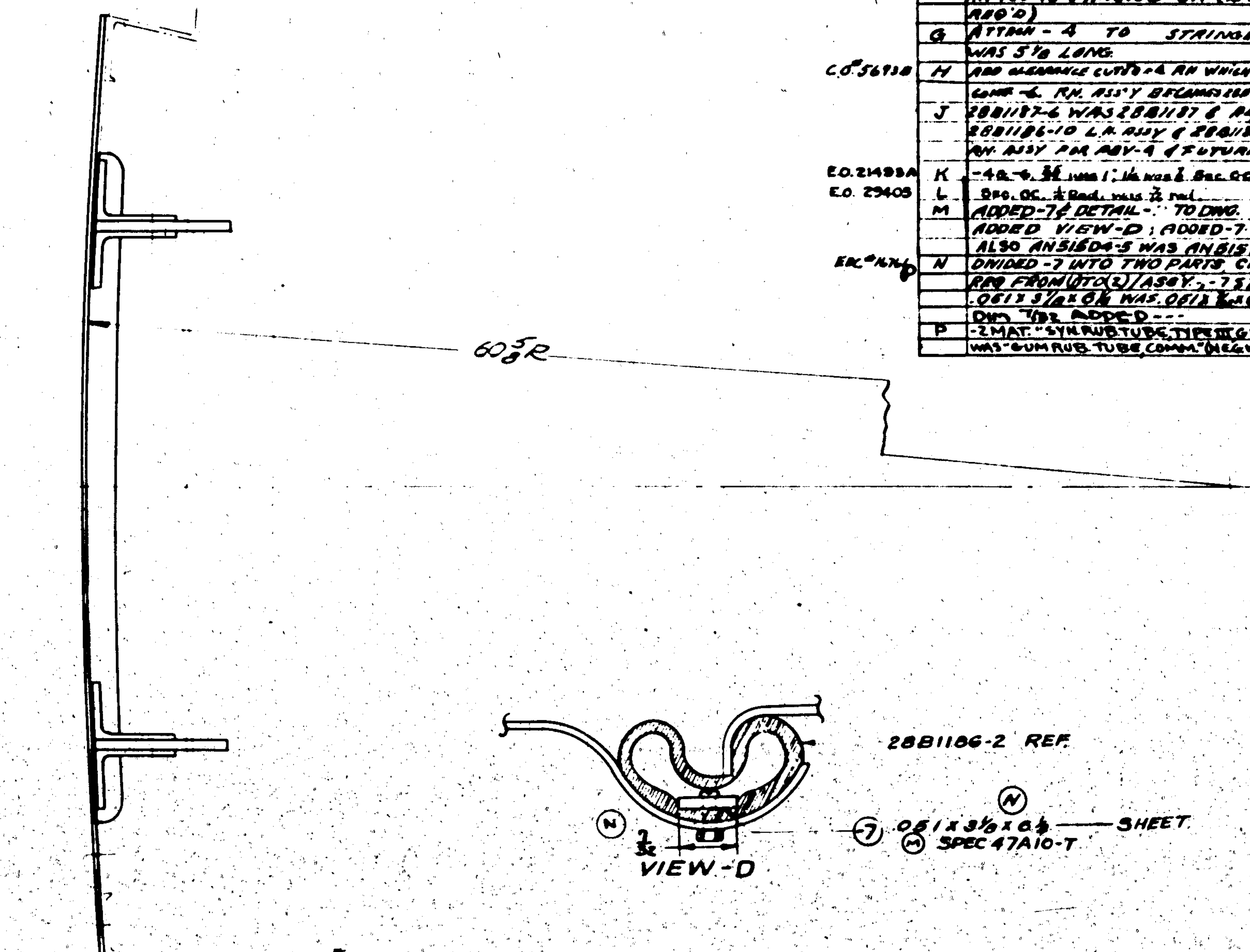

FINISH:-
Z-P-2 ... ON PBY-1
Z-P-2 ... ON PBY-2 & FUTURE

NOTE:
CEMENT -2 TO 28B1848
ALL RIVETS Q4305D4
UNLESS OTHERWISE NOTED

SUPPLIES & EQUIPMENT CLASSIFICATION

	LET	ALTERATION	DATE	BY
	C	TRACED U/O TO DATE	4-29-37	
C.O.#5762C	D	-2 WAS 1/2 x 3/4 EXT. BL. RUBBER SPEC. M-1423, COMM. SPEC.	1-27-38	
C.O.#5390	E	ATTACH -2 TO 28B1848 WITH CEMENT & AN515-D4-4, AN340-D4, & AN960-D3 (9 EA. REQ'D)	1-29-38	
C.O.5306A	F	ADD -5 (1 REQ'D); AN520-D10-7, AN935-10 & AN315D-3R (2 EA. REQ'D)	1-27-38	
	G	ATTACH -4 TO STRINGERS WAS 5 1/8 LONG	1-27-38	
C.O.#5693B	H	ADD CLEARANCE CUTS ON -4 AN WHICH BECOME -6 R.H. ASS'Y BECAME 28B1186-1	1-27-38	
	J	28B1187-6 WAS 28B1187 & ADD 28B1186-10 L.H. ASSY & 28B1186-11 RH. ASSY FOR PBY-4 & FUTURE	1-27-38	
E.O.21493A	K	-4 & -6 ...	4-11-40	
E.O. 29405	L	Spec. CC. ... Rad. was ... rad.		
	M	ADDED -7 & DETAIL - TO DWG. & ADDED VIEW-D; ADDED -7 TO ... ALSO AN515D4-5 WAS AN515D4-4	7-9-41	
	N	DIVIDED -7 INTO TWO PARTS, CHG'D REQ FROM (1) TO (2)/ASSY., -7 STOCK .051 x 3 1/8 x 6 1/2 WAS .051 x ... DIM 7/32 ADDED ---	8-21-41	
	P	-2 MAT. "SYN RUB TUBE TYPE III GR A" WAS "GUM RUB TUBE COMM." ...	8-29-42	

FINISH CODE

Z	[redacted]
P	[redacted]
AP	[redacted]
C	[redacted]

DASH NO.	MODEL	NEXT ASSY	REQ
-2	28-5MN	28B4142	1
-2	28-5MA	28B4142	1
-2	28-5MC	28B4142	1
-7	28-5AMC	28B4142	2
-7	28-5AME	28B4142	2
-7	28-5MN	28B4142	2
-7	28-5MC	28B4142	2
-7	28-5ME	28B4142	2
-7	28-5MA	28B4142	2
-7	PBY-5B	28B4142	2
-7	PBY-5A	28B4142	2
-7	PBY-5	28B4142	2
-2	28-5AMC	28B4142	1
-2	28-5ME	28B4142	1

C-91876

USE FOR PBY-2 & -3 SPARES

C-70496

DASH NO.	MODEL	NEXT ASSY	REQ
-2	28-5AMN	28B4142	1
-2	PBY-5B	28B4142	1
-2	PBY-5A	28B4142	1
-2	PBY-5	28B4142	1
-10/-11	PBY-6	28B6000	1
-10/-11	PBY-6B	28B6000	1
-10/-11	28-5AME	28B5500	1
-10/-11	28-MA	28B5500	1
-10/-11	28-AMC	28B5500	1
-10	28-MN	28B1000	1
-10	28-ME	28B1000	1
-10	28-MC	28B1000	1
-10	28-MA	28B1000	1
-10/-11	PBY-5A	28B5500	1
-10/-11	PBY-5	28B1000	1
-11	PBY-4	28B1000	
-10	PBY-4	28B1000	
-1	PBY-3	28B1000	
-0	PBY-3	28B1000	
-1	PBY-2	28B1000	
-0	PBY-2	28B1000	
-0	PBY-1	28B1000	

SERVICE PARTS FOR AIRPLANE

AN960-D10	8	8	8	8	8
AN960-D3		9	9	9	9
AN935-10		2	2	2	2
AN520-D10-7		2	2	2	2
AN515-D4-5		9	9	9	9
AN442-D4	3	1	1	1	1
AN393-27	2	2	2	2	2
AN393-9	2	2	2	2	2
AN380-C2-2	4	4	4	4	4
AN340-D4		9	9	9	9
AN315D-3R		2	2	2	2
Q616-D4-4	1	1	1	1	1
Q4305D4					
Q608D4-16	1	1	1	1	1
28B1849	1	1	1	1	1
28B1848	1	1	1	1	1
28B1897	1	1	1	1	1
28B1191-5	1	1	1	1	1
28B1191-4	1	1	1	1	1
28B1191-3	1	1	1	1	1
28B1191-2	1	1	1	1	1
28B1189	1	1	1	1	1
28B1188-1	1	1	1	1	1
28B1188	1	1	1	1	1
28B1187-6				1	1
28B1187	1		1	1	
28B1186-7				2	2
28B1186-2	1	1	1	1	1

ST'D PARTS	PART NO.	REQ.
MAT.	PARTS LIST PER ASSY	-0 -0 -1 -10 -11

REPLACES	
REPLACED BY	
LIMIT ON DIMENSIONS UNLESS OTHERWISE SPECIFIED	±1/64
SCALE	12" = 1'0"

[redacted]

MATERIAL	SPEC.	HEAT TREAT	FINISH
NOTED	NOTED	NOTED	NOTED

LOC. ...
5-5-36 ...
DRAFT | CHECK | STAR | ENG.
OPP. HAND

CONSOLIDATED AIRCRAFT CORP. BUFFALO, N.Y.

NAME: VENTILATOR-HULL-INSTALLATION

G 28B118…

SUPPLIES & EQUIPMENT CLASSIFICATION			
LET	ALTERATION	DATE	BY
F	TRACED	8-30-43	[illegible]
G	-4, 8-5 PAST WAS A490	8-14-43	[illegible]
H	ADDED TO REQ./PLANE BLK: -3 (N.A. 2885003) FOR PBY-5 C. 91876 [illegible] 90 DEGREE ; PBY-5A C. 13595. NO WT. CHG.	10-22-43	WESTON
J	ADDED DETAIL - 3. NO WT. CHG.	7-27-43	WEST

E.O. A64184

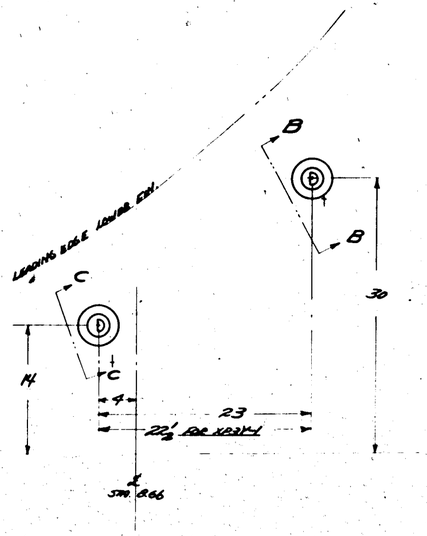

8 SIZE INSTALLATION SKETCH

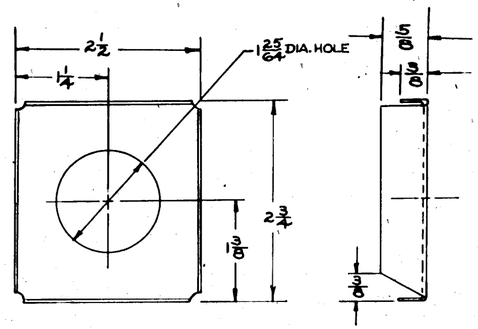

DETAIL - 3
SCALE .12" = 1'0"

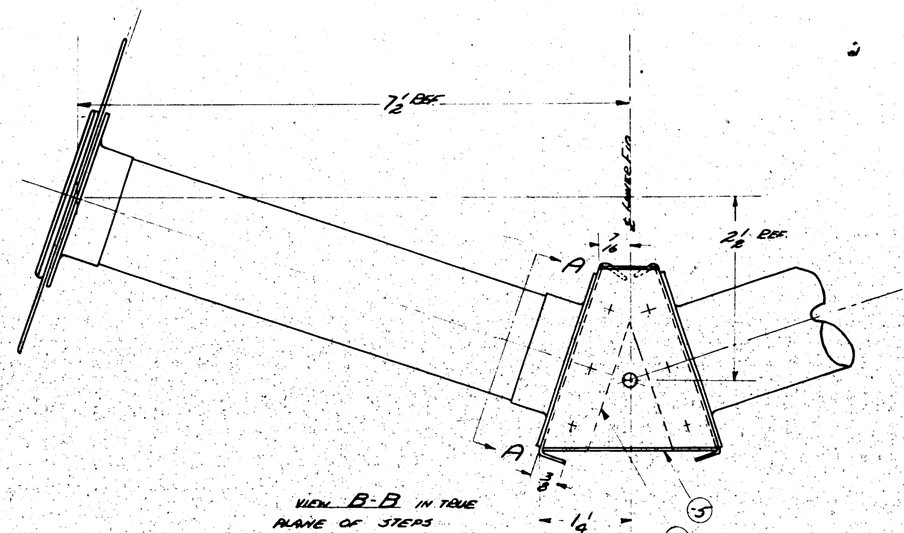

VIEW B-B IN TRUE PLANE OF STEPS
DETAILS OF INSTALLATION OF UPPER STEP ARE THE SAME AS THE LOWER STEP EXCEPT MIDDLE ATTACHMENT AS SHOWN ABOVE.

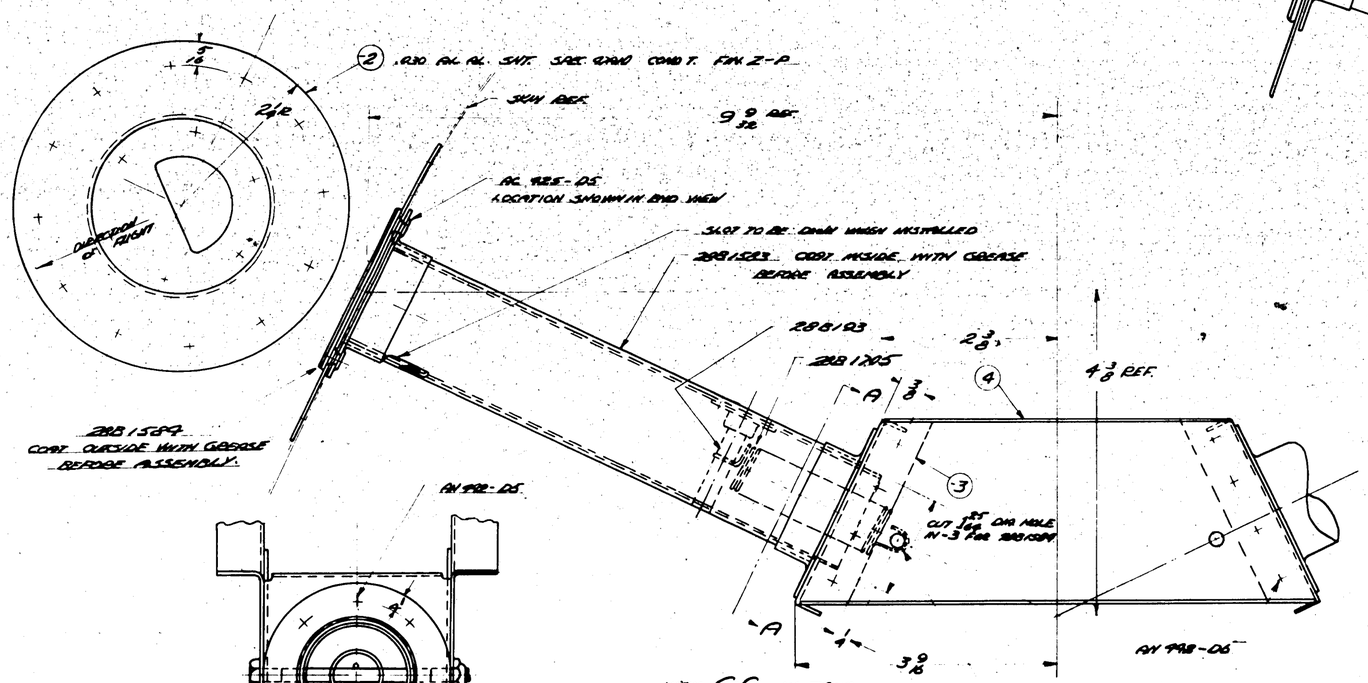

Note: 1. STEPS ARE TO BE SET IN NORMAL TO THE PLATING SURFACES & FINGER CATCH SET IN DIRECTION OF FLIGHT BEFORE RIVETING IN PLACE OR MAKING MIDDLE ATTACHMENT. C.14004 C.91876 [illegible] 91-345

2. -3 & -6 $2\frac{1}{2} \times \frac{5}{8} \times .040$ CHANNEL MADE FROM .040 SHT. SPEC. 47A10 COND A. THESE PIECES SHOULD BE CUT TO SIZE ON ASSEMBLY OF FIRST SHIP. SHT. SPEC 3 (COND T) AFTER FORMING. FINISH: Z-PARKY ON PBY-1 (XP31-1 & Z-P-AL ON PBY-2 & FUTURE

3. DIMENSIONS FOR LENGTH OF 4A-5 CHANNELS ARE APPROXIMATE. CUT THESE PIECES 4 INCH LONG TO BE TRIMMED TO SIZE WHEN STEP IS INSTALLED IN THE FIN.

4. -4 & -5 $2\frac{1}{2} \times \frac{5}{8} \times .040$ CHANNEL MADE FROM .040 SHEET SPEC. 47A10 COND T. THESE PIECES CUT TO SIZE ON ASSEMBLY OF FIRST SHIP. FINISH: Z-P-2GP ON XP31-1 (PBY-1; Z-P-2GP ON PBY-2 & FUTURE

⑥ S: 70056 A: 13595 C: 68576 ONLY

GP-GREEN PRIME

FINISH CODE	
Z	[illegible]
P	[illegible]
AP	[illegible]
C	CHROMATED PLATE

-3	PBY-5A	2885083	2					
-3	PBY-5	2885083	2					
	PBY-5	2881006	1					
	28-5MA	2881006	1					
	28-5MC	2881006	1	AC 925-05	32	32	32	32
	28-5ME	2881006	1					
	28-5MH	2881006	1	AN 492-06	28	28	28	28
	28-5AMC	2881006	1	AN 492-05	80	80	80	80
	28-5AMN	2881006	1	AN 380-2-2	3	3	3	3
				AN 310-3	3	3	3	3
				AN 3-30	3	3	3	3
				2881205	4	4	4	4
				2881504	2	2	2	2
				2881503	2	2	2	2
				2881503	4	4	4	4
				2881503	4	4	4	4
	PBY-5A	2881006	1					
	PBY-5B	2881006	1					
	PBY-4	2881006			-6	2	2	2
	PBY-3	2881006			-5	2	2	2
	PBY-2	2881006			-4	2	2	2
	PBY-1	2881006			-3	2	2	2
	XPBY-1	2881006		2881197-2		4	4	4

O.H.	MODEL	NEXT ASSY	REQ.	PARTS	AS MANY AS REQUIRED AS APPLICABLE

REQUIREMENTS PER AIRPLANE				MAT.	PARTS LIST PER ABS:
NAVY	NOTED	NOTED	NOTED	NOTED	
	MATERIAL	SPEC.	HEAT TREAT	FINISH	

	DRAFT	CHK'R	EXAM.	ENG.
	[illegible]	[illegible]	[illegible]	[illegible]

REPLACES 2881197
REPLACED BY
LIMIT ON DIMENSIONS UNLESS OTHERWISE SPECIFIED ± .015
APPROVED [illegible] 8-30-43 DATE
CALC WT. 2.60 ACT WT.
SCALE 12" = 1'-0"

CONSOLIDATED AIRCRAFT CORP. BUFFALO, N.Y.
STAMP PT. No. WHERE SHOWN

NAME STEP - INSTALLATION HULL - LOWER FIN
GP HAND
SIZE C
2881197

Consolidated Vultee Aircraft Corporation Buffalo
Property of Trading Cards

(-9) 1 1/4 SNAP WESTERN METAL SUPPLY CO #25 OR EQUIV
BEND AS SHOWN - LOOP EYE - CATALOG PAGE 357

(-10) 1/4 x 3/16 x 1 1/4 AL ALLOY BLOCK. DRILL #10(.193) C'SINK 3/8 x 82°
SPEC 6A9 COND T (ALCOA 2A57)

AN 320-10-12 (T)
AC 940-3.6
AN 345-10
PEEN END OR LOCK PUNCH

INSULATE DISSIMILAR METALS WITH MARINE GLUE & FABRIC

SECTION AA
SCALE 12"-1'-0"

BEND FLANGE OF ANGLE TO CLEAR HANDLE
9F039 HANDLE
NOTCH END AS SHOWN

CUT NOTCH AS SHOWN IN -10

STENCIL ON OUTSIDE OF COVER
MODEL PBY-*
2 INCH BLACK LETTERS
*(PBY-1, PBY-2 OR PBY-3 AS THE CASE MIGHT BE)

SECTION CC

28B307-1

28B307 REF

BUTT JOIN ANGLE

AN320-10-8
AN315-10
AC440-316

Q4305-D4

7 EQUAL SPACES

5 EQUAL SPACES

42°

21°

JOGGLE

Q4305-D4 RIVETS IN SKIN

CLAMP

TRIM ANGLES AS SHOWN

(AC) 11 7/8 REF)
(AE)
28B307 REF

(AA)
(Z)
3 1/8 R

(AD)
28B307-1 REF

16 5/16 R

(-18) 051 ALC GHT. SPEC 47A8 T

(AH)
(-19) CVAC. RUG6.50 1/2 x 1/2 x 92
RUBBER HYCAR SPONGE
FABRIC COVERED.
KIRKHILL RUB. CO.
LOS ANGELES, CALIF.
OR EQUIVALENT.

RIVET SPACING 1/2 - 1/4

10° APPROX.

SECTION B-B
SCALE 12"-1'-0"

28B307 REF

RIVET Q4305-D4

INSULATE DISSIMILAR METALS WITH MARINE GLUE & FABRIC

28B307 CLAMP

DETAIL OF CLAMP ASSEMBLY
SCALE 12"-1'-0"

(AC) AG
(20) Y-2-A19T x 12 OR K9876 x 12, AL ALLOY EXTR, SPEC QQ A 354-T. (AJ) (R)
SYMMETRICAL ABOUT ℄

(-5) (AG) (AJ) (U) (R) Y-6-A26T x 21 7/8, OR K1288 x 21 1/8, AL ALLOY EXTR, SPEC QQ-A-354-T.

(-6) (AG) (AJ) (R) Y-6-A26T x 21 7/8, OR K1288 x 21 1/8, AL ALLOY EXTR, SPEC QQ-A-354-T.

(-7) (AG) (F) Y-2-A19T x 16, OR K9876 x 16, AL ALLOY EXTR, SPEC QQ-A-354-T. RH OPPOSITE

(-8) (AJ) (Q)

NOTE
⊕ INDICATES RIVETS

NOTE: THIS COVER MUST FIT THE REVOLVING CIRCULAR WINDSHIELD 28B1307

MCR 248

FINISH:-
Z-P.2GP ON PBY-1 & XP324
Z-P.2GP ON PBY-2 & FUTURE

-19	28-5ME	28B5505	1		AN442DM4	A
-18	28-5ME	28B5505	1		AN320-10	A
-19	PBY-5B	28B5505	1		AN320-10	B
-18	PBY-5B	28B5505	1		AC940-316	B
-0	28-MC	28B1307	1		AN345-10	B
-0	28-5MA	28B1307	1		AN520104	A
-0	28-2AMN	28B1307	1			
-0	28-2AMC	28B1307	1		Q4305-D4	
-0	PBY-5A	28B1307	1			
			1		9F039	L
-10	28-5ME	28B5505	2			
-9			2		28B307	6
-6			1		28B307-1	L
-5	28-5MN	28B5505	1		-10	L
					-9	L
-0	28-5MN	28B1307	1		-8	L
-0	PBY-5	28B1307	1		-7	L
-0	PBY-4	28B1307	1		-6	L
-0	PBY-3	28B1307	1		-5	L
-0	PBY-2	28B1307	1		-20	L
-0	PBY-1	28B1307	1		-19	L
-0	XP324	28B1307	1		28B1315-18	L

#1-150

FC-70496
C-77713
C-88476

FINISH CODE	
GP	GREEN PRIME
Z	ANODIC TREATMENT
P	P.2T PRIMER
AP	ALUMINIZED PRIMER
C	CADMIUM PLATE

REPLACES		APPROVED	5-18-37
REPLACED BY		DRAWN	
LIMIT ON DIMENSIONS UNLESS OTHERWISE SPECIFIED	± 1/32	CALC'D	
		SCALE 6"=1'-0"	
AC			
NAVY NOTED		NOTED	NOTED
MATERIAL			

ALL AL ALLOY SHEET SPEC 47A10 (COND A) ALLOY 24 A EXCEPT AS NOTED
ALL AL ALLOY EXTRUSIONS SPEC 46A8 (COND A) ALLOY 24 A EXCEPT AS NOTED
HEAT TREAT ALL CONDITIONS AS MATERIAL PER SPEC 3853 (COND T)
RIVETS AL ALLOY EXCEPT AS NOTED

CONSOLIDATED AIRCRAFT CORP. BUFFALO N.Y.

STAMP PT. NO. ANTI-CORROSION

NOTED

					PART NO.	-0

PARTS LIST PER ASSY.

NAME: COVER ASSEMBLY REVOLVING CIR. WINDSHIELD

DEPT. HAND

SIZE G | DWG NO. 28B1315 | REV R

28B1315

E.O. 10151 { P TRACED TO DATE 5-15-37 DRC; Q REMOVED SPOTWELDING NOTE 5-21-37 DRC; R WAS .533T MATERIAL " "; S REDRAWED RIVETS ON STRAIGHT LENGTH ADDED " "; SPECING NOTE REMOVED 7-11-39 K; T CHANGES (CORN FITTINGS) NOTE 7A-9 FROM AN 530-10-9 TO AN 530-10-11 11-2-40 DRC; U CHG. MAT. OF -5 FROM 1/64 x 3/16 AL ALLOY ANGLE, 21 7/8 LONG, ALCOA DIE K6401, CONDT TO 1 1/4 x 3/16 x 100 AL ALLOY ANGLE 21 3/8 LONG ALCOA DIE K1288 COND T NEG. WT. CHG. 4-6-42 CARLSON; V LIMIT ON ANGLE 2" 1/32 WAS 2" 1/64 NO WT. CHG. 4-16-42 CARLSON; W ADDED -17 (WT. CHG. NEG.) 5-31-42 BENTZ; X CHG'D -9 MAT'L FROM 3 PLY RUBBER FABRIC COVERED "TO "HYCAR SPONGE - FABRIC COVERED" WT CHG NEG 6-26-42 CLARK; V Q4305-D4 WAS AC 425-D4 IN SECT C-C CLAMP ASSY. NEG. WT. CHG. 6-30-42 BOWERS; Z REM'D -2, -3, -8, -18, -17 DIM 1/4 & 1/4 ADDED -18 -17 DIM 1/8 1/2, & 1/8 3 1/8 & 1/2, DIM 16 1/16 WAS 16 5/16, 3 1/8 WAS 3 1/8, DIM WAS 3 3/32 NEG. WT. CHG. 8-6-42 CLARK; AA CHANGED 3 1/8 DIM FROM OUTSIDE LINE TO INSIDE LINE, 12" WAS 12 1/8, NO WT. CHG. 9-23-42 SMITH; AB PER SEC "B-B" -19 LENGTH 92 WAS 82 -19 (REQ) WAS (9), -18 (1) WAS (6), NEG. WT. CHG. 12/7/42 FINGER; AC -20 WAS -13, DIM 3 7/8 WAS 4 1/8 & 12 3/8 WAS 12 1/8, NEG. WT. CHG. 12/7/42 FINGER; AD 3 1/32 DIM WAS 2 31/32, REMOVED -11 & -12 LOCATING DIMS. NO WT. CHG. 1-13-43 ROSS; AE 11 7/8 DIM. WAS 12 3/8, WT. CHG. NEG. 1-13-43 ROSS; AF -19 MATL. CALLOUT "MAKE FROM 22F299-9" WAS 1/16 x 1/8 HYCAR SPONGE, FABRIC COVERED, 92 LONG" NO WT. CHG 3-16-43 HOOVER; AG ON FACE OF DWG. FOR -3 & -6, REPLACED "12 3/8 x .070 ALUM. ALLOY ANGLE, 24ST, SPEC 46A9, 21 7/8 LONG ALCOA DIE K1288 COND T (2 PLACES) WITH" Y-6-A26T x 21 7/8". FOR -7 & -8, REPLACED "3 3/8 x 1/8 x 16 AL. ALLOY ANGLE, 24ST, SPEC 46A9, 16 LONG, ALCOA DIE K9876 COND T" WITH "Y-2-A19T x 16". & FOR -20, REPLACED "3 3/8 x 1/8 x 12 AL ALLOY ANGLE, ALCOA DIE # K9876, 24ST, 46A9, COND T" WITH "Y-2-A19T x 12". WT. CHG. NEG. 4-6-43 ROSS; AH SEC. B-B, NOTE -19, CVAC. RU 64-50 - - - - - OR EQUIVALENT" WAS -19 MAKE FROM 22F299-9" NO MISC CHG 8-23-43 SMITH; AJ ON FACE, AT CALLOUTS FOR -3 & -6 ADDED "OR K 1288 x 21 7/8 AL ALLOY EXTR, SPEC QQ A-354-T." AT CALLOUT FOR -7 & -8 ADDED "OR K9876 x 16 AL ALLOY EXTR, SPEC QQ A 354-T." AT CALLOUT FOR -20 ADDED "OR K 9876 x 12, AL ALLOY EXTR, SPEC QQ-A-354-T." NO WT. CHG 10/14/43 HOOVER

SUPPLIES & EQUIPMENT CLASSIFICATION		[redacted]	
LET	ALTERATION	DATE	BY
B	TRACED	6-1-37	H.W.
C	REMOVED 1/32 CUTOUT & ELIMINATED 45° CUT-Sec A-A	7-11-40	[illegible]

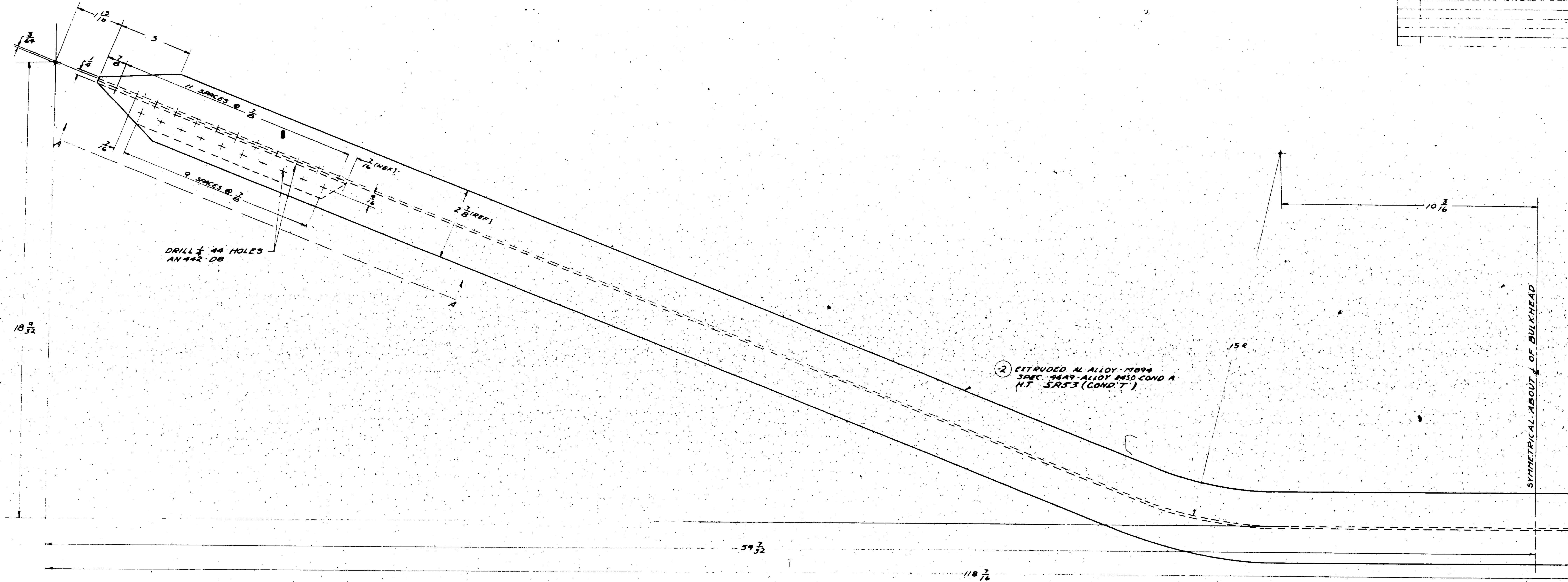

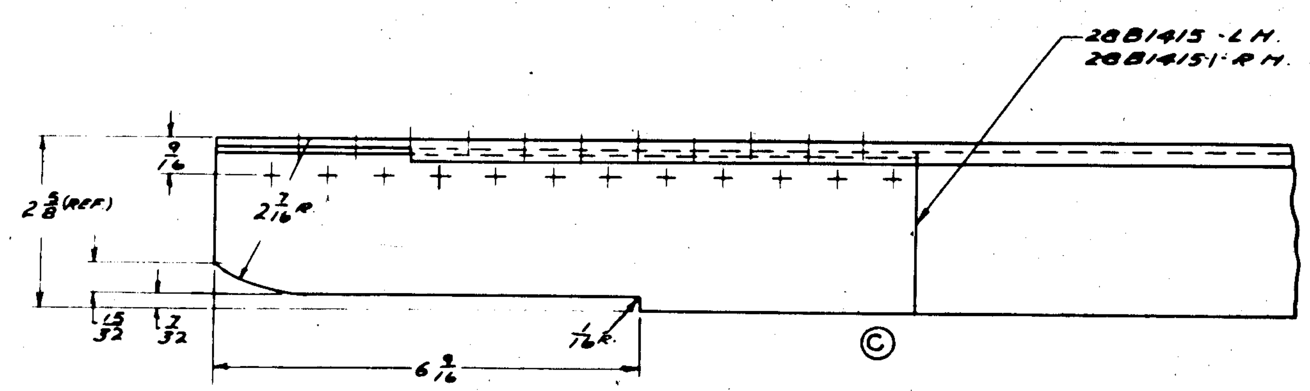

VIEW AT A-A

O.H.	MODEL	NEXT ASSY.	REQ.	PARTS			
	PBY-5A	28B5580	2				
	PBY-5B	28B1406	2				
	PBY-4	28B1400					
	PBY-3	28B1400		28B1415-1	1	1	1
	PBY-2	28B1400		28B1415	1	1	1
	PBY-1	28B1400		28B1402-2	1	1	1
REQUIREMENTS PER AIRPLANE				MAT.	PBY-1	PBY-2	PBY-3

PARTS LIST PER ASSY.

REPLACES

REPLACED BY

LIMIT ON DIMENSIONS UNLESS OTHERWISE SPECIFIED ± 1/32

[redacted]

APPROVED P.A.U. DATE 4-29-37

CALC. WT. 8.03 ACT. WT.

SCALE 6" = 1'-0"

AC

NAVY NOTED (MATERIAL) | NOTED (SPEC.) | NOTED (HEAT TREAT) | NONE (FINISH)

DRAFT	CHECK	EXAM.	ENG.
8.04 9-20-35	S.M.S.	MILLER	

CONSOLIDATED AIRCRAFT CORP.
BUFFALO, N.Y.

STAMP PT. No. WHERE SHOWN

NAME: COLUMN-HULL-BULKHEAD #4

OPP. HAND

DWG. SIZE G 28B1402

SULLIVAN-MCKEEGAN & INC. BUFFALO
IMPERIAL TRACING CLOTH

SUPPLIES & EQUIPMENT CLASSIFICATION			
LET	ALTERATION	DATE	BY
C	TRACED	4-30-37	V-I-B
D	CORNER CUT-OFF ADDED	3-11-41	[illegible]
E	7/8 WAS 1 29 R. WAS 28 7/8 R. CHANGE 8 DIMENSIONS ADDED	4-9-41	S.R.S.

E.O. 38057
E.O. 38051
PBY-5

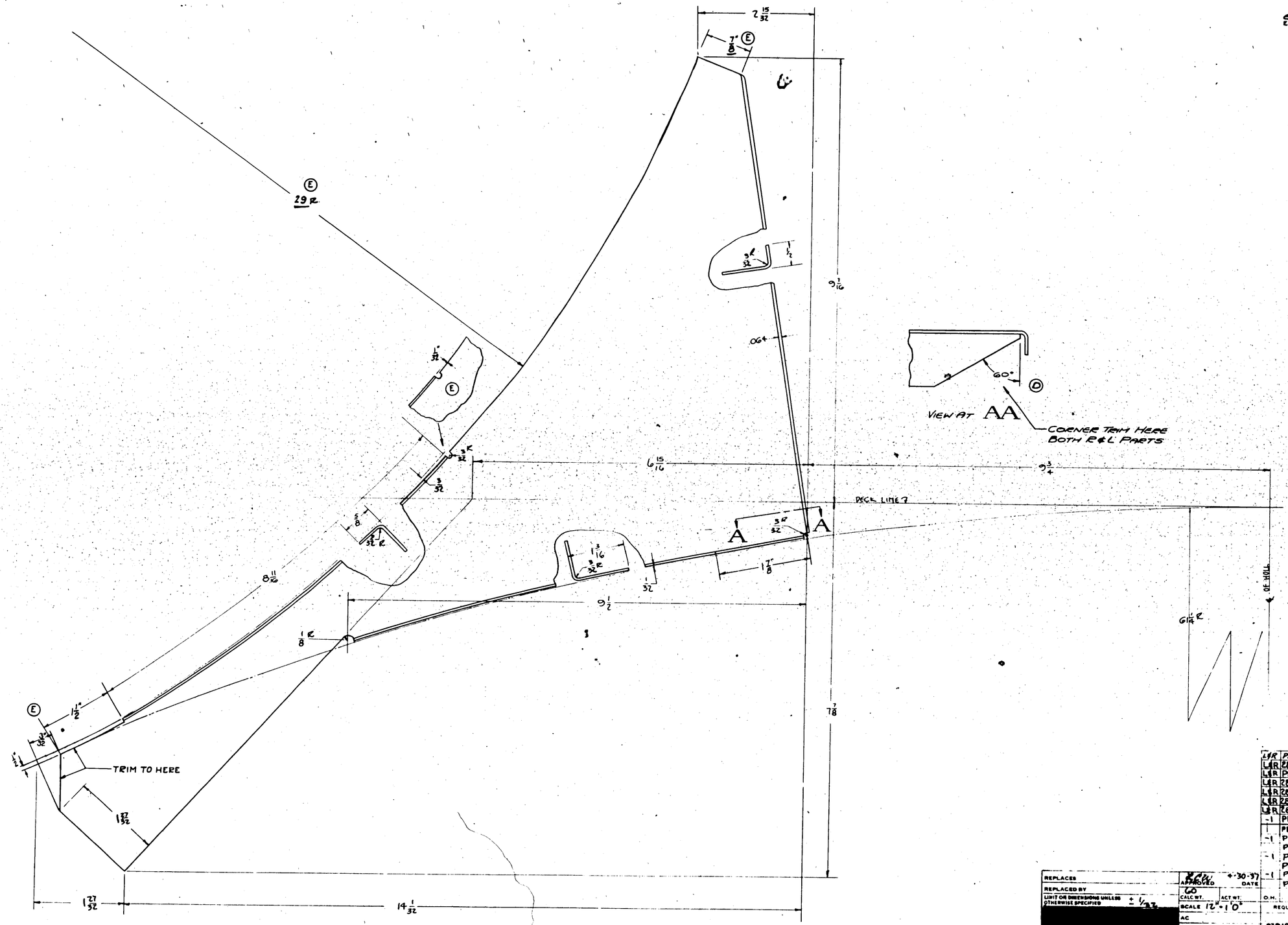

L&R	PBY-5B	28B1400	VEA
L&R	28-5AMC	28B3500	
L&R	PBY-5A	28B3500	VEA
L&R	28-5MC	28B1400	
L&R	28-5MN	28B1400	
L&R	28-5MA	28B1400	
L&R	28-5ME	28B1400	
-1	PBY-5	28B1400	
	PBY-5	28B1400	
-1	PBY-3½	28B1400	
	PBY-3½	28B1400	
-1	PBY-2	28B1400	
	PBY-2	28B1400	
-1	PBY-1	28B1400	
	PBY-1	28B1400	

REPLACES
REPLACED BY
LIMIT OR DIMENSIONS UNLESS OTHERWISE SPECIFIED ± 1/32
SCALE 12" = 1'0"
AC
NAVY AN ALLOY SHEET 24 S.O.
MATERIAL
CONSOLIDATED AIRCRAFT CORP. BUFFALO, N.Y.
STAMP PT. No. WHERE SHOWN

APPROVED [illegible] 4-30-37 DATE
CO
CALC WT. ACT WT.

O.H.	MODEL	NEXT ASSY.	REQ.	ST'D PARTS	L.H. REQ.	R.H. REQ.	PART NO.	L.H. REQ.	R.H. REQ.
REQUIREMENTS PER AIRPLANE				MAT.	PARTS LIST PER ASSY.				

91A10 COMP A SPEC | SR63 COND T HEAT TREAT | NONE FINISH

B.O.I. [illegible] 9-20-37 5-6-37
DRAFT | CHECK | ENGR. | ENG.

NAME
GUSSET - HULL BULKHEAD # 4 REAR

OPP. HAND 28B1404-1
DWG. SIZE G
28B1404

Sullivan-McGregor Co. Inc. Buffalo
Nominal Tolerance Charts

SUPPLIES & EQUIPMENT CLASSIFICATION			
LET	ALTERATION	DATE	BY
B	TRACED	4-28-37	V.I.B
C	ADDED CUTOUT & 7/16 DIM. NEG WT. CO	6-3-42	[illegible]

E.O. A40245

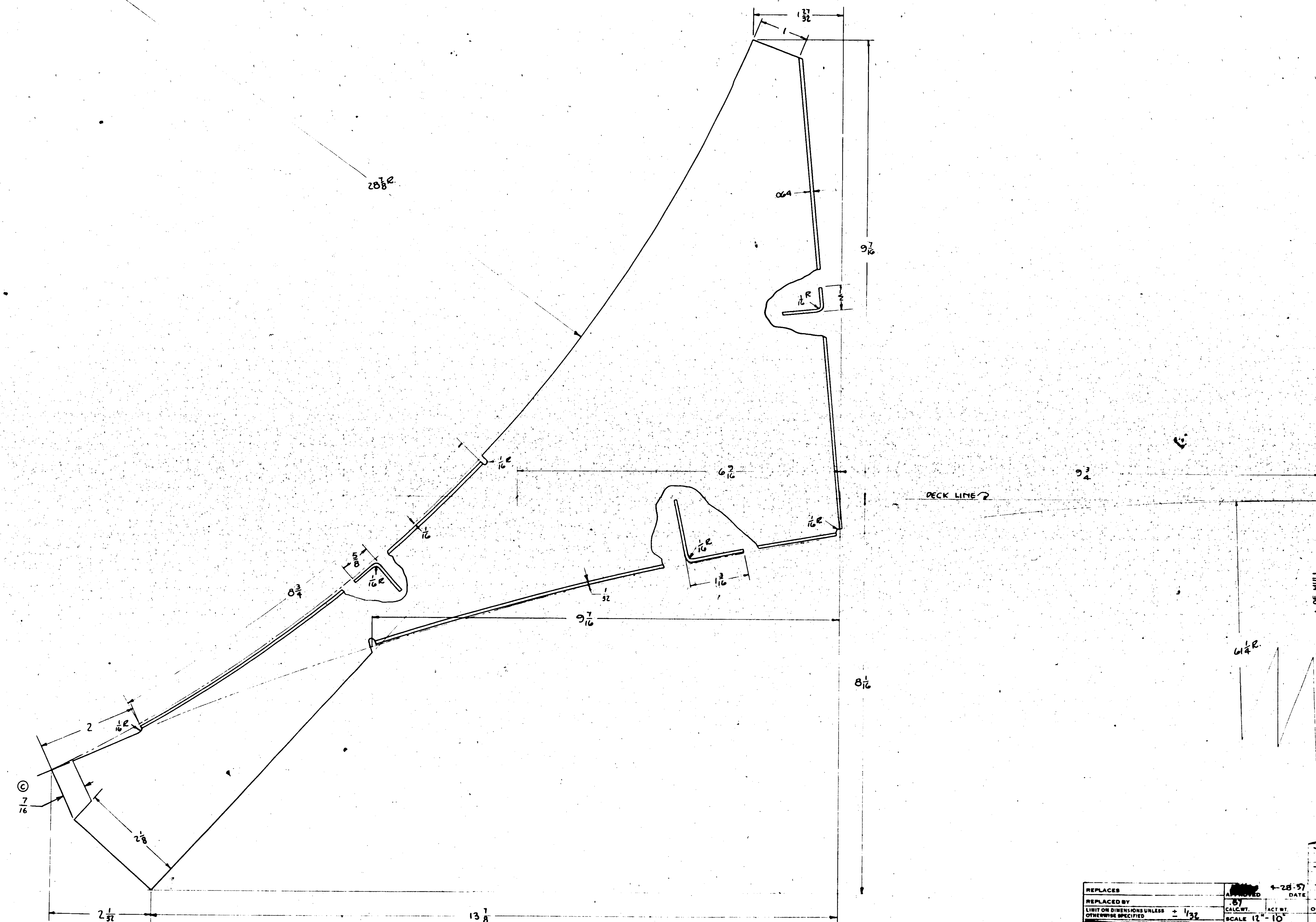

	MODEL	NEXT ASSY	REQ.
-R	PBY-5A	28B5580	1
-L	PBY-5A		1
-R	28-5AMC		1
-L	28-5AMC		1
-R	28-5AMN		1
-L	28-5AMN	28B5580	1
-R	PBY-5	28B1400	1
-L	PBY-5		1
-R	28-5MA		1
-L	28-5MA		1
-R	28-5MC		1
-L	28-5MC		1
-R	28-5ME		1
-L	28-5ME		1
-R	28-5MN		1
-L	28-5MN		1
-R	PBY-5B	28B1400	1
-L	PBY-5B	28B1400	1
-1	PBY-3 & 4	28B1400	
	PBY-3 & 4	28B1400	
-1	PBY-2	28B1400	
	PBY-2	28B1400	
-1	PBY-1	28B1400	
	PBY-1	28B1400	
O.H.	MODEL	NEXT ASSY	REQ.

REQUIREMENTS PER AIRPLANE

REPLACES

REPLACED BY

LIMIT ON DIMENSIONS UNLESS OTHERWISE SPECIFIED ± 1/32

[redacted]

APPROVED [redacted] DATE 4-28-37

.87 CALC.WT. ACT WT.

SCALE 12" - 10"

AC

NAVY AL. ALLOY SHEET 2450 — MATERIAL

47A10 COND. A — SPEC.

SR53 COND T — HEAT TREAT

NONE — FINISH

MAT

PARTS LIST PER ASSY.

B.O.I [signature] MILLER

20-35 5-27-37

DRAFT CHECK EXAM. ENG.

CONSOLIDATED AIRCRAFT CORP. BUFFALO, N. Y.

STAMP PT. No. WHERE SHOWN

NAME GUSSET-HULL-BULKHD. #4 FRONT

OPP. HAND 28B1405-1

DWG. SIZE G 28B1405

SULLIVAN-MCKEEGAN CO. INC. BUFFALO
IMPERIAL TRACING CLOTH

SUPPLIES & EQUIPMENT CLASSIFICATION			
LET	ALTERATION	DATE	BY
H	TRACED UP TO DATE	5-8-37	BMC
J	28B1425-47 WAS 28B1450-47		
K	UPPER SECTION FOR PBY-3 & 4 ADDED	1-20-38	MMD
	15-16-17-18-19-81 FOR PBY-3 & 4 ADDED		"
L	ADDED 28BM425-75 & -76 FILLERS	1-20-38	MMD
M	ADDED -80 FOR PBY-3 & PBY-4 ASSEMBLY	1-20-38	"
N	ADDED -550 ASSY. & PBY-5 REQ.	1-19-38	[illegible]
	28B075 FOR ASSY 28B075		
	28B1425-77; 78-79 REPLACE		
	28B1450-14, -25 & -26		
	M931 WAS M925 - ADDED SHEET DIM.		
O	ADDED -81, REPACING EA# 13643	6-28-38	MMD
	28BM425-77. EO# 16713		
P	REMOVED PARTS 28B1891, 28B1891-2,	1-15-40	[illegible]
	0578-H3-2.25, AN 365-D6, AN 960-D6 &		
	FROM B/M & DETAIL		

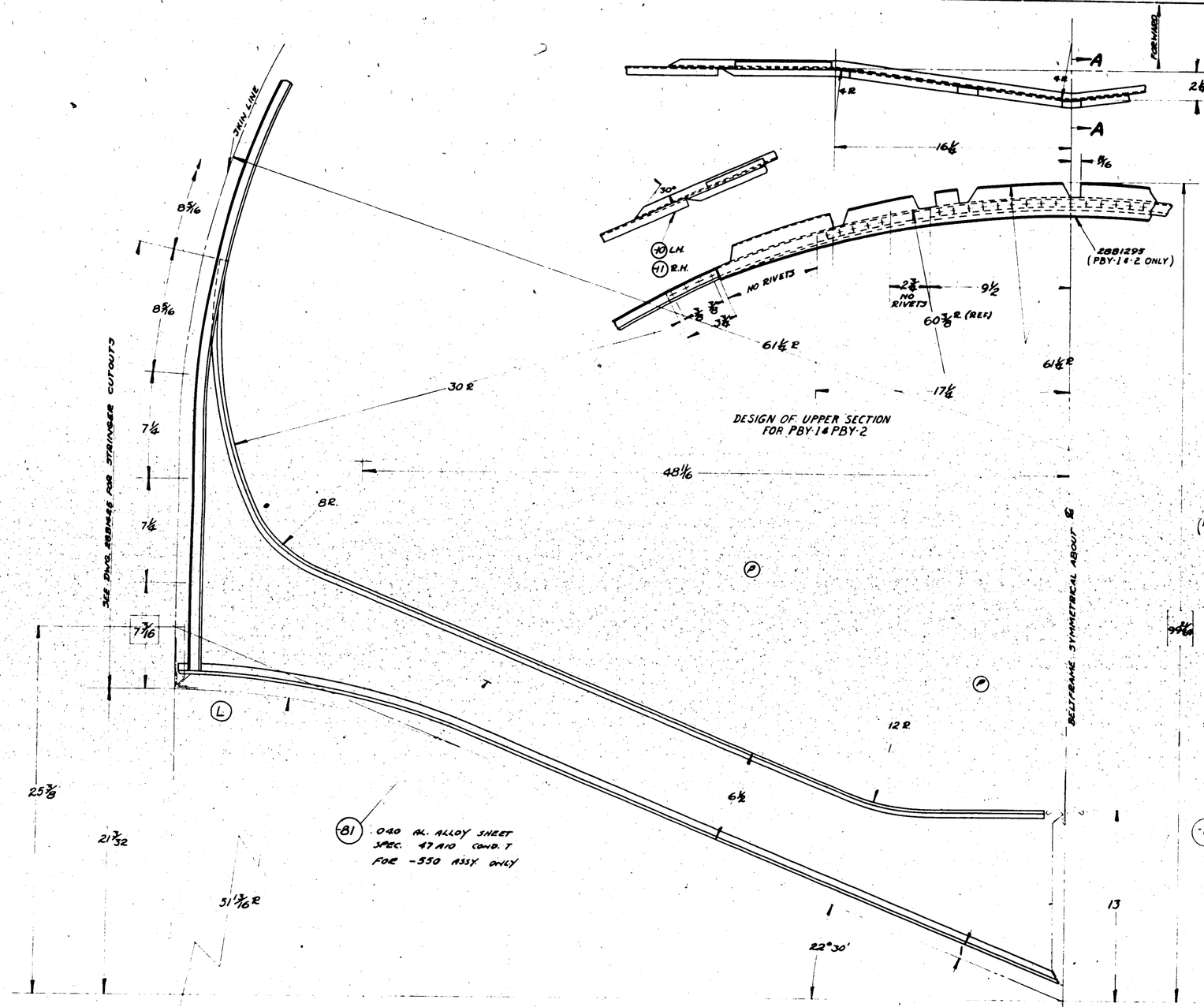

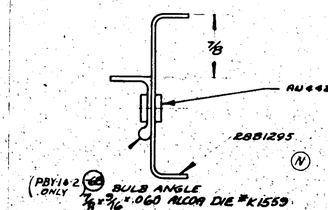

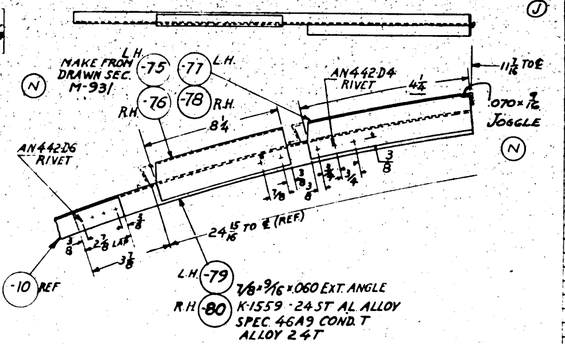

FINISH CODE	
Z	ANO.D.C TREATMENT
P	P.27 PRIMER
AP	ALUMINIZED PRIMER
C	CADMIUM PLATE

FINISH: AP
2-P-27 ON PBY-1
2-P-27 ON PBY-2 & FUTURE
GP

PARTS NO	PBY-1 L	PBY-1 R	PBY-2 L	PBY-2 R	-90 -550 L	-90 -550 R
28BM468	2	2	2	2		
28B1477	2	2	2	2		
28B1478-9	1	1	1	1		
28B1478-5	1	1	1	1		
28B073	22	22	44			
0578H5-15	2					
AN442-D5						
AN442-D6						
28BM2575	2	2	2	2		
28BM26-76	2	2	2	2		
28B1450-77			1	1		
-78			1	1		
-79			1	1		
-80			1	1		
-75			1	1		
28B1450-76			1	1		
28B1425-79				2		
28BM13-78				2		
28B1450-81				2		
28B075				22		
AN442-D4						

	PBY-5B	28B5450
-550	PBY-5	28B1000
-90	PBY-4	28B1000
-90	PBY-3	28B1000
	PBY-2	28B1000
	PBY-1	28B1000

	28B1460	2	2	2	2
	28B1895	1	1		
	28BM450-74	1	1	1	1
	73	1	1	1	1
	72	1	1	1	1
	71	1	1	1	1
	70	1	1	1	1
	69	1	1	1	1
	68	1	1		
	67	2	2	2	2
	66	2	2	2	2
	65	1	1	1	1
	64	1	1	1	1
	63	1	1	1	1
	62	1	1	1	1
	61	1	1	1	1
	60	1	1	1	1
	59	1	1	1	1
	58	1	1	1	1
	57	1	1	1	1
	56	1	1	1	1
	55	1	1	1	1
	54	1	1	1	1
	53	1	1	1	1
	52	1	1	1	1
	51	1	1	1	1
	50	1	1	1	1
	99	2	2	2	2
28B1450-98		2	2	2	2
28B1425-97		2	2	2	2
28B1450-96		1	1	1	1
	95	1	1	1	1
	94	1	1	1	1
	93	1	1	1	1
	92	2	2	2	2
	91	2	2	2	2
	90	2	2	2	2
	39	2	2	2	2
	38	2	2	2	2
	37	2	2	2	2
	36	2	2	2	2
	35	2	2	2	2
	34	2	2	2	2
	33	2	2	2	2
	32	8	8	8	8
	31	8	8	8	8
	30	2	2	2	2
	29	2	2	2	2
	28	2	2	2	2
	27	2	2	2	2
	26	2	2	2	
	25	2	2	2	
	24	2	2	2	2
	23	2	2	2	2
	22	1	1	1	1
	21	1	1	1	1
	20	1	1	1	1
	19	1	1	1	1
	18	1	1	1	1
	17	1	1	1	1
	16	1	1	1	1
	15	1	1	1	1
	14	2	2	2	
	13	2	2	2	2
	12	2	2	2	2
	11	1	1	1	1
	10	1	1	1	1
	9	1	1	1	1
	8	1	1	1	1
	7	1	1	1	1
	6	1	1	1	1
	5	1	1	1	1
	4	1	1	1	1
	3	1	1	1	1
28BM450-2		1	1	1	1

PARTS NO REVISED -90 -550

NOTE: ON PBY-2 & PBY-3 INSTALL DIAGONAL BRACES 28B1450-56 & -57 ON FRONT SIDE OF BELTFRAME (PORT & STBD SIDES) INSTEAD OF AFT SIDE AS SHOWN ON 28B1425

VIEW SHOWN - PORT SIDE LOOKING FORWARD

EXCEPT AS NOTED ON THIS DRAWING BY [ ] DIMENSIONS, THE CONSTRUCTION OF TWO BELTFRAME IS STRUCTURALLY SIMILAR IN EVERY DETAIL TO BELTFRAME 6.85 (NOT INCLUDING CLIPS OR PARTS OF, OR FOR ATTACHING FURNISHINGS REFER TO DWG 28B1385 FOR INFORMATION NOT GIVEN HERE. PARTS FOR THIS DWG. NUMBERED SIMILAR TO DWG. 28BM85.

FOR TABLE OF BULKHEAD ANGLES SEE 28B036

ALL AL. ALLOY SHEET 24ST 3 SPEC. 47A10 (CONDITION T) ALLOY 24 T EXCEPT AS NOTED
ALL AL. ALLOY EXTRUSIONS 3 SPEC. 46A9 (CONDITION T) ALLOY 24ST EXCEPT AS NOTED
HEAT TREAT ALL CONDITION A MATERIAL PER 3 SPEC 3453 COND T
RIVETS AL. ALLOY EXCEPT AS NOTED.

REPLACES 28B450 on 1-5-38
REPLACED BY
LIMIT ON DIMENSIONS UNLESS OTHERWISE SPECIFIED ±

APPROVED [redacted] DATE 4-22-37
CALC WT 18.50 ± T WT
SCALE 3/4 = 1'-0"

O.H.	MODEL	NEXT ASSY	REQ.

REQUIREMENTS PER AIRPLANE

AC			
NAVY	NOTED	NOTED	NOTED
MATERIAL	SPEC.	HEAT TREAT	FINISH

MAT. PARTS LIST PER ASSY.

L.O.C. [illegible] MILLER
3/16/38 G.E.S.
DRAFT CHECK EXAM. ENG.

CONSOLIDATED AIRCRAFT CORP. BUFFALO, N.Y.
STAMP PT. No. WHERE SHOWN

NAME BELTFRAME - HULL STA 450

OPP. HAND

SIZE G | 28B1450

SUPPLIES & EQUIPMENT CLASSIFICATION			
LET	ALTERATION	DATE	BY
D	TRACED UP TO DATE	9-29-37	HW
E	CHANGED 288M426-47 TO.	1-26-38	[redacted]
	288M426-47 IN B/M		
F	ADDED -550 ASS'Y & PRFS REQ.	11-17-38	[redacted]
	ADDED -75 & -76 ANGLES		
	288073 REPLACED BY 288075		
	288M425-77, -78 & -79 CANCELED		
	288M475-14, -25 & -26		
G	REMOVED 288M425-77. REQ-	4-29-38	MFD
	PLACED BY -77. ADDED -61.	"	"
H	288B5014 L & 288B5014 R WAS 288075	11-11-38	Dwg

E.O.# 13644
E.O. 18718

288M474-7	1	1	1	1	
288M474-6	1	1	1	1	
288M471	2	2	2	2	
288M460	2	2	2	2	
288M468	2	2	2	2	
288M391	2	2	2	2	
288073	22	22	22		
288M394-2		2	2	2	
288B5014-L				1	
288B5014 R				1	
-61	1	1	1	1	
288M426-61	1	1	1	1	
-68	1	1	1	1	
-67	2	2	2	2	
-66	2	2	2	2	
-65	1	1	1	1	
-64	1	1	1	1	
-63	1	1	1	1	
-62	1	1	1	1	
-60	1	1	1	1	
-59	1	1	1	1	
-58	1	1	1	1	
-57	1	1	1	1	
-56	1	1	1	1	
-55	1	1	1	1	
-54	1	1	1	1	
-53	1	1	1	1	
-52	1	1	1	1	
-50	1	1	1	1	
-49	2	2	2	2	
288M475-48	2	2	2	2	
288M425-47	2	2	2	2	
288M475-46	1	1	1	1	
-45	1	1	1	1	
-44	1	1	1	1	
-43	1	1	1	1	
-42	2	2	2	2	
-41	2	2	2	2	
-40	2	2	2	2	
-39	2	2	2	2	
-38	2	2	2	2	
-37	2	2	2	2	
-36	2	2	2	2	
-35	2	2	2	2	
-34	2	2	2	2	
-33	2	2	2	2	
-32	8	8	8	8	
-31	8	8	8	8	
-30	2	2	2	2	
-29	2	2	2	2	
-28	2	2	2	2	
-27	2	2	2	2	
-26	2	2	2		
-25	2	2	2		
-24	2	2	2	2	
-23	2	2	2	2	
-22	1	1	1	1	
-21	1	1	1	1	
-20	1	1	1	1	
-19	1	1	1	1	
-18	1	1	1	1	
-17	1	1	1	1	
-16	1	1	1	1	
-15	1	1	1	1	
-14	2	2	2		
-13	2	2	2	2	
-12	2	2	2	2	
-11	1	1	1	1	
-10	1	1	1	1	
-9	1	1	1	1	
-8	1	1	1	1	
-7	1	1	1	1	
-6	1	1	1	1	
-5	1	1	1	1	
-4	1	1	1	1	
-3	1	1	1	1	
-2	1	1	1	1	
288M475-1	1	1	1	1	

-75				2	
288M425-76				2	
-77				2	
-76				2	
288M475-75				2	
QS761-KS-15	2				
AN51006-8	4	6	6	6	
AN365 D6	4	6	6	6	
AN442 D4					
AN442 D6					
AN442 D5					
QS761-KS225		2	2	2	
-74	1	1	1	1	
-73	1	1	1	1	
-72	1	1	1	1	
-71	1	1	1	1	
-70	1	1	1	1	
288M475-69	1	1	1	1	
PARTS		PBY-1	PBY-2	PBY-3	-550

-68	PBY-5B	288B5475	1
-69	PBY-5B	288B5475	1
-98	PBY-5B	288B5475	1
-550	PBY-5	288B1000	
	PBY-4	288B1000	
	PBY-3	288B1000	
	PBY-2	288B1000	
	PBY-1	288B1000	

288M475-21

FINISH:-
Z-P-2 [redacted] ON PBY-1
Z-P-2 [redacted] ON PBY-2 & FUTURE

FINISH CODE	
Z	ANODIC TREATMENT
P	P 27 PRIMER
AP	ALUMINIZED PRIMER
C	CADMIUM PLATE

SEE DWG 288M425 FOR STRINGER CUTOUTS

SKIN LINE

8 5/16 — 8 5/16 — 7 1/4 — 7 1/4 — 7 9/16 — 25 1/8 — 21 1/32

11/16

61 1/4 R.

30 R.

98 11/16

8 R.

51 13/16 R.

(-77) .040 AL. ALLOY SHEET SPEC. 47A10 COND.T USED ON -550 ASSY ONLY

(F)
(76) 5/8 x 5/16 x 1/16 EXT. ANGLE } ON -550 ASS'Y.
(75) DIE # K13624
RIVET SAME AS -33, -34 (REF.)

(32) (REF)
(31)

12 R. HEX 288B1391 & 288B1391-2 & AN51006-8 & AN365 D6 } 6 REQ'D PBY-3 PBY-4

(66) (REF)
(67)

(33) (REF)
(34)

288B1391 PBY-1 ONLY QS761-KS-15 AN51006-8 AN 365 D6

THIS DIM 60N PBY-1 ONLY 5 1/2 ON PBY-2 & PBY-3, PBY-4

DATUM "B" (ADM)

22°30'

13

99 25/64

BELTFRAME SYMETRICAL ABOUT Ø

AN442 D5 DO NOT RIVET ONE SIDE UNTIL ASSEMBLY

7/8

SKIN LINE

2 7/8 — 1 1/2 — 5 3/4

(68) (REF)

61 1/4 R

SECTION A-A FULL SIZE

(68) BULB ANGLE 3/8 x 3/8 x .060 ALCOA DIE K1339

3/8

FORWARD

288B1391 (REF)

VIEW B-B HALF SIZE

VIEW SHOWN - PORT SIDE LOOKING FORWARD

EXCEPT AS NOTED ON THIS DRAWING BY [ ] DIMENSIONS THE CONSTRUCTION OF THIS BELTFRAME IS STRUCTURALLY SIMILAR IN EVERY DETAIL TO BELTFRAME 4.25 (NOT INCLUDING CLIPS OR PARTS OF, OR FOR ATTACHING FURNISHINGS) REFER TO DWG. 288M425 FOR INFORMATION NOT GIVEN HERE. PARTS FOR THIS DWG. NUMBERED SIMILAR TO DWG. 288M425. FOR TABLE OF BULKHEAD ANGLES SEE 288036.

ALL AL. ALLOY SHEET MST SPEC 47A10 (COND. T.) ALLOY 24-T EXCEPT AS NOTED
ALL AL ALLOY EXTRUSIONS SPEC 4649 (COND. T) ALLOY 24-T EXCEPT AS NOTED
HEAT TREAT ALL COND. A MATERIAL PER SPEC. 3P53 (COND. T)
RIVETS AL. ALLOY EXCEPT AS NOTED.

REPLACES 288M475 OF 1-8-38											
REPLACED BY											
LIMIT ON DIMENSIONS UNLESS OTHERWISE SPECIFIED											
SCALE 3" = 1'-0"											
AC											
NAVY NOTED											
MATERIAL											

APPROVED 4-29-37 DATE
19.0 CALC. WT. ACT WT

O.H.	MODEL	NEXT ASSY	REQ.	PARTS
REQUIREMENTS PER AIRPLANE				MAT.

PARTS LIST PER ASSY.
PBY-1 PBY-2 PBY-3 -550

SPEC.	HEAT TREAT	FINISH
NOTED	NOTED	NOTED

I.O.C. Thursday Miller			
736-35 63-37			
DRAFT	CHECK	EXAM.	ENG.

CONSOLIDATED AIRCRAFT CORP. BUFFALO, N.Y.
STAMP PT. No. WHERE SHOWN

NAME BELTFRAME - HULL - STATION 4.75

OPP HAND —
DWG. SIZE G
28B1475

Sheldon Anderson Co. Inc. Buffalo
Imperial Tracing Cloth

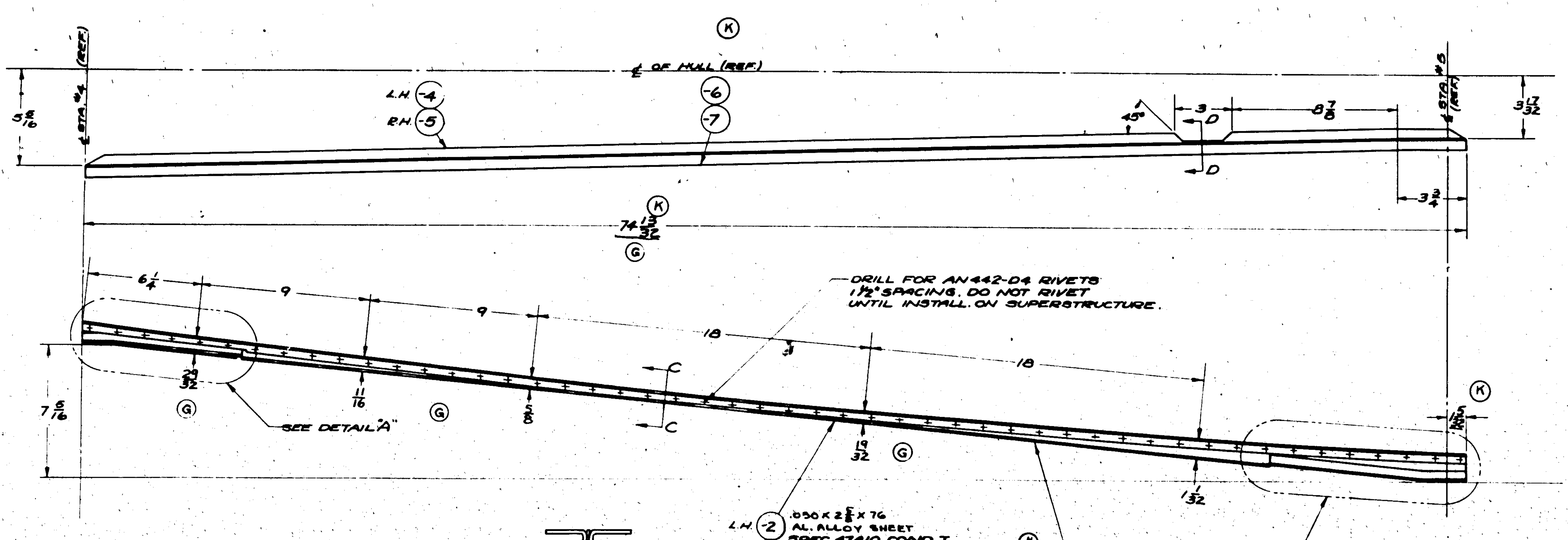

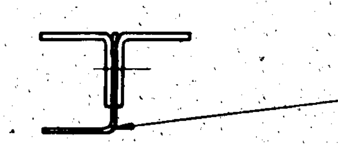

SECTION C-C ~ FULL SIZE

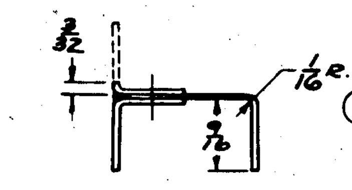

SECTION D-D ~ FULL SIZE

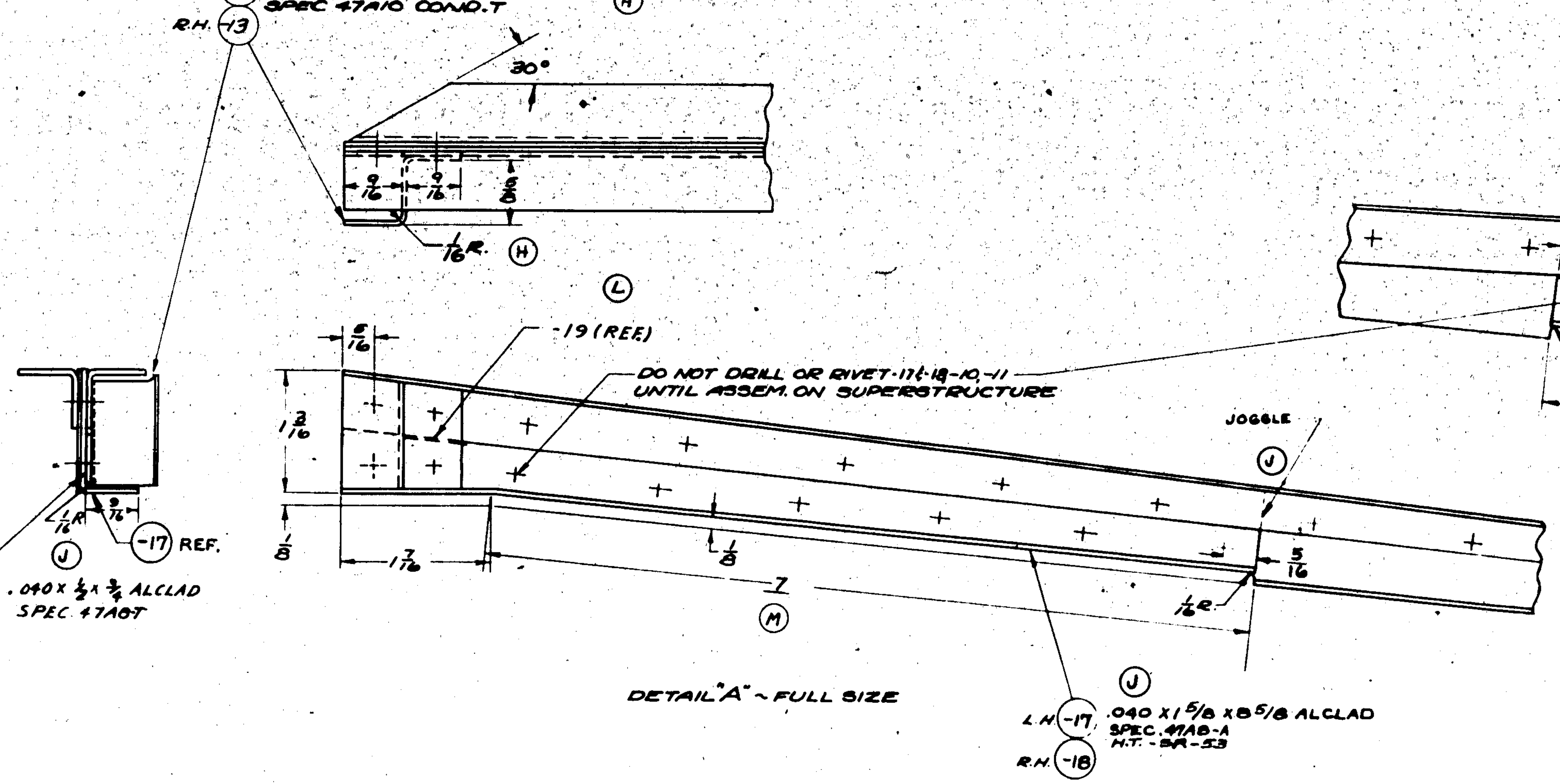

DETAIL "A" ~ FULL SIZE

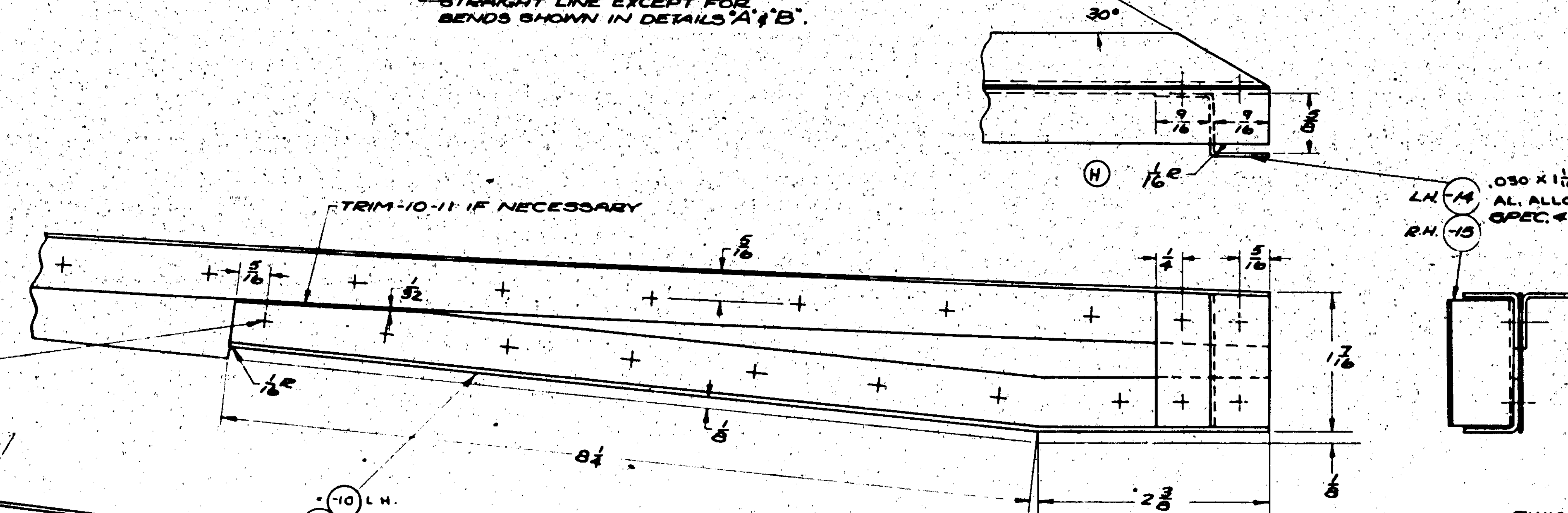

DETAIL "B" ~ FULL SIZE

ALL RIVETS AN442-D4

LET	ALTERATION	DATE	
F	TRACED		
G	C.O. #7723 — 74 3/16 WAS 74 5/16, 29/32 WAS 7/32, 11/16 WAS 25/32, 5/8 WAS 11/16, & 19/32 WAS 21/32.	9-21-38	
H	CHG'D MAT'L .OF -2-3-12 -13, -14, -15: ST WAS SO. CHG'D 1/16 R DIM (2) WERE 1/32 R. NO WT. CHG.	3-7-42	
J	E.O. A24763 — CHG'D DET. "A": CHG'D -8 & -9 TO -17 & -18 RESP. REMV'D DIMS. 1/32, 1/4, & 5/32 R. ADDED SHIM UNDER -12, DIM. 3/32 & 1/16 R. WT. CHG. NEG.	3-7-42	
K	E.O. A 26144 — CHG'D DIMS. 74 13/32 WAS 74 1/16, 1 5/32 WAS 1 1/16. REMOVED DIM. 73 1/4 (REF.) WT. CHG. NEG.	3-7-42	
L	ASSIGNED -19 TO SHIM ADDED BY "J" CHG (NO WT CHG)	3-7-42	PARSLEY
M	E.O. 32976 — 7 WAS 7 1/4 (WT. CHG NEG)	4-15-42	
N	FROM FACE, REMOVED "9/16 X 9/16 X .040 PLAIN ANGLE, SPEC. 46A9, EXTRUDED AL. ALLOY COND. T. (24ST)" FROM -4, -5, -6 & -7. FROM -10 & -11, REMOVED "K6240 X 11, AL. AL. EXT., SPEC. 46A9 COND. T." TO FACE ADDED MAT'L NOTE. ADDED STOCK SIZE TO -2, -3, -12, -13, -14, & -15 (NO WT CHG)	7-7-43	KNIGHT

SUPPLIES & EQUIPMENT CLASSIFICATION

FINISH CODE	
Z	ANODIC TREATMENT
P	Z-27 PRIMER
AP	ALUMINIZED PRIMER
C	CADMIUM PLATE
GP	GREEN PRIME

FINISH:
Z-P-2GP ON PBY-1
Z-P-2GP ON PBY-2 & FUTURE

ORDER OF INSTALLATION ON SUPERSTRUCTURE
1. DRILL AND RIVET -2, -3 TO SUPERSTRUCTURE
2. DRILL AND RIVET -17, -18 AND -10, -11 TO SUPERSTRUCTURE AND THEN TO -2-3.
3. RIVET -4, -5 AND -6, -7 TO -2, -3
4. RIVET -12, -13, -19, & -14, -15 AS SHOWN.

(N)
MATERIAL NOTE:-
1.- MATERIAL FOR -4, -5, -6, -7 MAY BE:
(A) Y-2-A11T X 76, OR
(B) 24ST AL. ALLOY EXTR., K6240 X 76, 46A9. COND. T.
2.- MATERIAL FOR -10 & -11 MAY BE:
(A) Y-2-A11T X 11, OR,
(B) 24ST AL. ALLOY EXTR., K6240 X 11, 46A9 COND. T.

O.H.	MODEL	NEXT ASSY.	REQ.	ST'D PARTS	PART NO.	PBY-1 LH	PBY-1 RH	PBY-2 LH	PBY-2 RH	PBY-3 LH	PBY-3 RH	COMM. #2 LH	COMM. #2 RH	LH	RH
					-19	1	1	1	1	1	1	1	1		
					-18		1		1		1		1		
					-17	1		1		1		1			
L / R	28-5MC, MN	28B5005	1 EA		-15		1		1		1		1		
L / R	28-5ME, MN	28B5005	1 EA		-14	1		1		1		1			
L / R	28-5MA, MC	28B5005	1 EA		-13		1		1		1		1		
L / R	PBY-5, 5A, 5B	28B5005	1 EA		-12	1		1		1		1			
-1	PBY-4	28B1005			-11		1		1		1		1		
	PBY-4	28B1005			-10	1		1		1		1			
-1	COMM. #2	28B1005													
	COMM. #2	28B1005													
-1	PBY-3	28B1005			-7		1		1		1		1		
	PBY-3	28B1005			-6	1		1		1		1			
-1	PBY-2	28B1005			-5		1		1		1		1		
	PBY-2	28B1005			-4	1		1		1		1			
-1	PBY-1	28B1005			-3		1		1		1		1		
	PBY-1	28B1005		AN442-D4	-2	1		1		1		1			

REQUIREMENTS PER AIRPLANE | MAT. | PARTS LIST PER ASSY.

28B1480 OF	LCW 11-26-35
REPLACES 11-21-35	APPROVED / DATE
REPLACED BY	CALC. WT. / ACT. WT.
1/32	3" = 1'-0" &
LIMIT ON DIMENSIONS UNLESS OTHERWISE NOTED	SCALE NOTED

[redacted]

A C					
NAVY NOTED	NOTED	NOTED	NOTED	10/21/37 Haley	
MATERIAL	SPEC.	HEAT TREAT	FINISH	DRAFT	CHECK / EXAM. / ENG.

CONSOLIDATED AIRCRAFT CORP. SAN DIEGO, CALIF.

NAME: STRIP-HULL-SUPERSTRUCTURE GAS FUME SEALING

OPP. HAND 28B1480-1

DWG. SIZE G 28B1480

SUPPLIES & EQUIPMENT CLASSIFICATION			
LET	ALTERATION	DATE	BY
A	TRACED	9-20-37	CONV. DWG.
B	MATERIAL WAS A-57 COND. T	5-23-41	[illegible]
C	10⅛ DIM. WAS 11 11/16 ; 2⅜ WAS 1 11/16	5-7-42	[illegible]
	WT. CHANGE NEG.	---	---
D	IN TABULATION BOX STA°8 ANGLE 3° WAS 3.5° ; STA° 4.125 ANGLE 3° WAS 4.5° ; STA° 4.25 ANGLE 6° WAS 9° ; STA° 4.375 ANGLE 10° WAS 11° ; STA° 4.5 ANGLE 10° WAS 13° ; STA° 4.625 ANGLE 10° WAS 14° ; STA° 4.75 ANGLE 10° WAS 14° 30' ; STA° 4.875 ANGLE 10° WAS 13° 30' ; STA° 5 ANGLE 10° WAS 12° NO WT. CHG.	8-10-43	SHELTON
E	ON FACE OF DWG. RMVD 30° BEVEL ON END VIEW OF 485 ANGLES. NEG WT. CHG.	9/25/43	[illegible]

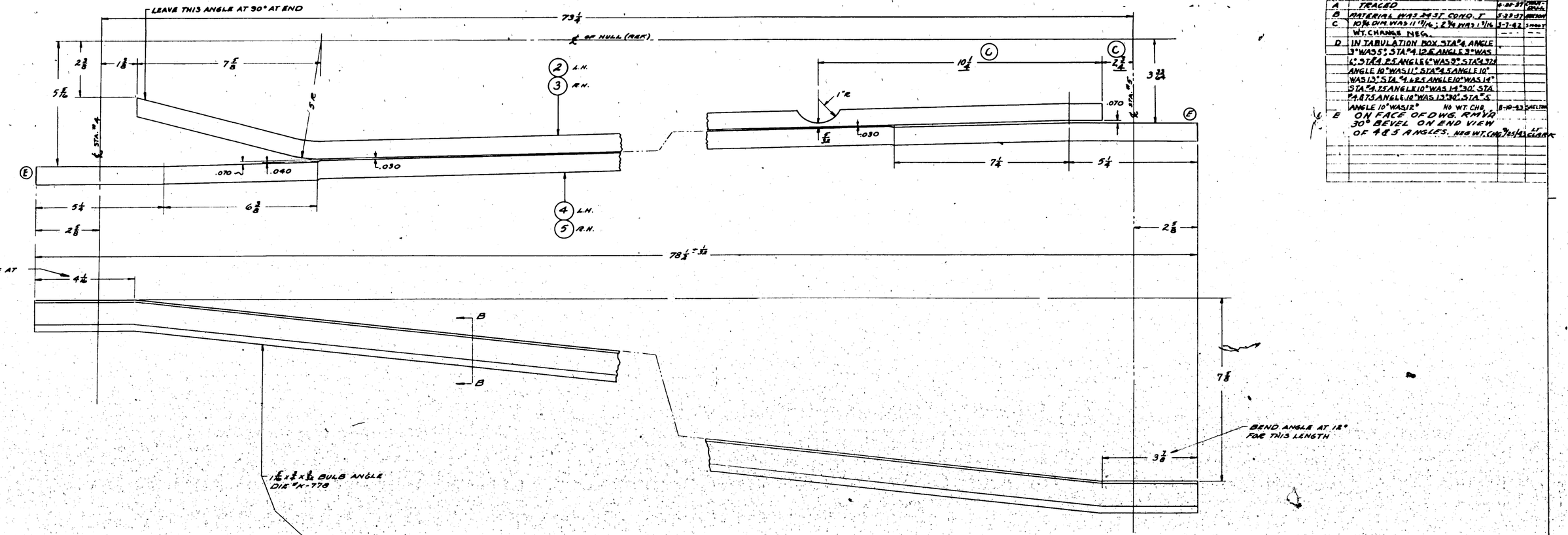

TYPICAL SECTION B-B
SCALE 12"=1'0"

STATION	ANGLE A
#4	3°
#4.125	3°
#4.25	6°
#4.375	10°
#4.5	10°
#4.625	10°
#4.75	10°
#4.875	10°
#5	10°

(D)

STATIONS ARE EQUALLY SPACED BETWEEN STATIONS #4 & #5 AT 9 9/32

FINISH CODE	
Z	ANODIC TREATMENT
P	P-27 PRIMER
AP	ALUMINIZED PRIMER
C	CADMIUM PLATE

FINISH:
Z-P-2 BAN ON PBY-1
Z-P-2 AL ON PBY-2 & FUTURE

-5	2S-S AMN 2S-T AMC	2885005	EA						
-5	2S-T MA, MC MR & MN	2885005	EA						
-5	PBY-2S PBY-2S ESA	2885005	EA						
-4	2S-T AMN 2S-T AMC	2885005	EA						
-4	2S-T MA, MC MR & MN	2885005	EA						
-4	PBY-2S PBY-2S ESA	2885005	EA						
-3	2S-T AMN 2S-T AMC	2885005	EA						
-3	2S-T MA, MC MR & MN	2885005	EA						
-3	PBY-2S PBY-2S ESA	2885005	EA						
-2	2S AMN 2S AMC	2885005	EA						
-2	2S MA, MC MR & MN	2885005	EA						
-2	PBY-2S PBY-2S ESA	2885005	EA						
-5	PBY-3 4-4	2881005	/						
-4	PBY-3 4-4	2881005	/						
-3	PBY-3 4-4	2881005	/						
-2	PBY-3 4-4	2881005	/						
-5	PBY-2	2881005	/						
-4	PBY-2	2881005	/						
-3	PBY-2	2881005	/						
-2	PBY-2	2881005	/						
-5	PBY-1	2881005	/	2881483-5	/	/	/		
-4	PBY-1	2881005	/	-4	/	/	/		
-3	PBY-1	2881005	/	-3	/	/	/		
-2	PBY-1	2881005	/	2881483-2	/	/	/		

REPLACES	APPROVED	4-28-37
REPLACED BY	DATE	
LIMIT OR DIMENSIONS UNLESS OTHERWISE SPECIFIED ± .005	CALC BY [illegible]	ACT BY
	SCALE 6"=1'0" 12"=1'0"	
	AC	
	NAVY	
	MATERIAL	

O.H.	MODEL	NEXT ASSY.	REQ.	PARTS	PBY-1	PBY-2	PBY-3
REQUIREMENTS PER AIRPLANE			MAT.	PARTS LIST PER ASSY.			
				BOI. [illegible]			
42A9 COND. A		3838 (CONST)	NOTED	FINISH	11-30-37	5-6-37	
SPEC.			HEAT TREAT		DRAFT	CHECK	ENGR.

	NAME	OPP. HAND
CONSOLIDATED AIRCRAFT CORP. BUFFALO, N. Y.	ANGLE-HULL-SUPERSTRUCTURE INNER FAIRING TOP	DWG. NO. 2881483
STAMP PT. No. WHERE SHOWN		SIZE G

HAMILTON CO., INC. BUFFALO
PRINTED IN U.S.A.

E.O. 19893
E.O. 21056
E.O. 28208A

E.O. 27791A
E.O. A9869A

SUPPLIES & EQUIPMENT CLASSIFICATION			
LET	ALTERATION	DATE	BY
A	TRACED	4-28-37	[illegible]
B	CREATED -1 & -2. 3/16 HOLES ADDED.	10-30-40	[illegible]
C	ADDED DETAIL OF -3		
D	REPLACED DIM. 2 9/16 WITH LETTER "A" & 2 5/8 WITH LETTER "B". ADDED -6 & -7. ADDED ASSEM -4.	10-30-40	[illegible]
E	CHANGED: B/M	12-5-40	[illegible]
F	ADDED 3/16 DRAIN HOLE, CUTOUT 3/4 x .82 x 1 1/4, 23 & 27 1/2 DIMS. DETAIL OF CUTOUT. NOTE, VIEW LOOKING UP ETC WAS VIEW OF FWD SIDE OF BLK. #5 (NO WAIGHT CHG.)	3-9-42	[illegible]
G	IN VIEW LOOKING UP FWD -- "34 7/8" FOR -7 WAS 23 5/8. ADDED NOTE "THIS PROJ -- ONLY" NEG. WT. CHG.	7-1-42	[illegible]

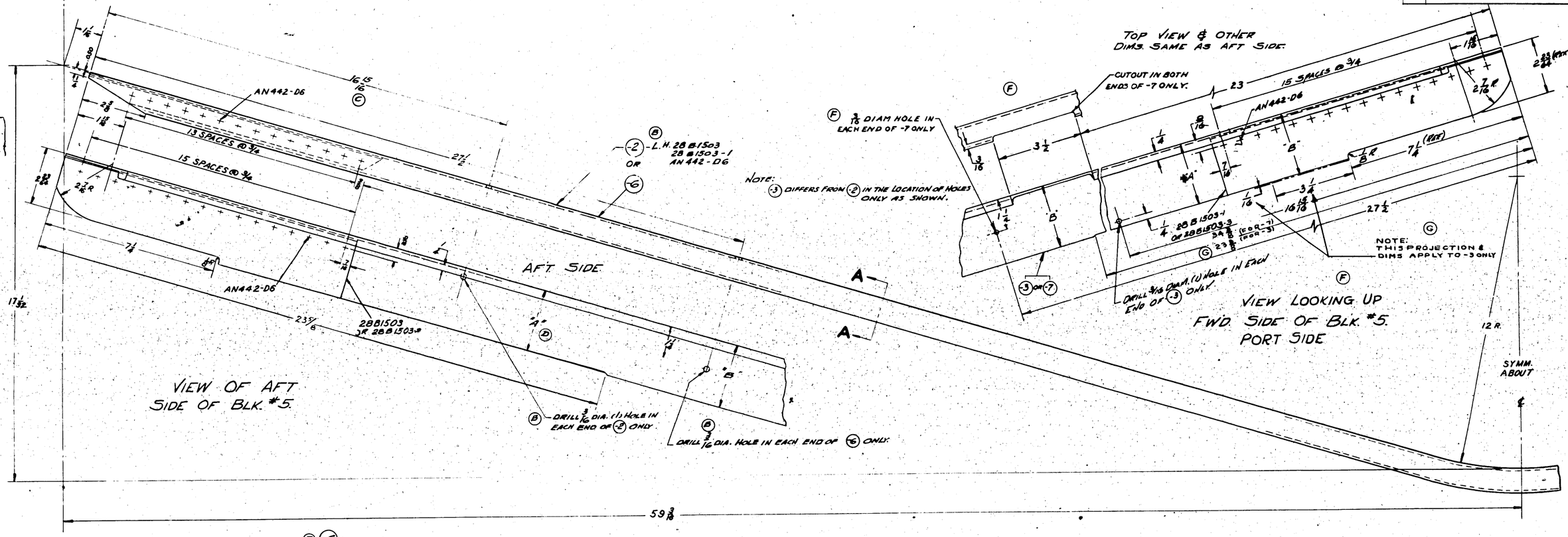
AN442-D6
15 SPACES @ 3/4
13 SPACES @ 3/4
AN442-D6
2881503 OR 2881503-3
AFT SIDE
A
A
-2 OR -6
-2 - L.H. 2881503 2881503-1 AN442-D6
Note: -3 differs from -2 in the location of holes only as shown.
DRILL 3/16 DIA. (1) HOLE IN EACH END OF -2 ONLY
DRILL 3/16 DIA. HOLE IN EACH END OF -6 ONLY.
59 3/16

VIEW OF AFT SIDE OF BLK. #5.

TOP VIEW & OTHER DIMS. SAME AS AFT SIDE.
F
3/16 DIAM HOLE IN EACH END OF -7 ONLY
CUTOUT IN BOTH ENDS OF -7 ONLY.
15 SPACES @ 3/4
AN442-D6
23
3 1/2
"A"
"B"
2881503-1 OR 2881503-3
34 7/8 (FOR -7) (FOR -3)
23 5/8
-3 OR -7
DRILL 3/16 DIAM. (1) HOLE IN EACH END OF -3 ONLY
27 1/2
16 15/16
3 1/4
7 1/4 (REF)
2 7/16 R.
2 3/4 (REF) AND 2 3/4
NOTE: THIS PROJECTION & DIMS APPLY TO -3 ONLY
VIEW LOOKING UP FWD. SIDE OF BLK. #5. PORT SIDE
12 R.
SYMM. ABOUT

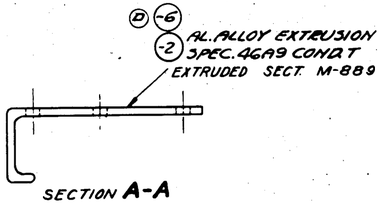

DASH NO.	DIM. "A"	DIM. "B"	WT.
-2	2 3/16	2 5/8	5.24
-3	2 3/16	2 5/8	5.24
-6	2 1/2	2 5/8	5.12
-7	2 9/16	2 5/8	5.24

-R	28-SMC6 MR	2881500	1 EA.				
-R	28-SMA6 MR	2881500	1 EA.				
-R	PBY-5B	2881500	1				
-R	PBY-5	2881500	1				
-L	28-SMC6 MR	2881500	1 EA.				
-L	28-SMA6 MR	2881500	1 EA.				
-L	PBY-5B	2881500	1	2881502-7			
-L	PBY-5	2881500	1	2881503-3			
-4	PBY-5A	2881500	2	2881503-2			
-4	PB-SMC	2885590	2	2881502-6			
-4	PB-SMN	2885590	2	2881502-5			
(D) --	PBY-4	2881500		AN442-D6	-	-	-
	PBY-3	2881500		2881503-1	/	/	/
	PBY-2	2881500		2881503	/	/	/
	PBY-1	2881500		2881502-2	/	/	/

REPLACES									
REPLACED BY									
LIGHT ON DIMENSIONS UNLESS OTHERWISE STATED ± 1/64	APPROVED [illegible] 4-28-37 DATE								
[redacted]	CALC WT. 324 ACT WT.	O.H.	MODEL	NEXT ASSY	REQ.	PART NO			
	SCALE 6"=1'-0"	REQUIREMENTS PER AIRPLANE				MAT.			PARTS LIST PER ASSY.
	AC								
	NAVY NOTED	NOTED	NONE		NONE		LDC	4-28-37	MB
	MATERIAL	SPEC.	HEAT TREAT		FINISH		DRAFT	CHECK	ENGR.
	CONSOLIDATED AIRCRAFT CORP. BUFFALO, N.Y.	NAME ANGLE- HULL- LOWER BULKHEAD #5					OPP. HAND		
	STAMP PT. No. WHERE SHOWN						SIZE G	28B1502	

LET	ALTERATION	DATE	BY
F	TRACED & CHG 7 7/16 DIM TO 8, & ADDED 1 7/8 & 2 DIM. WT. CHG. NEG.	11-43	RUSH
G	REM DIMS. 42 3/8, 1 3/8, 15 3/8, 1/2, 5 1/8, & 8. ADDED DIMS. 6 1/2, 6 13/16, 8 7/16, 1 3/8, 8 17/32, 6 7/16, 8 3/16, 7/32, 15/32, 15/32, 7/16, 1/4, 8 5/16, 6 5/8, 1 3/32, 6 6/32, 41 5/16, 37 3/32, 30, 22 1/4, 18, 12, 6, 41 29/32, 42 3/16, 42 1/2 & 2. 7 27/32. NEG. WT. CHG.	6-44	RUSH

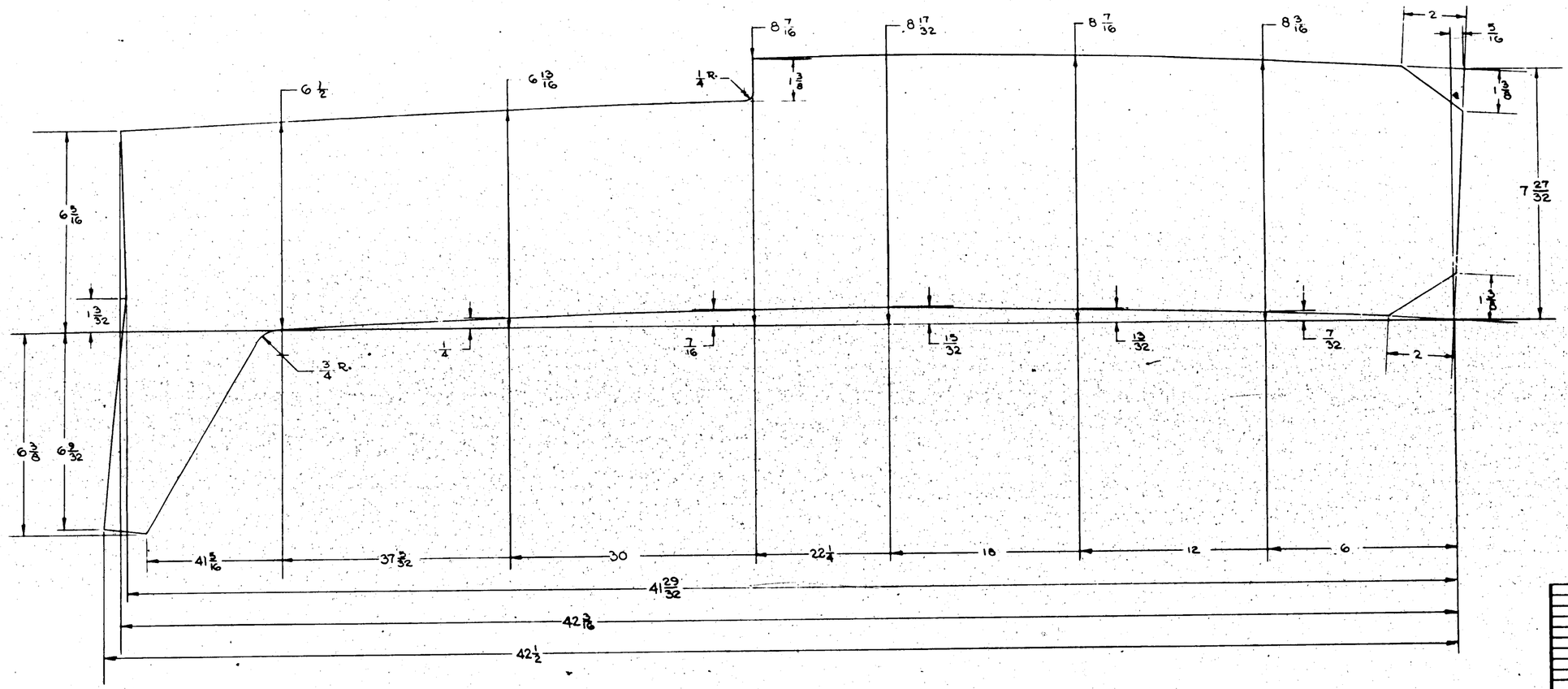

PART NO	STOCK	MATERIAL	SPEC.	LH REQ -0	RH REQ -2	LH REQ -3	RH REQ -4	LH REQ -5	RH REQ
@ .051 X 14 3/4 X 43 1/2		A.C. 24ST	QQ-A-250/4						

PARTS LIST PER ASSY.

PART OR ASSY NO.	MODEL	NEXT ASSY.	REQ.
	28B-SHK-MTR	28B1500	1 EA
	28B-SHK-MTR	28B1500	2 EA
	28B-SHK-MTR	28B1500	2 EA
	PBY-5	28B1500	2
	PBY-5A	28B1500	2
	PBY-5A	28B1500	2
	PBY-4	28B1500	2
	PBY-3	28B1500	2
	PBY-2	28B1500	2
	PBY-1	28B1500	2

REQUIREMENTS PER AIRPLANE

REPLACES 28B1518 - 9-29-39	1.73 DWG. WT.
REPLACED BY	ADV. WT.

LIST OF ENGINEERING ORDERS (Dimensional Inspection)	SCALE 6" = 1'-0"
STAMP PART NUMBER WHERE SHOWN	

A C		L.O.C	STIER		MILLER	
NAVY NONE	NONE	9-29-39				6 mils
HEAT TREAT	FINISH	DRAFT	CHECK	STRUCT	MAT	APPROV

NAME
PLATE - HULL - BULKHEAD #5 EDGE

CONSOLIDATED AIRCRAFT CORP. SAN DIEGO, CALIF.

OPP. HAND

DWG. G SIZE

28B1518

R

81518

SUPPLIES & EQUIPMENT CLASSIFICATION			
LET	ALTERATION	DATE	BY
D	TRACED	4-30-37	GLOMAN

DOOR BASE LINE

SECTION D-D

SECTION C-C

SECTION B-B

SECTION A-A

POINT ON BASE LINE

POINT "B"

8 PUNCH PRICKS THIS SIDE

TWIST VERTICAL LEG CONFORMING WITH SECTIONS C-C AND D-D

SECTION G-G SHOWING KNIFE EDGE END

VIEW E

VIEW F

POINT "A"

MAKE FROM 1½ X 1⅛ X ⅛ ALCOA SECTION #2499 AL. ALLOY TEE 24 S0

NOTE: HORIZONTAL FLANGE IS BENT AROUND THIS POINT "A"

℄ OF SYMMETRY

FINISH:
Z-P-[illegible] ON XPBY-1 & PBY-1
Z-P-[illegible] ON PBY-2 & FUTURE

FINISH CHART	
A	[illegible]
B	[illegible]
C	[illegible]

NOTE: POINTS "A" & "B" ARE IDENTICAL WITH THOSE OF BASE LINE DIAGRAM 28B1526 - REF.

PBY-5A/B	28B1527 1EA.
PBY-4	28B1527 1
PBY-3	28B1527 1
PBY-2	28B1527 1
PBY-1	28B1527 1
XPBY-1	28B1527 1

REPLACES

REPLACED BY

LIMIT ON DIMENSIONS UNLESS OTHERWISE SPECIFIED ± 1/32

[redacted]

APPROVED 4-30-37 DATE

CALC BY ACT WT.

SCALE 12"=1'-0"

AC

NAVY NOTED MATERIAL

CONSOLIDATED AIRCRAFT CORP. BUFFALO, N.Y.

O.H	MODEL	NEXT ASSY	REQ.	ST'D PARTS	LH REQ.	RH REQ.	PART NO	LH REQ.	RH REQ.
REQUIREMENTS PER AIRPLANE				MAT.	PARTS LIST PER ASSY				
					Alcoa	Aloca			
46A9 comp SR-53 Cond. T				NOTED	#4436	5657			
SPEC	HEAT TREAT			FINISH	DRAFT	CHECK	EXAM	ENG.	

NAME BASE-HULL-TUNNEL GUN DOOR OPENING FRONT FRAME

OPP HAND

DWG G SIZE 28B1530

* TAMP PT. No. WHERE SHOWN

SULLIVAN McKEEVER CO. INC. BUFFALO
IMPERIAL TRACING CLOTH

SUPPLIES & EQUIPMENT CLASSIFICATION			
LET	ALTERATION	DATE	BY
J	TRACED	4-28-37	[redacted]
K	ADDED DETAIL K	1-18-38	[redacted]
L	REMOVED 7/16 DIM. (2 PLACES). DIM. 7/8 WAS 11/16, 1 1/2 WAS 1 3/16 & 1 1/2 (2 PLACES) WAS 5/16 (2 PLACES). ADDED 6 3/4 DIM		
	WT. CHG. NEG.	5-25-43	[redacted]

BASE LINE
IDENTICAL WITH BASE LINE A-B OF DIAGRAM 28B1526 PLT

1/8 I 45° TAPER

TRUE

AN 442 DB

4 PRICK PUNCHES ON TOP

5 1/2 EQUAL SPACES

(-2) SHOWN (-3) OPP
.080 AL ALLOY SN 2450 SPEC 47310 COND A HT SP53 COND T

SHOWN
.128 AL ALLOY SN SPEC 47310 COND T (GAST) HT NONE

GP-GREEN PRIME FINISH COAT [redacted]

4 PRICK PUNCHES THIS SIDE

7 PRICK PUNCHES THIS SIDE

FORM GRADUALLY FROM SECT A-A TO SECT B-B OVER THIS REGION

SEE DETAIL "K" FOR XP3Y-1 AND PBY-1 CUTOUT ONLY

POINT BB

BASE LINE

6 1/4

35-11/16

DRILL #18 (.1695) 2 HOLES

℄ OF LOCKING KEY BUSHING ENGR REF

THIS CUTOUT ON XP3Y-1 & PBY-1 ONLY

DETAIL K

SECTION D-D

END VIEW C

SECTION B-B

SECTION A-A

SECTION E-E

POINT OF BASE LINE

FOR DIMENSION SEE TOP VIEW

ENG REF

FINISH:
Z-P-GP ON XP3Y-1 & PBY-1
Z-P-GP ON PBY-2 & FUTURE

R	[redacted]	28B1527	1EA
L	[redacted]	28B1527	1EA
R	PBY-5	28B1527	1
L	PBY-5	28B1527	1
R	PBY-5 MOD	28B1527	1EA
L	PBY-5 MOD	28B1527	1EA
-1	PBY-4	28B1527	
	PBY-4	28B1527	

REF - FOR XP3Y-1 ARRANGEMENT SEE SKETH 20A14
FOR XP3Y-1 REPLACEMENT USE PRESENT DWG

-1	PBY-3	28B1527								
-1	PBY-2	28B1527								
	PBY-2	28B1531								
-1	XP3Y-1	28B1527	AN442DD6	12	12	12	12	12	12	12
	XP3Y-1	28B1527	-4	1	1	1	1	1	1	1
-1	PBY-1	28B1527	-3	1	1	1	1	1	1	1
	PBY-1	28B1527	-2	1	1	1	1	1	1	1

REPLACED 28B1531 OF 2-19-5 — XCB 4-29-37 APPROVED DATE
REPLACED BY
LIMIT ON DIMENSIONS UNLESS OTHERWISE SPECIFIED ± [redacted]
100 CALC. WT. ACT. WT.
SCALE 12"-1'0"

O.H.	MODEL	NEXT ASSY.	REQ.	ST'D PART	REQUIREMENTS PER AIRPLANE	MAT.	PARTS LIST PER ASS'Y
AC							
NAVY	NOTED		NOTED	NOTED	NOTED	NOTED	3-4-38 6-9-37
MATERIAL			SPEC.	HEAT TREAT		FINISH	DRAFT CHECK FRAM.

CONSOLIDATED AIRCRAFT CORP. BUFFALO, N.Y.
STAMP PT. No. WHERE SHOWN

NAME: FRAME-HULL-TUNNEL GUN DOOR OPENING FRONT
OPP HAND 28B1531-1
DWG G SIZE 28B1531

Consolidated-Vultee Co., Inc. Buffalo Division, Vultee Corp.

SUPPLIES & EQUIPMENT CLASSIFICATION			
LET	ALTERATION	DATE	BY
C	TRACED	4-29-37	[illegible]

KNIFE EDGE TAPER

SECTION C-C

.5 PRICK PUNCHES THIS SIDE

POINT "C"

VIEW B

45° TRIM

DOOR BASE LINE

TANGENCY OF ARCS

POINT "D"

VIEW A

¢ SYMMETRY

NOTE:- HORIZONTAL FLANGE IS CONTINUOUS AND IN VIEW 'A' IS BENT AROUND THIS POINT.

AL ALLOY EXT. SECTION
ALCOA DIE# M-2499-24 SO
(1½ x 1⅛ x 1/16)

FINISH:
2-P[illegible] ON XPBY-1 & PBY-1
2-P[illegible] ON PBY-2 & FUTURE

NOTE:- POINTS "C" & "D" ARE IDENTICAL WITH THOSE OF BASE LINE DIAGR. 28B1526 (REF.)

PBY-5A&B	28B1527	164			
PBY-4	28B1527				
PBY-3	28B1527				
PBY-2	28B1527				
PBY-1	28B1527				
XPBY-1	28B1527				

REPLACES

REPLACED BY

LIMIT ON DIMENSIONS UNLESS OTHERWISE SPECIFIED ± 1/32

APPROVED 4-29-37 DATE

CALC WT. 50 ACT WT

SCALE 2"=1'-0"

AC

NAVY NOTED

MATERIAL

CONSOLIDATED AIRCRAFT CORP. BUFFALO, N.Y.

STAMP PT. No. WHERE SHOWN

O.H | MODEL | NEXT ASSY | REQ. | PART NO

REQUIREMENTS PER AIRPLANE | MAT. | PARTS LIST PER ASSY.

ALCOA 24 SO T4 | NOTED

SPEC | HEAT TREAT | FINISH

NAME

BASE - HULL
TUNNEL GUN DOOR OPENING
REAR FRAME

DRAFT | CHECK | ENGR. | ENG.

OPP HAND

DWG. G 28B1535

SIZE

SUPPLIES & EQUIPMENT CLASSIFICATION			
LET	ALTERATION	DATE	BY
H	TRACED TO DATE	4-29-37	
I	ADDED DETAIL F-F	6-18-37	

THIS CUTOUT ON XP3Y-1 AND PBY-1 ONLY

DRILL 13 (.159) 4 HOLES

DOOR BASE LINE REF.

℄ OF LOCKING KEY BUSHING ENG. REF.

POINT "D" REF.

DETAIL F-F

SYMM. ABOUT ℄

POINT D

SECTION A-A

SECTION E-E

VIEW D

7 PRICK PUNCHES THIS SIDE

38 AN 442-D6

1 PRICK PUNCH ON TOP

12 EQUAL SPACES

DOOR BASE LINE

POINT C

POINT D

DOOR BASE LINE

VIEW C (-3 OMITTED)

53 EQUAL SPACES

2 ARCS TANGENT AT THIS POINT

POINT C

POINT D

SEE DETAIL F-F FOR XP3Y-1 & PBY-1 CUTOUT ONLY

℄ OF SYMMETRY

AN 425-D8 C'SK. THIS SIDE

POINTS C & D ARE IDENTICAL WITH THOSE OF BASE LINE DIAGRAM 28B1526 ALT

(3) 128 AL. ALLOY STR. 2450 SPEC. 47 AND COND A. NT SR 53. COND T.

(2) 061 AL. ALLOY SH. 2450 SPEC. 47 AND COND A. NT SR 53. COND T.

(-4) 064 AL. ALLOY SH. 24ST SPEC. 47 A10 COND T.

FINISH CODE

Z	[redacted]
B	
AP	
C	

FINISH:
Z-P-[redacted] ON XP3Y-1 & PBY-1
Z-P-[redacted] ON PBY-2 & FUTURE

PBY-5A&B	28B1527	EA.									
PBY-4	28B1527		-4	/	/	/	/				
PBY-3	28B1527	/	-3	/	/	/	/				
PBY-2	28B1527	/	28B1336-2	/	/	/	/				
PBY-1	28B1527	/	AN425-D3	2	2	2	2				
XPBY-1	28B1527	/	AN442-D6								

O.H.	MODEL	NEXT ASSY.	REQ	PART NO	1	2	3	4	5	6	7
					PBY-5A&B	PBY-4	PBY-3	PBY-2	PBY-1	XPBY-1	

REPLACES

REPLACED BY

LIMIT ON DIMENSIONS UNLESS OTHERWISE SPECIFIED ± 1/64

CALC WT. [redacted] ACT WT

SCALE 12"=1'-0"

X AN 4-29-37 APPROVED DATE

REQUIREMENTS PER AIRPLANE | MAT. | PARTS LIST PER ASSY.

AC

NAVY NOTED MATERIAL | NOTED SPEC. | NOTED HEAT TREAT | NOTED FINISH

DRAFT 4-30-36 | CHECK 6-9-37 | ENGR 4-6-36 | ENG.

CONSOLIDATED AIRCRAFT CORP. BUFFALO, N.Y.

STAMP PT. No WHERE SHOWN

NAME FRAME - HULL TUNNEL GUN DOOR OPENING REF

OPP. HAND

DWG. G

DWG. NO. 28B1536

SULLIVAN MERCERIZED CO. INC. BUFFALO IMPERIAL TRACING CLOTH

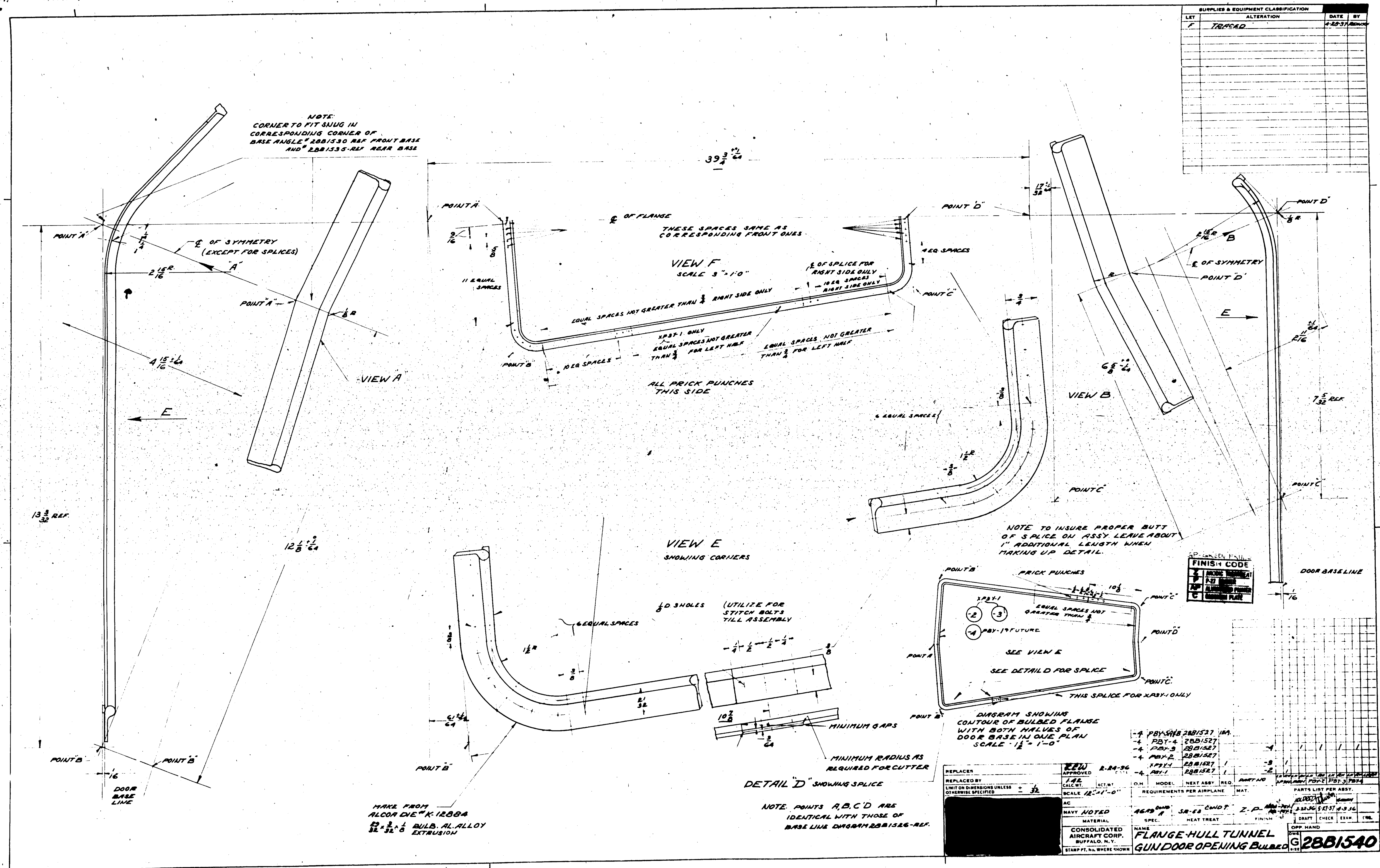
SUPPLIES & EQUIPMENT CLASSIFICATION
LET | ALTERATION | DATE | BY
F | TRACED | 4-28-37 | BENSON
NOTE:
CORNER TO FIT SNUG IN
CORRESPONDING CORNER OF
BASE ANGLE # 28B1530 REF FRONT BASE
AND # 28B1535-REF REAR BASE
POINT "A"
℄ OF SYMMETRY
(EXCEPT FOR SPLICES)
"A"
2 15/16 R.
4 15/16 ±1/64
1/8 R
VIEW "A"
E
13 3/32 REF.
12 1/8 +0/-1/64
POINT "B"
1/16
DOOR BASE LINE
39 3/4 +0/-1/64
POINT A
℄ OF FLANGE
THESE SPACES SAME AS
CORRESPONDING FRONT ONES
9/16
5/8
11 EQUAL SPACES
VIEW F
SCALE 3" = 1'-0"
℄ OF SPLICE FOR
RIGHT SIDE ONLY
10 EQ SPACES
RIGHT SIDE ONLY
4 EQ. SPACES
POINT "C"
EQUAL SPACES NOT GREATER THAN 3/4 RIGHT SIDE ONLY
XPBY-1 ONLY
EQUAL SPACES NOT GREATER
THAN 3/4 FOR LEFT HALF
EQUAL SPACES NOT GREATER
THAN 3/4 FOR LEFT HALF
POINT B
10 EQ SPACES
ALL PRICK PUNCHES
THIS SIDE
POINT "D"
17/32 ±1/64
2 15/16 R
B
℄ OF SYMMETRY
POINT "D"
R.
3/4
E
2 11/16 ±1/64
6 5/8 +0/-1/64
VIEW B
7 5/32 REF.
3/8
6 EQUAL SPACES
1 1/2 R
3/8
POINT "C"
DOOR BASE LINE
1/16
NOTE TO INSURE PROPER BUTT
OF SPLICE ON ASSY LEAVE ABOUT
1" ADDITIONAL LENGTH WHEN
MAKING UP DETAIL.
VIEW E
SHOWING CORNERS
1/8 D. 3 HOLES
(UTILIZE FOR
STITCH BOLTS
TILL ASSEMBLY
6 EQUAL SPACES
3/8
1 1/2 R
3/8
1/4 1/2 1/2 1/4
3/8
21/32
61/64 ±1/64
POINT "B"
10 7/8
MINIMUM GAPS
3/64
MINIMUM RADIUS AS
REQUIRED FOR CUTTER
DETAIL "D" SHOWING SPLICE
MAKE FROM
ALCOA DIE # K-12884
29/32 x 3/32 x 1/8 BULB. AL. ALLOY
EXTRUSION
NOTE. POINTS A, B, C, D ARE
IDENTICAL WITH THOSE OF
BASE LINE DIAGRAM 28B1526-REF.
GP-GREEN PRIME
FINISH CODE
Z | ANODIC TREATMENT
P | P-27 PRIMER
AP | ALUMINIZED PRIMER
C | CADMIUM PLATE
POINT "B"
PRICK PUNCHES
10 1/8
POINT "C"
XPBY-1
-2
-3
-4 PBY-1 & FUTURE
EQUAL SPACES NOT
GREATER THAN 3/4
POINT "D"
POINT A
SEE VIEW E
SEE DETAIL D FOR SPLICE
POINT "C"
THIS SPLICE FOR XPBY-1 ONLY
POINT "B"
DIAGRAM SHOWING
CONTOUR OF BULBED FLANGE
WITH BOTH HALVES OF
DOOR BASE IN ONE PLAN
SCALE 1 1/2" = 1'-0"
-4 PBY-5A/B 28B1527 1EA.
-4 PBY-4 28B1527
-4 PBY-3 28B1527
-4 PBY-2 28B1527
XPBY-1 28B1527 1
-4 PBY-1 28B1527 1
O.H. MODEL NEXT ASSY REQ. PART NO
REQUIREMENTS PER AIRPLANE MAT.
-4
-3
-2
PARTS LIST PER ASSY.
REPLACES
REPLACED BY
LIMIT ON DIMENSIONS UNLESS OTHERWISE SPECIFIED ± 1/32
[redacted]
APPROVED 2-24-36
1.42 CALC. WT. ACT. WT
SCALE 12" = 1'-0"
AC
NAVY NOTED
MATERIAL
46A9 COND A
SPEC.
SR-68 COND T
HEAT TREAT
Z-P
FINISH
2-22-36 5-27-37 4-3-36
DRAFT CHECK EXAM.
OPP. HAND
CONSOLIDATED
AIRCRAFT CORP.
BUFFALO, N.Y.
STAMP PT. No. WHERE SHOWN
NAME
FLANGE-HULL TUNNEL
GUN DOOR OPENING BULBED
DWG SIZE G
28B1540
SULLIVAN-MCKEOGAN CO., INC. BUFFALO
IMPERIAL TRACING CLOTH

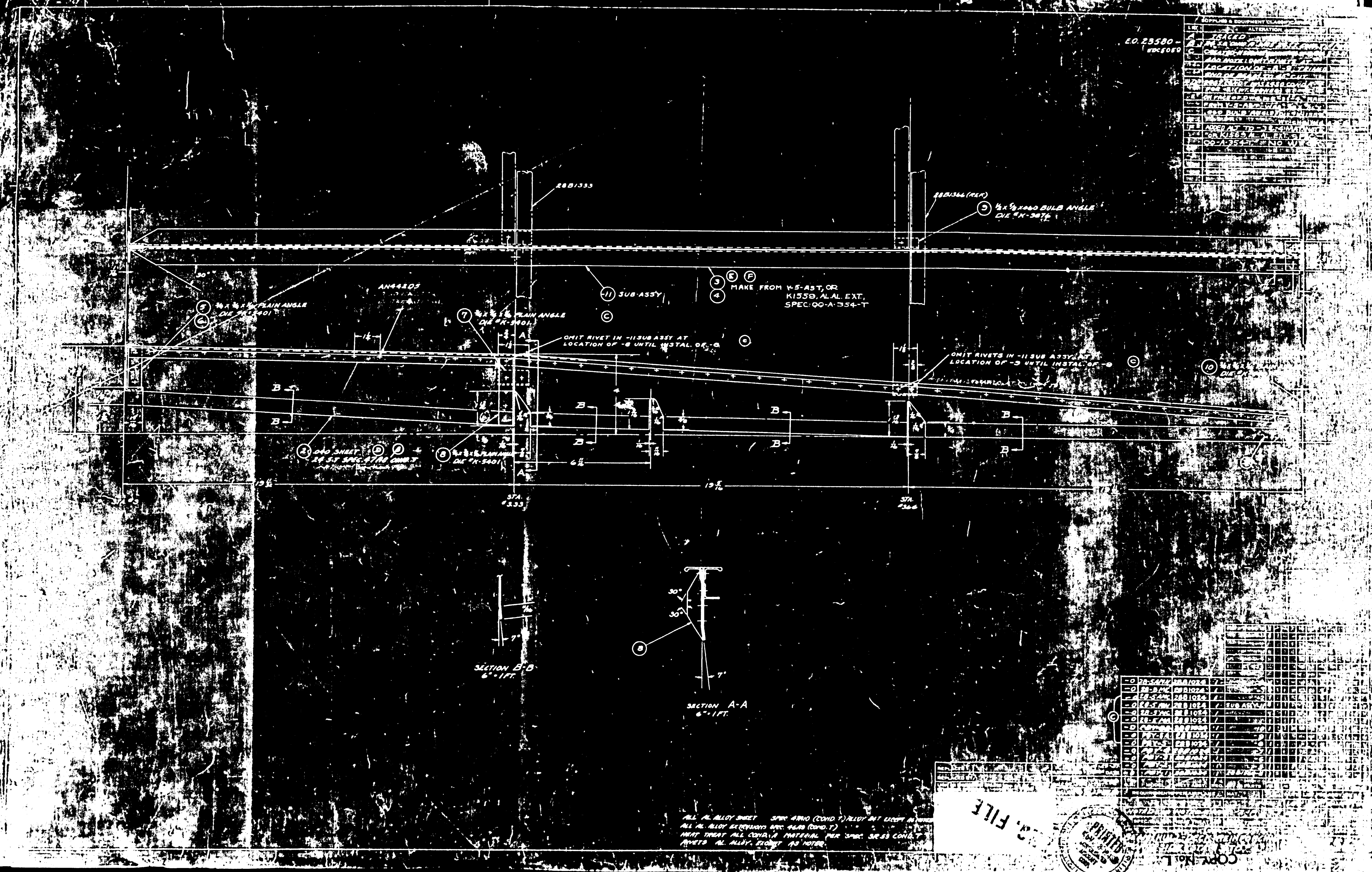

SUPPLIES & EQUIPMENT CLASSIFICATION
LET.
ALTERATION
E.O. 23580 -
EDC 5059
TRACED
ADD NOTE: OMIT RIVETS AT
LOCATION OF -8 -9 STRINGER
ON FACE OF DWG
ADDED ALT TO -3 & -4 MAT'L NOTE
"OR K1559, AL. AL. EXT. SPEC.
QQ-A-354-T" NO WT. C
28B1333
28B1366 (REF)
9 ½ x ⅝ x .060 BULB ANGLE DIE # K-3876
-11 SUB-ASSY
3 E F
4 MAKE FROM Y-5-A5T, OR K1559, AL. AL. EXT., SPEC. QQ-A-354-T
C
AN442D5
5 ¾ x ¾ x 1/16 PLAIN ANGLE DIE # K-5401
6
7 ¾ x ¾ x 1/16 PLAIN ANGLE DIE # K-5401
OMIT RIVET IN -11 SUB ASSY AT LOCATION OF -8 UNTIL INSTAL. OF -8
OMIT RIVETS IN -11 SUB ASSY AT LOCATION OF -9 UNTIL INSTAL. OF -9
10
30°
A
B
2 .040 SHEET 24 S.T SPEC. 4710 COND. T D
8 ¾ x ¾ x 1/16 PLAIN ANGLE DIE # K-5401
6 11/16
19 5/16
STA. #333
STA. #366
SECTION B-B 6" = 1 FT.
SECTION A-A 6" = 1 FT.
7°
-0 28-5AMK 28B1024 1
-0 28-5MC 28B1024 1
-0 28-5AMC 28B1024 1
-0 28-5MN 28B1024 1 SUB ASSY -11
-0 28-5MC 28B1024 1
-0 28-5AN 28B1024 1
-0 PBY-5A 28B1024 1
-0 PBY-5 28B1024 1
REQUIREMENT PER AIRPLANE
MAT.
REPLACES
REPLACED BY
ALL AL. ALLOY SHEET SPEC. 4710 (COND. T) ALLOY 24T EXCEPT AS NOTED
ALL AL. ALLOY EXTRUSIONS SPEC. 4680 (COND. T)
HEAT TREAT ALL COND. A MATERIAL PER SPEC. 3R53 COND. T
RIVETS AL. ALLOY, EXCEPT AS NOTED.
FILE
PRINTED
COPY No. L

SUPPLIES & EQUIPMENT CLASSIFICATION			
LET	ALTERATION	DATE	BY
M	TRACED	4-29-37	V.I.D.
N	ADDED NOTE	7-26-37	J.D.W.
P	INCREASED DEPTH OF NOTCHES FROM 1/8 TO FLAT SURFACE OF CASTING. WT. CHG. NEG.	5-14-42	MACH. DEPT. ASSY.

E.O.A40254

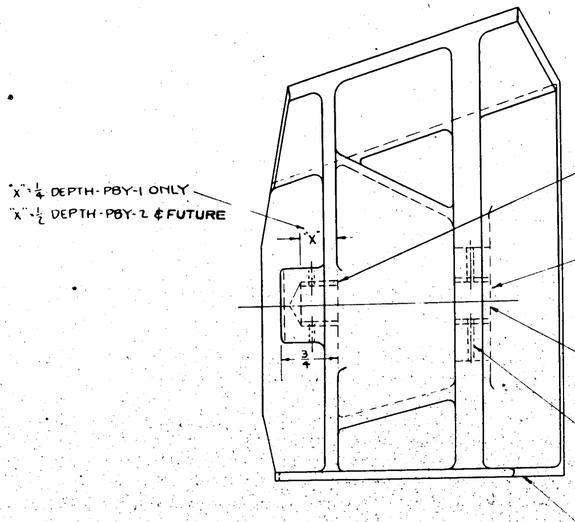
"X" = 1/4 DEPTH - PBY-1 ONLY
"X" = 1/2 DEPTH - PBY-2 & FUTURE
Q620-16-8 BUSHING PBY-1 ONLY
Q620-16-16 BUSHING PBY-2 & FUTURE
Q620-16-12 BUSHING PBY-1 ONLY
Q620-16-16 BUSHING PBY-2 & FUTURE
39/64 LINE DRILL THRU LUG AND INTO BOSS TO DEPTH SHOWN .624-.625 LINE REAM
3/32 DIA DRILL THRU
(-2) AL ALLOY CASTING (220T4) SPEC M-186 HT NAF 548
(-3) R.H.
3/4
X

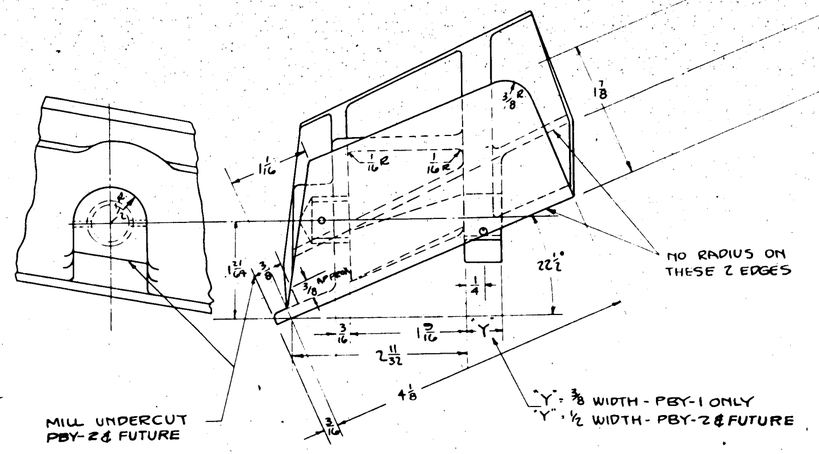

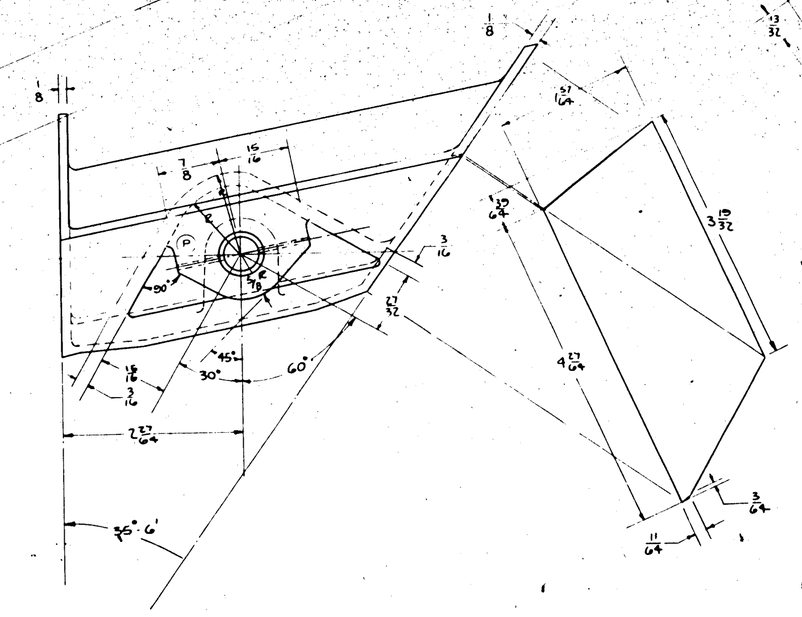

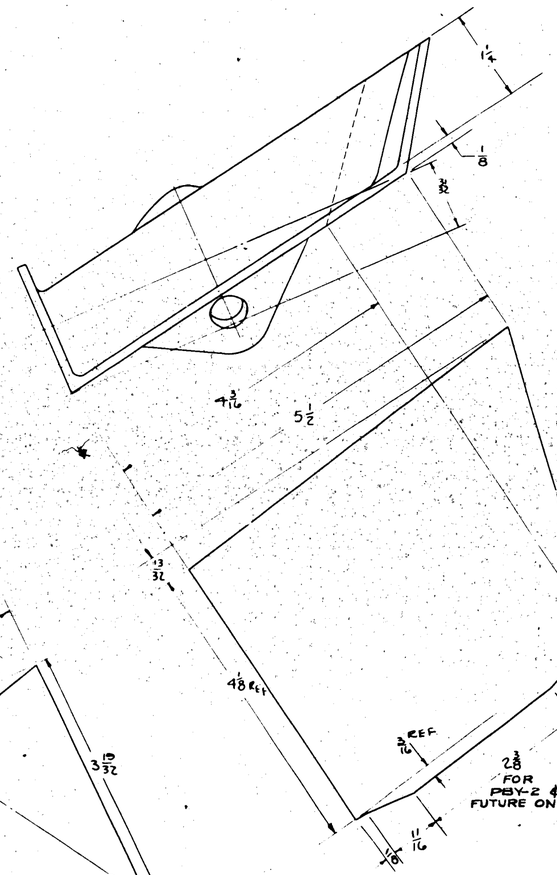

(N) NOTE: PBY-2,3 & 4 TYPE FITTINGS CAN BE USED ON PBY-1 AIRPLANE PROVIDING PIN 28B2576 IS INSTALLED IN FITTING

FINISH: Gr
Z-P-~~Amy~~ ON XPBY-1 & PBY-1
Z-P-~~AP~~ ON PBY-2 & FUTURE
Gr

NOTE: USE 1/8 FILLET RAD EXCEPT AS OTHERWISE SPECIFIED. ROUND OFF ALL EDGES 1/16 RAD. EXCEPT WHERE OTHERWISE SPECIFIED.

-R	28-5AMM	28B1578	1	
-L	28-5AMM	28B1578	1	
-R	PBY-5B	28B1578	1	
-L	PBY-5B	28B1578	1	
-R	28-5AMC	28B1578	1	
-L	28-5AMC	28B1578	1	
-R	PBY-5A	28B1578	1	
-L	PBY-5A	28B1578	1	
-R	28-5ME	28B1578	1	
-L	28-5ME	28B1578	1	
-R	28-5MN	28B1578	1	
-L	28-5MN	28B1578	1	
-R	28-5MA	28B1578	1	
-L	28-5MA	28B1578	1	
-R	28-5MC	28B1578	1	
-L	28-5MC	28B1578	1	
-R	PBY-5	28B1578	1	
-L	PBY-5	28B1578	1	
-R	PBY-4	28B1578	1	
-L	PBY-4	28B1578	1	
-R	PBY-3	28B1578	1	
-L	PBY-3	28B1578	1	Q620-16-16
-R	PBY-2	28B1578	1	Q620-16-8
-L	PBY-2	28B1578	1	Q620-16-12
-R	PBY-1	28B1578	1	
-L	PBY-1	28B1578	1	
-R	XPBY-1	28B1578	1	-3
-L	XPBY-1	28B1578	1	28B1577-2

FINISH CODE	
Z	ZINC CHROMATE
P	P-7 PRIMER
AP	ALUMINIZED PRIMER
C	CADMIUM PLATE

OPH	PBY	PBY-2 & FUTURE															
PARTS																	
1-18 LIST PER ASSY.																	
2	2																

REPLACES
REPLACED BY
LIMIT ON DIMENSIONS UNLESS OTHERWISE SPECIFIED ± 1/64

APPROVED 4-29-37 DATE
CALC WT 1.12 ALT WT
SCALE 12" = 1'-0"
AC
NAVY NOTED MATERIAL

O.H.	MODEL	NEXT ASSY	REQ.
REQUIREMENTS PER AIRPLANE			
NOTED SPEC.	NOTED HEAT TREAT	NOTED FINISH	MAT.

2/20/40 Changed to GREEN
T.M.H. 5-27-37
DRAFT | CHECK | EXAM | ENG.

CONSOLIDATED AIRCRAFT CORP. BUFFALO, N.Y.
STAMP PT. No. WHERE SHOWN

NAME SOCKET-HULL-BEACHING GEAR TAIL WHEEL ATTACHMENT

OPP HAND 28B1577-1

DWG SIZE G 28B1577

SUPPLIES & EQUIPMENT CLASSIFICATION			
LET	ALTERATION	DATE	BY
N	TRACED	8-1-37	C.L.Mann
O	RELOCATED 3/32 HOLE. RE- MOVED 15¼ DIM. ADDED 5° DIM.	9-9-37	[illegible]
P	REMOVED PBY-3 REQUIREMENTS	8-10-37	Atkins

(3) SPLICE PLATE .051 AL. ALLOY SHT. SPEC. 4TA10 COND T (ALLOY 24S7)

SYMM. ABOUT ℄ OF SHIP

BUTT JOINT-2

(-2)

LOCATE HOLES HALF WAY BETWEEN RIVETS 2 HOLES ON EACH SIDE OF ℄ FOR'D AND AFT.

11 25/64

37.375 DIA ±.005

℄ OF SPLICE OF TRACK OTHER SIDE SYMMETRICAL

A

A

DRILL 3/32

3 REQD.

FORWARD

(-2) ½ x ½ x 1/16 ANGLE K-5401 SPEC 4TA10 COND. T MAKE TIGHT BUTT JOINT AT REAR ON ℄ OF SHIP

NO PAINT

288 1635 SPACE 2

.785 .790

37.375 DIA. (REF) ±.005

3/16 REF.

DRILL 3/16 -B- HOLES 4 IN FOR'D. SIDE ℄ 4 IN AFT SIDE OF TRACK

WS 288 1609

37. DIA. REF.

℄ SYM OF SECTION

AN442D5

288 1398

1.184 1.194 (REF)

NO PAINT

.785 .790

288 1635

NO PAINT

(4)

SECTION A-A
SCALE 12"=1'-0"

MACHINE TO DIMENSIONS SHOWN AFTER RIVETING

Q4305-04 RIVETS

.030 SKIN (REF.)

W.S. JOINT

SECTION B-B
SCALE-12"=1'-0"

½ DUPRENE (TOP ONLY) ½ WIDE X 136" LONG APPROX.

(-4)

℄ GUN TRACK

LOCATE RIVETS FROM HOLES IN SEGMENTS

OMIT THIS RIVET UNTIL ASSY. 288 1124 (BOTH SIDES)

288 1609

288 1634-2

288 1398

288 1634-3 L.H.
288 1634-4 R.H.

SPACE RIVETS BETWEEN HOLES IN SEGMENTS

288 1634-5 L.H.
288 1634-6 R.H.

288 1633 L.H.
288 1633-1 R.H.

ASSY ORDER:-

1- ASSEMBLE THE FOLLOWING PARTS:
2- MACHINE TO GIVEN DIMENSIONS
3- FINISH THE ASSEMBLY [illegible] AS PER SPEC XP3H (PBY-1); 2-P-2 OR PBY-2
FUTURE: OMIT PAINT WHERE NOTED
4. ADD 288 1609 TO ASSEMBLY

288 1633	288 1634-2
288 1633-1	288 1634-3
288 1635-2	288 1634-4
288 1398	288 1634-5
	288 1634-6

THIS ASSEMBLY TO FIT WITH 288 1307 (WINDSHIELD)

-3	PBY-5A&B	288 3034	VEA	288 1633
-2	PBY-5A&B	288 3034	VEA	288 1633

				288 1635
				288 1634-6
				288 1634-5
				288 1634-4
				288 1634-3
				288 1634-2
				288 1633-1
				288 1633
				288 1398
				288 1609-1
-3	PBY-4	288 3034		288 1609
-2	PBY-4	288 3034		288 1636-1
-1	PBY-5 2A	288 3034		288 1636-3
-2	PBY-5 2A	288 3034		288 1636-2
	PBY-3 P1	288 1124		
	PBY-2	288 1124		
	PBY-1	288 1124		Q4805-04 4 4 4
	XP3Y-1	288 1124		AN442-D5

FINISH CODE	
Z	ANODIC [illegible]
P	PAINT
AP	ALUMINUM [illegible]
C	CHROMIC PLATE

REPLACES							
REPLACED BY							
LIMIT OR DIMENSIONS UNLESS OTHERWISE SPECIFIED ± .015							
APPROVED 5-1-37 DATE							
CALC. ACT. WT.							
SCALE 6"=1'-0"	O.H.	MODEL	NEXT ASSY	REQ.	ST'D PARTS	PARTS LIST PER ASSY.	
AC	REQUIREMENTS PER AIRPLANE			MAT.		LOC	GAUGE
NAVY NOTED	NOTED		NOTED		3286	5847	
MATERIAL	SPEC.	HEAT TREAT	FINISH		DRAFT	CHECK	EXAM	ENG

CONSOLIDATED AIRCRAFT CORP. BUFFALO, N.Y.

STAMP PT. No. WHERE SHOWN

NAME: TRACK ASSEMBLY- HULL- BOW GUN

OPP. HAND

DWG. G SPEC. 288 1638

BULLIVANT-HOLBROOK CO. INC. BUFFALO
IMPERIAL TRACING CLOTH

BUREAU CHANGE INCORPORATED
CHANGE #53 PBY-1 ALL

LET	ALTERATION	DATE	BY
A	TRACED	4-29-37	R.T.R.
B	PBY-2 & PBY-3 REQ'MTS REVISED	6-23-37	RTQ
C	ADDED -2, & 28B1931 (CO 5868)	1-18-38	[illegible]
D	ADDED DETAIL OF ASSY PBY-2 & FUTURE, AC745-1B, & -3		
E	ADDED -4	1-18-38	[illegible]
F	28B1884-2 WAS 28B1884 ON PBY-1; 28B1876-4 WAS 28B1876 ON PBY-1	3-8-38	[illegible]
G	ADDED TO B.M. ONLY :- Q908-A4-B (2) & Q506-A2-3 (2). (C.O. 7097)	3-29-38	M'D[illegible]
H	-4L & -4R (1 EA. REQ.) WAS -4 (2REQ.). (C.O. 7517)	6-23-38	[illegible]
J	-3 MAT "SYN. RUBBER TUBING TYPE III, GR.A" WAS "GUM RUBBER TUBING, COMM." (NEG.WT.CHG.)	8-29-42	[illegible]

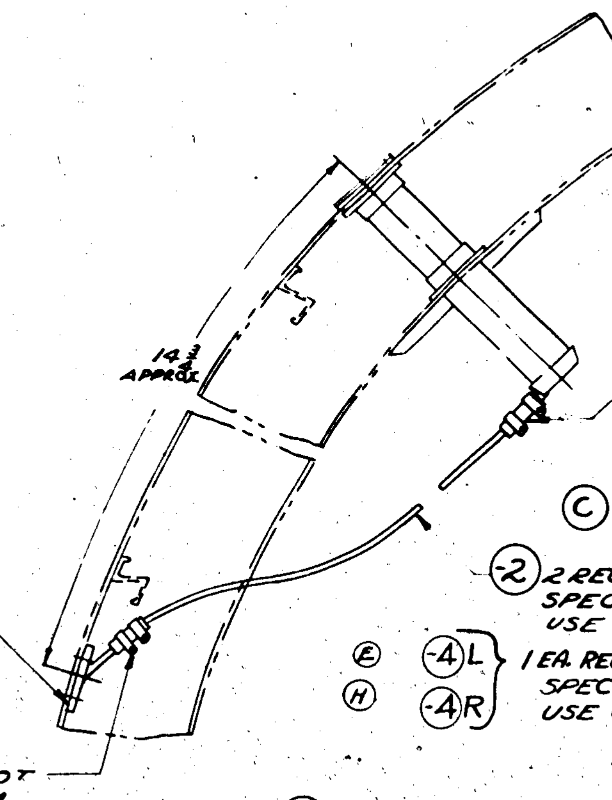

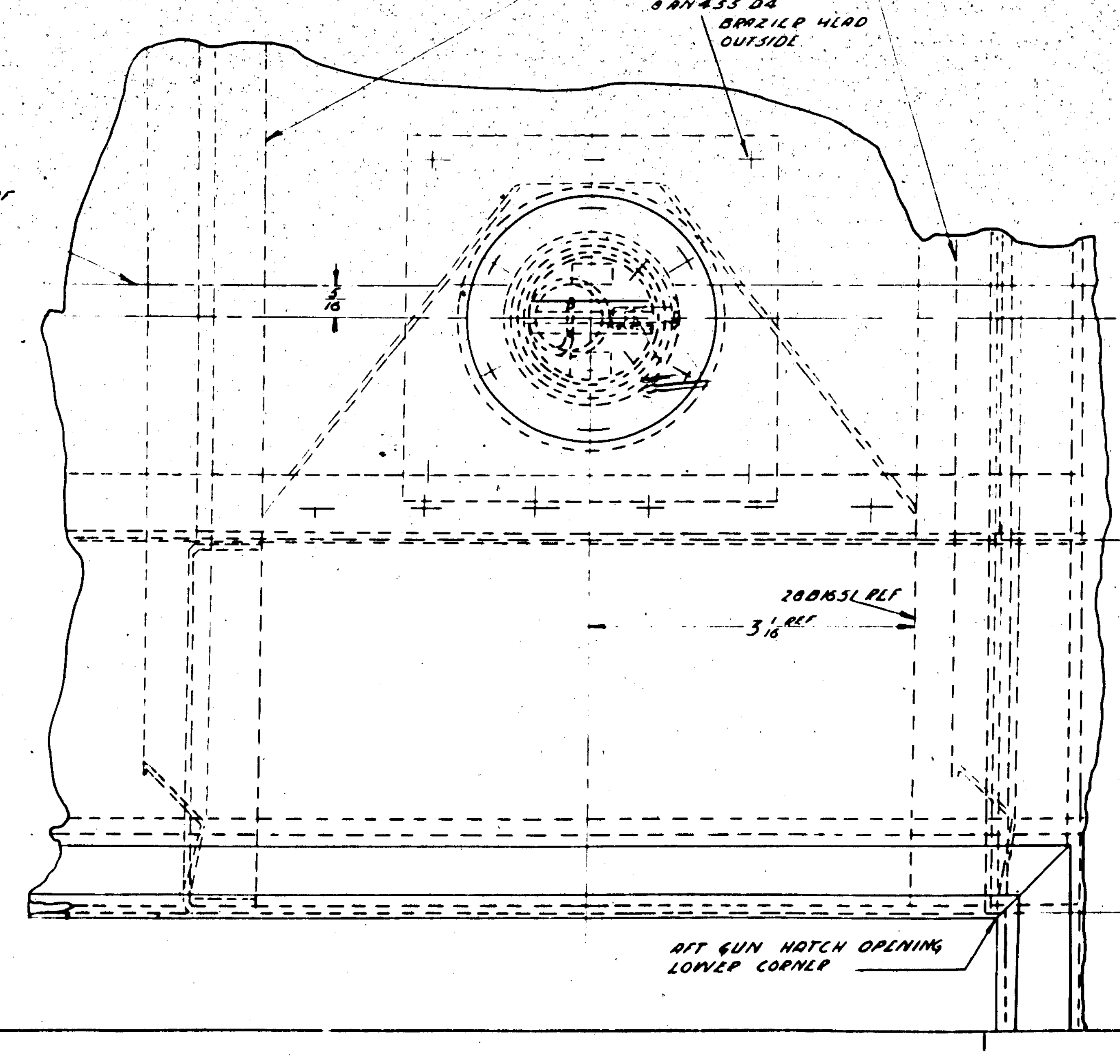

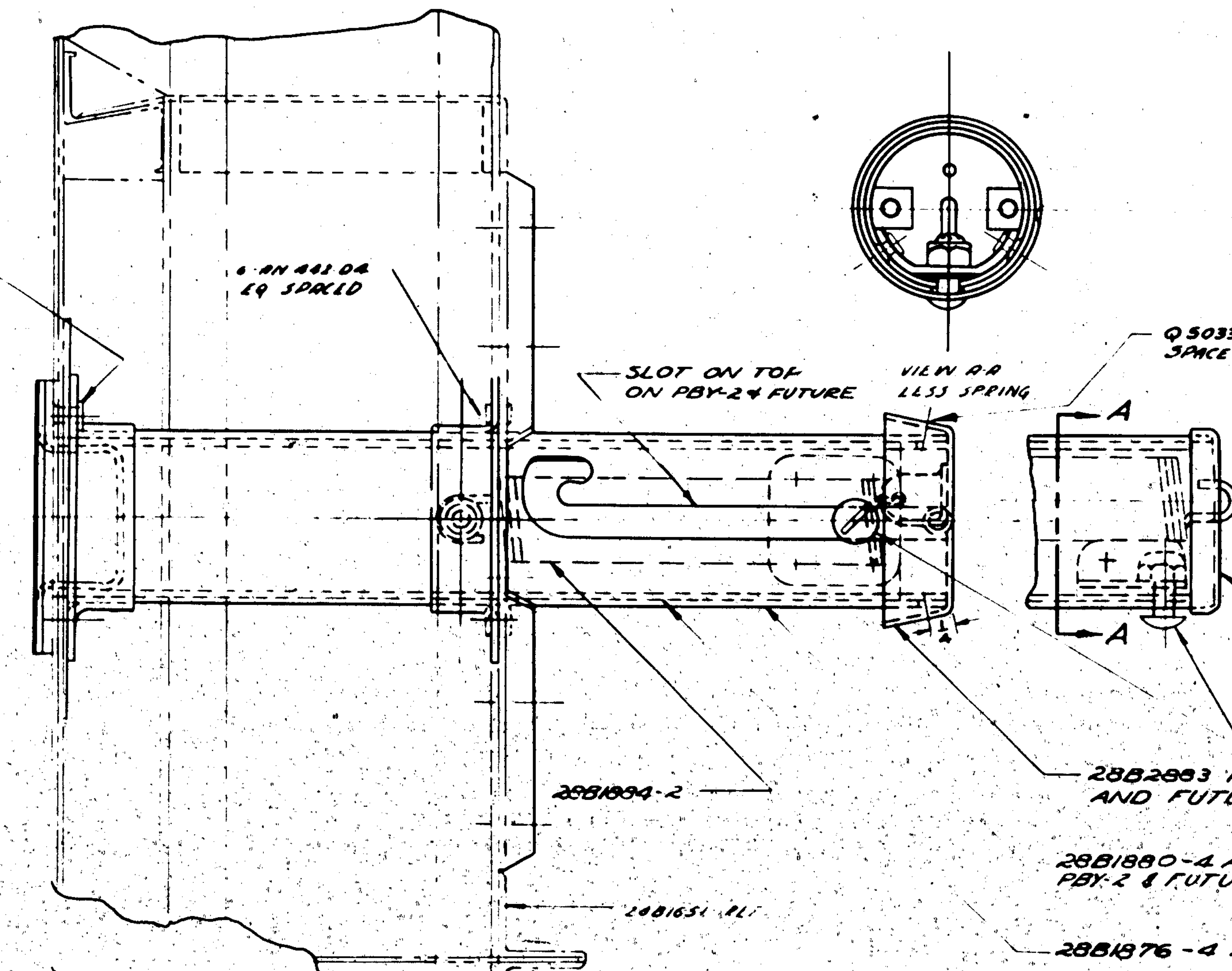

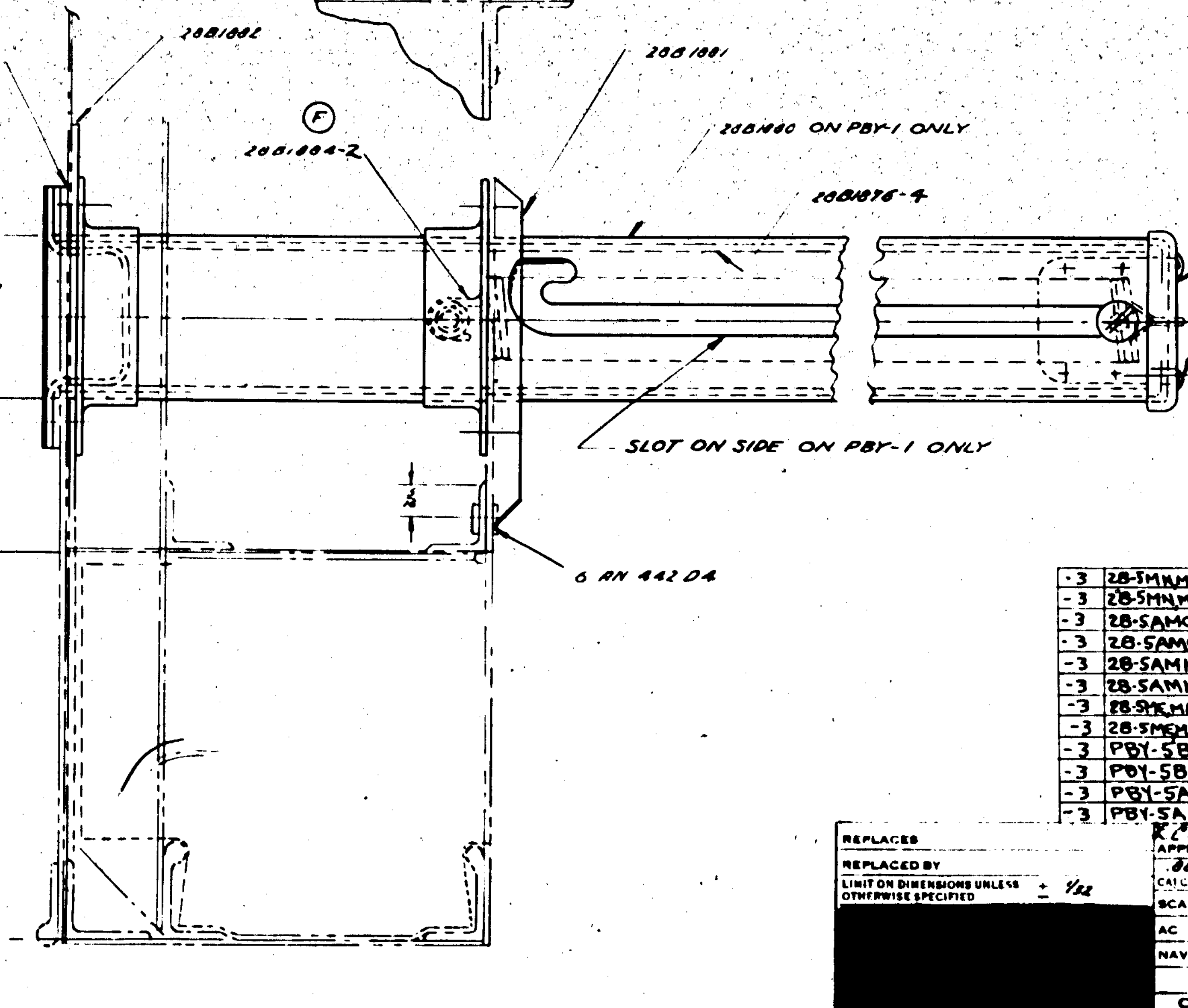

FINISH:-
Z-P-[illegible] ON PBY-1
Z-P-[illegible] ON PBY-2 & FUTURE

FINISH CODE	
Z	ANODIC TREATMENT
P	P-27 PRIMER
AP	ALUMINIZED PRIMER
C	CADMIUM PLATE

-3	28-5MNMC	28B4150	2EA.
-3	28-5MNMC	28B4152	2EA.
-3	28-5AMC	28B4150	2
-3	28-5AMC	28B4152	2
-3	28-5AMN	28B4150	2
-3	28-5AMN	28B4152	2
-3	28-5MEMA	28B4150	2EA.
-3	28-5MEMA	28B4152	2EA.
-3	PBY-5B	28B4150	2
-3	PBY-5B	28B4152	2
-3	PBY-5A	28B4150	2
-3	PBY-5A	28B4152	2

O.H.	MODEL	NEXT ASSY	REQ.
-3	PBY-5	28B4152	
-3	PBY-5	28B4150	
-1	PBY-4	28B1000	
	PBY-4	28B1000	
-1	PBY-3	28B1000	1
	PBY-3	28B1000	1
-1	PBY-2	28B1000	1
	PBY-2	28B1000	1
-1	PBY-1	28B1000	1
	PBY-1	28B1000	1

REQUIREMENTS PER AIRPLANE

(G)

STD PARTS / MAT.								
Q5033A-4-6			2	2	2	2	2	2
Q908-A4-B					1	1	1	1
Q506A-2-3					1	1	1	1
28B2883-1				1		1		1
28B1931			1	1	1	1		
28B1931-5								
28B1885	1	1	1	1	1	1	1	1
28B2883			1		1		1	
28B1876-4	1	1	1	1	1	1	1	1
28B1884-2	1	1	1	1	1	1	1	1
28B1880-4			1	1	1	1	1	1
AC745-1B			4	4	4	4	2	2
AN530-6-6	2	2						
AC525-10-9	1	1	1	1	1	1	1	1
AN442D4								
AN455D4								
AC425D4								
28B1875-4R								1
28B1880	1	1						
28B1881	1	1	1	1	1	1	1	1
28B1882	1	1	1	1	1	1	1	1
28B1883	1	1						
28B1875-4L							1	
28B1876-3			2	2	2	2	1	1
28B1875-2			1	1	1	1		

PARTS LIST PER ASSY.

REPLACES				
REPLACED BY				
LIMIT ON DIMENSIONS UNLESS OTHERWISE SPECIFIED ± 1/32				
[redacted]				
APPROVED R.[illegible] 4-29-37	DATE			
CALC.WT. .88	ACT WT.			
SCALE 12" = 1'0"				
AC				
NAVY SEE DETAILS	NONE	NONE	NOTED	
MATERIAL	SPEC.	HEAT TREAT	FINISH	
CONSOLIDATED AIRCRAFT CORP. BUFFALO N.Y.	NAME: INSTALL HULL AFT GUN HATCH SNUBBING POST			
STAMP PT. No. WHERE SHOWN				

DRAFT	CHECK	EXAM.	ENG.
6-2-35 [illegible]	[illegible] 6-24-37		

OPP HAND 28B1875-1

DWG. SIZE G 28B1875

SULLIVAN-McKEEGAN CO. INC. BUFFALO
IMPERIAL TRACING CLOTH

INCORPORATES
PBY-1 BU. AER. CHG. #131
PBY-2 " " " #91
C.O. 5202
C.O. 7595 B

LET	ALTERATION	DATE	BY
K	TRACED UP TO DATE	6-30-37	V.T.B.
L	-32 WAS R.H. FRONT, -26 WAS 2 REQ'D. -30 & -31 WERE 2 REQ'D.		
M	ADDED -33 FOR PBY-4	1-18-38	ABOVE
N	ADDED 11/16 DIA. HOLE AS SHOWN & CHANGED PART NO. FROM -15 TO -34, IN B/M - CHANGED -15 FROM 2 TO 1 REQ. & ADDED -34, 1 REQ.	10-3-38	[illegible]
P	REPLACED NOTE "AL. ALLOY EXTR. (2SO) SPEC. 46A9 COND. T (5/8 x 3/4 x 1/16) PLAIN ANGLE DIE # K5401 (-26, -27, -28, -29, -30, -31) WITH "MAT'L FOR -26 --- Y-2-A28T" BROY REQ/PLANE TO DATE (WT. CHG. NEG.)	4-9-43	KNIGHT
Q	TO MAT'L NOTE FOR -24, -27, -28, -29, -30, & -31 ADDED ALT. MAT. "K5401, AL. AL. EXTR., SPEC. QQ-A-354-T." NO WT. CHG.	10-16-43	[illegible]

SECTION A-A
SCALE 12" = 1'-0"

SECTION B-B
SCALE 12" = 1'-0"

VIEW LOOKING FORWARD
PORT SIDE SHOWN

VIEWS AT KEEL
SCALE 12" = 1'-0"

SECTION E-E

SECTION C-C
SCALE 6" = 1 FT

SECTION D-D
SCALE 6" = 1'-0"

LIST OF DASH NO'S AND MATERIAL FROM WHICH THEY ARE MADE

030 AL ALLOY (24ST) SPEC 47A10 COND T (-2) -33

030 AL ALLOY (24SO) SPEC. 47A10 COND A H.T. SR53 (COND. T) (-7, -8, -9, & -10)

030 AL ALLOY (24SO) SPEC. 47A10 - COND A H.T. SR53 (COND. T) (1 7/8 x 3/4 x .030) DRAWN ANGLE DWG M935 (-11, -12, -13, & -14)

064 AL ALLOY (24ST) SPEC 47A10 - COND T (-3)

AL ALLOY EXTRUSION (24ST) SPEC 46A9 COND T (1 x 3/4 x .070) PLAIN ANGLE DIE # K1288 (-20, -21, -22, -23, -24 & -25)

AL ALLOY EXTRUSION (24SO) SPEC. 46A9 COND A HT SR53 (COND T) (1 x 3/4 x .070) PLAIN ANGLE DIE # K1288 (-16, -17, -18, -19) & (-12)

MATERIAL FOR -26, -27, -28, -29, -30 & -31 MAY BE
A. Y-2 A28T OR
B. K5401, AL. AL. EXTR., SPEC. QQ-A-354-T.

ALL RIVETS AN442-D6
(1/8 x 3/4 x .030) ANGLE. MAKE FROM .030 AL ALLOY SHEET (24SO) SPEC. 47A10 COND A HT SR53 (COND T) (-4, -5, -6, & -15 & -34)

AN442-D6					
QQ20-D6-3	2	2	2	2	
QQ20-D6-2	2	2	2	2	
-34	1	1	1	1	
2881900-33				2	
2881725-5	1	1	1	1	
2881551-1	1	1	1	1	
2881551	1	1	1	1	
-32	2	2	2	2	
-31	1	1	1	1	
-30	1	1	1	1	
-29	1	1	1	1	
-28	1	1	1	1	
-27	1	1	1	1	
-26	4	4	4	4	
-25	1	1	1	1	
-24	1	1	1	1	
-23	1	1	1	1	
-22	1	1	1	1	
-21	1	1	1	1	
-20	1	1	1	1	
-17	1	1	1	1	
-16	1	1	1	1	
-15	1	1	1	1	
-14	1	1	1	1	
-13	1	1	1	1	
-12	1	1	1	1	
-11	1	1	1	1	
-10	1	1	1	1	
-9	1	1	1	1	
-8	1	1	1	1	
-7	1	1	1	1	
-6	2	2	2	2	
-5	1	1	1	1	
-4	1	1	1	1	
-3	1	1	1	1	
-2	1	1	1	1	
-1	1	1	1	1	

O.H.	MODEL	NEXT ASSY.	REQ	L.H. PBY-1	R.H. PBY-1	L.H. PBY-2	R.H. PBY-2	L.H. PBY-4	R.H. PBY-4
28-5AMN	28B5500		1						
28-5AMC	28B5500		1						
28-5MN	28B1000		1						
28-5MC	28B1000		1						
28-5ME	28B1000		1						
28-5MA	28B1000		1						
PBY-5	28B6000		1						
PBY-5	28B1000		1						
PBY-5A	28B5500		1						
PBY-5B	28B6000		1						
PBY-4	28B1000								
PBY-3	28B1000								
PBY-2	28B1000								
PBY-1	28B1000								

REQUIREMENTS PER AIRPLANE | MAT. | PARTS LIST PER ASSY.

SPEC	HT TREAT	FINISH	MATERIAL
NOTED	NOTED	NOTED	

REPLACES 28B900 OF 1-24-38
REPLACED BY
LIMIT ON DIMENSIONS UNLESS OTHERWISE SPECIFIED ± 1/64

APPROVED 4-30-37 DATE
CALC. WT. A/T W.
SCALE 6" & 12" = 1'-0"
AC
NAVY NOTED

CONSOLIDATED AIRCRAFT CORP. BUFFALO N.Y.
STAMP PT. No. WHERE SHOWN

NAME BULKHEAD-HULL-STA. # 9

80.1 Standard WAYS
1-2-36 5-7-37
DRAFT | CHECK | STRESS | ENG

OPP. HAND
DWG. NO. G 28B1900
SIZE

FINISH CODE
GP - GREEN PRIME
Z - ANODIC TREATM. #1
P-37 PRIMER
ALUMINIZED PRIMER
CADMIUM PLATE

FINISH:
Z-P-26P ON PBY-1 C-9187G
Z-P-26P ON PBY-2 & FUTURE

DIAGRAM-MORRISON CO., INC. BUFFALO
TECHNICAL TRACING CLOTH

00618B7

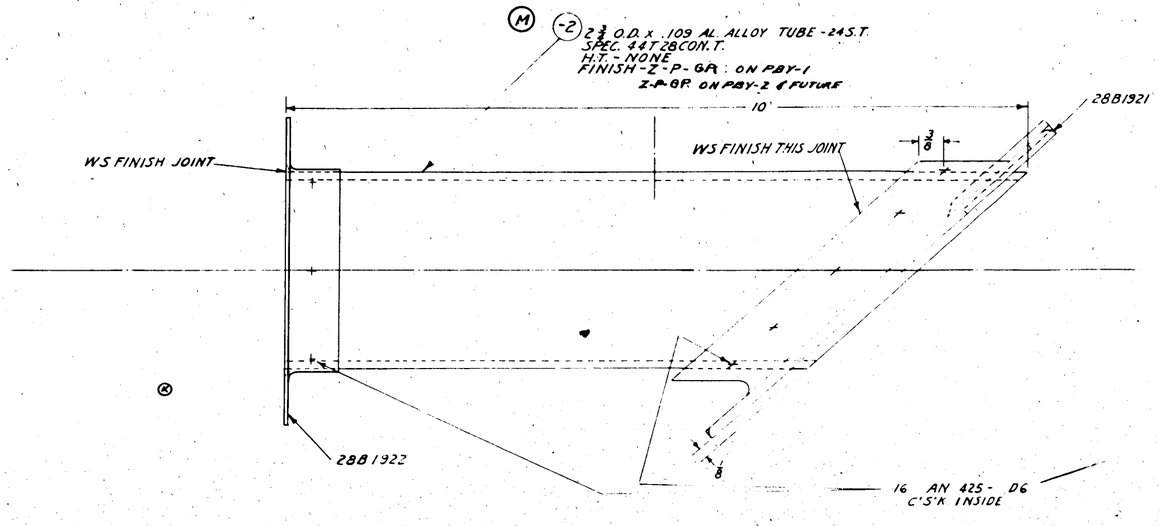

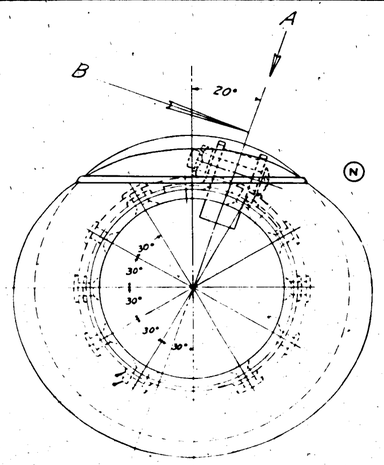

C.O. 5087
E.O. 27193

SUPPLIES & EQUIPMENT CLASSIFICATION			
LET	ALTERATION	DATE	BY
J	TRACED UP TO DATE	6/26/41	WNA
K	REMOVED -3	10-10-42	[illegible]
L	AN24-18 - WAS AN24-16	10-29-42	[illegible]
M	CHGD. MAT. NOTE - 2 TO 24ST. SPEC. 44T28 (WAS 17ST. SPEC. 44T21) (AUTH. C.O. NO. 8-30-43 [illegible]
	CHGD. FINISH TO GP (WAS AND F AL)		
N	MOVED FLANGE ON 28B1921 PERPENDICULAR TO 28B1919-2 NO WT. CHG	7-9-43	[illegible]

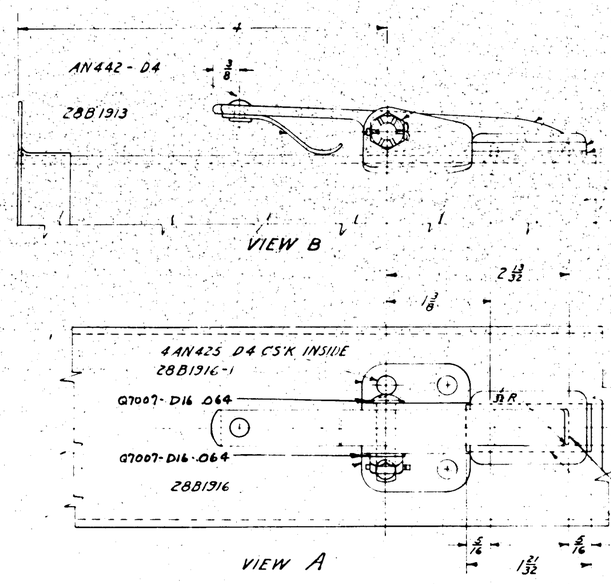

AN24-18 (L)
AN320-4
AN380-2-2

28B1918

28B1936
28B1923

CEMENT TO 28B1918 WITH VULCALOCK

FINISH CODE	
Z	ANODIC TREATMENT
P	P-23 PRIMER
AP	ALUMINIZED PRIMER
C	CADMIUM PLATE

ALL TO S/N	28B1920	1 EA	28B1923	1	1	1
PBY-5A&B	28B1920	1 EA	28B1922	1	1	1
PBY-5	28B1920	1	28B1921	1	1	1
PBY-4	28B1920		28B1918	1	1	1
PBY-3	28B1920		28B1916-1	1	1	1
PBY-2	28B1920		28B1916	1	1	1
PBY-1	28B1920		28B1913	1	1	1
				O.H.	PBY1	PBY2	PBY3

PARTS LIST PER ASSY.			
MAT.	NEXT ASSY.	REQ.	BY D PARTS
NOTED	NONE		

REQUIREMENTS PER AIRPLANE			
MATERIAL	SPEC.	HEAT TREAT	FINISH
NOTED	NOTED	NONE	NOTED

Q7007-D16-064
AN320-4
AN380-2-2
AN24-18
AN442-D4
AN425-D4
AN425-D6
28B1996
28B1919-2
28B1923
28B1922
28B1921
28B1918
28B1916-1
28B1916
28B1913

REPLACES
REPLACED BY
LIMIT ON DIMENSIONS UNLESS OTHERWISE SPECIFIED ± 1/32

[redacted]

X'ED 4-30-37
APPROVED DATE
CALC BY KS
CALC. 12"=1'-0"
AC
NAVY

CONSOLIDATED AIRCRAFT CORP. BUFFALO, N.Y.
STAMP PT. No. WHERE SHOWN

NAME SOCKET - HULL - BOW SNUBBING POST

DRAFT [illegible] CHECK [illegible] EXAM [illegible] ENG. [illegible]

OPP HAND

DWG. G 28B1919
SIZE

28B1919

DOLLIN-MACGREGOR LTD. 197 BUFFALO SPECIAL TOOLING CLOTH

SUPPLIES & EQUIPMENT CLASSIFICATION			
LET	ALTERATION	DATE	BY
C	TRACED	9-16-38	CCB
D	2 1/4 JOGGLE WAS 1 1/4	11-3-38	C.C.B.
E	CHANGED -4 & -5 FROM DWG # M924 TO DWG # M931	1-18-51	F.B.T.
F	CHANGED 2 1/4 JOG - 1 1/4 OLE TO 1 1/4.	1-22-51	Buck
G	24 S.O.S. SPEC. FOR -4 & -5 WAS 24 ST.	10-11-40	C. Miller

ED. 17209

VIEW LOOKING FORWARD
PORT SIDE SHOWN

TRIM OFF BULB FLUSH WITH 7/8 LEG OF -2 & -3 TO CLEAR 2881567

.064 GAP BETWEEN END OF -2 & -3 FOR INSERTION OF 2881567-4 GUSSET

THIS DIM AS SMALL AS POSSIBLE

2881567

AN442-D5 ALL RIVETS

AN442-D5 1 1/8" SPACING

22 1/2" (REF)

44°20'

88°40'

JOGGLE MAY BE 45°

(-2) L.H
(-3) R.H

(-4) L.H
(-5) R.H

(-6) L.H
(-7) R.H

(-8) L.H
(-9) R.H

CUT OFF CORNER OF -6 & -7 TO CLEAR 2881567-2

SECTION	ANGLE
A-A	2 1/2°
B-B	3 1/2°
C-C	4°
D-D	6 1/2°
E-E	10°

LIST OF DASH NO'S & MATERIAL FROM WHICH THEY ARE MADE

[AL. ALLOY EXTRUSION (24S0) SPEC. 46A9 COND. A
H.T. SR 53 (COND'T) - 7/8 x 3/16 X .060 BULB ANGLE
- DIE # K-1559 -2 & -3

[AL. ALLOY SHEET (2430) SPEC 47A10 (G)
COND. A - H.T. - SR 53 (COND. T)
/ 35/32 x 15/32 x .040 DRAWN ANGLE - DWG # M931
- 4 & -5

[.030 AL. ALLOY SH'T (2450) SPEC 47A10
COND. A - H.T. - SR 53 (COND. T)
SAME DIMENSIONS AS M 924 (1 3/16 x 1/2 x .030)
- 6, - 7, - 8, & - 9

FINISH: -
Z-P-2 ~~AMY~~ ON PBY-1
Z-P-2 ~~AK~~ ON PBY-2 & FUTURE

FOR'D

TYPICAL SECTION AT A-A, & - B-B
SCALE 12" = 1'0"

FOR'D

TYPICAL SECTION AT C-C, D-D, & E-E
SCALE 12" = 1'0"

SECTION F-F
SCALE 12" = 1'0"

2881567-3 (REF)
2881567-2 (REF)
FORWARD
AN442-D5 RIVETS SPACED APPROX. AS SHOWN
2881960 SHOWN 2881960-1 ST'B'D 1 EA. REQ'D
2881961 SHOWN 2881961-1 STARBOARD 1 EA. REQ'D
-2 (REF)

SECTION G-G
SCALE 12" = 1'0"

FINISH CODE	
Z	ANODIC TREATMENT
P	P-27 PRIMER
AP	ALUMINIZED PRIMER
C	CADMIUM PLATE

PBY-5A	2881500	1	AN442-D5
PBY-3B	2881600	1	2881961-1
PBY-5	2881000		2881961
PBY-4	2881100		2881960-1
PBY-3	2881000		2881960
PBY-2	2881000		2881567
PBY-1	2881000		-9
			-8
			-7
			-6
			-5
			-4
			-3
			2881950-2

REPLACES 2881950 of 6-5-34	APPROVED PCW	DATE 10-11-40						
REPLACED BY	CALC. WT. 263	ACT. WT.	O.H.	MODEL	NEXT ASSY	Req.	PART NO	
LIMIT OR DIMENSIONS UNLESS OTHERWISE SPECIFIED ± 1/32	SCALE 1/2" = 1'0"		REQUIREMENTS PER AIRPLANE			MAT.		
	AC						80.1	
	NAVY NOTED		NOTED		NOTED	NOTED	1-4-35	
	MATERIAL		SPEC.		HEAT TREAT	FINISH	DRAFT	CHECK
CONSOLIDATED AIRCRAFT CORP. BUFFALO, N.Y.	NAME						OPP HAND	
STAMP PT. No. WHERE SHOWN	BELTFRAME - HULL - STA # 9.5						DWG G	2881950

Duplicator-Blueprint Co. Inc. Buffalo
Industrial Tracing Cloth

LTR	ALTERATION	DATE	BY
	SUPPLIES & EQUIPMENT CLASSIFICATION		
D	TRACED	4-29-37	V.I.B
E	REMOVED H.T NOTE; COND A TO COND T ON -6 & -7	10-30-40	S MILLER
F	ADDED 68-A17-02 (2) & AC366-DF1032 (15) WAS (17). ON FACE: DIM. CHGS. AS FOLLOWS - 2 3/8 WAS 2 5/16, 8 3/4 WAS 8 3/16, 28 15/16 WAS 28 7/16, 13 1/4 WAS 13 3/8, 3 5/16 WAS 3, 2 7/8 WAS 3, 2 7/8 WAS 2 9/16, 2 7/8 WAS 2 11/16 & 2 7/8 WAS 2 13/16. ADDED 9 5/32, 2 3/4, 2 1/2, 2 3/8, 4 1/8, 5°, 2 3/8, 21/32 & 2 7/8 DIMS. REMOVED 7/16, 9 3/16, 8, 9/16, 11/16 & 2 5/16 R.	11-1-41	BURRHOLDER
G	DIMS. 28 17/32 WAS 28 9/16; 5 9/16 WAS 6 1/32; 9 3/32 WAS 9 1/32 (NT. CHG NEC.)	6-2-42	SEYMOUR

E.O. 16251

E.O. A40247

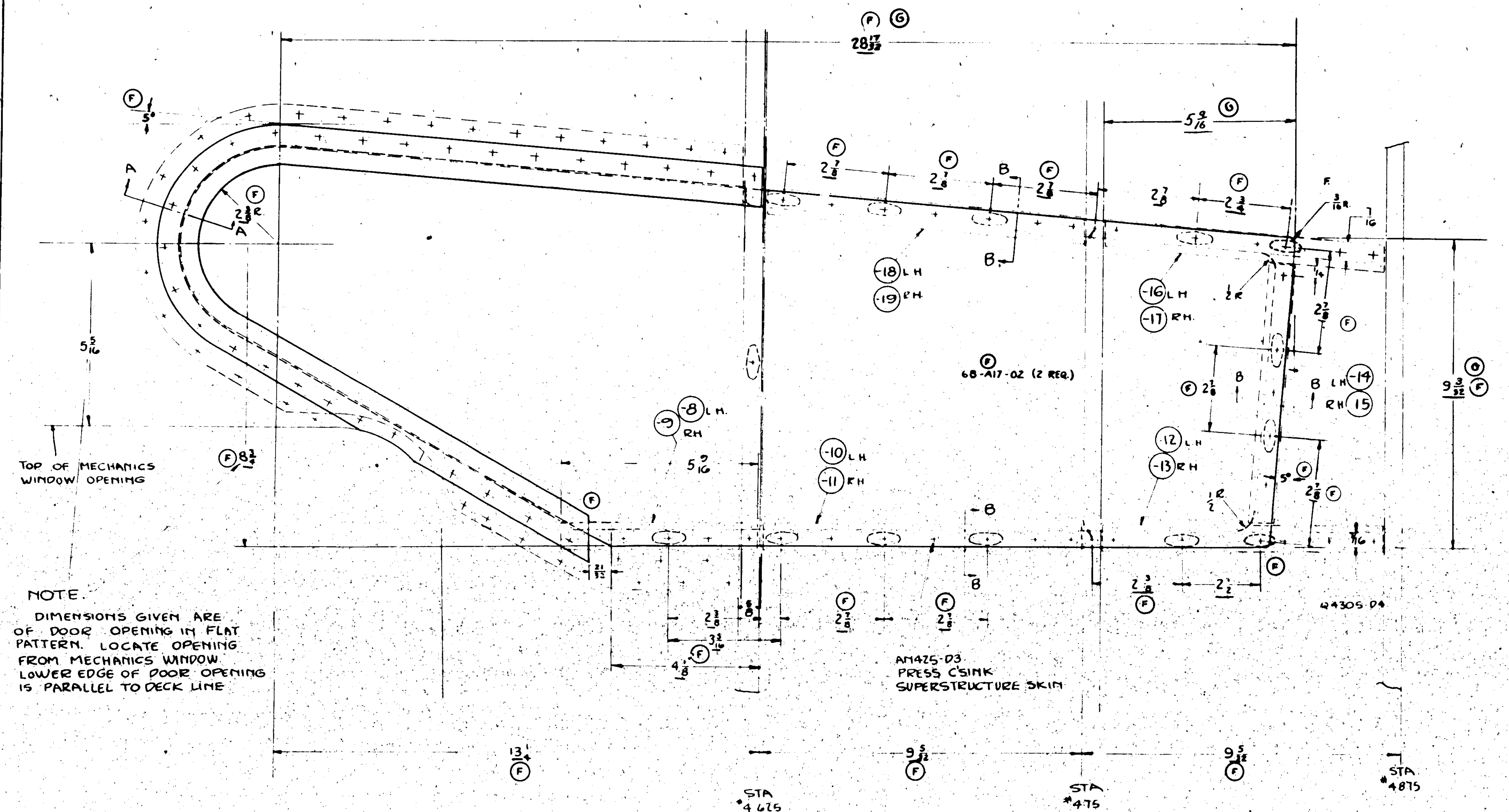

NOTE.
DIMENSIONS GIVEN ARE OF DOOR OPENING IN FLAT PATTERN. LOCATE OPENING FROM MECHANICS WINDOW. LOWER EDGE OF DOOR OPENING IS PARALLEL TO DECK LINE.

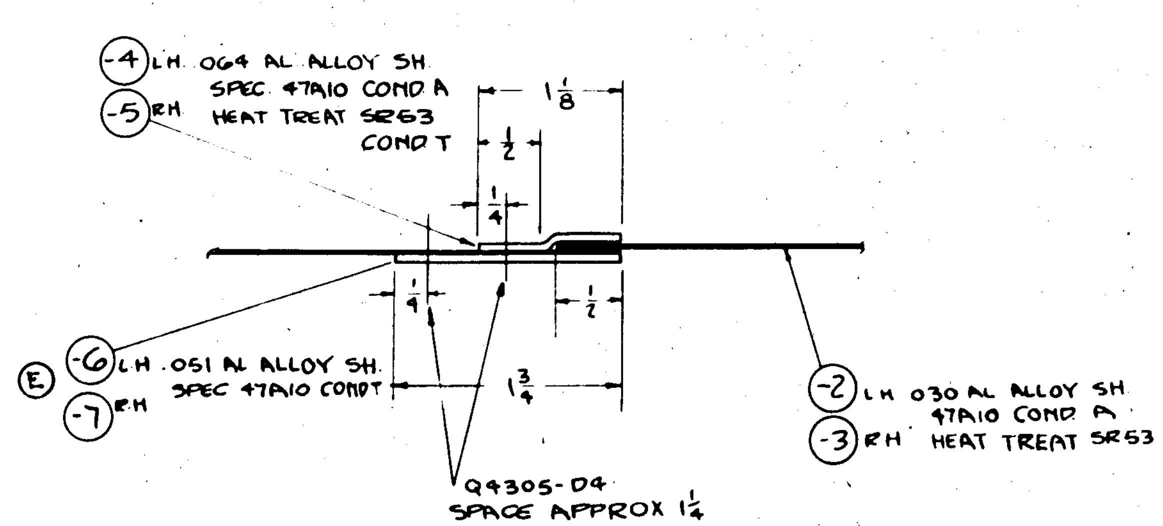

SECTION A-A
12" = 1 FT.

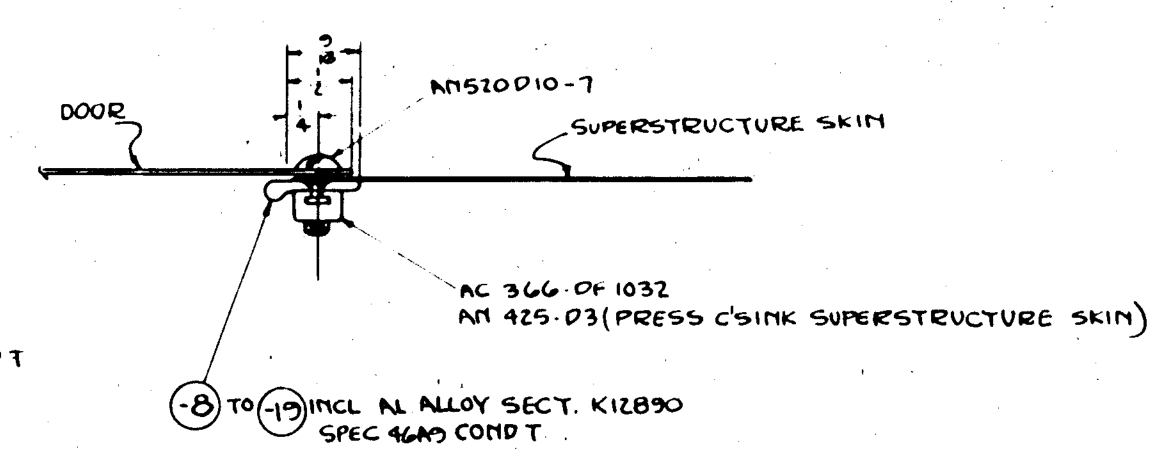

SECTION B-B
12" = 1 FT.

FINISH:-
Z-P-AV ON PBY-1
Z-P-AL ON PBY-2 & FUTURE

FINISH CODE	
Z	ANODIC TREATMENT
P	PRIMER
AP	ALUMINIZED PRIMER
C	CADMIUM PLATE

MAT.						
AN520-D10-7	17	17	17	17	17	17
AN425 D3						
AC366-DF1032	15	15	15	15	15	15
Q4305-D4						
68-A17-02	2	2	2	2	2	2

O.H.	MODEL	NEXT ASSY	REQ	PART
L/R	28-5MA	2885005	1 EA.	-19
L/R	28-5MC		1 EA.	-18
L/R	28-5ME		1 EA	-17
L/R	28-5MN		1 EA	-16
L/R	PBY-5B		1 EA	-15
				-14
L/R	PBY-5A		1 EA	-13
L/R	28-5AMC		1 EA	-12
L/R	PBY-5		1 EA	-11
L/R	28-5AMN	2885005	1 EA	-10
-1	PBY-4	2881005		-9
	PBY-4	2881005		-8
-1	PBY-3	2881005		-7
	PBY-3	2881005		-6
-1	PBY-2	2881005		-5
	PBY-2	2881005		-4
-1	PBY-1	2881005		-3
	PBY-1	2881005		2881968-2

REQUIREMENTS PER AIRPLANE — PARTS LIST PER ASSY. (PBY-1, PBY-2, PBY-3-4)

REPLACES
REPLACED BY
LIMIT ON DIMENSIONS UNLESS OTHERWISE SPECIFIED ± 1/32
[redacted]
STAMP PT. No. WHERE SHOWN

APPROVED: ECW — DATE 4-20-37
CALC. WT. 189 — ACT. WT.
SCALE 6" = 1'0"
AC
NAVY

MATERIAL	SPEC.	HEAT TREAT	FINISH
NOTED	NOTED	NOTED	NOTED

LOC B28 36 — DRAFT: MILLER — CHECK: 5-27-37 — EXAM — ENG.

CONSOLIDATED AIRCRAFT CORP. BUFFALO, N.Y.

NAME: DOOR - HULL SUPERSTRUCTURE - INSPECTION

OPP HAND 2881968-1

DWG SIZE G 2881968

DIETZGEN-MCKESSON CO. INC. BUFFALO — IMPERIAL TRACING CLOTH

SUPPLIES & EQUIPMENT CLASSIFICATION			
LET.	ALTERATION	DATE	BY
B	TRACED UP TO DATE		
C	ADDED REF -4, -5 PARTS		
D	AN3-13 WAS AN3-10 ON		
E	DELETED G/N		
F	AN3-15 WAS AN3-13 ON		
	ADDED 28A1046-230 & 43 X		
	28A1049-4 & 28A1049-6		
G	ADDED NOTE: "ALTERNATE --- COND.A"		
H	WT. CHG. NEG.		
	STOCK DIM. IN -7 NOTE "1/2		
	O.D. X .083 C.M. TUBE WAS		
	1/2" O.D. X X .065 C.M. TUBE		
	SPEC. AN-W-T-830 COND A		
	N WAS 44T18 NO WT. CHG		

A.V.G. ALL SER.

EDC 1629

AN3-14 (C) (D)
AN310-3
AN380-B2-2
DRILL #10 (.193)

28A1048

28A1048-2
28A1048-4 (D)

28A1047

PEEN & PRICK PUNCH 28A1048 TO LOCK BEFORE PUSHING THRU. SLOT IN 28A1047 IF NECESSARY

28A1050

PEEN TO LOCK

28A1049
28A1049-6 (C)

DRILL E (.250)
AN4-15
AN310-4
AN380-B2-2

(E) ADD 2 OMIT 4 CHANGE AFT 4 = 28A1046-230 ANTI-SEIZE

(2) REF.

(3) REF.

(4) 5/8 O.D. x .035 C.M. TUBE SPEC. 44T18

(5) 5/8 O.D. x .035 C.M. TUBE SPEC. 44T18

(5) REF.

(3) 5/8 O.D. x .035 C.M. TUBE SPEC. 44T18

(7)

(6) .037 C.M. SHT. SPEC. 47B14

(2) 1 1/4 O.D. x .049 C.M. TUBE SPEC. 44T18

2 1/4 | 19 3/4 | 19 3/4 | 19 1/4 | 2 1/2 | 1/4

64

PEEN TO LOCK

1 5/8

12

XP83Y-9	28A1063-4	1	
XP83Y-3	28A1063-3	1	
28-SHN	28A1063	8	
-7	28-SHN/HK	28DA5520	4
-6	28-SHN/HK	28DA5520	4
-5	28-SHN/HK	28DA5520	4
-4	28-SHN/HK	28DA5520	4
-3	28-SHN/HK	28DA5520	4
-2	28-SHN/HK	28DA5520	4
P.N.	MODEL	NEXT ASSY.	REQ.
REQUIREMENTS PER AIRPLANE			

(C) * NOTE
ALTERNATE MATERIALS FOR -2, -3, -4 & -5
CHROME-MOLY WELDED TUBING, AN-T-3, TYPE I, COND. N.
CHROME-MOLY SEAMLESS TUBING, AN-W-T-830, COND. N.

-10	P83Y-3	28A1063-5	1	AN380-B2-2			
-10	P83Y-3	28A1063-7	4	AN310-3			
-9	P83Y-2	28A1063-4	1	AN3-14			
-8	P83Y-2	28A1063-3	1	AN3-15			
-7	28-SHN/HK	28DA5520	4	AN4-15			
-6	28-SHN/HK	28DA5520	4	AN4-10			
-5	28-SHN/HK	28DA5520	2				
-5	28-SHN	28DA5520	4	" -5			
-4	28-SHN/HK	28DA5520	2	" -6			
-3	28-SHN/HK	28DA5520	4	" -5			
-2	28-SHN/HK	28DA5520	4	" -5			
	XP83Y	28A1063-2	1				
	28-SHN/HK	28A1063	2	28A1049-4			
	28-SHK/HK	28A1063	2	28A1049-6			
	P83Y-1	28A1063	1	28A1049			
	P83Y-4	28A1063	1	28A1050			
	P83Y-5	28A1063	1	28A1048			
	P83Y-6	28A1063	2	28A1047			
	P83Y-7	28A1063	1	28A1046			
P.N.	MODEL	NEXT ASSY.	REQ.	PART NO.			
REQUIREMENTS PER AIRPLANE				REQUIREMENTS PER ASSY.			

FINISH CODE
I ANODIC TREATMENT
P ZT PRIMED
AF ALUMINIZED PRIMER
C WHITE PLATE

NOTE: M.R.O. IN CLOSED TUBES (D)

(3 EQN) 28-SHK 1-72

REPLACED			
REPLACED BY			
LIMIT OR DIMENSIONS UNLESS OTHERWISE SPECIFIED			
SCALE 2 1/2-0			
MATL. NOTED	FINISH	NONE	
MAT'L SPEC.	SPEC. NO.	HEAT TREA	

ENG. FILE

CONSOLIDATED VULTEE AIRCRAFT CORPORATION

HANGER - ARM - BOMB RELEASING PLATFORM - FRONT

G 28-1961

SIZE

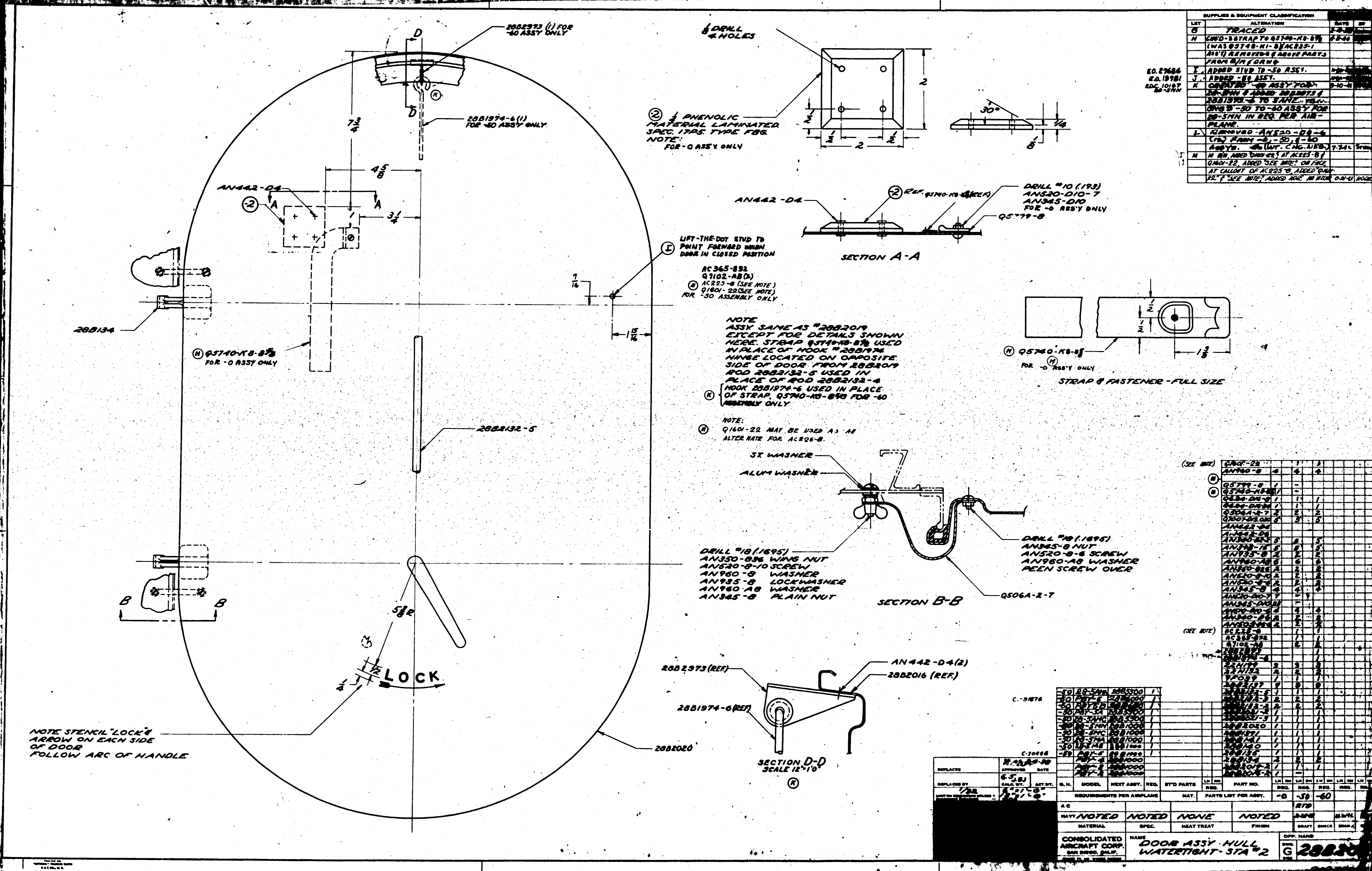

28B2973 (1) FOR -60 ASSY ONLY
D
D
K
28B1974-6(1) FOR -60 ASSY ONLY
7 3/4
4 5/8
AN442-D4
-2
A
A
3 1/4
28B134
H Q5740-K8-8⅝ FOR -0 ASSY ONLY
28B2132-5
B
B
5⅝R
1/2
1/4
LOCK
NOTE STENCIL "LOCK" & ARROW ON EACH SIDE OF DOOR FOLLOW ARC OF HANDLE
28B2020
1/8 DRILL 4 HOLES
-2 1/8 PHENOLIC MATERIAL LAMINATED SPEC. 17P5. TYPE FBG.
NOTE: FOR -0 ASS'Y ONLY
2
1/2
2
1/2
1/2
30°
1/4
1/8
AN442-D4
-2 REF. Q5740-K8-8⅝(REF)
DRILL #10 (.193) AN520-D10-7 AN345-D10 FOR -0 ASS'Y ONLY
Q5779-8
SECTION A-A
LIFT-THE-DOT STUD TO POINT FORWARD WHEN DOOR IN CLOSED POSITION
I
AC365-832
Q7102-A8(2)
M AC225-8 (SEE NOTE) Q1601-22 (SEE NOTE)
FOR -50 ASSEMBLY ONLY
7/16
1 15/16
NOTE
ASSY SAME AS #28B2019 EXCEPT FOR DETAILS SHOWN HERE. STRAP Q5740-K8-8⅝ USED IN PLACE OF HOOK #28B1974 HINGE LOCATED ON OPPOSITE SIDE OF DOOR FROM 28B2019 ROD 28B2132-5 USED IN PLACE OF ROD 28B2132-4
K HOOK 28B1974-6 USED IN PLACE OF STRAP, Q5740-K8-8⅝ FOR -60 ASSEMBLY ONLY
NOTE:
M Q1601-22 MAY BE USED AS AN ALTERNATE FOR AC225-8.
1/2
1/2
1 3/8
H Q5740-K8-8⅝
FOR -0 ASS'Y ONLY
STRAP & FASTENER - FULL SIZE
ST. WASHER
ALUM WASHER
DRILL #18 (.1695) AN350-836 WING NUT AN520-8-10 SCREW AN960-8 WASHER AN935-8 LOCKWASHER AN960-A8 WASHER AN345-8 PLAIN NUT
SECTION B-B
DRILL #18 (.1695) AN345-8 NUT AN520-8-6 SCREW AN960-A8 WASHER PEEN SCREW OVER
Q506A-2-7
28B2973 (REF.)
28B1974-6 (REF.)
AN442-D4(2)
28B2016 (REF.)
SECTION D-D SCALE 12"=1'0"
K
SUPPLIES & EQUIPMENT CLASSIFICATION
LET ALTERATION DATE BY
G TRACED
H CHG'D -3 STRAP TO Q5740-K8-8⅝ (WAS Q5748-K1-8)(AC225-1 ASS'Y) REMOVED -3 & ABOVE PARTS FROM B/M & DRWG 4-8-40
E.O. 27686 I ADDED STUD TO -50 ASSY.
E.O. 19781 J ADDED -50 ASSY.
EDC 10167 28-5MN K CREATED -60 ASSY FOR 28-5MN & ADDED 28B2973 & 28B1974-6 TO SAME. CHG'D -50 TO -60 ASSY FOR 28-5MN IN REQ. PER AIRPLANE. 9-10-41
L REMOVED AN520-D8-6 (12) FROM -0, -50, & -60 ASSYS. (WT. CHG. NEG.) 7-7-42
M H B/M, ADDED Q1601-22 AT AC225-8 & Q1601-22, ADDED "SEE NOTE" ON FACE AT CALLOUT OF AC225-8, ADDED "Q1601-22" & "SEE NOTE" ADDED NOTE
(SEE NOTE) Q1601-22
AN960-8
Q5779-8
Q5740-K8-8⅝
Q634-D16-8
Q634-D16-36
Q506A-2-7
Q7007-D13.032
AN442-D4
AN442-D6
AN380-832
AN348-15
AN935-8
AN960-A8
AN350-836
AN520-8-10
AN520-8-6
AN345-8
AN520-D10-7
AN345-D10
AN510-D10-6
AN360-D6
AN503-D6
(SEE NOTE) AC225-8
AC365-832
Q7102-A8
28B2973
28B1974-6
22H179
22H132
9F039
28B2137
28B2132-5
28B2132-3
28B2132-2
28B2021-2
28B2021-3
28B2020
28B1391
28B141
28B140
28B135
28B134
28B2016-2
28B2016-3
-50 28-5AM 28B5300
-50 PBY-6 28B6000
-60 PBY-5B 28B6000
-50 PBY-5A 28B5300
-50 28-5AMC 28B5300
-50 28-5MN 28B1000
-50 28-5MC 28B1000
-50 28-5MA 28B1000
-50 LB-3ME 28B1000
-50 PBY-5 28B1000
PBY-4 28B1000
PBY-3 28B1000
PBY-2 28B1000
C.-91876
C-30498
REPLACES
APPROVED DATE
REPLACED BY
1/32
CALC. WT. ACT. WT.
G. H. MODEL NEXT ASSY. REQ. STD PARTS LH RH REQ. PART NO.
REQUIREMENTS PER AIRPLANE MAT. PARTS LIST PER ASSY. -0 -50 -60
AC
NAVY NOTED NOTED NONE NOTED
MATERIAL SPEC. HEAT TREAT FINISH
DRAFT CHECK
CONSOLIDATED AIRCRAFT CORP. SAN DIEGO, CALIF.
NAME DOOR ASSY - HULL WATERTIGHT - STA #2
OPP. HAND
DWG. G 28B2020

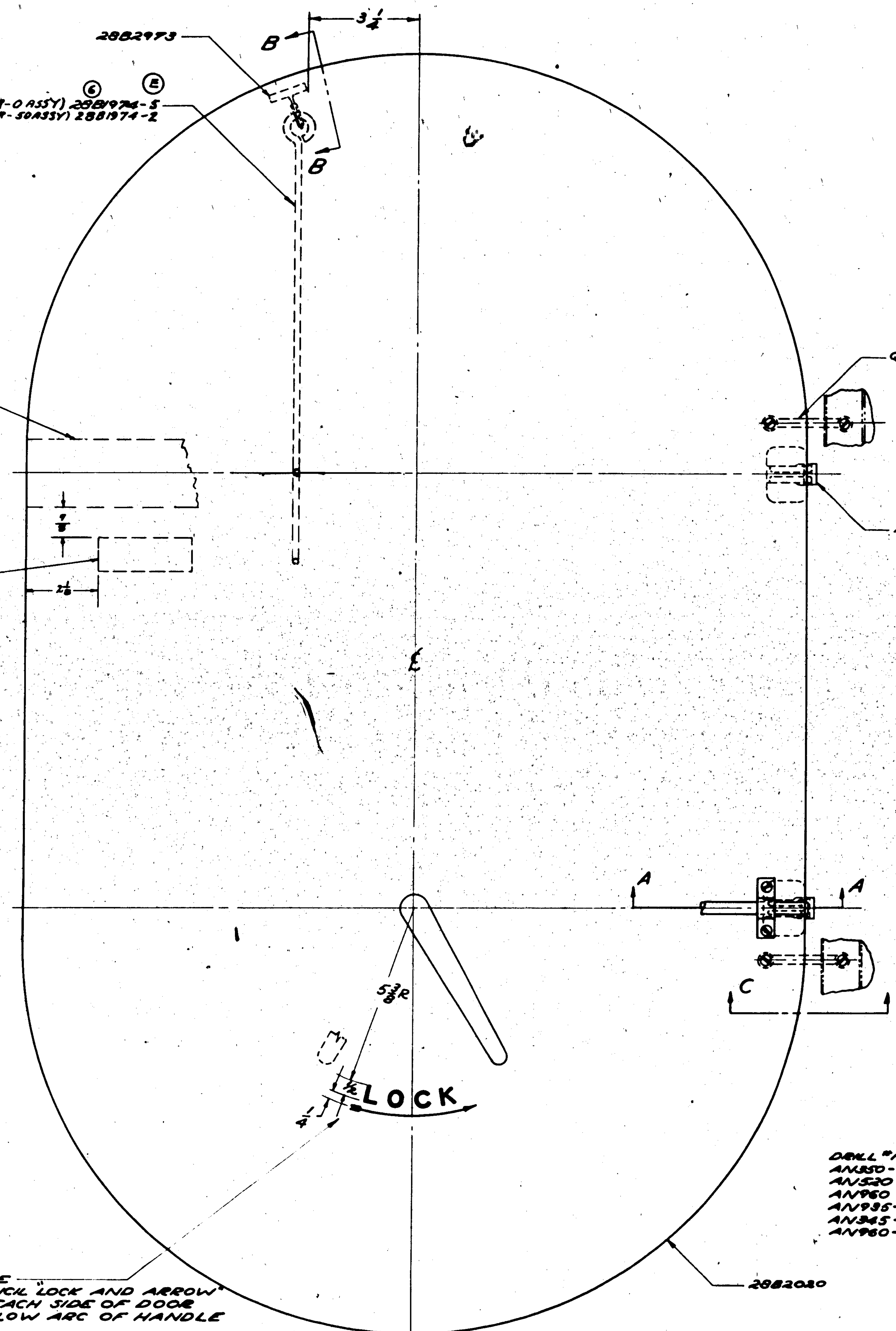

NOTE
STENCIL "LOCK AND ARROW" ON EACH SIDE OF DOOR
FOLLOW ARC OF HANDLE

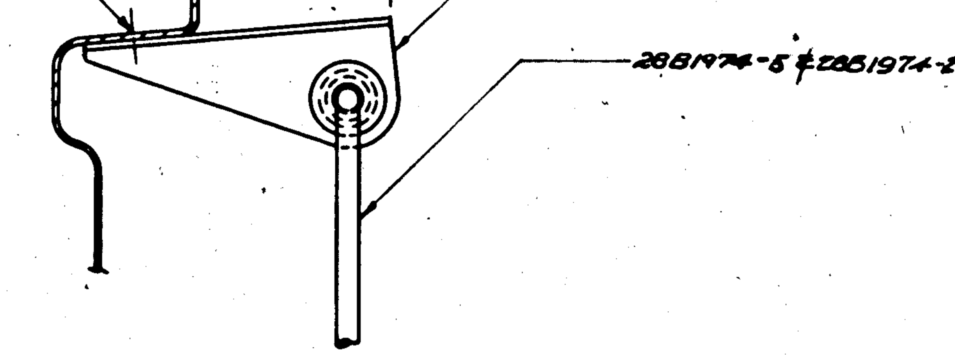

SECTION B-B

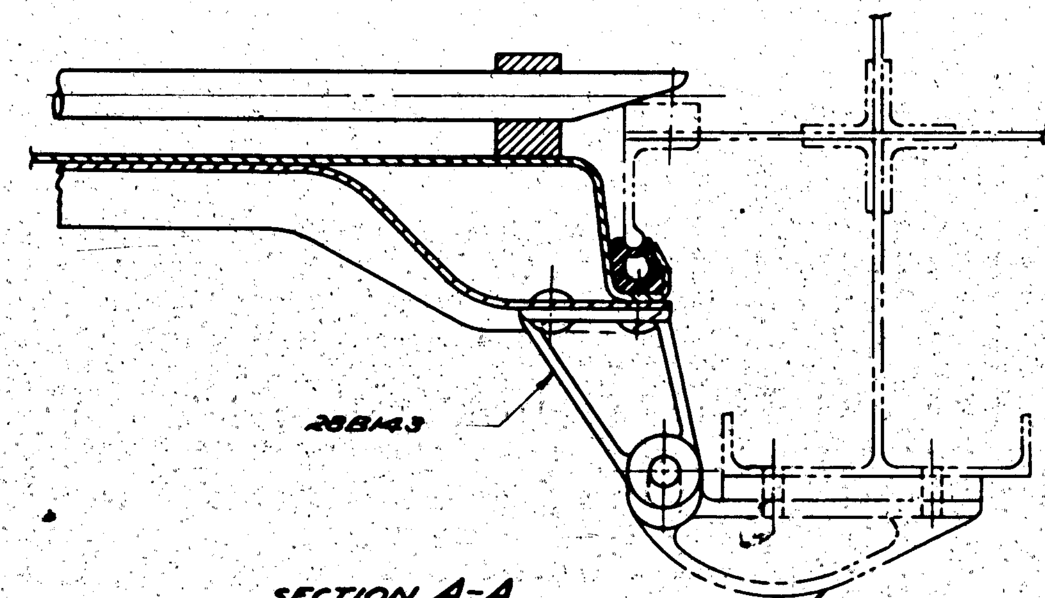

SECTION A-A

NOTE
ALL DETAILS NOT SHOWN
ARE SAME AS 28B2019

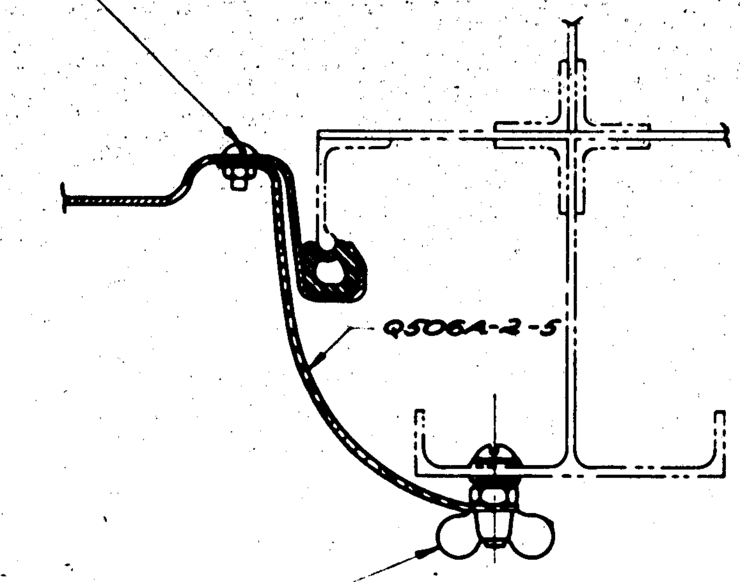

SECTION C-C
BONDING DETAILS

(H) NOTE
-2 3/8 x 1 x 2 1/4 RECLAIMED SPONGE
(J) RUBBER A.C. SPEC. 26578, GRADE B.

SUPPLIES & EQUIPMENT CLASSIFICATION

	LET	ALTERATION	DATE	BY
	D	TRACED	2-4-38	[illegible]
E.O. 24168	E	28B1974-5 WAS 28B1974-2	[illegible]-40	[illegible]
E.O. 24163A	F	ADDED MODELS 28-5ME, 28-5MA, 28-5MC, & 28-5MN & PBY-5	4-3-41	OLS[illegible]
E.C.C. 27176 & A.V.O.-[illegible] [illegible]	G	CREATED -50 ASSY FOR ARMY MODEL -50 SAME AS -0 EXCEPT 28B1974-2 REPLACES 28B1974-5	[illegible]-16-41	LARS[illegible]
E.O. 12399	H	ADDED 28B2017-2 TO -50 ASSY; ADDED 28B2021-3 (REF) TO FACE OF DWG. WT. CHANGE NEGLIGIBLE	[illegible]-4-41	LARSON
	J	ADDED TO FACE OF DWG. NOTE "RECLAIMED ..... GRADE B." WT. CHG. NEG.	9-12-42	M. MOLL

PART NO.	-0 REQ.	-50 REQ.
AN520-D10-6	12	12
Q506A-2-5	2	2
Q624-D16-8	1	1
Q624-D16-24	1	1
Q7007-D13-[illegible]	5	5
AN505-D6-6	2	2
AN340-D6	2	2
AN510-D10-6	4	4
AN345-D10	22	22
AN520-D10-7	6	6
AN345-8	4	4
AN520-8-6	2	2
AN520-8-10	2	2
AN350-836	2	2
AN960-A8	6	6
AN935-8	2	2
AN393-15	5	5
AN380-[illegible]	5	5
AN442-D6		
AN442-D4		
AN960-8	4	4
28B1974-2		1
28B2017-2		1
22H199	3	3
22H132	2	2
9F039	1	1
28B2973	1	1
28B2137	9	9
28B2132-4	1	1
28B2132-3	2	2
28B2132-2	2	2
28B141	1	1
28B2021-2	1	1
28B2021-3	1	1
28B2020	1	1
28B2019-2	1	1
28B1974-5	1	
28B1391	1	1
28B143	2	2
28B140	1	1
28B135	1	1

C-91876

C-70496

REQUIREMENTS PER AIRPLANE

O.H.	MODEL	NEXT ASSY.	REQ.
-0	PBY-5	28B6000	1
-50	28-5AMN	28B5500	1
-50	28-5AMC	28B5500	1
-50	PBY-5A	28B5000	1
-0	PBY-5B	28B6000	1
-0	28-5MN	28B1000	1
-0	28-5ME	28B1000	1
-0	28-5MA	28B1000	1
-0	28-5MC	28B1000	1
-0	PBY-5	28B1000	1
-0	PBY-4	28B1000	
-0	PBY-3	28B1000	
-0	PBY-2	28B1000	

REPLACES		X.A.[illegible] APPROVED	2-4-38 DATE
REPLACED BY		6.14 CALC. WT.	ACT. WT.
V32	LIMIT ON DIMENSIONS UNLESS [illegible]	6" = 1'-0" / 12" = 1'-0" SCALE	

[redacted]

A C				RTD			
NAVY NOTED	NOTED	NONE	NOTED	[illegible]		H.W.H.	R
MATERIAL	SPEC.	HEAT TREAT	FINISH	DRAFT	CHECK	EXAM.	[illegible]

CONSOLIDATED AIRCRAFT CORP.
SAN DIEGO, CALIF.

NAME: DOOR ASS'Y HULL WATERTIGHT - STA #4

OPP. HAND: /

DWG. SIZE G — 28B201[illegible]

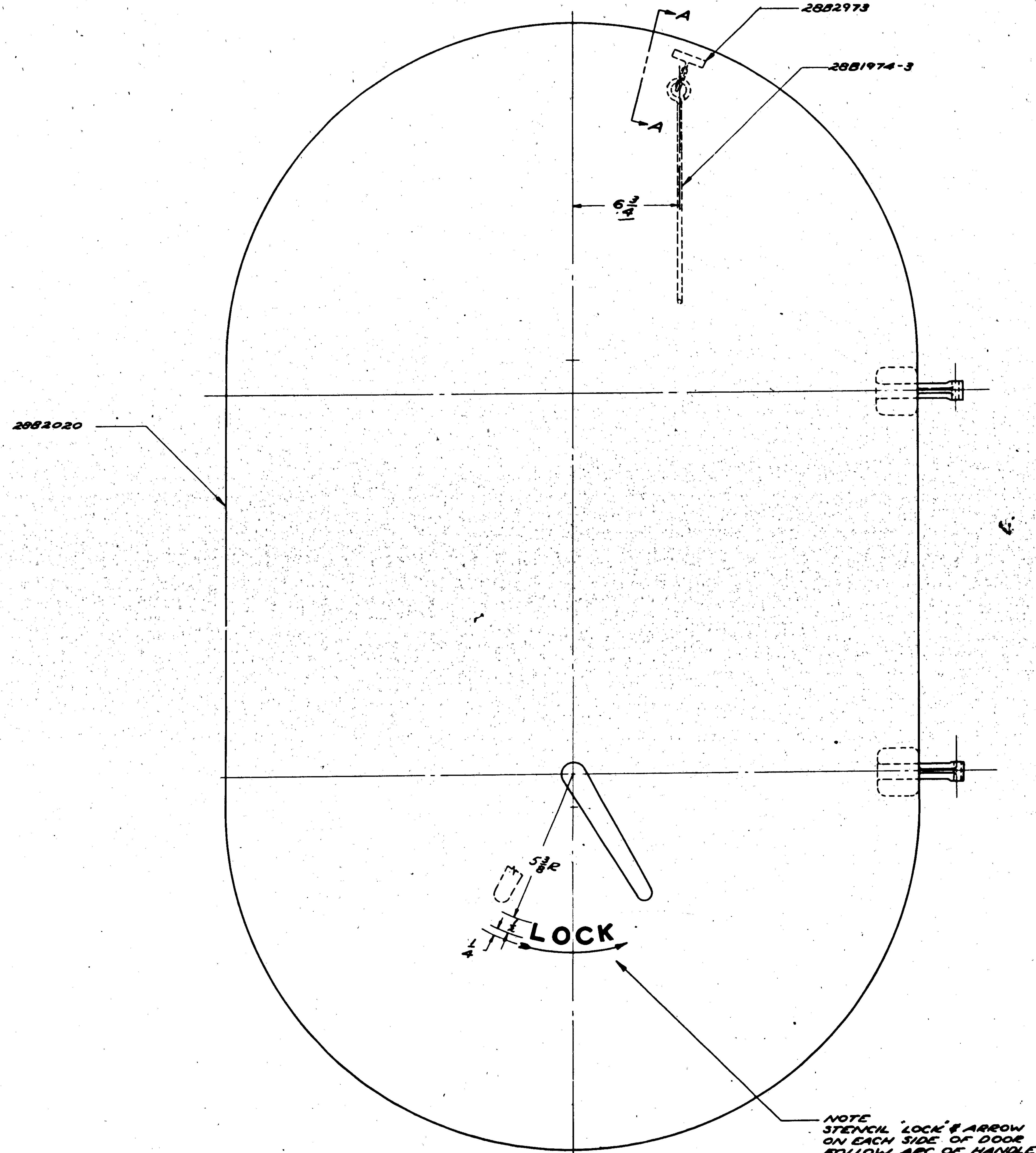

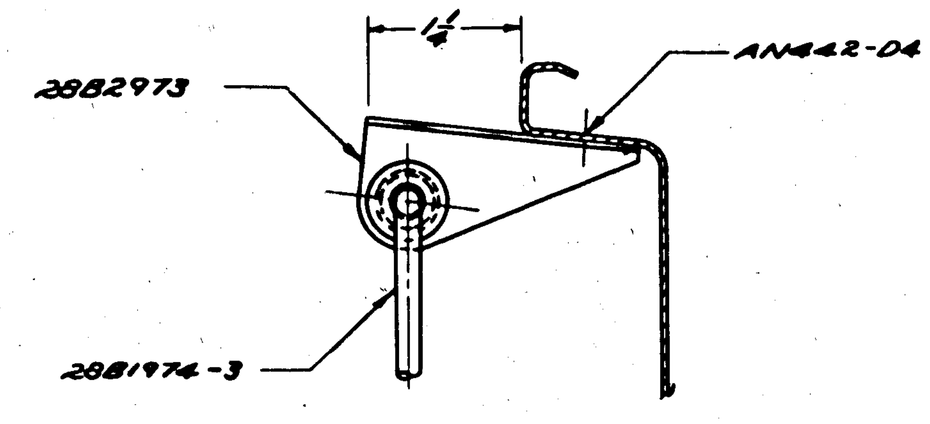

SECTION A-A

NOTE
DOOR ASSEMBLY #2882018 AT STA. #6 IS IDENTICAL TO ASSY 2882019 AT STA #7 EXCEPT HOOK #2881974-3 AS SHOWN

SUPPLIES & EQUIPMENT CLASSIFICATION			
LET	ALTERATION	DATE	BY
E	TRACED	2-3-38	

PART NO.	REQ.	REQ.	REQ.	REQ.	REQ.
AN520 D10-6	12				
AN960-8	4				
Q7007-88-0?	6				
Q3061-3-5	2				
Q634-D16-36	1				
Q634-D16-8	1				
AN442-04					
AN442-06					
AN380-?2-2	6				
AN393-15	6				
AN935-8	2				
AN960-A8	6				
AN350-B36	2				
AN520-8-10	2				
AN520-8-6	2				
AN345-8	4				
AN520-D10-7	6				
AN345-D10	22				
AN510-D10-6	4				
AN340-D6	2				
AN505-D6-6	2				
28B140	1				
22H199	3				
28B141	1				
22H132	2				
9F039	1				
2882019-2	1				
2882973	1				
2882137	9				
2882132-4	1				
2882132-3	2				
2882132-2	2				
2882021-2	1				
2882021-3	1				
2882020	1				
2881974-3	1				
2881391	1				
28B135	1				
28B134	2				

PARTS LIST PER ASSY.

O. H.	MODEL	NEXT ASSY.	REQ.
	PBY-5A	28B5500	1
	PBY-6B	28B6400	1
	PBY-4	28B1000	
	PBY-3	28B1000	
	PBY-2	28B1000	

REQUIREMENTS PER AIRPLANE

REPLACES	APPROVED	DATE 2-3-38	
REPLACED BY	CALC. WT. 6.74	ACT. WT.	
V32	SCALE 6"=1'-0", 12"=1'-0"		

AC				STD			
NAVY NOTED	NOTED	NONE	NOTED	2-2-37		H.W.H.	
MATERIAL	SPEC.	HEAT TREAT	FINISH	DRAFT	CHECK	EXAM.	

CONSOLIDATED AIRCRAFT CORP.
SAN DIEGO, CALIF.

NAME: DOOR ASS'Y - HULL WATERTIGHT STA #6

OPP. HAND

DWG. SIZE G 28820...

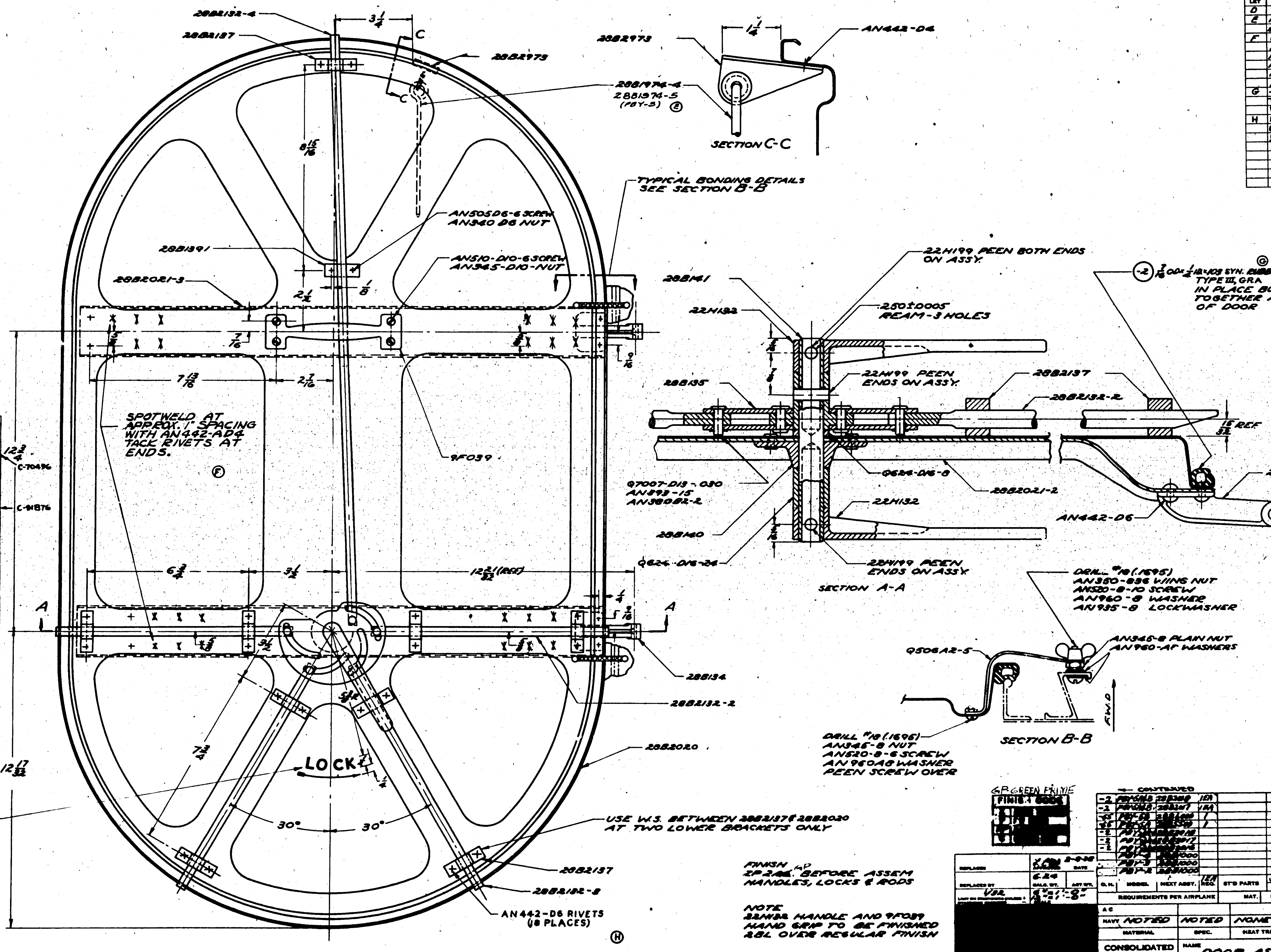

FINISH GP ZP 2A6. BEFORE ASSEM HANDLES, LOCKS & RODS

NOTE
22H132 HANDLE AND 9F039 HAND GRIP TO BE FINISHED 2BL OVER REGULAR FINISH

SUPPLIES & EQUIPMENT CLASSIFICATION

LET	ALTERATION	DATE	BY
D	TRACED	3-3-38	[illegible]
E	ADDED -55 ASSEM., 28B1974-5 REPLACED 28B1974-4, INC. E.O. 10058	11/27/39	[illegible]
F	CHANGED METHOD OF ATTACHING 28B2021-2 & -3 FROM RIVETS TO SPOTWELD AT APPROX. 1" SPACING WITH AN442AD4 TACK RIVETS AT ENDS.	1/24/42	[illegible]
G	-2 MAT. " SYN. RUBBER TUBING, TYPE III GRA" WAS "GUM RUBBER TUBING, COMM." NEG. WT. CHG.	9-23-42	[illegible]
H	REMOVED FROM B/M & FACE OF DWG. AN520-D10-6 (12), AN520-D10-7 (6), & AN345-D10 (18) REPLACED WITH AN442-D6 RIVETS. WT. CHG. NEG.	6-15-43	[illegible]

D.N.	MODEL	NEXT ASSY	REQ.
-55	PBY-5	28B1000	1
-55	28-5ME, MM	28B1000	1
-55	28-5 AM	28B1000	1
-56	28-5AMM	28B5500	1
-58	28-5AMC	28B5500	1
-55	PBY-5	28B4000	1
-2	28-5 AMA / AM	28B2018	1
-2	28-5 MA MM / ME MC	28B2018	1
-2	PBY-5	28B2018	1
-2	28-5 AMC / AMM	28B2017-50	1
-2	28-5 ME MC / MA MM	28B2017-0	1
-2	PBY-5	28B2017-0	1
-2	28-5 AMA / AMM	28B2016	1
-4			
-2	PBY-5A	28B2016	1
-2	28-5 ME MC / MA MM	28B2016	1
-2	PBY-5B	28B2016	1
-2	PBY-5	28B2016	1

REQUIREMENTS FOR AIRPLANE.

PART NO.	REQ.	REQ. (-55)
AN960-8	4	4
Q624-D16-24	1	1
Q624-D16-8	1	1
Q506-A2-5	2	2
Q7007-D13-030	5	5
AN442-D4		
AN442-D6		
AN380-B2-2	5	5
AN393-15	5	5
AN935-8	2	2
AN960-A8	6	6
AN350-836	2	2
AN520-8-10	2	2
AN520-8-6	2	2
AN345-8	4	4
AN345-D10	4	4
AN510-D10-6	4	4
AN340-D6	2	2
AN505-D6-6	2	2
28B1974-5		1
28B140	1	1
22H199	3	3
28B141	1	1
22H132	2	2
9F039	1	1
28B2973	1	1
28B2137	4	4
28B2132-4	1	1
28B2132-3	2	2
28B2132-2	2	2
28B2021-3	1	1
28B2021-2	1	1
28B2020	1	1
28B1974-4	1	
28B1391	1	1
28B136	1	1
28B134	2	2
28B2019-2	1	1

PARTS LIST PER ASSY.

← CONTINUED

D.N.	MODEL	NEXT ASSY.	REQ.
-2	PBY-6A/B	28B2019	1EA
-2	PBY-6A/B	28B2017	1EA
-65	PBY-6B	28B1000	1
-55	PBY-5A	28B5500	1
-2	[illegible]	28B2016	
-2	[illegible]	28B2017	
-2	[illegible]	28B2016	
	PBY-4	28B1000	
	PBY-3	28B1000	
	PBY-2	28B1000	

REQUIREMENTS PER AIRPLANE

GP GREEN PRIME
FINISH CODE

REPLACES	DRAWN	DATE
	X.ABU	2-8-38
REPLACED BY	CALC. WT. 6.24	ACT. WT.
V32	SCALE 1/4"=1'-8"	

MATERIAL	SPEC.	HEAT TREAT	FINISH
NAVY NOTED	NOTED	NONE	NOTED

-55
DRAFT: RKD / CHECK: Berger / ENGR.: HWH
2-11-38

CONSOLIDATED AIRCRAFT CORP.
SAN DIEGO, CALIF.

NAME: DOOR ASSY HULL WATERTIGHT STA #7

OPP. HAND
G 28B20[illegible]

LET	ALTERATION	DATE	BY
	SUPPLIES & EQUIPMENT CLASSIFICATION		
A	TRACED	2-6-38	
B	CHANGED MATERIAL FROM .040 AL. ALLOY SPEC. 47A10 TO ALCLAD (.040) SPEC. 47A8-T. NO WT. CHG.	5-23-41	
C	IN SECTION B-B DIM. 1 7/8 WAS 1 3/4. WT. CHG. NEG.	4-1-43	

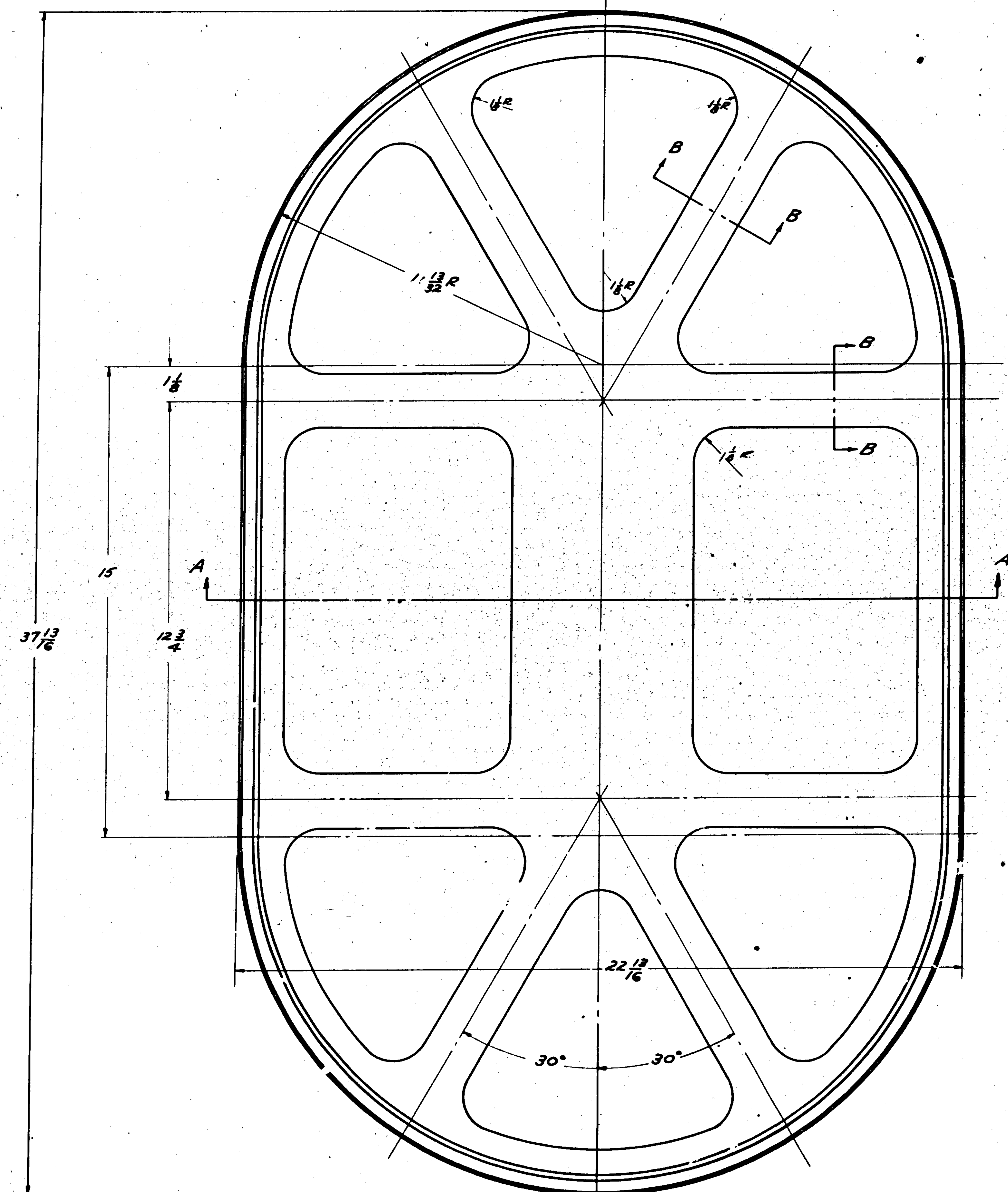

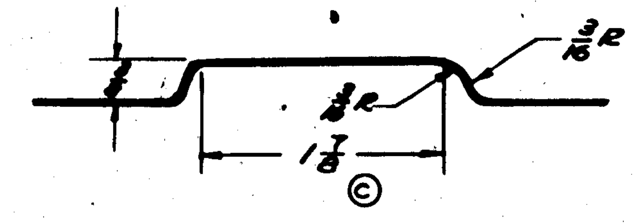

SECTION B-B
SCALE 12" = 1'-0"

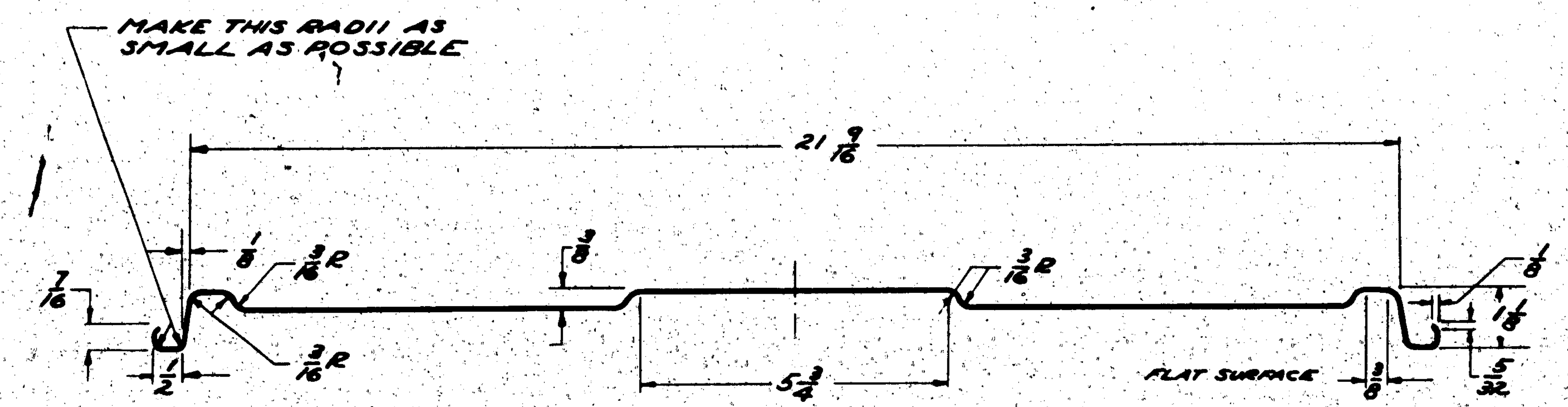

SECTION A-A

G.H.	MODEL	NEXT ASSY.	REQ.
	28-5AMC&AMN	28B2017	1
	28-5ME&MN		1
	28-5MA&MC		1
	PBY-5A&5B	28B2017	1
	28-5AMC&AMN	28B2016	1
	28-5ME&MN		1
	28-5MA&MC		1
	PBY-5A&5B	28B2016	1
	28-5AMN	28B2019	1
	28-5AMC	28B2019	1
	PBY-5A	28B2019	1
	28-5ME,MN	28B2019	1
	28-5MA,MC	28B2019	1
	PBY-5B	28B2019	1
	PBY-5	28B2019	1
	28-5AMN	28B2018	1
	28-5AMC	28B2018	1
			1
	PBY-5A	28B2018	1
	28-5ME,MN	28B2018	1
	28-5MA,MC	28B2018	1
	PBY-5B	28B2018	1
	PBY-5	28B2018	1

G.H.	MODEL	NEXT ASSY.	REQ.
	28-5 AMC AMN	28B2017	1
	PBY-5A	28B2017	1
	28-5 ME MA MN MC	28B2017-0	1
	PBY-5B	28B2017-0	1
	PBY-5	28B2017-0	1
	28-5 AMC AMN	28B2016	1
	PBY-5A	28B2016	1
	28-5 ME MA MN MC	28B2016	1
	PBY-5B	28B2016	1
	PBY-5	28B2016	1
	PBY-4	28B2019	
	PBY-4	28B2018	
	PBY-4	28B2017	
	PBY-4	28B2016	
	PBY-3	28B2019	
	PBY-3	28B2018	
	PBY-3	28B2017	
	PBY-3	28B2016	
	PBY-2	28B2019	
	PBY-2	28B2018	
	PBY-2	28B2017	
	PBY-2	28B2016	

REQUIREMENTS PER AIRPLANE — ST'D PARTS — LH RH REQ. — PART NO. — ✦ MAT. — PARTS LIST PER ASSY.

REPLACES	X... APPROVED	2-6-38 DATE	
REPLACED BY	2.19 CALC. WT.	ACT. WT.	
1/32 LIMIT ON DIMENSIONS UNLESS OTHERWISE SPECIFIED	6" = 1'-0" SCALE		

[redacted]

A C				
NAVY ALCLAD (.040)	47A8-T	NONE	NONE	RTD 2-11-37 / HWH / R
MATERIAL	SPEC.	HEAT TREAT	FINISH	DRAFT / CHECK / ENGR.

CONSOLIDATED AIRCRAFT CORP.
SAN DIEGO, CALIF.

NAME: DOOR-HULL-WATERTIGHT

OPP. HAND

DWG. G 28B20

SUPPLIES & EQUIPMENT CLASSIFICATION			
LET	ALTERATION	DATE	BY
B	TRACED	4-27-38	
C	DIM. 28⅝ R. WAS 27½ R. NO WT. CHG.	7-21-38	

E.O. A48715

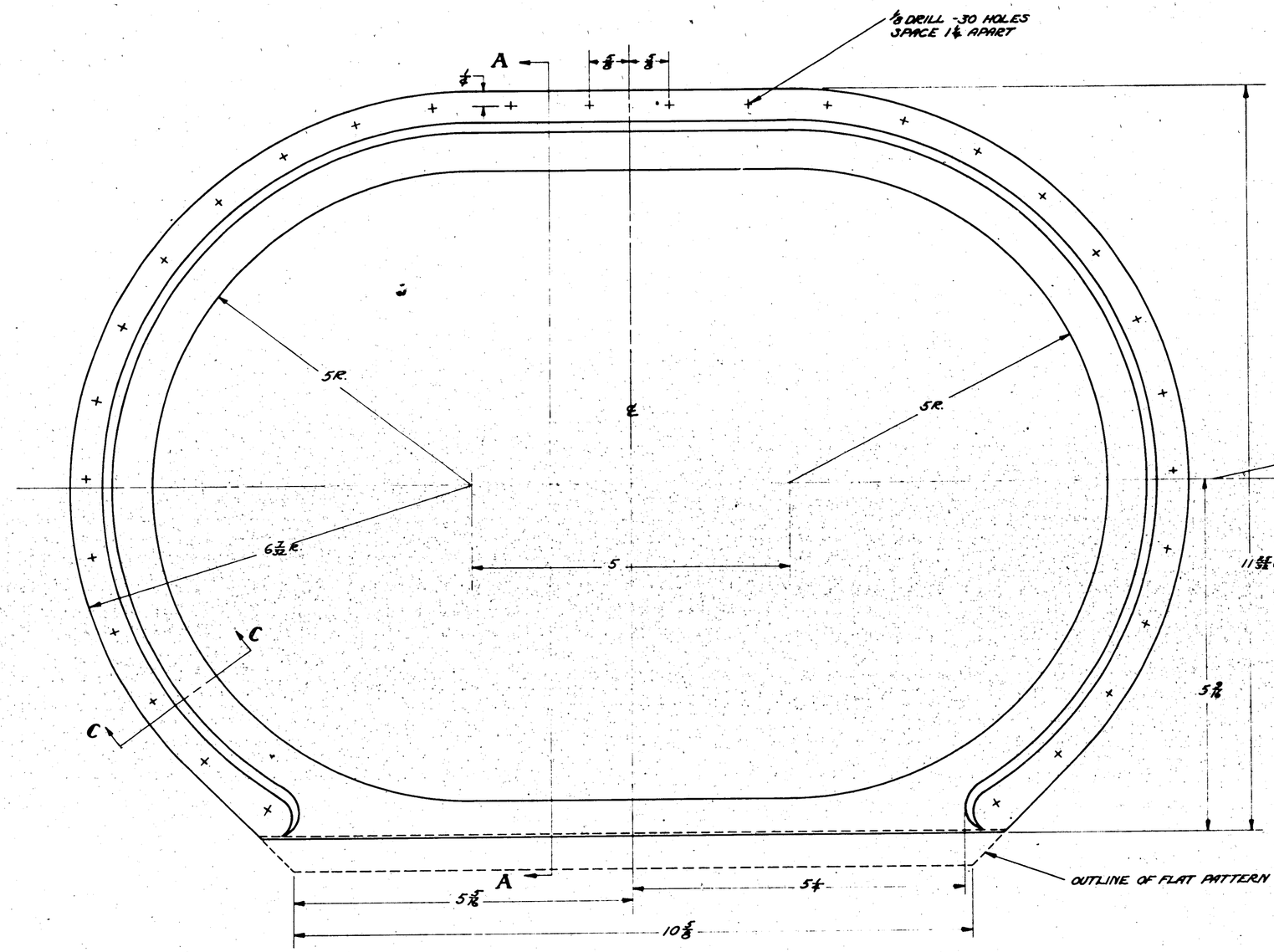

DEVELOPED VIEW AT B-B

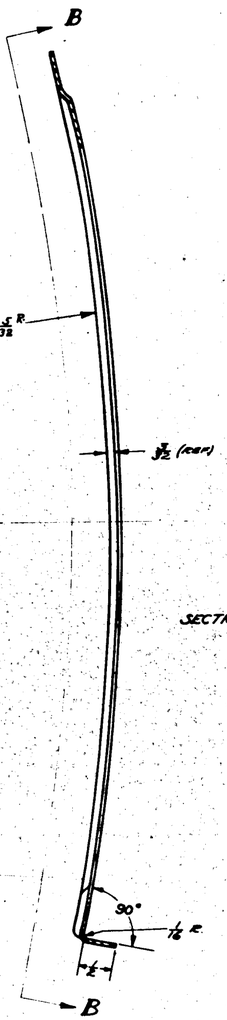

SECTION A-A

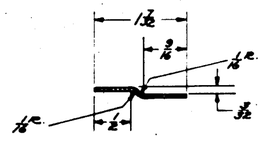

SECTION C-C

FINISH
Z ANODIC TREATMENT
P 4-27 PRIMER
AP ALUMINIZED PRIMER
C ALUMINUM PLATE

O. H.	MODEL	NEXT ASSY.	REQ.	ST'D PARTS	LH RH REQ.	PART NO.	LH REQ.	RH REQ.	LH REQ.	RH REQ.	LH REQ.	RH REQ.	LH REQ.	RH REQ.
	28-SAMM	28B1304	2											
	28-SMC	28B1304	2											
	28-SME	28B1304	2											
	28-SMC	28B1304	2											
	28-SMA	28B1304	2											
	PBY-3B	28B1304	2											
	PBY-3A	28B1304	2											
	PBY-5	28B1304	2											
	PBY-4	28B1304												
	PBY-4	28B1304												
	PBY-3	28B1304-1												
	PBY-3	28B1304												

REQUIREMENTS PER AIRPLANE	MAT.	PARTS LIST PER ASSY.
AC		
NAVY		

MATERIAL	SPEC.	HEAT TREAT	FINISH
.032 AL. ALLOY SHEET (24S)	57A10 CONV. A	SR-53 CONV. T	Z-P

REPLACES
REPLACED BY
APPROVED 6-22-38 DATE
.24 GALC. WT. ACT. WT.
SCALE 12" = 1'-0"

CONSOLIDATED AIRCRAFT CORP. SAN DIEGO, CALIF.

NAME FRAME - HULL MECHANIC'S WINDOW-INSIDE

E.T.D. 6-22-38 B.O.I. 7-21-38
DRAFT CHECK EXAM.
OPP. HAND
DWG. G
28B205

PRODUCTION & REPLACEMENT NOTE- 2882111 & 2881111 ARE INTERCHANGEABLE.

SECT. K-K
FULL SCALE

(N) PLATE .040 X 13 1/2 X 19 AL. ALLOY SHT. (2450) SPEC. 47A8 COND. A TRIM TO CONTOUR

THIS BEAD 3/16 DEEP (K) ALL OTHERS 1/16 DEEP

(-2) .030 AL. ALLOY SHEET (2450) SPEC. 47A10 COND. A HT. SER 53

SECTION J-J
FULL SCALE

USE DIE "N 2863" FOR THIS CUTOUT CENTRALLY LOCATED

BEND UP THIS EDGE AFTER MAKING CUTOUT (SEE SECT. J-J) BEND ONLY ALONG REAR EDGE OF CUTOUT WHERE THERE IS NO BEAD.

LET	ALTERATION	DATE	BY
G	TRACED TO DATE	2-6-51	Bennett
H	MADE "2437"	4-19-51	Bennett
I	MADE "DWG [illegible] 11/16"	4-19-51	Bennett
J	CHANGED SECTION "H-H" & "FF"	5-4-51	WHITE
K	MOVED SEC. H-H TO OPPOSITE END OF CUTOUT. 3/8 WAS 3/4 & 1 5/8 WAS 1 3/8. REMOVED #2 BEAD & SEC. EE FROM CUTOUT (NO MISSING). SEC. L-L WAS H-H. ADDED SEC. VIEW OF L-L & NOTE A - "THIS --- DEEP" & "ALL BEADS --- DEEP" NO WT. SEE.	5-7-51	Mc.
L	REMOVED SECT H-H "1 BEAD" CUT OUT. ADDED LIGHTENING HOLE # -7. -8 & -9 WAS -3 & -4 RESP & WAS 43 3/8 & WAS WITH 3/8 DIA. ATYPICAL RIVET. REVISED PART OF "K" CHANGE	4-18-52	ALLEN
M	7 9/32 WAS 6 1/4 DIM. 7 3/8 WAS 7 1/2 DIM. 7 1/2 WAS 16.622 5/16 & WAS 8 3/4	10-28-52	Finnie
N	CHANGE RADII TO SHOW TRUE SIZES		
-7	SHOW SIZE CHANGE OF STOCK .040 X 13 X 19	8-8-52	Allen
P	8 7/32 DIM. WAS 7 29/32 DIM.	1-14-53	Finnie
Q	8 7/16 DIM. WAS 8 7/32 DIM.	9-17-53	Finnie

R.R. 10016
E.O. 18261
EDC 3108
E.O. A35044

SECTION L-L (K)
SCALE — 12" = 1'0"

SECTIONS C, D & E
FULL SCALE

SECTION	"G"
C	37°
D	96 1/2°
E	33°

SECTION A-A
FULL SCALE

SECTION B-B
FULL SCALE

SECTIONS F-F
FULL SCALE

NOTE:
ORDINATES IN THIS VIEW EXTEND TO INSIDE EDGE OF STAMPING

NOTE:
ALL RIVETS MARKED # TO BE DRIVEN AT ASS'Y. WITH FIN STRUCTURE.
AN426-D6 RIVETS THRU ALL GUSSETS.

FINISH: PARTS, Z-P
ZAL COMPLETE ASS'Y.

NOTE
ALL BEADS TO BE 1/16 DEPTH EXCEPT (K) #3 WHICH IS 3/16 DEEP.

											2881111-7 1
											2881111-21 2
											-22 2
											-20 2
											-19 2
											-18 2
											-17 2
28-5AMC	2881006	1									2881111-12 2
28-5AMC	2881006	1									2881111-9 1
28-5AMC W/ HL	2881006	1									-8 1
PBY-5A	2881006	1									2881111-2 1
PBY-5	2881006	1									
PBY-5B	2881006	1	AN426-D6								
			AN442-D6								

LH	RH	PART NO.	REQ'D

REPLACES 2881111 (SEE NOTE ABOVE)
REPLACED BY
UNLESS OTHERWISE SPECIFIED ± 1/64 ± 1°

APPROVED	R.A.U.		7-6-38 DATE
CALC. WT.	426	ACT WT.	
SCALE	4"=1'-0"		
AC			
NAVY	NOTED	NOTED	NOTED
MATERIAL	SPEC.	HEAT TREAT	FINISH

O.H.	MODEL	NEXT ASSY.	REQ.	ST'D PARTS
REQUIREMENTS PER AIRPLANE				
NOTED				

MAT.

PARTS LIST PER ASSY.

VER	Allowed Bennett
4-3-51	6-4-51
DRAFT	CHECK	LEAD.	ENG.
---	---	---	---

CONSOLIDATED AIRCRAFT CORP. BUFFALO, N.Y.

NAME: RIB - HULL - LOWER FIN TOP

DEPT. HANG

DWG. G 2882111

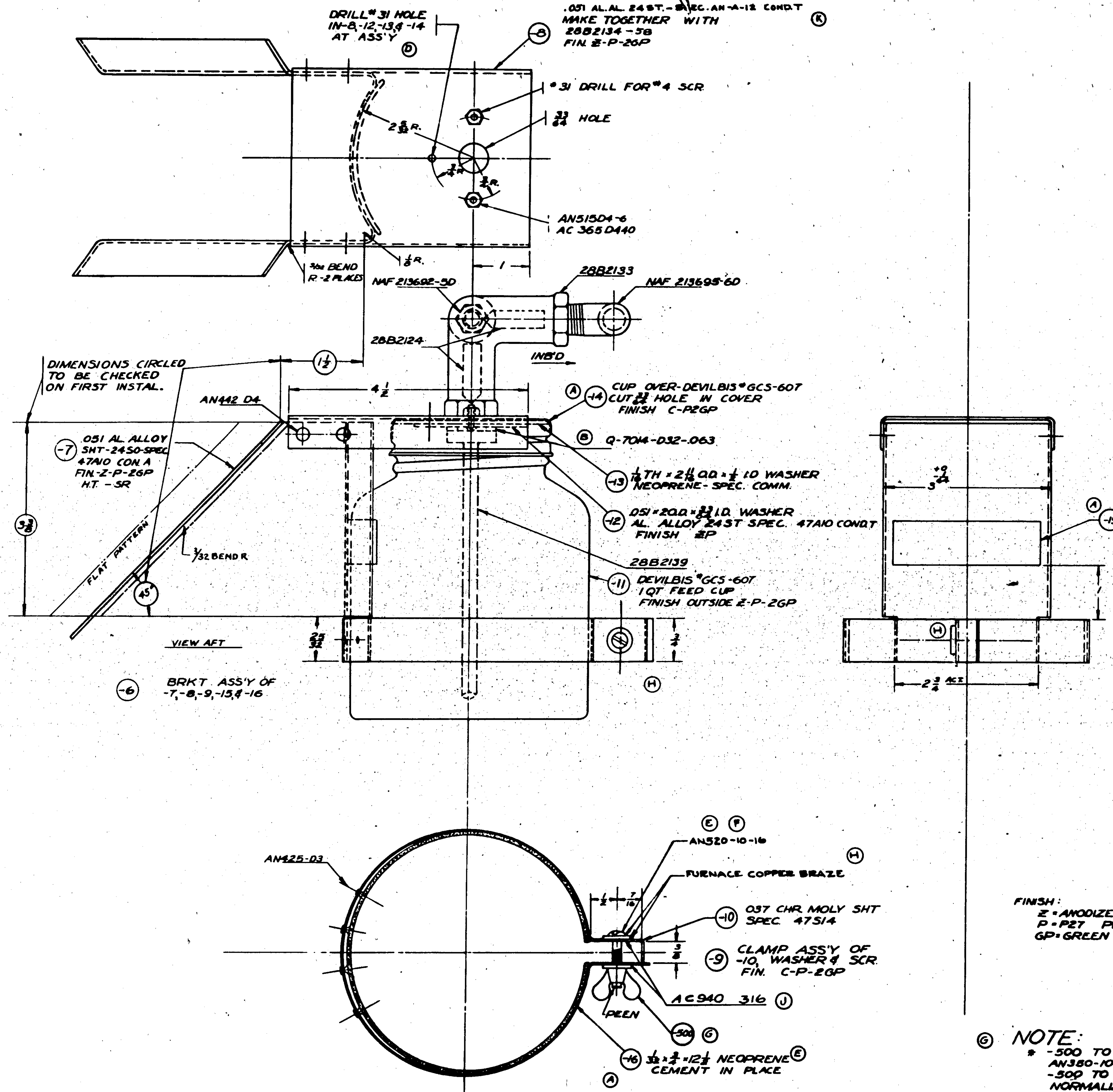

(C) HEAT TREAT SPEC. (SR-59) COND T ALL SO MATERIAL

FINISH:
Z = ANODIZE
P = P27 PRIMER
GP = GREEN PRIMER

(G) NOTE:
* -500 TO CONSIST OF: AN380-1032, PAINTED
-500 TO BE ADDED AFTER NORMALIZING & FINISHING PROCESSES HAVE BEEN COMPLETED.

SUPPLIES & EQUIPMENT CLASSIFICATION

	LET	ALTERATION	DATE	BY
E.O. 25039-A	A	-15 WAS 9/32-6-3/4 -16 WAS 9/32-6-12 1/2		
		-14 WAS INCLUDED IN -11	[illegible]	[illegible]
E.O. 28707	B	ADDED Q-7014-D32-.063	[illegible]	[illegible]
E.O. A5252	C	FOR-7, 24S0 COND. A WAS	5-16-41	[illegible]
		24ST, COND. T ADDED NOTE.		
E.O. A4598	D	ADDED #31 DRILL FOR 28-5-	6-10-41	[illegible]
		ME, MC, AMC, & MA		
	E	AN520-10-14(1) WAS AN520-832-14		
		(1) & AN380-1032 (1) WAS AN350-		
		B36 (1). NO WT. CHG.	6-2-42	[illegible]
E.O. A45570	F	AN520-10-16(1) WAS AN520-10-14(1)		
		(NO WT. CHG.)	6-22-42	[illegible]
E.O. A61135	G	-500 WAS AN380-1032. NOTE		
		"-500 - - - BEEN COMPLETED"		
		WT. CHG. NEG.	5-10-43	[illegible]
	H	ON FACE REMOVED WELD SYMBOLS		
		& NOTE "WELD" ADDED NOTE		
		"FURNACE COPPER BRAZE." WT.		
		CHG. NEG.	8-21-43	O.BAY
	J	AC940 316(2) WAS AN960-8(2) NO WT. CHG.	8-21-43	O.BAY
	K	".051 AL.AL. 24ST.-SPEC. AN-A-		
		12 COND. T MAKE TOGETHER		
		WITH 28B2134-58 FIN Z-P-		
		2GP" WAS "MAKE TOGETHER		
		WITH 28B2134-2 FIN Z-P-2		
		GP." NO WT. CHG.	11-12-47	[illegible]

PART NO	REQ
AC940 316	2
& -500	1
AN520-10-16	1
28B2141-10	1
-9 SUB ASSY	
AN442-D4	
AN425-D3	
28B2141-16	1
-15	1
-9	1
-8	1
28B2141-7	1
-6 SUB ASSY	
NAF 213695-6D	1
NAF 213692-5D	1
AN515D4-6	2
AC365D440	2
Q7014-D32-063	1
28B2124	2
28B2133	1
28B2139	1
28B2141-14	1
-13	1
-12	1
-11	1
28B2141-6	1

#83 TO 1264 — 2540N

D.N.	MODEL	NEXT ASSY.	REQ
-9	B24-A	32B5033	1
-13	B24-A	}	1
-16	B24-A	32B5033	1
-9	PB2Y-3	29F6906	1
-9	B24-D	32B5033	1
-13	B24-D	}	1
-16	B24-D	}	1
	PBY5B	28B2140	1
	28-5ANW	}	1
-9	LB-30	32B5033	1
-13	LB-30	}	1
-16	LB-30	}	1
	28-5AMA	28B2140	1
-7-9	PBY-5A	[illegible]	1EA
-7-9	PBY-5	[illegible]	1EA
	28-5AMC	28B2140	1
	28-5MC	28B2140	1
	28-5ME	28B2140	1
	28-5MN	28B2140	1

REQUIREMENTS PER AIRPLANE — MAT — PARTS LIST PER ASSY. -0

REPLACES — 1.10 CALC. WT.
REPLACED BY — ACT. WT.
LIMITS ON DIMENSIONS NOT OTHERWISE SPECIFIED ± 1/32 — SCALE 1/2" = 1'-0"
STAMP PART NUMBER WHERE SHOWN

MATERIAL	SPEC	HEAT TREAT	FINISH
NOTED	NOTED	NOTED	NOTED

DRAFT H95 — CHECK — LOC — ENG.

CONSOLIDATED AIRCRAFT CORP. SAN DIEGO, CALIF.

BRACKET-HULL-WINDOW SPRAY CLEANER-LIQUID CUP

OPP HAND - NONE

G 28B2141

R 1613[illegible]

LET	ALTERATION	DATE	BY
S	TRACED NO. WT. CHG	7-23-41	[illegible]
T	IN -0 ASSEM REPLACED 28B1274-2 WITH 28B1274-7 WT CHG. NEG	6-29-43	[illegible]
U	FOR -0 & -55 ASSYS. -10 REPLACES -2. IN B/M -10, 7/16 O.D. x 1/4 I.D. x 16, SYN. RUB. TUBE; CAC. RU212; GRA, TYPE III; ZM 048 (1) WAS -2, 7/16 O.D. x 1/4 I.D. x 14 NEOPRENE TUBE, CAC. RU 212 (1), NO WT. CHG.	9-17-43	D.DAY
V	-10 SYN RUB TUBE CAC RU 213 GR "A" TYPE II" WAS SYN RUB TUBE CAC RU 212 GR. "A" TYPE II". NO WT.CHG.	[illegible]	BRYTS

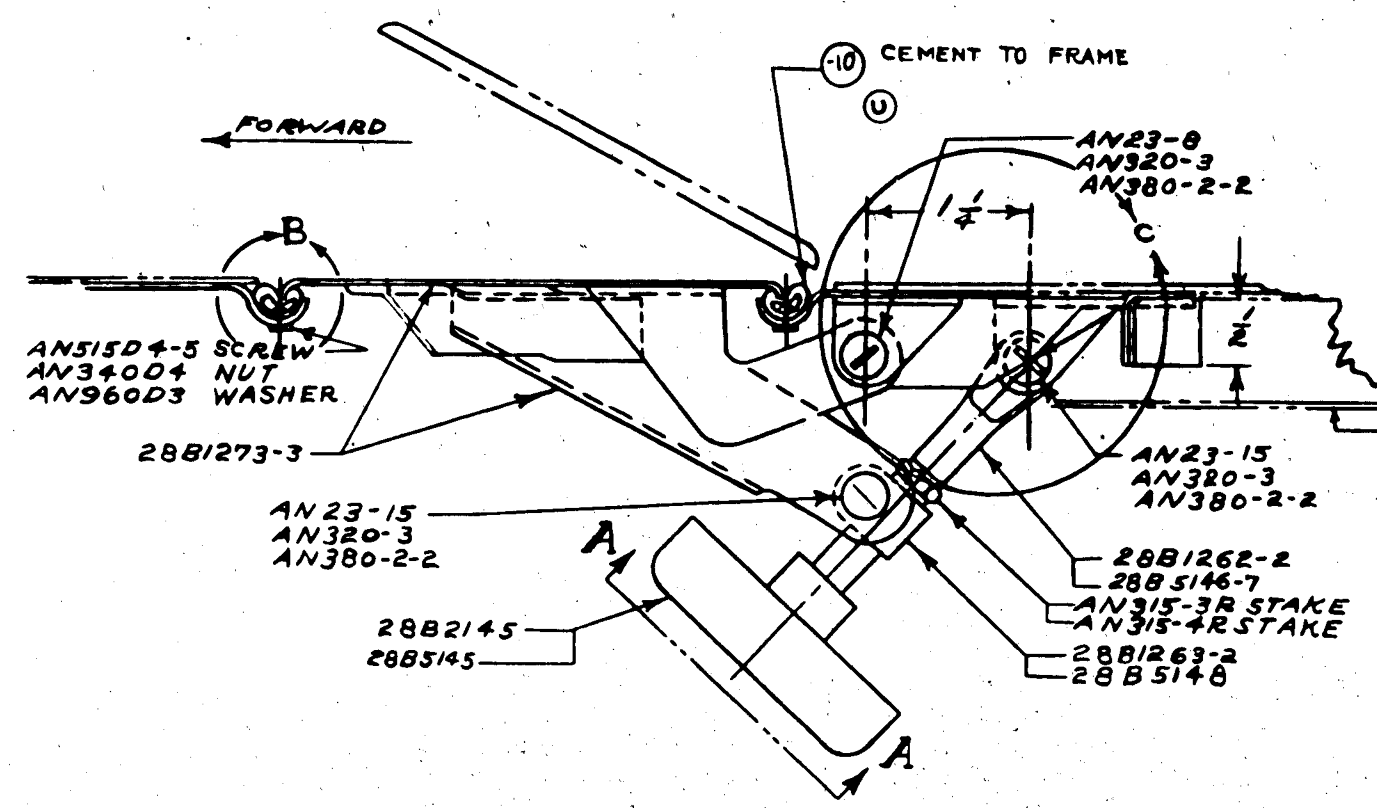

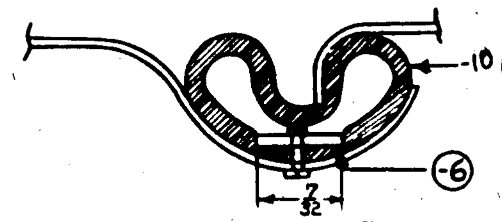

DETAIL B SKETCH

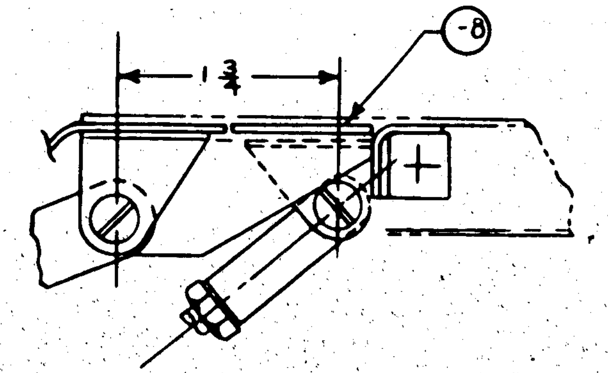

DETAIL C FOR -55 ASS'Y

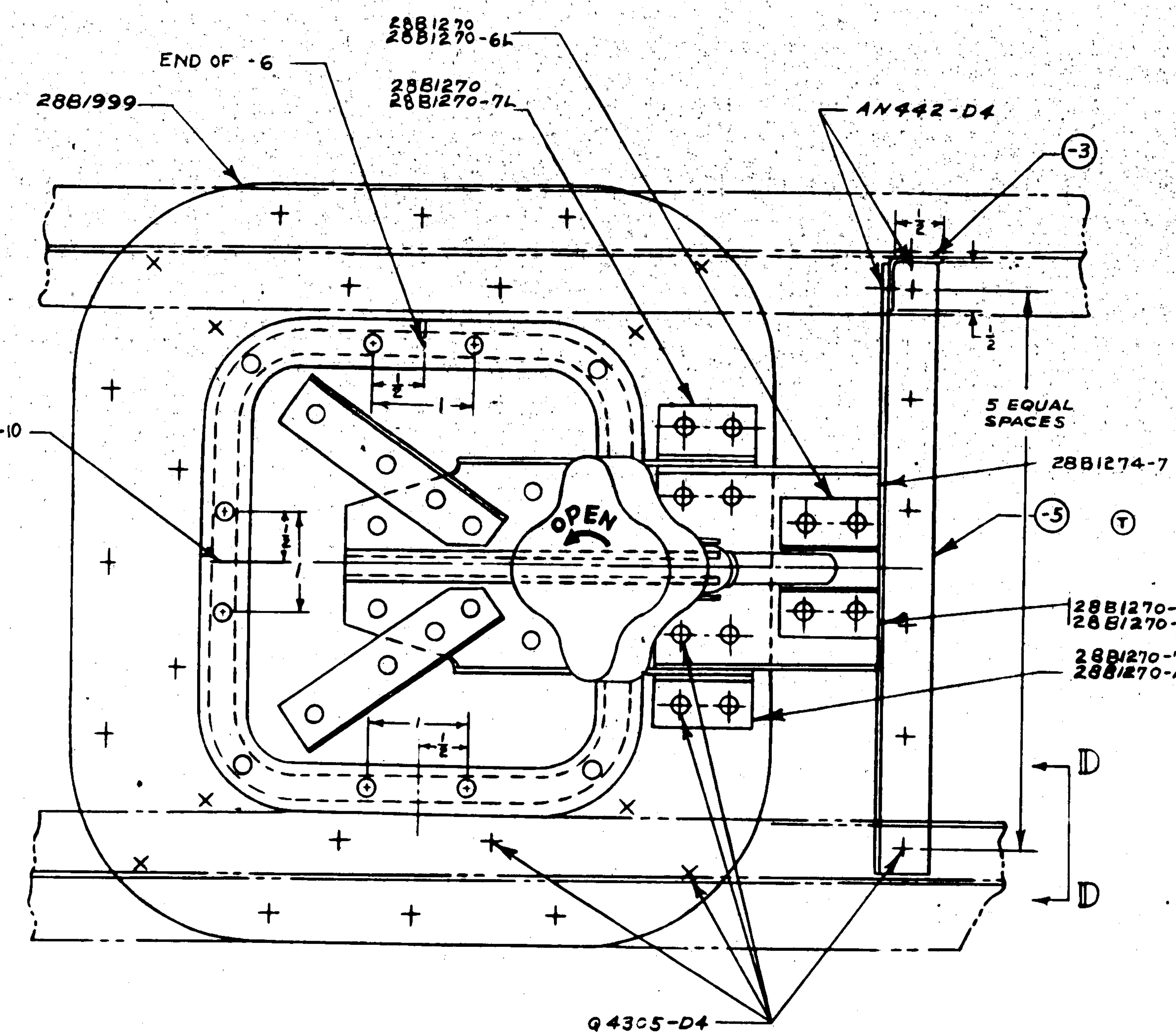

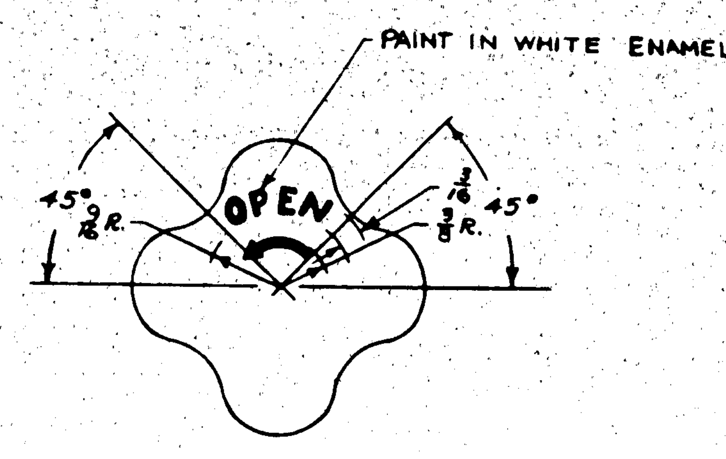

VIEW A~A
SHOWING LETTERING ON 28C1066-2 CASTING (ON 28B2145 ASSEM.)

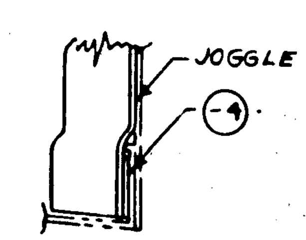

VIEW D~D

NOTES:
1. K 6240 x 5/8 MAY BE USED AS ALTERNATE MAT'L FOR -5.
2. AN23 SCREWS MUST BE FREE TO TURN BY HAND AFTER ASSEMBLY.

C-91876

C-70496

ASSY DASH NO	MODEL	NEXT ASSY	REQ.
-55	PBY-5B	28B6000	1
-55	28-5AMN	28B5500	1
-55	PBY-5	28B6000	1
-55	28-5AMC	28B5500	1
-55	28-5MN	28B1000	1
-55	28-5ME	28B1000	1
-55	28-5MC	28B1000	1
-55	28-5MA	28B1000	1
-55	PBY-5A	28B5500	1
-55	PBY-5	28B1000	1
	PBY-4	28B1000	1
	PBY-3	28B1000	1
	PBY-2	28B1000	1

REQUIREMENTS PER AIRPLANE

REPLACES 28B2150 6/24/37 — .73 CALC WT

REPLACED BY — ACT WT

LIMIT ON DIMENSIONS UNLESS OTHERWISE SPECIFIED ± 1/32 — SCALE 12"=1'0"

STAMP PART NUMBER WHERE SHOWN

PART No	STOCK	MATERIAL	SPEC	REQ -0	REQ -55	REQ -3	REQ -4	REQ -5
AN442-D4								
Q4305-D4								
AN960-D3				9	12			
AN515-D4-5				9	12			
AN315-4R				–	1			
AN340-D4				9	12			
AN320-3				4	4			
AN315-3R				1	–			
AN380-2-2				4	4			
AN23-15				2	2			
AN23-8				2	2			
28B1270				2	1			
28B5148				–	1			
28B5146-7				–	1			
28B5145				–	1			
28B1270-7R				–	1			
28B1270-7L				–	1			
28B1270-6R				–	1			
28B1270-6L				–	1			
28B1274-7				1	1			
28B1273-3				1	1			
28B2145				1	–			
28B1999				1	1			
28B1263-2				1	–			
28B1262-2				1	–			
28B1270-1				2	–			
-10	7/16 O.D. x 1/4 I.D. x 16	SYN. RUB. TUBE CAC. RU 213 GR.A, TYPE III	ZM. 048	1	1			
-8	.040 x 1 1/8 x 2 7/8	24ST ALC		–	1			
-6	.051 x 2 1/2 x 4 3/8	24ST AL AL	47A1D-T	–	2			
SEE NOTE 1 -5	Y 2-A11T x 5 7/8			1	1			
-4	.045 x 1/2 x 1/2	24ST AL AL	47A8-T	1	1			
-3	.040 x 3/4 x 1 1/4	24ST AL AL	47A8-T	1	1			

PARTS LIST PER ASSY.

A C		S.VANNBERGER				MOFFATT	
NAVY NONE	Z-P-26P	6-29-37					R
HEAT TREAT	FINISH	DRAFT	CHECK	STRUCT	MAT	APPROV	ENG

NAME INSTALLATION - HULL NAVIGATOR'S VENTILATOR

OPP. HAND

DWG SIZE G — 28B2150

CONSOLIDATED AIRCRAFT CORP. SAN DIEGO, CALIF.

R

28B2150

SUPPLIES & EQUIPMENT CLASSIFICATION			
LET	I	ALTERATION	DATE	BY
D		TRACED	9-2-39	
E		WAS V8R (SHT AA)	10-30-40	
F		ADDED (2) 2885008-2 (E) AN442-04	12-16-40	
G		OVERALL LENGTH CHG. FROM 46 3/4		
		TO 46 1/2 CUT OFF AFT END OF FLANGE	2-21-41	
		REVISE SEE DETAIL A		
H		CHANGED QTY PER OF ITEM 6 FROM		
		WAS 2882008-1, TO 2B 2882008-2	3-14-41	
J		REMOVED DETAIL A &	6-13-41	
		ADD DETAIL E" TO DRW'G.		
		CREATED -55 ASS'Y.		
		-10 REPLACES -2.		
K		REMOVED 2881967 FROM -55	7-9-41	
		IN 8/M & ADDED * NOTE		
L		OVERALL DIM. 46 1/4 WAS 46 1/2	12-26-41	

2882274-3

AN442-04

E.O. 24533
E.O. 29793 - PBY-5, 28-5ME
E.O. 30044

PBY-5, 28-5ME - E.O.C. - LIMITED 4-28-42
E.O.C. 28-5MA, MC, MM, ME & PBY-5

E.O. A6432

FOR -55 ASS'Y SEE DETAIL "E"

(10) SAME AS -2 EXCEPT CUT OUT ADDED

21 5/8

10 3/8 M.P.A.R.

12 APPROX

2885008-2
AN442-04

1" DIA FLAT EACH FASTENER

46 3/4

2882271-3

DETAIL "E" -55 ASS'Y ONLY

SECTION B-B

2 REF

33 CORRUGATIONS

7/16 DIA - 5 HOLES

1 1/4 PITCH

2882224-3

AN442-03

2881967 COTTON FABRIC WASHER

220035 STANLEY FASTENER

BELTFRAME 133

SECTION A-A

SECTION C-C

SECTION D-D

*NOTE

ANCHOR NUTS & STANLEY FASTENERS ARE TO BE FINISHED AS PER SPEC. ZF-28-006 #02.28 SPEC. ZF-28-006 #02.28: ANCHOR NUTS (STEEL) & STANLEY FASTENERS. APPLY 1 BRUSH COAT OF ZINC CHROMATE PRIMER TO THE CONTACTING SURFACE OF THE NUT OR FASTENER. APPLY 2 COATS OF PRIMER TO THE SUPPORTING SURFACE. ASSEMBLE WITH ZINC CHROMATE PASTE IN THE JOINT SUCH THAT EXCESS MATERIAL IS SQUEEZED OUT AT ALL BOUNDARIES. REMOVE THE EXCESS MATERIAL IN SUCH A MANNER AS TO FORM A FILLET.

MATERIAL:
040 AL ALLOY SHT. SPEC. 47A10
COND A H.T. 3R 53 (COND. T)

FINISH:
Z-P BEFORE ATTACHING 220035 FASTENERS 2GP COMPLETE ASS'Y

FINISH CODE	
Z	ANODIC TREATMENT
P	P-37 PRIMER
AP	ALUMINIZED PRIMER
C	CADMIUM PLATE

6P GREEN PRIME

| | | |

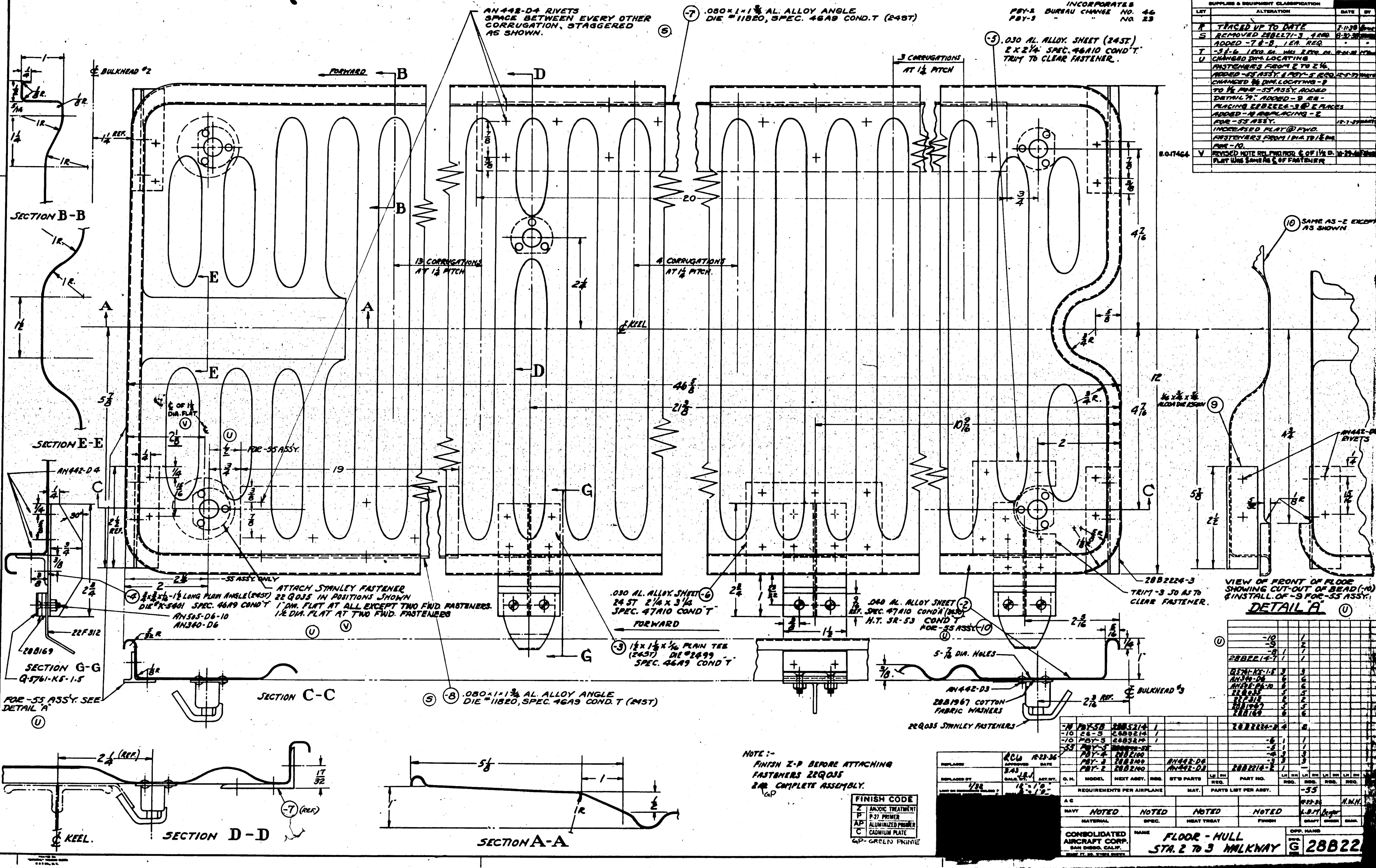

NOTE :-
FINISH Z-P BEFORE ATTACHING FASTENERS 22Q035
2 GP COMPLETE ASSEMBLY.

FINISH CODE	
Z	ANODIC TREATMENT
P	P-27 PRIMER
AP	ALUMINIZED PRIMER
C	CADMIUM PLATE

GP - GREEN PRIME

SUPPLIES & EQUIPMENT CLASSIFICATION

LET	ALTERATION	DATE	BY
R	TRACED UP TO DATE	8-11-38	
S	REMOVED 28B2271-3, 4 REQ. ADDED -7 & -8, 1 EA. REQ.	8-30-38	
T	-3 & -6 1 REQ. EA. WAS 2 REQ. EA.	11-24-38	
U	CHANGED DIM. LOCATING FASTENERS FROM 2 TO 2 1/16. ADDED -55 ASSY. & PBY-5 REQ. CHANGED ¼ DIM. LOCATING -9 TO ½ FOR -55 ASSY. ADDED DETAIL "A". ADDED -9 REPLACING 28B2224-3 @ 2 PLACES ADDED -10 REPLACING -2 FOR -55 ASSY. INCREASED FLAT @ FWD. FASTENERS FROM 1 DIA. TO 1½ DIA. PER -10.	12-5-39 / 12-7-39	
V	E.O.17464 REVISED NOTE REL. FWD FAST. ℄ OF 1½ D. FLAT WAS SAME AS ℄ OF FASTENER	10-29-40	

PART NO.	REQ.	REQ.
-10		1
-9		2
-8	1	1
28B2214-7	1	1
Q5761-K5-1.5	3	3
AN340-D6	6	6
AN505-D6-10	6	6
22Q035	5	5
22F312	2	2
28B1967	5	5
28B169	6	6
28B2224-3	4	2
-6	1	1
-5	1	1
-4	3	3
-3	3	3
28B2214-2	1	—

D. N.	MODEL	NEXT ASSY.	REQ.	STD PARTS
-10	PBY-5B	28B5214	1	
-10	28-5	28B5214	1	
-10	PBY-5	28B5214	1	
-55	PBY-5	28B2100-55		
	PBY-4	28B2100		
	PBY-3	28B2100		AN442-D4
	PBY-2	28B2100		AN442-D3

REQUIREMENTS PER AIRPLANE | MAT. | PARTS LIST PER ASSY. | -55

REPLACES | APPROVED RCW 12-23-36 | REPLACED BY | CALC. WT. 3.43 J.R.J. | ACT. WT. 1/32 | 12"=1'0" 3"=1'0"

[redacted]

A C				12-23-36	H.W.H.
NAVY NOTED	NOTED	NOTED	NOTED	L.B.M.	Berger
MATERIAL	SPEC.	HEAT TREAT	FINISH	DRAFT	CHECK

CONSOLIDATED AIRCRAFT CORP. SAN DIEGO, CALIF.

NAME: FLOOR - HULL STA. 2 TO 3 WALKWAY

G 28B22

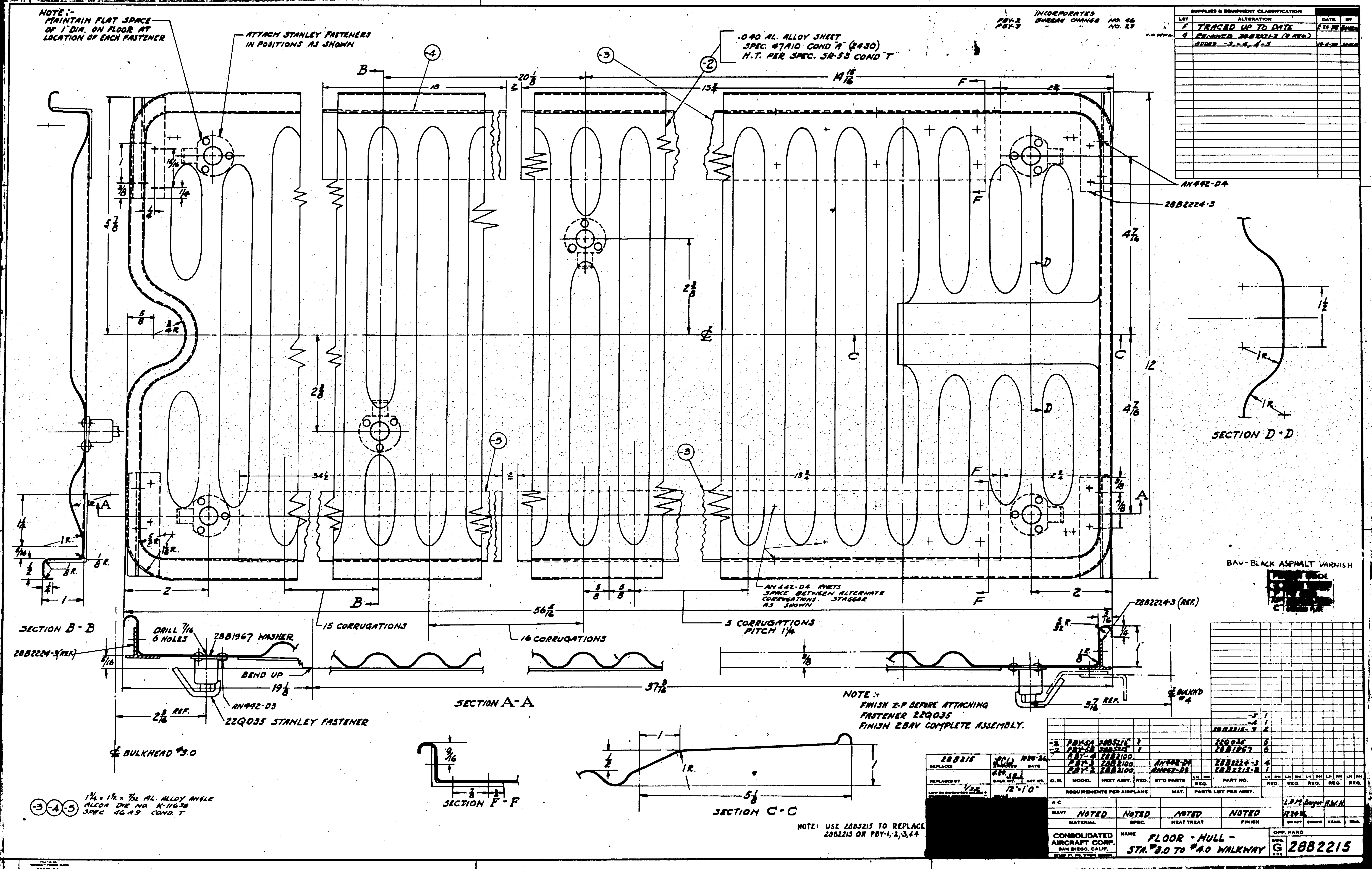
NOTE:- MAINTAIN FLAT SPACE OF 1" DIA. ON FLOOR AT LOCATION OF EACH FASTENER
ATTACH STANLEY FASTENERS IN POSITIONS AS SHOWN
.040 AL. ALLOY SHEET SPEC. 47A10 COND "A" (24SO) H.T. PER SPEC. SR-53 COND "T"
PBY-2 PBY-3 INCORPORATES BUREAU CHANGE NO. 46 NO. 23
SUPPLIES & EQUIPMENT CLASSIFICATION
LET | ALTERATION | DATE | BY
F | TRACED UP TO DATE | 2-24-38
G | REMOVED 28B2221-3 (2 REQ.) ADDED -3, -4, & -5
AN442-D4
28B2224-3
SECTION D-D
AN442-D4 RIVETS SPACE BETWEEN ALTERNATE CORRUGATIONS. STAGGER AS SHOWN
15 CORRUGATIONS
16 CORRUGATIONS
5 CORRUGATIONS PITCH 1¼
SECTION B-B
28B2224-3(REF.)
DRILL 7/16 6 HOLES
28B1967 WASHER
BEND UP
AN442-D3
22Q035 STANLEY FASTENER
SECTION A-A
28B2224-3 (REF.)
℄ BULKHEAD #3.0
℄ BULKHD #4
SECTION F-F
SECTION C-C
1¾ x 1½ x 3/32 AL. ALLOY ANGLE ALCOA DIE NO. K-11638 SPEC. 46A9 COND. T (-3)(-4)(-5)
NOTE:- FINISH Z-P BEFORE ATTACHING FASTENER 22Q035 FINISH 2BAV COMPLETE ASSEMBLY.
BAU-BLACK ASPHALT VARNISH
[redacted]
NOTE: USE 28B5215 TO REPLACE 28B2215 ON PBY-1,-2,-3,&4
-5 1
-4 1
28B2215-3 2
-2 PBY-5A 28B5215 1 | 22Q035 6
-2 PBY-5B 28B5215 1 | 28B1967 6
PBY-4 28B2100
PBY-3 28B2100 | AN442-D4 | 28B2224-3 4
PBY-2 28B2100 | AN442-D3 | 28B2215-2 1
O.H. | MODEL | NEXT ASSY. | REQ. | STD PARTS | LH RH REQ. | PART NO. | LH RH REQ.
REQUIREMENTS PER AIRPLANE | MAT. | PARTS LIST PER ASSY.
28B216 REPLACES
REPLACED BY
LIMIT ON DIMENSIONS UNLESS OTHERWISE SPECIFIED ± 1/32
APPROVED DATE 12-20-36
CALC. WT. ACT. WT.
SCALE 12"=1'0"
[redacted]
AC
NAVY NOTED MATERIAL | NOTED SPEC. | NOTED HEAT TREAT | NOTED FINISH
DRAFT CHECK EXAM. ENG.
CONSOLIDATED AIRCRAFT CORP. SAN DIEGO, CALIF.
NAME FLOOR - HULL - STA. #3.0 TO #4.0 WALKWAY
OPP. HAND
DWG. SIZE G 28B2215

SUPPLIES & EQUIPMENT CLASSIFICATION			
LET	ALTERATION	DATE	BY
Q	TRACED	2-27-39	[illegible]
F	ADDED -4-5-6-7-8 & 9 TO FACE OF DWG & B.M., TO MAKE -50 ASSY FOR XPBY-5	3-22-39	[illegible]
6	DIMS. 71¼ & 54⅝ SECT. D-D, WHERE 71⅞ & 54½ DIM. 2⅝ (2) PLAN VIEW, WAS 2¾ (2) W.T. CHG. NEG.	12-7-42	[illegible]

C.O. 10299A
S.O. A36948

3 7/16 (REF.)
℄ BULKHEAD #4
1" DIA. FLAT AT EACH FASTENER POSITION
2
21 11/16
27
B
5 7/8
4 7/16
E
2 1/16 (G)
℄ KEEL
C
1/4
1R.
D
1/8 R.
5/8 R.
1

SECTION B-B

5/32 R.
1/4 PITCH
5/8
54 1/16 (6)
B

SECTION D-D

2
-2 .040 AL. ALLOY SHEET SPEC. 47A10 COND 'A' (2450) H.T. PER SPEC. SR-53 COND 'T'
4 7/16
4 1/2
12
E
A
1 5/8
5/8 R.
28B2224-3
AN442-D4
DRILL 7/16 6 HOLES
AN442-D3
28B1967 COTTON MBBC WASHERS
12 1/2 REF.
22Q035 STANLEY FASTENERS
3 3/4
28 (REF.)
℄ BULKHEAD #5.0
71 1/4 (6)

STA° 4
-50 ASSY. (NEW FLOOR)
SEE VIEW-H
SEE VIEW-I
1 7/16
27 13/16
OLD FLOOR
71 11/16
VIEW SHOWING METHOD OF REWORKING 28B2216 TO MAKE -50 ASSY
SCALE 1"=1'0"

NOTCH FLANGE & CLOSE AS SHOWN TO REMOVE BEND
AN442-D4 -10 RIVETS ON EACH SIDE OF FLOOR
Q4305-D4
2 1/4
VIEW - I.

-7 .030 ALAL SHT SPEC. 47A10 COND 'A' (2450) H.T. SR53 COND 'T'
-6 .080 X 1 X 1¼ EXT. L DIE #11820 SPEC. 4649 'T'

TYPICAL SEC. OF H & I

-8 RH
-9 RH .030 AL. AL. SHT. (2450) SPEC. 47A10 COND 'A' H.T. SR-53 COND. 'T'
Q4305-D4
1 1/8
28B2224-3 (REF.)
NOTCH FLANGES ONLY
VIEW - H
AN442-D4 12 RIVETS ON EACH SIDE OF FLOOR
-4
-5 RH .080 X 1 X 1¼ EXT. L DIE #11820 SPEC. 4649 'T'

1 1/2
1R.
SECTION E-E

1
1/2
1R
5 1/8
SECTION C-C

FWD
STANLEY FASTENER (REF.)
28B2271-3
F
11
3
8 1/8
12
21 1/8 (REF.)
LOCATE ON ℄ CORRUG NEAREST TO DIM. GIVEN.

1
1/2
1R
4 1/8
3 1/2
SECTION A-A

1 3/8
G
2 3/8
7/8
VIEW AT F

AN 442-D4
9/16
SECTION G-G

NOTE :-
FINISH Z-P BEFORE ATTACHING FASTENERS 22Q035 2ND COMPLETE ASSY.

NOTE: USE 285216 TO REPLACE 28B2216 ON PBY-4,5,6 & PB-2A

FINISH CODE	
Z	ANODIC TREATMENT
P	P-27 PRIMER
AP	ALUMINIZED PAINT
C	CADMIUM PLATE

| | | |

LET	ALTERATION	DATE	
E	TRACED	2-15-38	
F	ADDED 1½ DIM. FOR 5/8 R.	6-23-38	

SUPPLIES & EQUIPMENT CLASSIFICATION

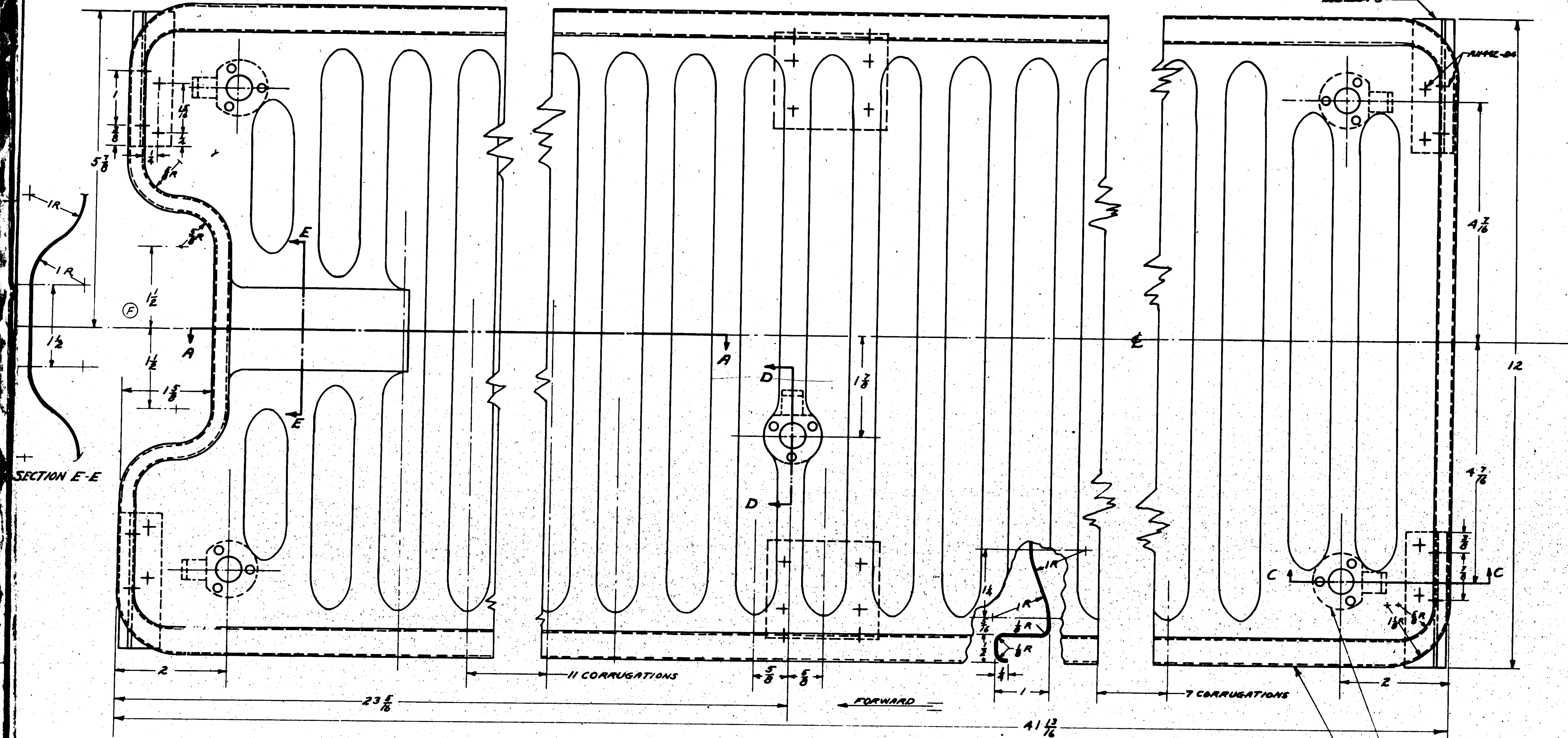

MAINTAIN FLAT SPACE OF 1" DIA. AT EACH FASTENER LOCATION

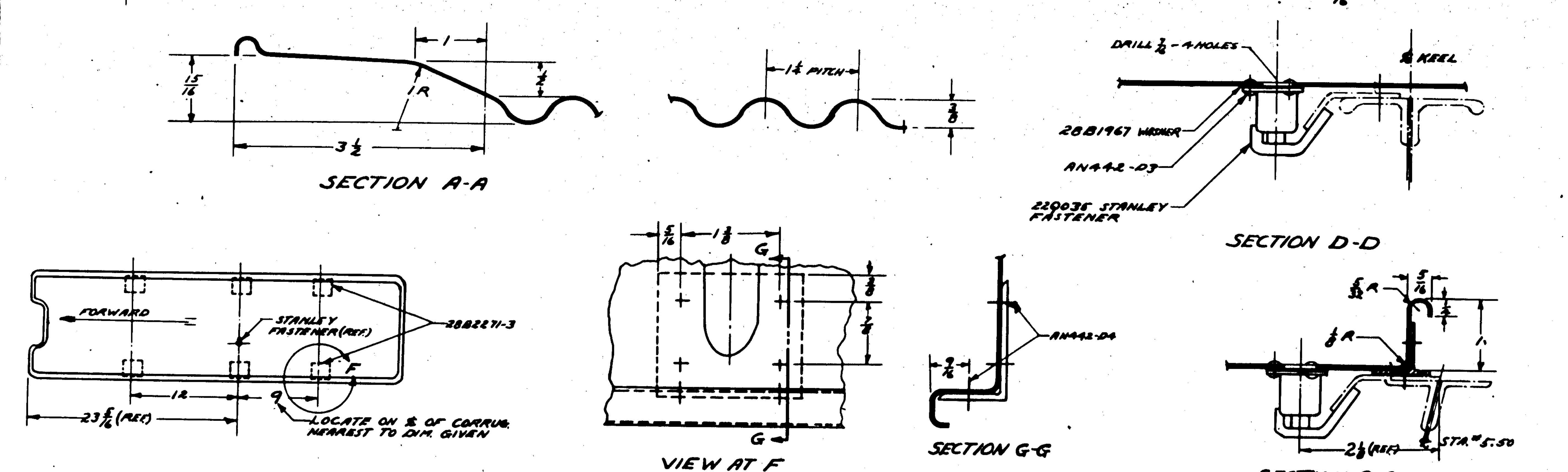

MATERIAL:-
.040 AL. ALLOY SH'T. SPEC. 47A10
COND. 'A' (24SO)
H.T. SR53 (COND. T)
-2

FINISH:-
Z-P BEFORE ATTACHING FASTENERS 220035.
2 [redacted] COMPLETE ASSEMBLY.
GP

GP-GREEN PRIME
FINISH CODE
Z [redacted]
P [redacted]
AP [redacted]
C [redacted]

O. H.	MODEL	NEXT ASSY.	REQ.	ST'D PARTS	LH / RH REQ.	PART NO.	REQ.
						AN442-D4	
						AN442-D3	
-2	PBY-5A	28B5217	1			220035	5
-2	PBY-5B	28B5217	1			28B2271-3	6
	PBY-4	28B2100				28B2229-3	4
	PBY-3	28B2100				28B1967	5
	PBY-2	28B2100				28B2217-2	1

REQUIREMENTS PER AIRPLANE | MAT. | PARTS LIST PER ASSY.

A C				LDM / EY / MWH
NAVY NOTED	NOTED	NOTED	NOTED	2-23-36 B.O.I.
MATERIAL	SPEC.	HEAT TREAT	FINISH	DRAFT / CHECK / EXAM. / ENG.

28B217 REPLACES
12-18-38 APPROVED DATE
REPLACED BY
244 CALC. WT. | ACT. WT.
12" = 1'-0" SCALE

[redacted]

CONSOLIDATED AIRCRAFT CORP.
SAN DIEGO, CALIF.

NAME: FLOOR - HULL - STA. #5 TO #5.50 WALKWAY

OPP. HAND

DWG. G 28B2217

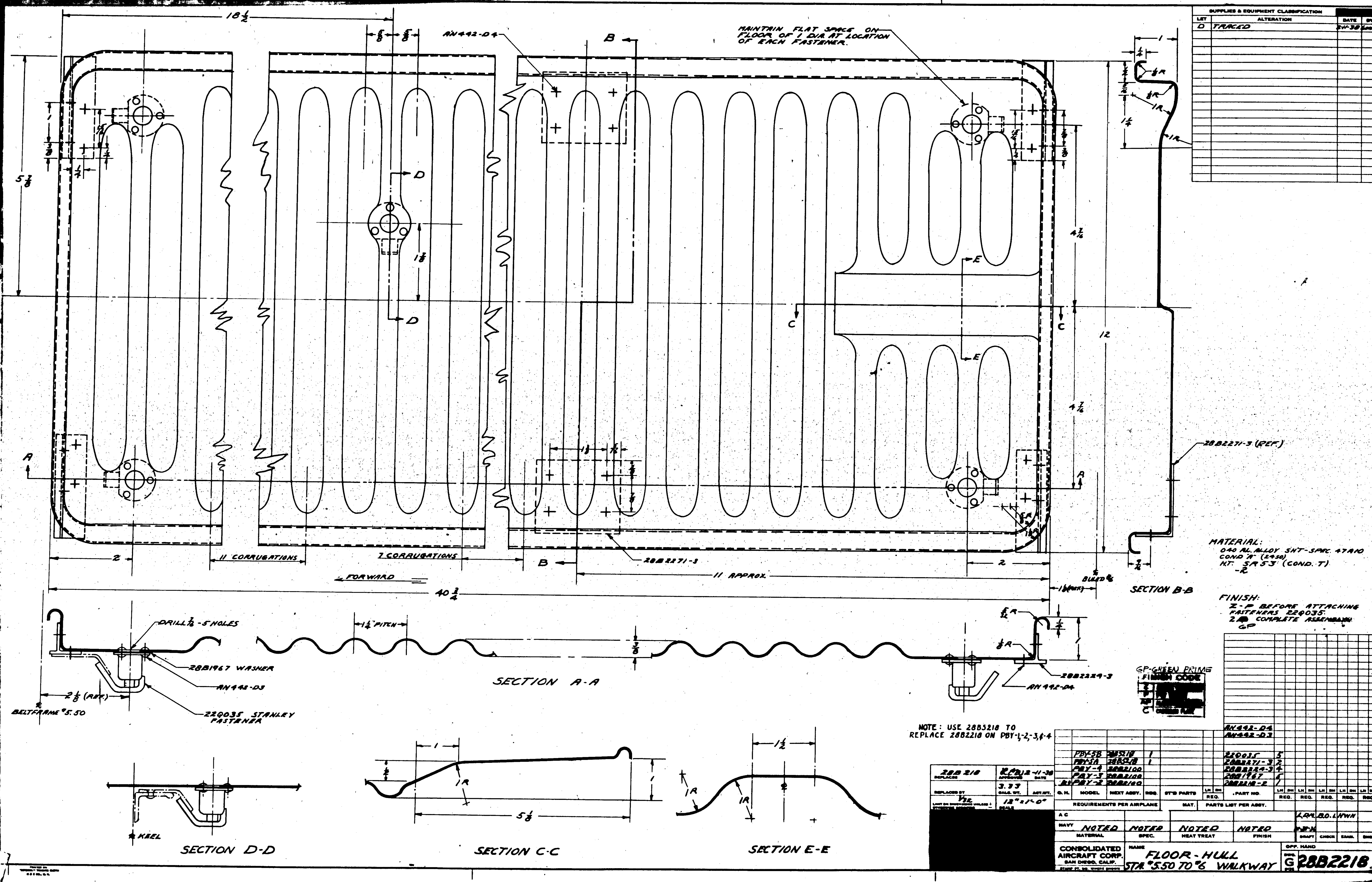
SUPPLIES & EQUIPMENT CLASSIFICATION
LET | ALTERATION | DATE | BY
D TRACED
MAINTAIN FLAT SPACE ON FLOOR OF 1 DIA AT LOCATION OF EACH FASTENER.
AN442-D4
18 1/2
5 7/8
1 7/8
11 CORRUGATIONS
7 CORRUGATIONS
FORWARD
40 3/4
28B2271-3
11 APPROX.
28B2271-3 (REF.)
4 7/16
12
SECTION B-B
MATERIAL:
040 AL. ALLOY SHT-SPEC. 47A10
COND "A" (24SO)
HT. SR53 (COND. T)
-2
FINISH:
Z-P BEFORE ATTACHING FASTENERS 22Q035.
2 COMPLETE ASSEMBLY
GP
DRILL 7/16 - 5 HOLES
1 1/4" PITCH
28B1967 WASHER
AN442-D3
22Q035 STANLEY FASTENER
2 1/8 (REF.)
℄ BELTFRAME #5.50
SECTION A-A
28B2224-3
AN442-D4
GP-GREEN PRIME
FINISH CODE
SECTION D-D
℄ KEEL
SECTION C-C
SECTION E-E
NOTE: USE 28B5218 TO REPLACE 28B2218 ON PBY-1,-2,-3,&-4
PBY-5B 28B5218 1
PBY-5A 28B5218 1
PBY-4 28B2100
PBY-3 28B2100
PBY-2 28B2100
AN442-D4
AN442-D3
22Q035 5
28B2271-3 2
28B2224-3 4
28B1967 5
28B2218-2 1
REQUIREMENTS PER AIRPLANE
PARTS LIST PER ASSY.
28B218 REPLACES
12-11-38 DATE
3.33 CALC. WT.
12" = 1'-0" SCALE
NOTED MATERIAL
NOTED SPEC.
NOTED HEAT TREAT
NOTED FINISH
CONSOLIDATED AIRCRAFT CORP. SAN DIEGO, CALIF.
FLOOR-HULL STA. #5.50 TO #6 WALKWAY
G 28B2218

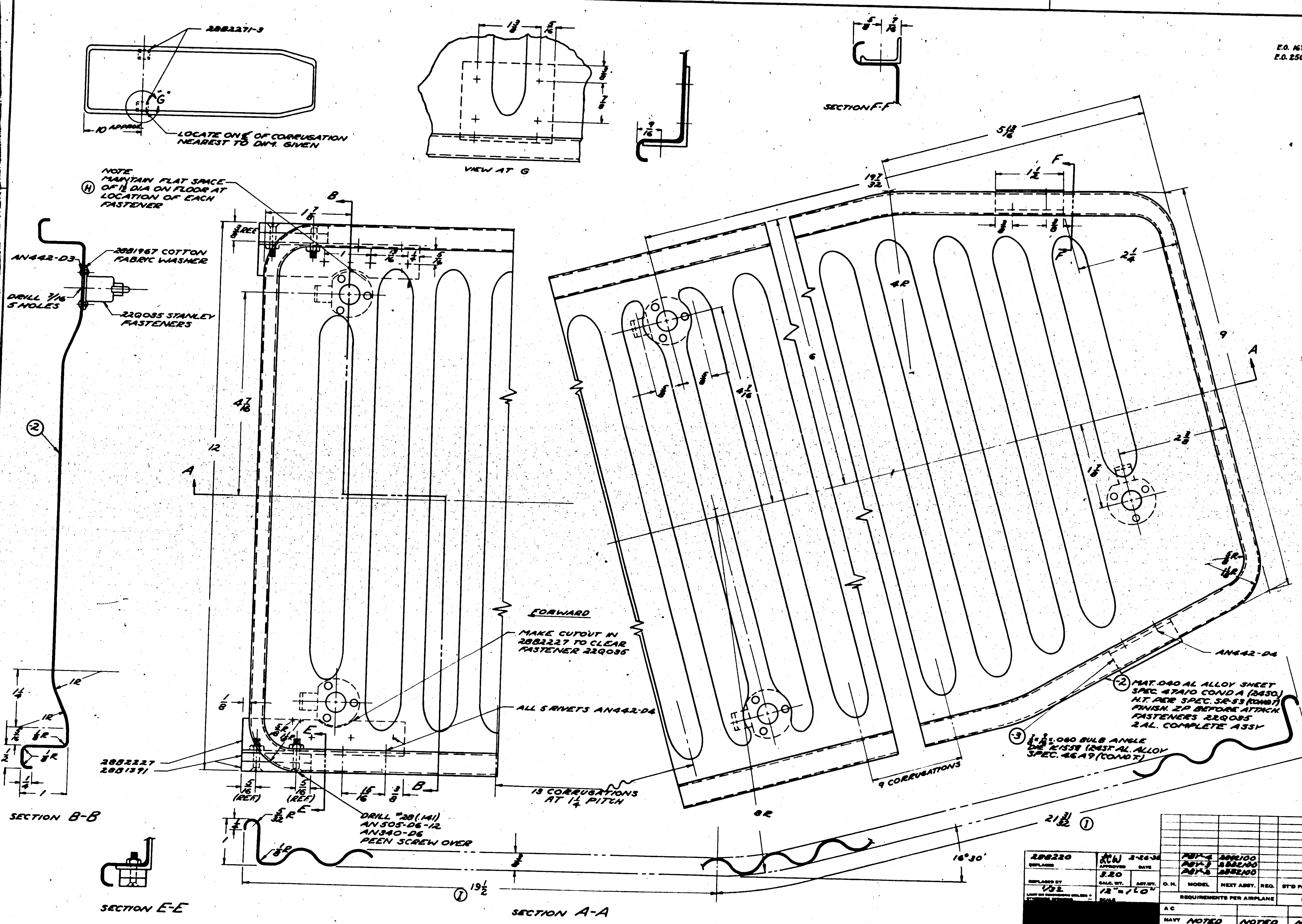

E.O. 16384
E.O. 25070A

SUPPLIES & EQUIPMENT CLASSIFICATION

LET	ALTERATION	DATE	BY
G	TRACED TO DATE	2-26-36	[illegible]
H	CHANGED FROM 1" TO 1½"	10-30-40	[illegible]
I	WAS 20 CHANGED TO 19½	10-30-40	[illegible]
I	WAS 21 CHANGED TO 21	10-30-40	[illegible]

PART NO.	REQ.
AN340-D6	4
AN505-D6-12	4
AN442-D4	
AN442-D3	
2882271-3	2
288[illegible]	4
2882227	2
22Q035	5
2881967	5
2882220-3	2
2882220-2	1

MODEL	NEXT ASSY.
ASY-4	2882100
ASY-3	2882100
ASY-2	2882100

REQUIREMENTS PER AIRPLANE — MAT. — PARTS LIST PER ASSY.

288220 REPLACES — LCW APPROVED 2-26-36 DATE — REPLACED BY — 3.20 CALC. WT. — ACT. WT. — 1/32 LIMIT ON DIMENSIONS UNLESS OTHERWISE SPECIFIED — 12" = 1'0" SCALE

	MATERIAL	SPEC.	HEAT TREAT	FINISH
NAVY	NOTED	NOTED	NOTED	NOTED

DRAFT — CHECK — EXAM. — ENG.

CONSOLIDATED AIRCRAFT CORP.
SAN DIEGO, CALIF.

NAME: FLOOR-HULL STATION 6.60 TO 7 WALKWAY

OPP. HAND

DWG. G 28822[illegible]

SUPPLIES & EQUIPMENT CLASSIFICATION			
LET	ALTERATION	DATE	BY
B	TRACED	7-7-38	[redacted]

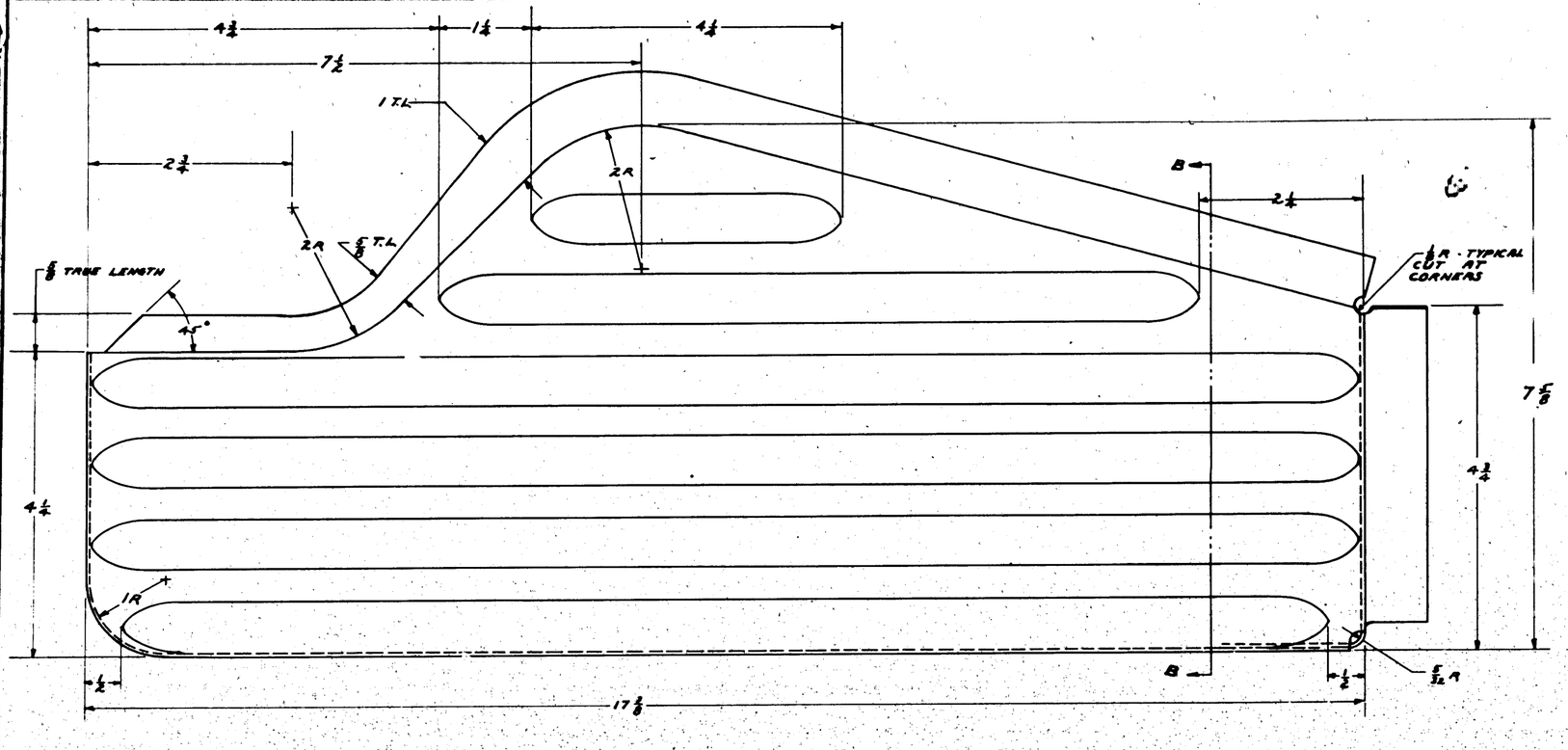

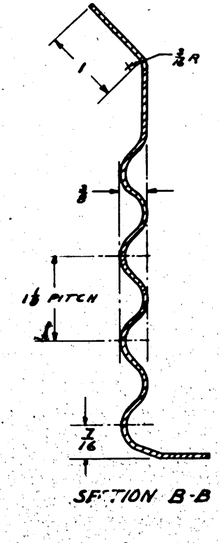

SECTION B-B

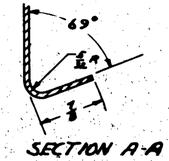

SECTION A-A

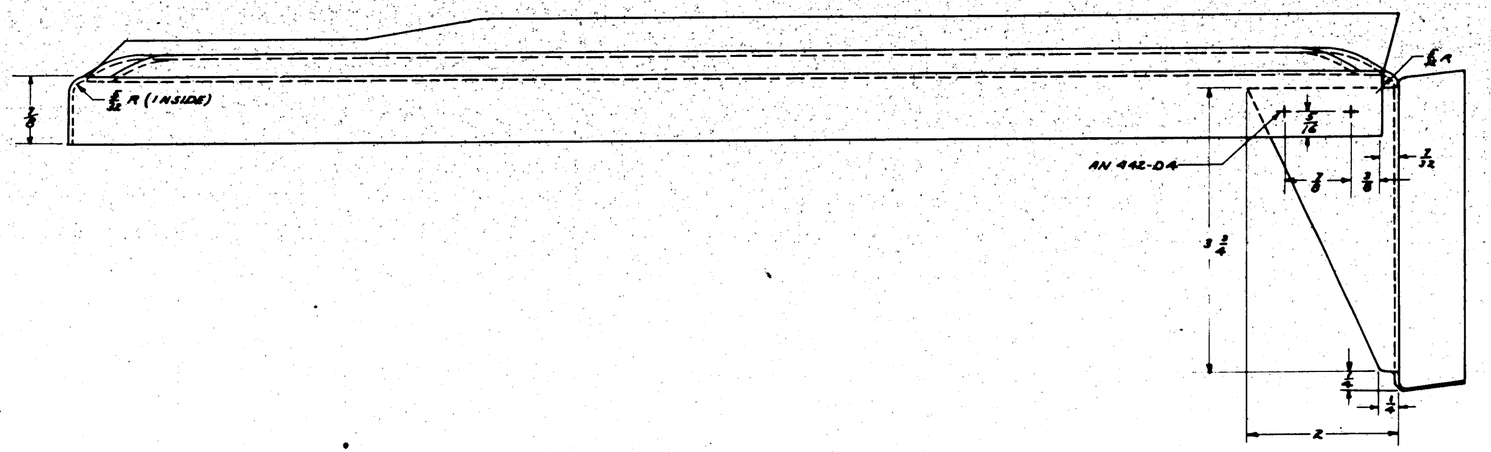

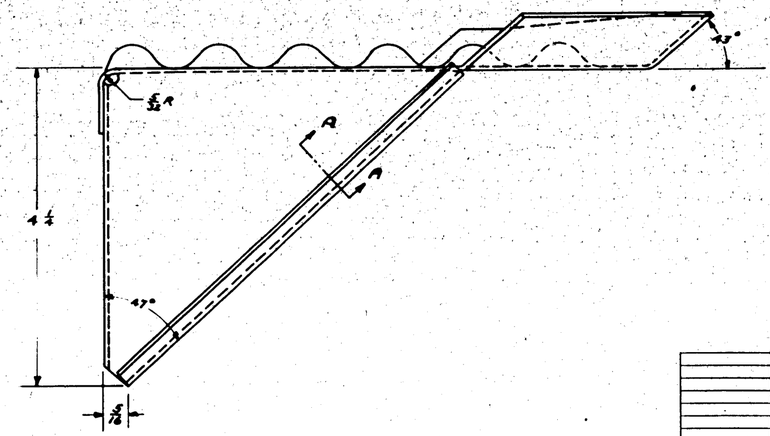

SP. GREEN PRIME FINISH CODE

Z	[redacted]		
W			
A			
C			

-R	PBY-5A&B	28B5100	1EA																				
-L	PBY-5A&B	28B5100	1EA																				
-1	PBY-5	28B5100																					
	PBY-5	28B5100																					
-1	PBY-4	28B2100																					
	PBY-4	28B2100																					
-1	PBY-3	28B2100																					
	PBY-3	28B2100																					
-1	PBY-2	28B2100																					
	PBY-2	28B2100																	AN442-D4				
O. H.	MODEL	NEXT ASSY.	REQ.	ST'D PARTS	LH	RH	PART NO.	LH	RH	LH	RH	LH	RH	LH	RH								
	REQUIREMENTS PER AIRPLANE			MAT.	PARTS LIST PER ASSY.			REQ.		REQ.		REQ.		REQ.									

REPLACES		APPROVED	DATE																				
REPLACED BY		CALC. WT.	ACT. WT.																				
LIGHT ON SHEETMETAL PARTS ONLY		12" = 1'-0"																					

C																							
NAVY AS'T. AL. ALLOY SHEET	67S10 Comm. A. (Alclad)	SR 53 (Comm.T)	Z-P-2 [redacted]																				
MATERIAL	SPEC.	HEAT TREAT	FINISH																				

RT. A	BAL	MWH.																					
7-6-38																							
DRAFT	CHECK	ENGR.	ENGR.																				

CONSOLIDATED AIRCRAFT CORP. SAN DIEGO, CALIF.

NAME: STEP - HULL FRONT GUNNER'S

OPP. HAND 28B2222-1

SIZE G

28B2222

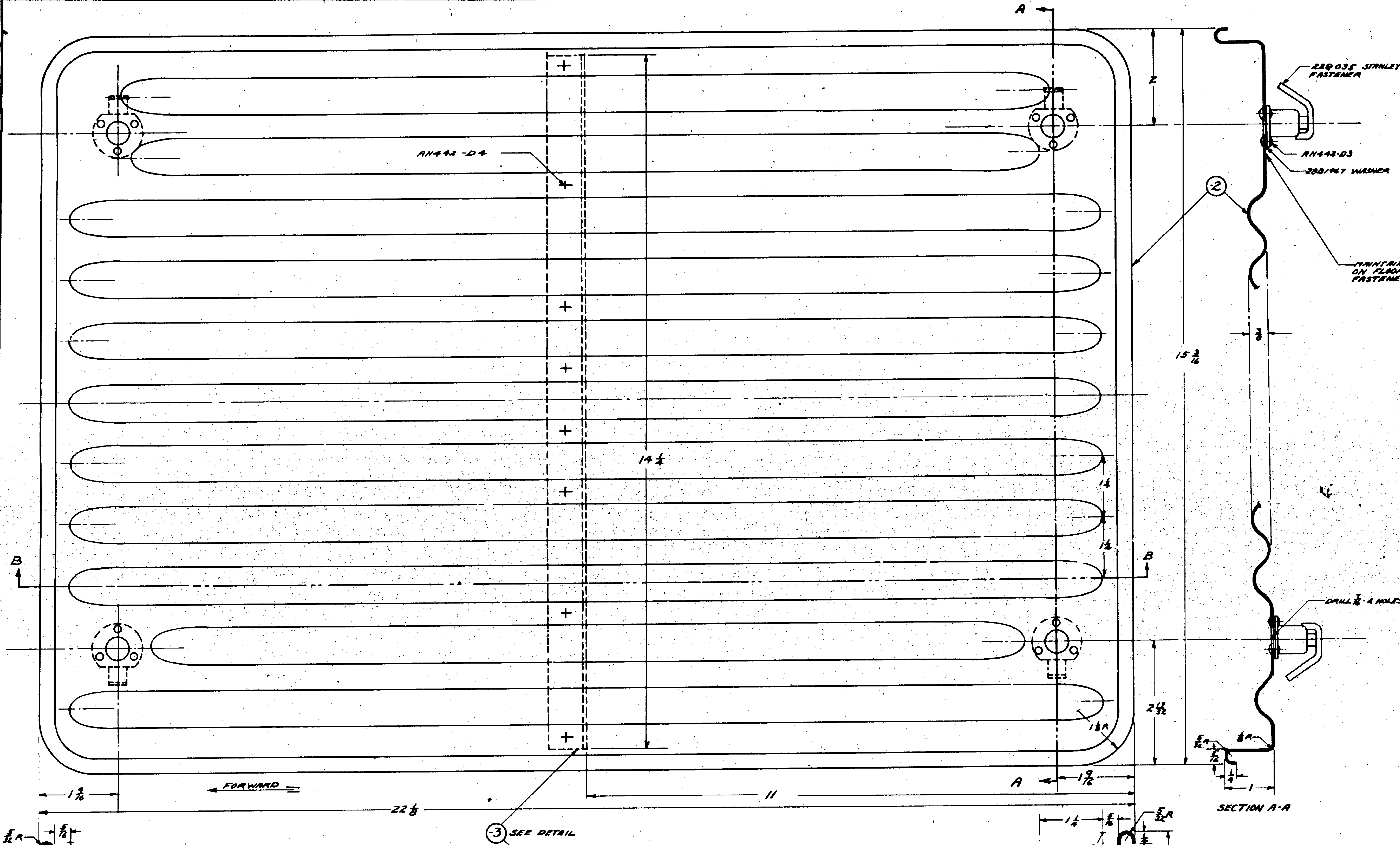

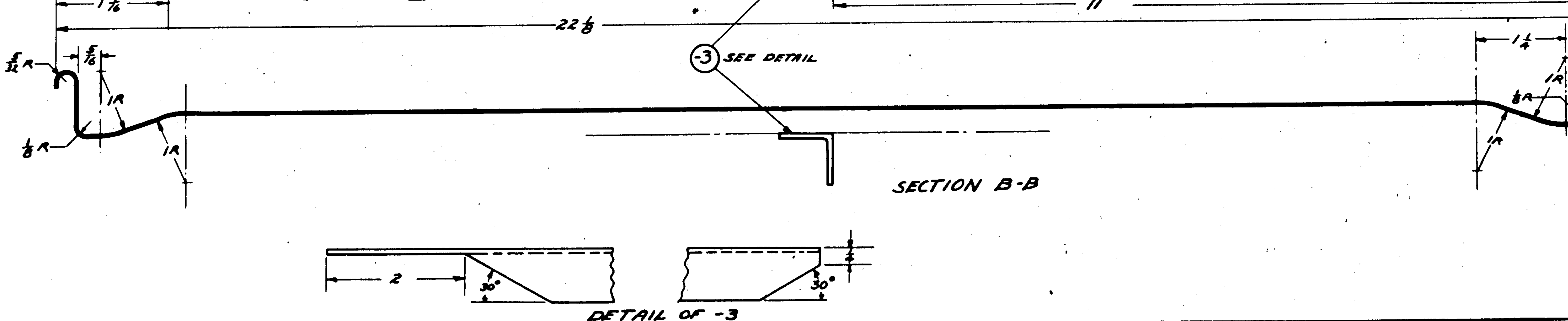

MATERIAL:
.040 AL. ALLOY SHT. SPEC. 47A10 COND. "A" (24SO) H.T. SR53 (COND. T)
-2

3/4 x 3/4 x 1/16 PLAIN ANGLE. DIE #5401 SPEC. 46A9 COND. "T" AL. ALLOY (24ST)
-3

FINISH:
Z-P BEFORE ATTACHING FASTENERS 220035.
Z AL COMPLETE ASSEMBLY.

SUPPLIES & EQUIPMENT CLASSIFICATION			
LET	ALTERATION	DATE	BY
D	TRACED	2-11-38	

O. H.	MODEL	NEXT ASSY.	REQ.	ST'D PARTS	LH REQ.	RH REQ.	PART NO.	REQ.
							AN442-D4	
							AN442-D3	
							220035	4
							28B1967	4
	PBY-4	28B249					-3	1
	PBY-3	28B249					28B2225-2	1
	PBY-2	28B249						
REQUIREMENTS PER AIRPLANE				MAT.	PARTS LIST PER ASSY.			

REPLACES	28B225
APPROVED / DATE	2-11-38
REPLACED BY	
CALC. WT.	2.36
ACT. WT.	
LIGHT ON DIMENSIONS UNLESS OTHERWISE NOTED	V32 ±
SCALE	12" = 1'-0"

[redacted]

A C				
NAVY NOTED	NOTED	NOTED	NOTED	V.L.B. / 2-15-37 — DRAFT; B.D.I. — CHECK; W.W.M. — ENGR.
MATERIAL	SPEC.	HEAT TREAT	FINISH	

CONSOLIDATED AIRCRAFT CORP.
SAN DIEGO, CALIF.

NAME FLOOR - HULL NAVIGATOR'S

OPP. HAND

DWG. G 28B2225

SUPPLIES & EQUIPMENT CLASSIFICATION			
LET	ALTERATION	DATE	BY
C	TRACED	8-9-38	
D	REMOVED 28B1967 FROM BOM & FACE. NOTE ADDED:- "ANCHOR NUTS, ETC.	7-8-41	
E	ON FACE F 13/16 CHG 28B2727 TO 28B2227-6 & 26. REMVD NOTE "MAKE ---- 22Q035"	8-30-42	Stone
	NO WT. CHG		
F	ON FACE OF ONB REPLACED NOTE PAR -- 2" MAKE FROM .032 2.5 X 1 3/4 PLAIN ANGLE DIE 2" 11B20, SPEC. 4648 COND. T (24ST) WITH "MAKE FROM .032 2.5 X 2 1/2 ZOST ALCLAD, SPEC. QQ-A-362-T. TO SEC 6B ADDED 11/12. 1 1/4 DIA. & 3/16 R.B. (WT. CHG. NEG.)	9-22-43	WRIGHT

B.O. 6432

EDA 9557

SECTION F-F

SECTION A-A

SECTION E-E

SECTION B-B

SECTION C-C

SECTION D-D

SECTION G-G

NOTE: ANCHOR NUTS & STANLEY FASTENERS ARE TO BE FINISHED AS PER SPEC. PSF-28-006, 102.28. SPEC. ZP-28-006 102.28 ANCHOR NUTS (STEEL) & STANLEY FASTENERS. APPLY 1 BRUSH COAT OF ZINC CHROMATE PRIMER TO THE CONTACTING SURFACES OF NUT OR FASTENER. APPLY 2 COATS OF PRIMER TO SUPPORTING SURFACE. ASSEMBLE WITH ZINC CHROMATE PASTE IN THE JOINT SUCH THAT EXCESS MATERIAL IS SQUEEZED OUT AT ALL BOUNDARIES. REMOVE EXCESS MATERIAL IN SUCH A MANNER AS TO FORM A FILLET.

NOTE:- FINISH Z-P BEFORE ATTACHING FASTENERS 22Q035 2GP COMPLETE ASSEMBLY.

| | | |

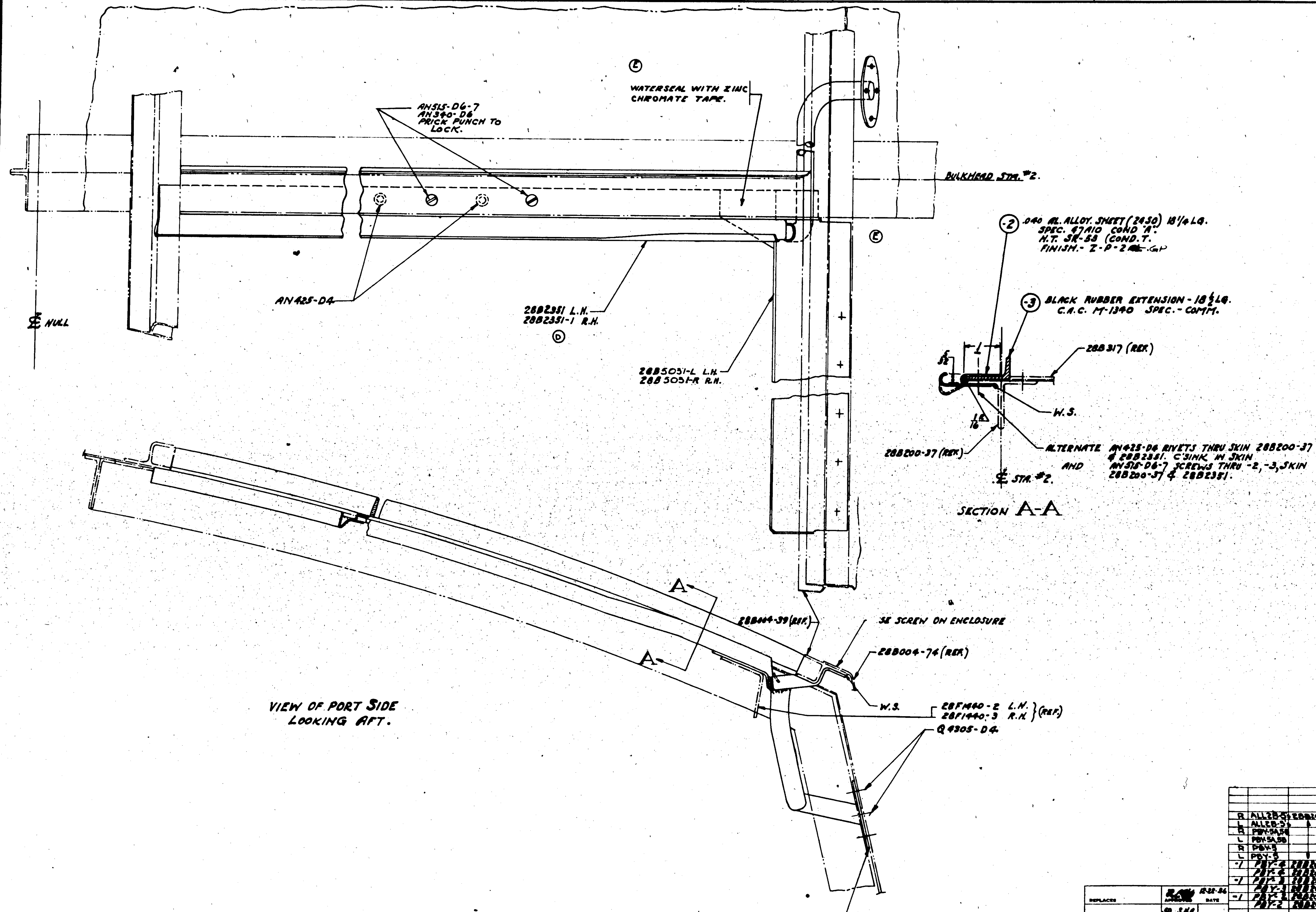

SUPPLIES & EQUIPMENT CLASSIFICATION

	LET	ALTERATION	DATE	BY
	C	TRACED	9-7-38	[illegible]
E.C. A21923	D	REMOVED 28B2352-L/R. ADDED 28B5031-L/R.	4-24-42	[illegible]
E.O. M8778	E	ADDED NOTE "WATERSEAL --- TAPE" & EXTENDED TAB - NEG. WT. CHG.	8-6-42	[illegible]

SP-GREEN PRIME
FINISH CODE

Z	ANODIC TREATMENT
P	P-27 PRIMER
AP	ALUMINIZED PRIMER
C	CADMIUM PLATE

O. H.	MODEL	NEXT ASSY.	REQ.	STD PARTS	LH REQ.	RH REQ.	PART NO.	LH REQ.	RH REQ.
R	ALL28-5	28B2024	1						
L	ALL28-5		1						
R	PBY-5A,5B		1						
L	PBY-5A,5B		1						
R	PBY-5		1						
L	PBY-5		1				28B5031-R		1
-1	PBY-4	28B2024					28B5031-L	1	
	PBY-4	28B2024					28B2351-1		1
-1	PBY-3	28B2024					28B2351	1	
	PBY-3	28B2024							
-1	PBY-2	28B2024		AN340-D6	8	8	-3	1	1
	PBY-2	28B2024		AN515-D6-7	8	8	28B2350-2	1	1

REQUIREMENTS PER AIRPLANE | MAT. | PARTS LIST PER ASSY.

REPLACES	APPROVED [illegible]	DATE 12-22-36
REPLACED BY	CALC. WT. .50 S.H.A.	ACT. WT.
LIMIT ON DIMENSIONS UNLESS NOTED ± 1/64	12"=1'0"	

[redacted]

AC							
NAVY NOTED	NOTED	NONE	NOTED	S.H.A. 12-22-36		H.W.H.	
MATERIAL	SPEC.	HEAT TREAT	FINISH	DRAFT	CHECK	EXAM.	ENG.

CONSOLIDATED AIRCRAFT CORP.
SAN DIEGO, CALIF.

NAME DRAIN INSTALL.- HULL - PILOTS HATCH

OPP. HAND 28B2350-1

DWG. G 28B2350

E.O.18041A
ALL 28-536 PBY5 E.O.39339

SUPPLIES & EQUIPMENT CLASSIFICATION			
LET	ALTERATION	DATE	BY
A	TRACED	[illegible]	[illegible]
B	CHANGED 3/16 DIM. TO 1/4	[illegible]	[illegible]
C	CHANGE 12 3/16 DIM TO 12 11/16	[illegible]	[illegible]

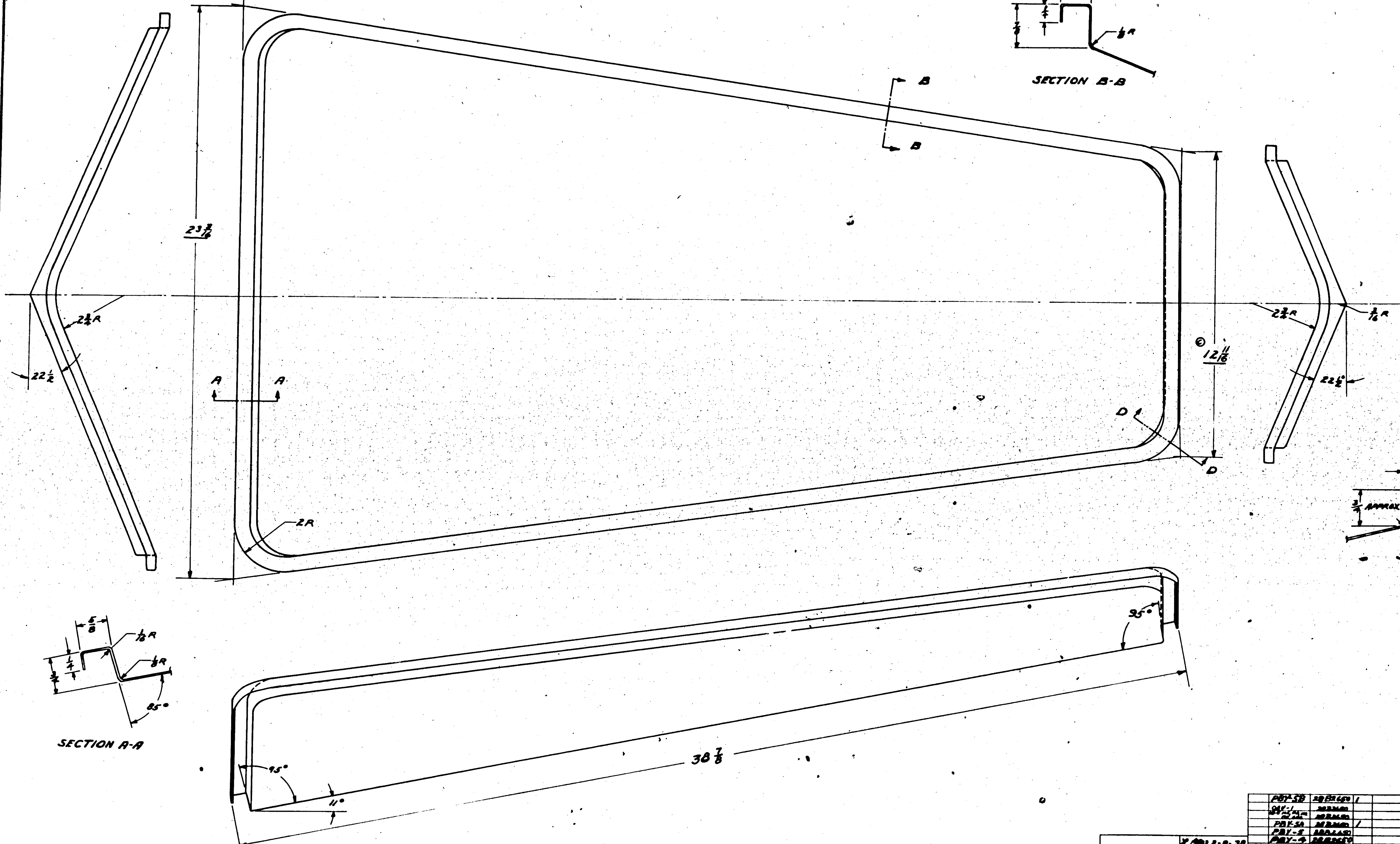

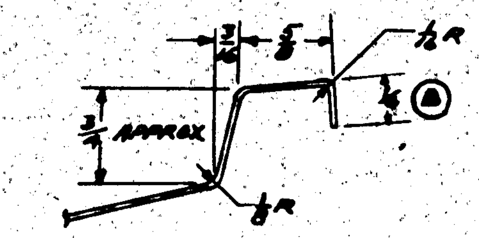

FINISH CODE
Z [redacted]
P [redacted]
AP [redacted]
C [redacted]

PBY-5B	28B2650	1	
OA-1	28B2650		
	28B2650		
PBY-5A	28B2650	1	
PBY-5	28B2650		
PBY-4	28B2650		
PBY-3	28B2650		
PBY-2	28B2650		
MODEL	NEXT ASSY.	REQ.	STD PARTS

REQUIREMENTS PER AIRPLANE | MAT. | PARTS LIST PER ASSY.

REPLACES	X [illegible] 2-8-38 (APPROVED / DATE)
REPLACED BY	4.18 (CALC. WT.) / ACT. WT.
1/16	6" = 1'-0" (SCALE)

[redacted]

MATERIAL	SPEC.	HEAT TREAT	FINISH
NAVY [illegible] SHT (24 SO)	47A10 COND'A	SR53 (COND T)	Z-P

DRAFT: SMITH 2-10-37 CHECK: B.O.C. EXAM: K.W.H.

CONSOLIDATED AIRCRAFT CORP.
SAN DIEGO, CALIF.

NAME: STAMPING - HULL - TUNNEL GUN DOOR

OPP. HAND

DWG. G 28B2665

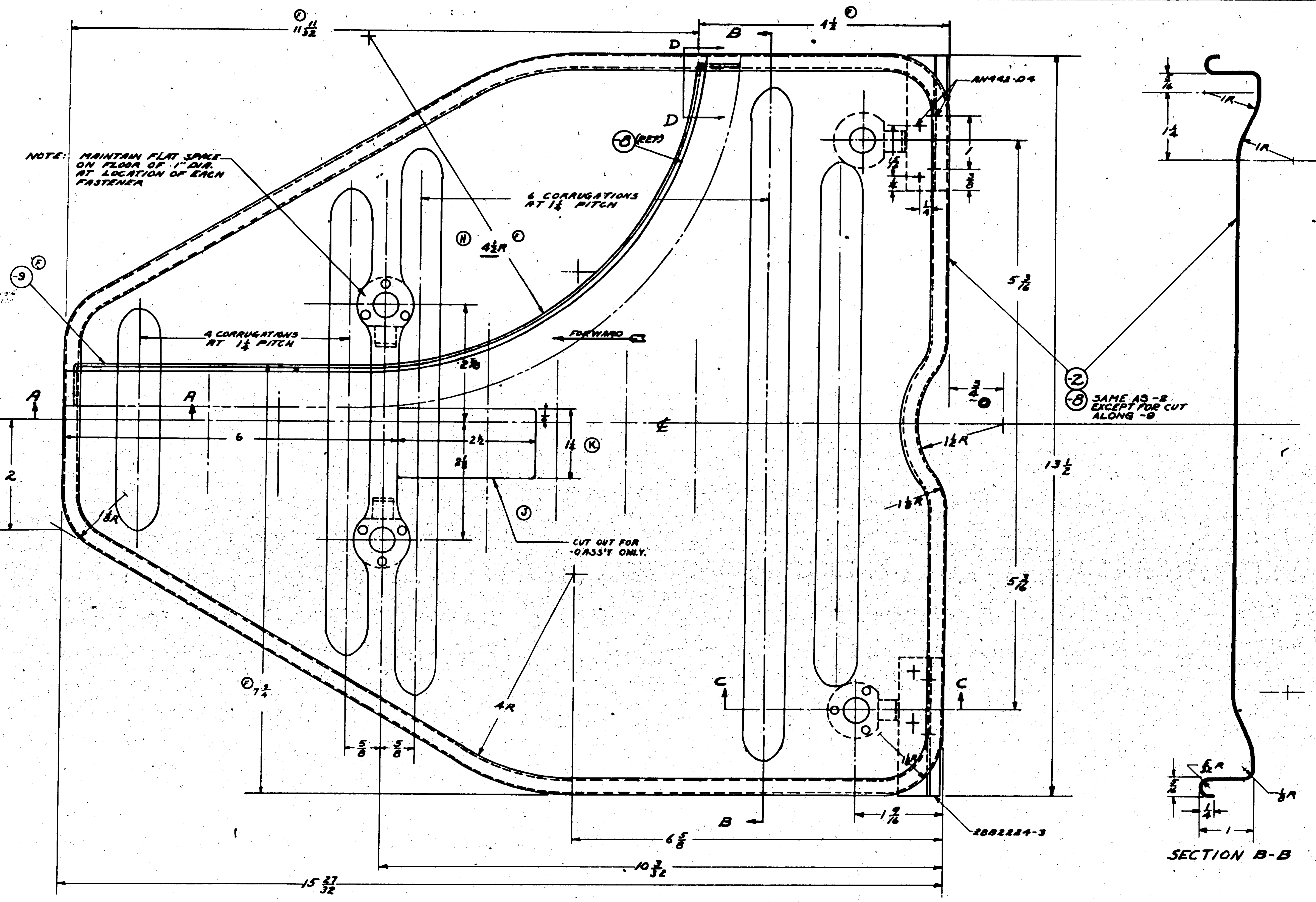

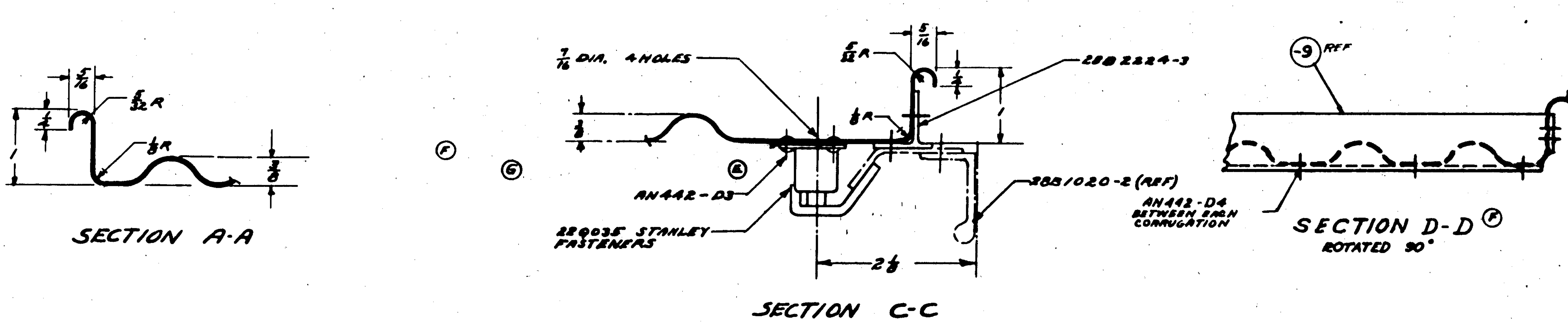

SUPPLIES & EQUIPMENT CLASSIFICATION

	LET	ALTERATION	DATE	BY
	C	TRACED		
	D	1/2 DIM WAS 1"		
E.O. A6482	E	REMOVED 28B1967 FROM PAGE & 9/M. ADDED NOTE TO FACE. BROUGHT REQ. BLOCK UP TO DATE	7-9-41	
E.O. A14332	F	... -3 ASSY FOR 28 ... ADDED -9 ... DIM 4 1/2, 7 3/4 & 6 7/8. ADDED SEC. D-D. CHGD WT. FROM ... TO ...		
	G	REMOVED 28B1967. WT. CHG. NEG.	10-15-41	
E.O. A446484	H	DIM. 4 1/2 R. WAS 6 R. WT. CHG. NEG.	7-11-42	
E.O. A45542	J	CUTOUT ADDED TO -0 ASS'Y. 6, 2 1/2, 1 1/2, 1/2 DIMS. ADDED. WT. CHG. NEG.	7-11-42	
	K	CHANGED 1 1/4 DIMS. TO TOP OF CUTOUT, WAS TO ℄ OF PART. WT. CHG. NEG.		

Ⓔ NOTE:
ANCHOR NUTS & STANLEY FASTENERS ARE TO BE FINISHED AS PER SPEC. ZF-28-006 #102.28
SPEC. ZF-28-006 #102.28:
ANCHOR NUTS (STEEL) & STANLEY FASTENERS. APPLY 1 BRUSH COAT OF ZINC CHROMATE PRIMER TO THE CONTACTING SURFACES OF THE NUT OR FASTENER. APPLY 2 COATS OF PRIMER TO THE SUPPORTING SURFACE. ASSEMBLE WITH ZINC CHROMATE PASTE IN THE JOINT SUCH THAT EXCESS MATERIAL IS SQUEEZED OUT AT ALL BOUNDARIES. REMOVE THE EXCESS MATERIAL IN SUCH A MANNER AS TO FORM A FILLET.

MATERIAL:
.040 AL. ALLOY SHT. SPEC. 47A10 COND. A (2950) - H.T. SR53 (COND. T) -2 & -8
Ⓕ -9 K5401 X18 AL ALLOY 46A9-T

FINISH:
Z-P BEFORE ATTACHING FASTENERS 22Q035. 2-AL COMPLETE ASSEMBLY.

FINISH CO...
Z
P
C

SHIPS #1 TO 24
SHIPS #1 TO #11
SHIPS #256 ON

O.H.	MODEL	NEXT ASSY.	REQ.	STD PARTS	LH	RH	PART NO.	REQ.	REQ.
	PBY-5	28B2100	1						
	28-5MR	28B2100	1				AN442-D4		
-3	28-5MN	28B5100	1				AN442-D3		
-3	28-5MN	28B5100	1				28B2224-3	2	2
	PBY-5A	28B5100	1				22Q035	4	3
	PBY-5	28B5100	1				28B2285-9		1
	PBY-4	28B2100					-8		1
	PBY-3	28B2100					28B2783-2	1	
	PBY-2	28B2100							
REQUIREMENTS PER AIRPLANE				MAT.	PARTS LIST PER ASSY.				-3

REPLACES	28B1783
APPROVED / DATE	2-10-38
CALC. WT.	.88
ACT. WT.	
REPLACED BY	
LIMIT ON DIMENSIONS UNLESS OTHERWISE NOTED	1/32
SCALE	12" = 1'-0"

AC				
NAVY NOTED	NOTED	NOTED	NOTED	1-8-37
MATERIAL	SPEC.	HEAT TREAT	FINISH	DRAFT / CHECK / EXAM.

CONSOLIDATED AIRCRAFT CORP.
SAN DIEGO, CALIF.

NAME: FLOOR - HULL FRONT GUNNER'S

OPP. HAND

DWG. G 28B2783

SUPPLIES & EQUIPMENT CLASSIFICATION			
LET	ALTERATION	DATE	BY
C	TRACED	7-22-38	
D	REMOVE 28B1067 FROM B.M.S. FACE OF DWG AND NOTE ADDED	7-8-41	

A 6432

4 - 3/16 DIA HOLES

AN442-03

STA "133

22F318 CLIP (REF)

28B019-3 (REF)

220035 STANLEY FASTENER

SECTION C-C

14 3/4

2 1/4

B

C

C

4 1/2

1 1/4

D

D

FORWARD

A

A

1 1/4

7 CORRUGATIONS

3 15/16

3 15/16

11

2

1R

1/2R

1/8R

1 1/2

1

STA "1

1 3/8 (REF)

B

SECTION B-B

1" DIA. FLAT SPACE AT LOCATION OF EACH FASTENER

28B2224-3

SECTION A-A

28B2224-3

AN442-D4

SECTION D-D

"ANCHOR NUTS & STANLEY FASTENERS ARE TO BE FINISHED AS PER SPEC. ZF-28-006 #102.28 SPEC. ZF-28-006 #102.28". ANCHOR NUTS (STEEL) & STANLEY FASTENERS. APPLY 1 BRUSH COAT OF ZINC CHROMATE PRIMER TO THE CONTACTING SURFACES OF THE NUT OR FASTENER. APPLY 2 COATS OF PRIMER TO THE SUPPORTING SURFACE. ASSEMBLE WITH ZINC CHROMATE PASTE IN THE JOINT SUCH THAT EXCESS MATERIAL IS SQUEEZED OUT AT ALL BOUNDARIES. REMOVE THE EXCESS MATERIAL IN SUCH A MANNER AS TO FORM A FILLET."

MATERIAL:
24S AL ALLOY SHT. SPEC. 47A10 COND. "H.T. -2 SR 53 (COND. T)

FINISH:
Z-P BEFORE ATTACHING FASTENERS 220035. 2 COATS COMPLETE ASSEMBLY. GP

GP-GREEN PRIME FINISH COL. 17894

| | | |

LET	ALTERATION	DATE	BY
B	TRACED	7-15-38	[illegible]
C	5 1/8 DIM. WAS 5 1/4	10-28-40	[illegible]
D	DIM. 2 1/16 WAS 2 3/32, 2 17/64 WAS 2 5/16, 2 3/4 WAS 2 1/4, 3 15/64 WAS 3 5/16, 3 13/16 WAS 4 1/16. NO WT. CHG.	7-24-42	[illegible]

SUPPLIES & EQUIPMENT CLASSIFICATION

E.O. A48714

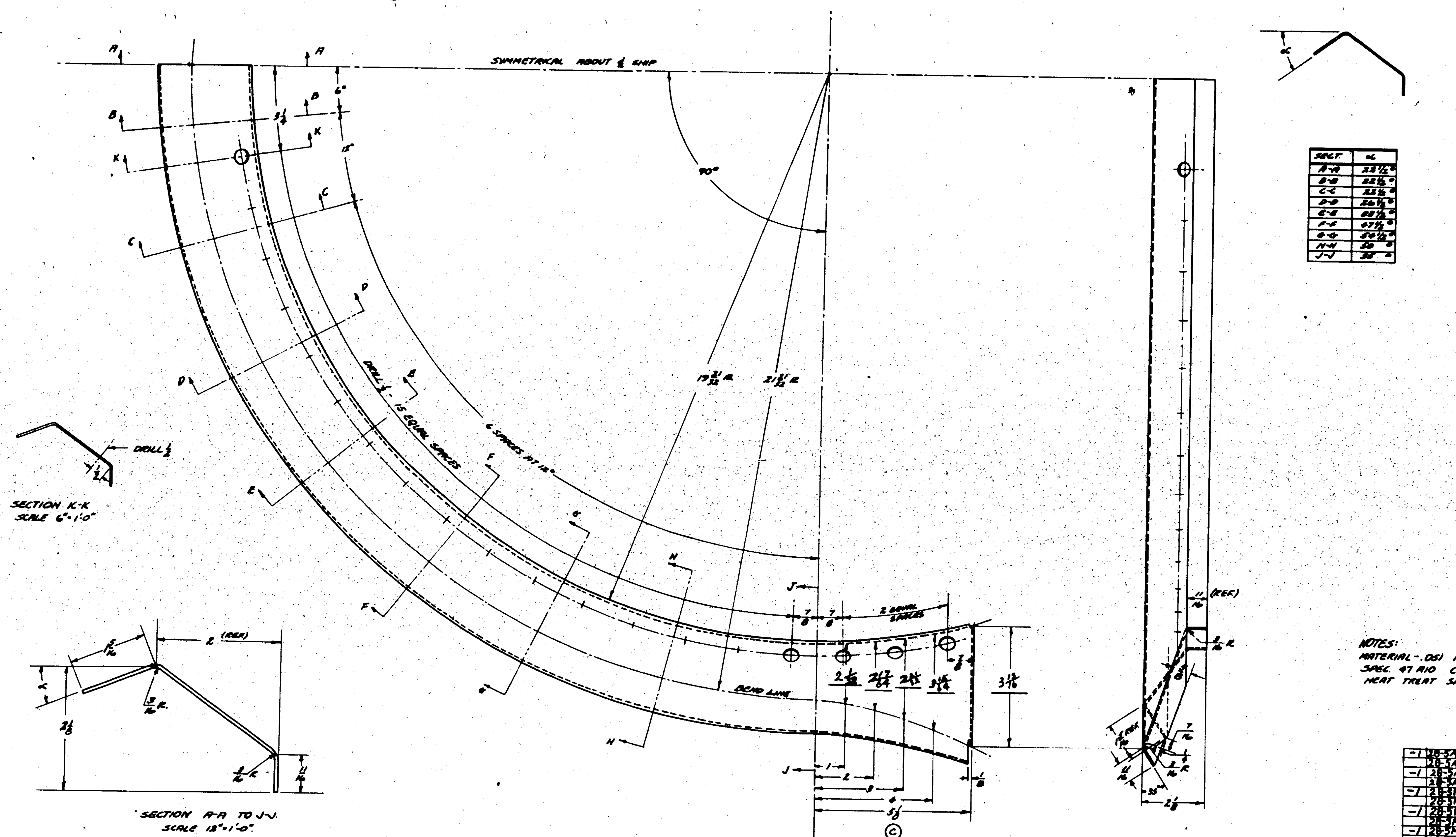

SECT.	α
A-A	23 1/2°
B-B	22 1/2°
C-C	22 1/2°
D-D	26 1/2°
E-E	28 1/2°
F-F	47 1/2°
G-G	54 1/2°
H-H	50°
J-J	35°

NOTES:
MATERIAL - .051 ALUM. ALLOY SHT.
SPEC. 47 A10 COND. A. (24SO)
HEAT TREAT SR 53 COND. T

O.H.	MODEL	NEXT ASSY.	REQ.
-1	28-5AMN	28B3034	
	28-5AMN	28B3034	
-1	28-5AMC	28B3034	
	28-5AMC	28B3034	
-1	28-5MN	28B3034	
	28-5MN	28B3034	
-1	28-5ME	28B3034	
	28-5ME	28B3034	
-1	28-5MC	28B3034	
	28-5MC	28B3034	
-1	28-5MA	28B3034	
	28-5MA	28B3034	
-R	PBY-5B	28B3034	1
-L	PBY-5B	28B3034	1
-R	PBY-5A	28B3034	1
-L	PBY-5A	28B3034	1
-1	PBY-5	28B3034	
	PBY-5	28B3034	
-1	PBY-4	28B3034	
	PBY-4	28B3034	
-1	PBY-3	28B3034	
	PBY-3	28B3034	

REQUIREMENTS PER AIRPLANE | ST'D PARTS | PART NO. | MAT. | PARTS LIST PER ASSY.

REPLACES: 28B1633 & 1634 FOR PBY-3
APPROVED: LCW DATE: 7-15-38
REPLACED BY:
CALC. WT.: .98 LBS. ACT. WT.
LIMIT ON DIMENSIONS UNLESS OTHERWISE SPECIFIED: 1/32 & 1/2°
SCALE: 6" = 1'-0", 12" = 1'-0"

A C
NAVY: NOTED | NOTED | NOTED | NONE
MATERIAL | SPEC. | HEAT TREAT | FINISH
DRAFT | CHECK | EXAM. | ENG.

CONSOLIDATED AIRCRAFT CORP.
SAN DIEGO, CALIF.

NAME: SUPPORT - HULL BOW GUN RING

OPP. HAND 28B2840-1

DWG. SIZE G 28B2840

SUPPLIES & EQUIPMENT CLASSIFICATION			
LET	ALTERATION	DATE	BY
C	TRACED	2-11-38	Bauer

ATTACH STANLEY FASTENERS IN POSITIONS AS SHOWN

Q5762-8-2 (REF.)

AN442-D4 RIVETS PLACED AS SHOWN

12 CORRUGATIONS APPROX. 1 3/16 PITCH.

Q5762-8-2 (REF.)

Q5762-8-2 (REF.)

Q4301

STRINGER #56

-3

-5 SUPPORT ANGLE

16 TRUE LENGTH

8 1/2

1 15/16

15/16

6 1/8 (REF.)

℄ SHIP.

16 1/8

15/16

1 15/16

2

-3 REF.

15 1/4

20

30°

1/4

30°

1/4

3/8

5/16

1/4

1

SECTION A-A

DRILL 7/16 3 HOLES

28B1967 WASHER

AN442-D3 RIVETS

22Q035 STANLEY FASTENER

SECTION C-C

STRINGER #56

Q5762-8-2

31 1/2

3 3/8

D

D

STRINGER #56

-3 REF.

22F075

AN442-D4

-6

VIEW D-D
DETAIL OF ATTACHMENT. FLOOR SUPPORT ANGLE & GUSSETS AT STA. #4.50 & #4.75

AN508-D6-7
AN340-D6

28B1391
Q5761-K5-1.5

.040

FORWARD

1

7/16

10 1/16

DETAIL OF -5
IDENTICAL TO 28B1861-9
SUPPORT ANGLE - FLOOR

2

1/2

1 3/16

1/2

DETAIL OF -6
(IDENTICAL TO 28B1861-10)
GUSSET - SUPPORT - FLOOR

NOTE:- FINISH Z-P2AL BEFORE ATTACHING 22Q035 FASTENERS
2AL 22Q035 PRIOR TO ATTACHING AL COMPLETE ASSEMBLY
Q5762-8-2 SECURE IN PLACE WITH CEMENT & Q4301 RIVETS.
WEBBING MUST BE WATERPROOF.

1/4

5/16

5/32R

1/4

1

1R

1R

1R

SECTION B-B

-2. .040 AL. ALLOY. SHEET. SPEC. 47A10 COND A (24S0) H.T. PER SPEC. SP-63 (24ST)

-3-4-5. 3/16 x 3/16 x 1/16 ANGLE DIE #K-5401 SPEC. 48A9 COND T AL. ALLOY EXT. (24ST)

-6. .051 AL. ALLOY. SHEET (24ST) SPEC. 47A10 COND T.

| | | |

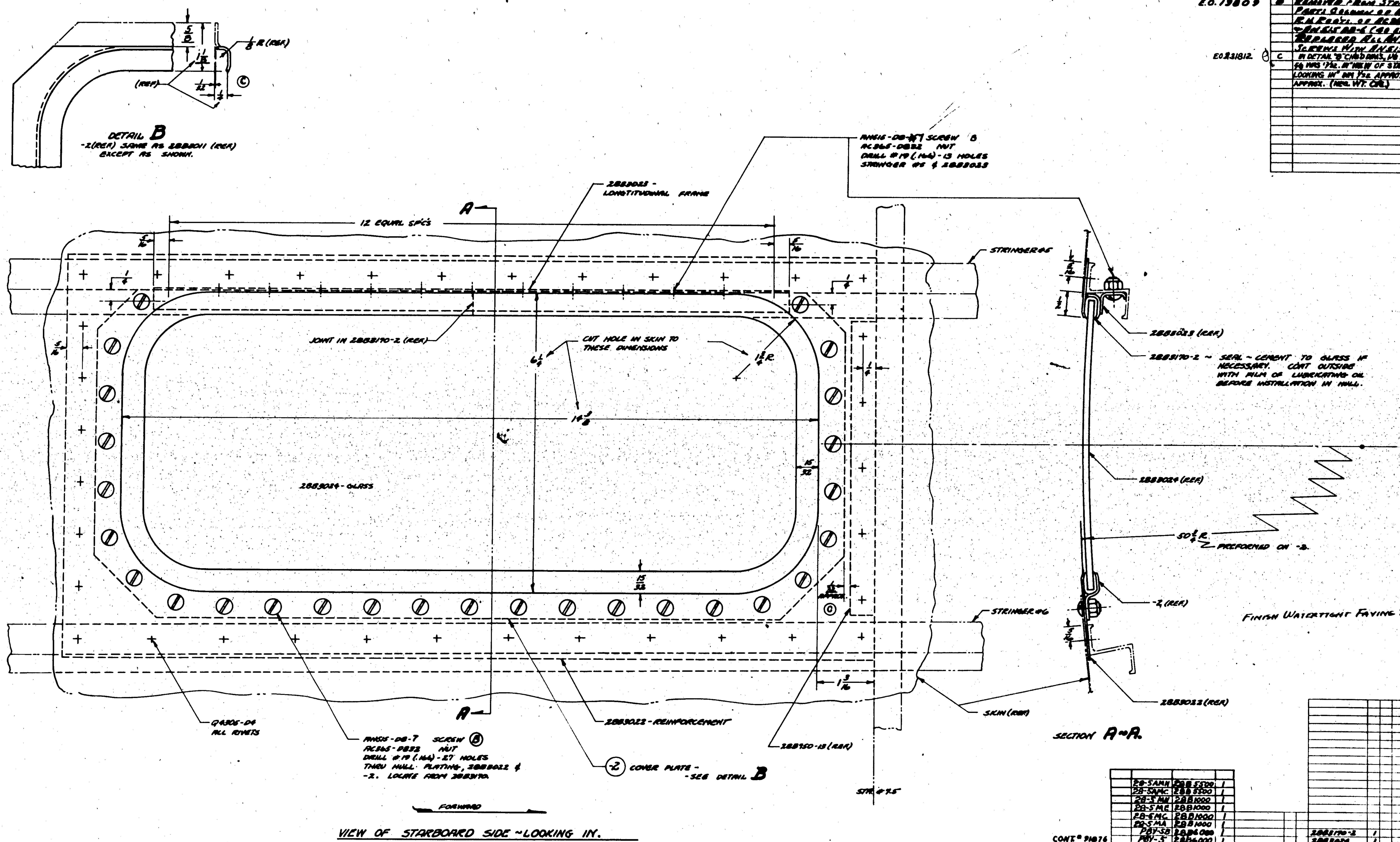

SUPPLIES & EQUIPMENT CLASSIFICATION

LET	ALTERATION	DATE	BY
A	TRACED	7-14-38	[illegible]
B	REMOVED FROM STANDARD PARTS COLUMN OF B.M. THE R.H. REQ'D. OF AC365-DB32 & AN515-DB-6 (40 EACH). REPLACED ALL AN515-DB-6 SCREWS WITH AN515-DB-7 (E.O. 13809)	4-30-41	[illegible]
C	IN DETAIL "B" CHGD DIMS, 1/16 WAS 1 1/32 & 5/8 WAS 1/32. IN "VIEW OF STARBD SIDE LOOKING IN" DIM 1/32 APPROX. WAS 1/16 APPROX. (NEG. WT. CHG.) (E.O. 231812)	1-29-42	[illegible]

	MODEL	NEXT ASSY.	REQ.
	28-5AMN	28B5500	1
	28-5AMC	28B5500	1
	28-5MN	28B1000	1
	28-5ME	28B1000	1
	28-5MC	28B1000	1
	28-5MA	28B1000	1
	PBY-5B	28B6000	1
	PBY-5	28B6000	1
	PBY-5	28B1000	1
	PBY-5A	28B5000	1
	PBY-4	28B1000	1
	PBY-3	28B1000	1

ST'D PARTS	LH REQ.	RH REQ.	PART NO.	LH REQ.	RH REQ.
			2883170-2	1	
			2883024	1	
			2883023	1	
AC365-DB32	40		2883022	1	
AN515-DB-7	40				
Q4305-D4			2883021-2	1	

CONT.# 91876
CONT.# 70496

288/910 REPLACES	RCW 7-14-38 APPROVED DATE
REPLACED BY	1.94 LBS. CALC. WT. / ACT. WT.
1/32 LIMIT ON DIMENSIONS UNLESS OTHERWISE SPECIFIED	12" = 1'-0" SCALE

REQUIREMENTS PER AIRPLANE — MAT. — PARTS LIST PER ASSY

AC				
NAVY NOTED	NOTED	NONE	WS	
MATERIAL	SPEC.	HEAT TREAT	FINISH	

6-2-37 JFK — DRAFT, CHECK, EXAM.

CONSOLIDATED AIRCRAFT CORP. SAN DIEGO, CALIF.

NAME: PORT INSTALLATION — HULL-TUNNEL GUNNERS-FIXED

OPP. HAND

DWG. G 2883[illegible]

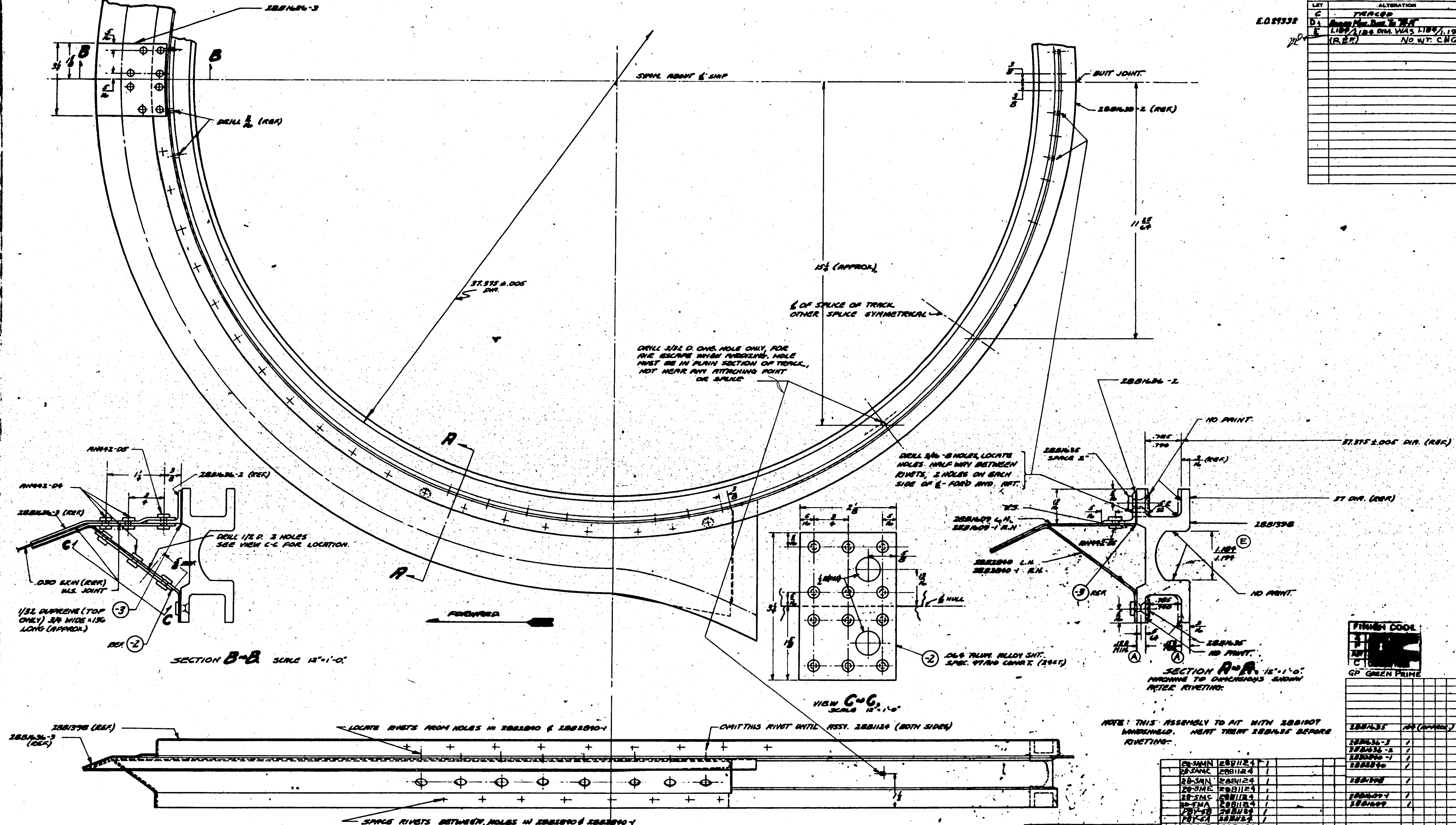

E.O.29332

LET	ALTERATION	DATE	BY
C	TRACED	7-10-40	
D	[illegible]	11-25-40	
E	1.184/1.194 DIM. WAS 1.184/1.194 (REF) NO WT. CHG.	9-23-43	CRA

SUPPLIES & EQUIPMENT CLASSIFICATION

NOTE: THIS ASSEMBLY TO FIT WITH 2881907 WINDSHIELD. HEAT TREAT 2881635 BEFORE RIVETING.

ASSY ORDER :-
1. ASSEMBLE THE FOLLOWING PARTS: 2883034-2,-3; 2881398; 2882840; 2882840-1; 2881636-2.
2. MACHINE TO GIVEN DIMENSIONS
3. FINISH THE ASSEMBLY Z-P-ZGP OMIT PAINT WHERE NOTED.
4. ADD 2881609, 2881609-1, & 2881636-3 TO ASSEMBLY.

FINISH CODE
[redacted]
GP GREEN PRIME

MODEL	NEXT ASSY.	REQ.	STD PARTS	PART NO.	REQ.
				2881635	104 (APPROX.)
				2881636-3	1
				2881636-2	1
28-5AMN	2881124	1		2882840-1	1
28-5AMC	2881124	1		2882840	1
28-5MN	2881124	1		2881398	1
28-5ME	2881124	1			
28-5MC	2881124	1		2881609-1	1
28-5MA	2881124	1		2881609	1
PBY-5B	2881124	1			
PBY-5A	2881124	1			
PBY-5	2881124				
PBY-4	2881124		AN442-D4	-2	1
PBY-3	2881124		AN442-D5	2883034-3	1

REQUIREMENTS PER AIRPLANE · MAT. · PARTS LIST FOR ASSY. ASY-3

MATERIAL	SPEC.	HEAT TREAT	FINISH
NAVY NOTED	NOTED	NOTED	NOTED

ACT. WT. · CALC. WT. .015 · SCALE 12"=1'-0" · DATE 7-9-40

[redacted]

CONSOLIDATED AIRCRAFT CORP. SAN DIEGO, CALIF.

NAME TRACK ASSEMBLY HULL BOW GUN.

G 2883034

BUREAU CHANGE INCORPORATED
CHANGE #49 PBY-1 ALL
CHANGE # 4 PBY-2 ALL

SUPPLIES & EQUIPMENT CLASSIFICATION			
LET	ALTERATION	DATE	BY
H	TRACED	2-28-39	WATSON
J	2881701-5 FOR PBY-5 FROM 2881701-3		
	FOR PBY-5 - NUMBER -55 ASSY.	4/24/42	[illegible]
K	2883131-4 (2) 2883134-2	10-21-40	[illegible]
	ADD 2883131-4(2) 2883134-2 (CHG (4))		
	2883131-3 (20) (CHG (24))		
L	REMOVED 2881126-2 FROM -55 ASSY IN B/M.	11-28-41	[illegible]
M	"NEOPRE 1/16 THICK" WAS		
	"MARINE GLUE & FABRIC"	1-7-41	[illegible]
N	ASSIGNED DASH NUMBER 6 TO 1/4 NEOPRENE ON		
	FACE 6 IN B/M.	7-2-42	[illegible]
P	2883131-5 (4) REPLACED 2883134-10		
	NO WT. CHG	6/5/43	[illegible]

E.O. 26500A
E.O. 24056
PBY(2,3,4)45

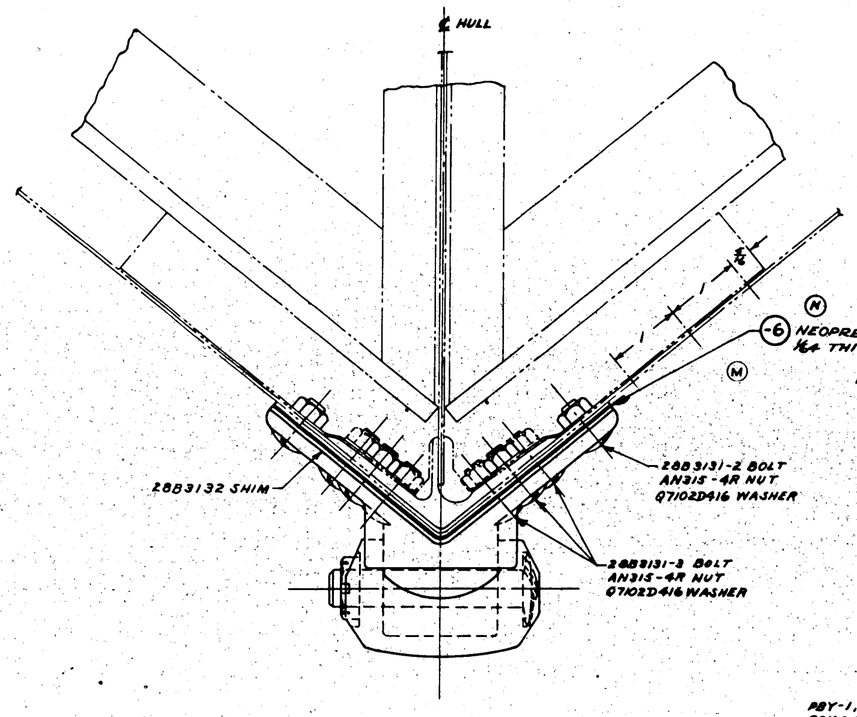

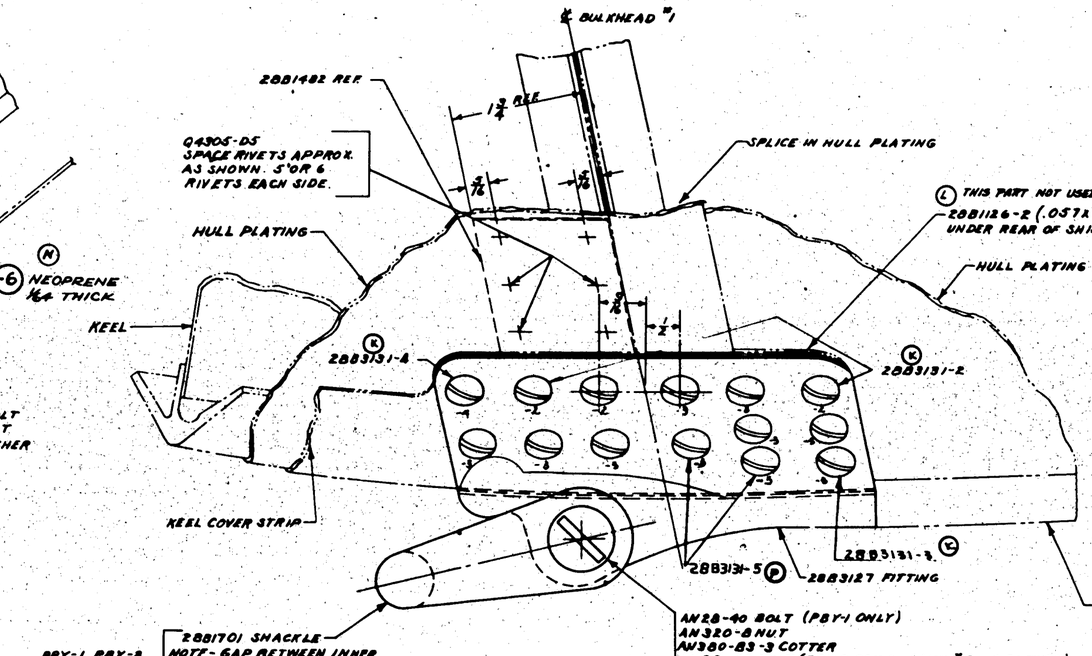
℄ BULKHEAD "1
2881482 REF.
Q4905-DS SPACE RIVETS APPROX. AS SHOWN. 5 OR 6 RIVETS EACH SIDE.
1 3/4 REF
SPLICE IN HULL PLATING
(L) THIS PART NOT USED ON -55 ASSY.
2881126-2 (.057 X 6 X 1 1/2 AL. ALLOY SHEET (24ST) SPEC. 4TA10 COND. T UNDER REAR OF SHIM
HULL PLATING
HULL PLATING
KEEL
(K) 2883131-4
(K) 2883131-2
KEEL COVER STRIP
2883131-5 (P)
2883127 FITTING
(C)
RUBBING STRIP
AN28-40 BOLT (PBY-1 ONLY)
AN320-8 NUT
AN380-83-3 COTTER
AN28-42 BOLT (PBY-2, PBY-3, COMM "3, & FUTURE)

PBY-1, PBY-2, PBY-3 & COMM "3 — 2881701 SHACKLE
NOTE - GAP BETWEEN INNER FACES OF LEGS MAY VARY FROM 1 1/32 TO 1 21/32
PBY-4 — 2881701-3 SHACKLE
(J) PBY-5 & FUTURE — 2881701-5 SHACKLE

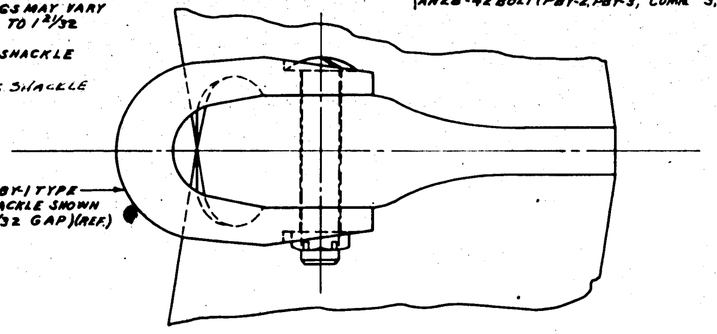

FINISH CODE	
Z	ANODIC TREATMENT
P	P-27 PRIMER
AP	ALUMINIZED PRIMER
C	CADMIUM PLATE

NOTE —
ALL BOLTS EXCEPT AS NOTED ARE 2883131-3
STAKE ALL BOLTS, ATTACHING FITTING TO HULL, IN 3 PLACES EACH BOLT.

FINISH —
3P ON HULL PLATING UNDER FITTING.
WHEN PRIME IS DRY, ASSEMBLE AND GIVE ONE COAT BLACK BITUMASTIC ALL OVER

NOTE —
FOR REPLACEMENTS ORDER 2883126-55

C-91876
C-70496

G.N.	MODEL	NEXT ASSY.	REQ.	ST'D PARTS	PART NO.	-2 LH	-2 RH	-4 LH	-4 RH	-5 LH	-5 RH	-55 LH	-55 RH
					2883131-5	4		4		4		4	
					AN380-83-3	1		1		1		1	
					AN320-8	1		1		1		1	
					AN3HC-4R	20		20		20		20	
					AN28-42	-		1		1		1	
					AN28-40	1		-		-		-	
					Q-4705D5								
					Q7102D416	20		20		20		20	
					2883126-2	1		1		1			
-55	AA-3M[illegible]	2883000	1										
-55	PBY-5B	2883000	1		2883131-4							2	
-55	PBY-5	2883000	1		2881701-5							1	
-55	PBY-5	2883000	1		2883132	1	1					1	
-55	PBY-5	2883000			2883131-3	20	20					16	
-6	PBY-4	2881000			2883131-2	4		4		4		4	
-4	COMM "3	2881000			2883127	1		1		1		1	
-4	PBY-3	2881000			2881701-3	-		-		-		-	
-4	PBY-2	2881000			2881701	1		1		-		-	
-2	PBY-1	2881000			-5	1		1		1		1	
	REQUIREMENTS PER AIRPLANE			MAT.	PARTS LIST PER ASST.	-2		-4		-5		-55	

2881126, FOR ALL PBY'S, PBY-2, PBY-3 — ACW 2-28-39
REPLACED BY — ANI-1 AH
F32 — 12" = 1'-0"
A.C. — NAVY NOTED — MATERIAL
NOTED — SPEC.
NONE - — HEAT TREAT
NOTED — FINISH
DRAFT Bayly — CHECK — ENGR. R — ENG.

CONSOLIDATED AIRCRAFT CORP. SAN DIEGO, CALIF.
NAME: FITTING-INSTALL.-HULL MOORING & TOWING
OPP. HAND
DWG 2883[illegible]

BUREAU CHANGE INCORPORATED

CHANGE "A" PBY-1 ALL
CHANGE "A" PBY-2 ALL

CO 6728
P.O. 22836

SUPPLIES & EQUIPMENT CLASSIFICATION			
LET	ALTERATION	DATE	BY
C	TRACED	10-8-37	[illegible]
D	NEXT ASSYS. FOR PBY-1, PBY-2, AND PBY-3A) HAS 2281126	1-8-37	[illegible]
E	ADDED SHIM DRILL NOTE	1-10-38	[illegible]
F	5/16 R. WAS 3/8 R.	12-23-41	[illegible]

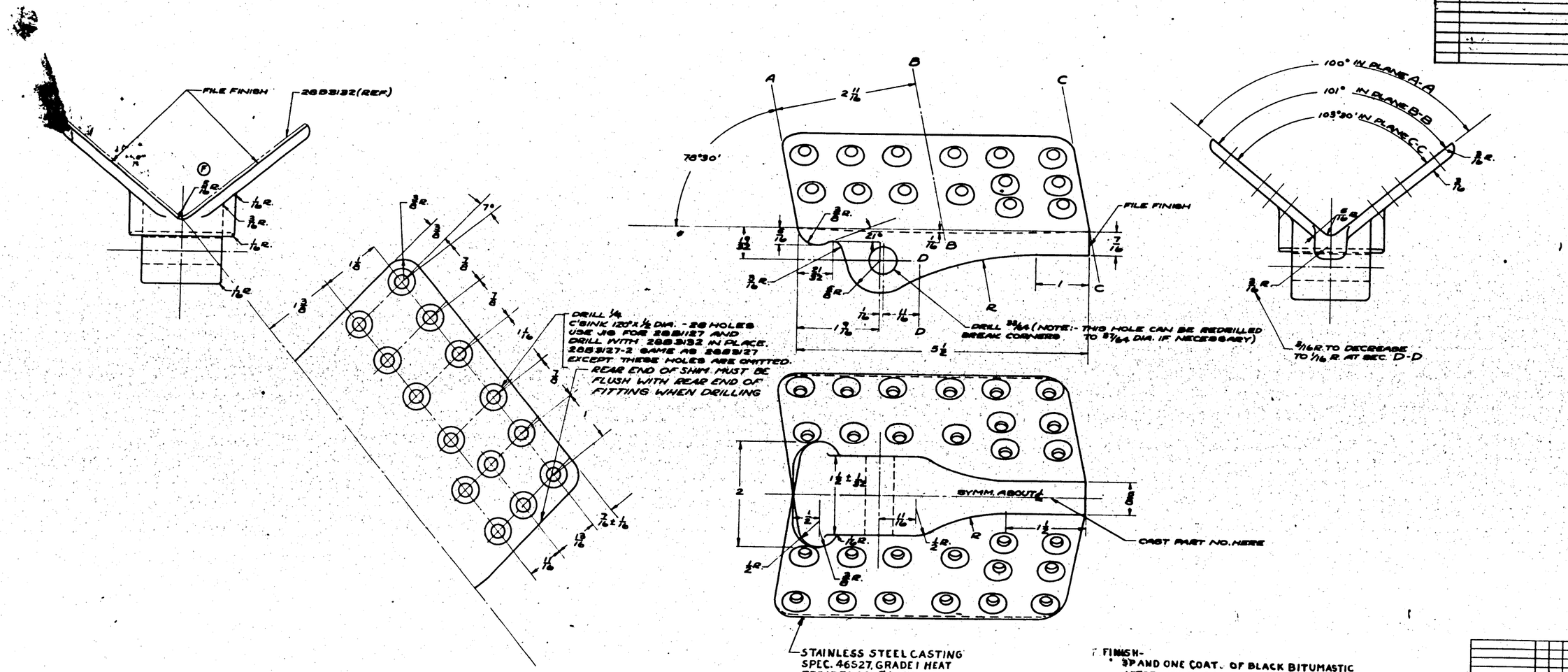

FINISH-
3 P AND ONE COAT OF BLACK BITUMASTIC
AFTER HOLES ARE DRILLED AND C'SINK.
NO PAINT IN 33/64 HOLE.

NOTE-ALL INTERSECTING SURFACES
TO HAVE R. FILLET OR CORNER
UNLESS SHOWN OTHERWISE.

2883127 DR
REPLACED 9-10-37
REPLACED BY
LIMIT ON DECIMALS UNLESS +

RCW 10-8-37
APPROVED DATE
4.60
CALC. WT. ACT. WT.
1/32
SCALE 12" = 1'-0"

	PBY-3B	2883126	1														
	PBY-3A	2883126	1														
	PBY-3	2883126															
-2	XPBY-1	2881126															
	PBY-2	2883126															
	PBY-2	2883126															
	PBY-2	2883126															
	PBY-2	2883126															
	PBY-1	2883126															
O. N.	MODEL	NEXT ASSY.	REQ.	ST'D PARTS	LH	RH	PART NO.	LH	RH	LH	RH	LH	RH	LH	RH	LH	RH
					REQ.			REQ.		REQ.		REQ.		REQ.		REQ.	
REQUIREMENTS PER AIRPLANE				MAT.	PARTS LIST PER ASSY.												

A C

NAVY NOTED	NOTED	NOTED	NOTED	9-22-37
MATERIAL	SPEC.	HEAT TREAT	FINISH	DRAFT

CONSOLIDATED AIRCRAFT CORP. SAN DIEGO, CALIF.

NAME FITTING-HULL MOORING AND TOWING

GPP. HAND
SIZE G
2883127

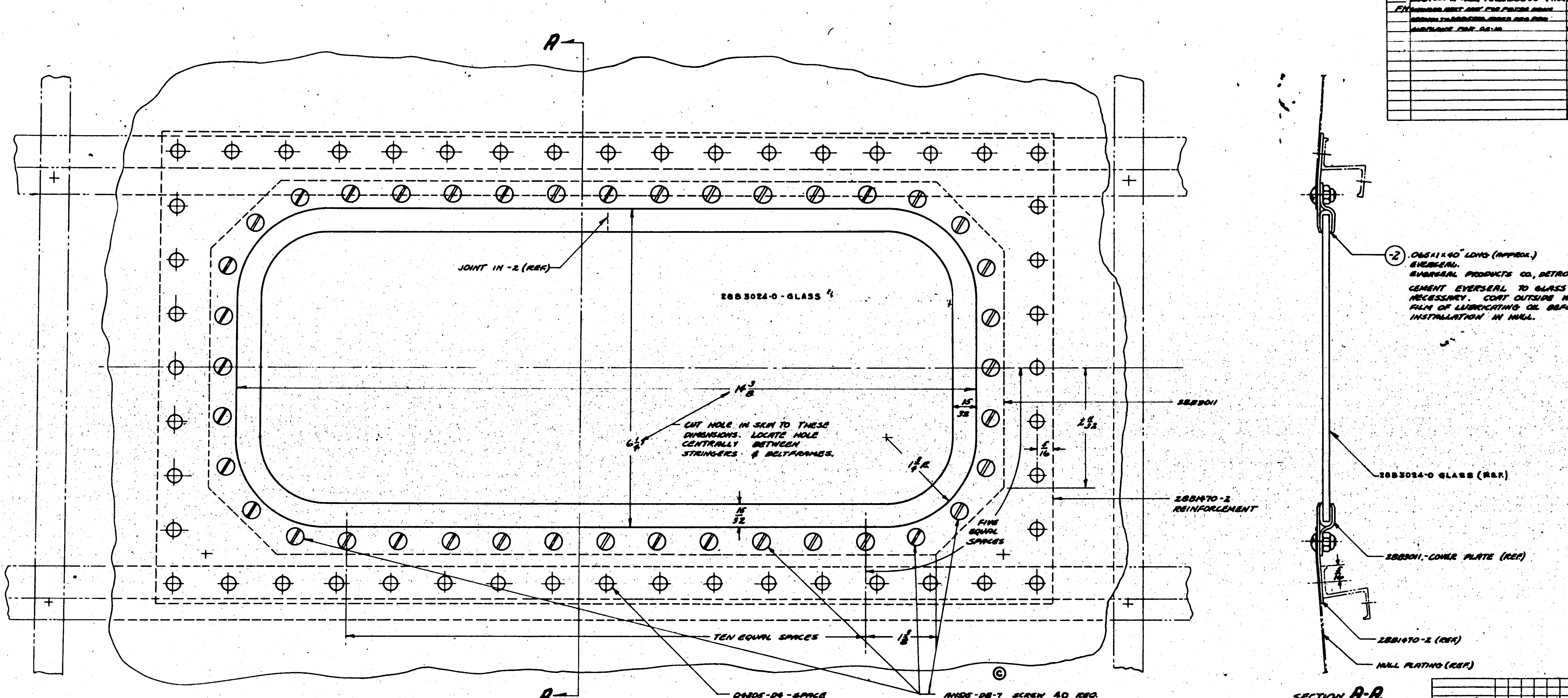

E.O. 19809
E.O. 33711

SUPPLIES & EQUIPMENT CLASSIFICATION

LET	ALTERATION	DATE	BY
B	TRACED	7-14-38	[illegible]
C	27 Screws were AN515 D8-5	[illegible]	[illegible]
D	28B3024-0 WAS 28B3171 MODELS ADDED PBY-5 & PUT. ASSY. CREATED.	4-9-41	[illegible]
E	CHANGED NEXT ASSY & REQ PER AIRPLANE FOR 28-5AMC FROM 28B1000 2 REQ TO 28B5500 1 REQ	[illegible]	
F	CHANGED NEXT ASSY FOR [illegible] ADDED REQ PER AIRPLANE FOR [illegible]	[illegible]	

D.H.	MODEL	NEXT ASSY.	REQ.
	PBY-5B	28B6000	2
-2	PBY-5B	28B3021	1
-2	PBY-5B	28B5161	1
	28-5MN	28B1000	2
-2	PBY-5A	28B3021	1
	28-5AMC	28B5500	1
-2	[illegible]	28B5161	1
-2	[illegible]	28B3497	1
-2	PBY-6A	28B3497	1
-2	[illegible]	28B3497	1
-2	[illegible]	28B3497	2
	28-5ME MC	28B1000	2
	PBY-5A	28B5500	2
	PBY-5	28B1000	3
-2	[illegible]	32B012	1
	PBY-4	28B1000	
	PBY-3	28B1000	
	PBY-3	28B1100	3

STD PARTS	REQ.
AN505-D8-7	40
AC365-D832	40
Q4305-D4	

PART NO.	LH	RH
28B3024-0	1	1
28B3011	1	1
28B1470-2	1	1
28B3170-2	1	1

REQUIREMENTS PER AIRPLANE 5 — MAT. PARTS LIST PER ASSY. PBY-3

28B1170 REPLACES — RCW APPROVED 7-14-38 DATE
REPLACED BY — 2.22 CALC. WT. — ACT. WT.
SCALE 12"=1'-0"

[redacted]

A C
NAVY NOTED MATERIAL — NOTED SPEC. — NONE HEAT TREAT — NS FINISH
DRAFT — CHECK — EXAM.

CONSOLIDATED AIRCRAFT CORP. SAN DIEGO, CALIF.

NAME PORT INSTALLATION HULL ~ FIXED REAR.

DWG. G 28B317[illegible]

E.O. 19809
E.O. 33714, PBY-5
28-5MA, PBY-5A, OA-10

SUPPLIES & EQUIPMENT CLASSIFICATION			
LET	ALTERATION	DATE	BY
B	TRACED	7-15-38	
C	Screws were AN 515 DB-6	10-29-40	
D	28B3024-0 WAS 28B3171	4-21-41	

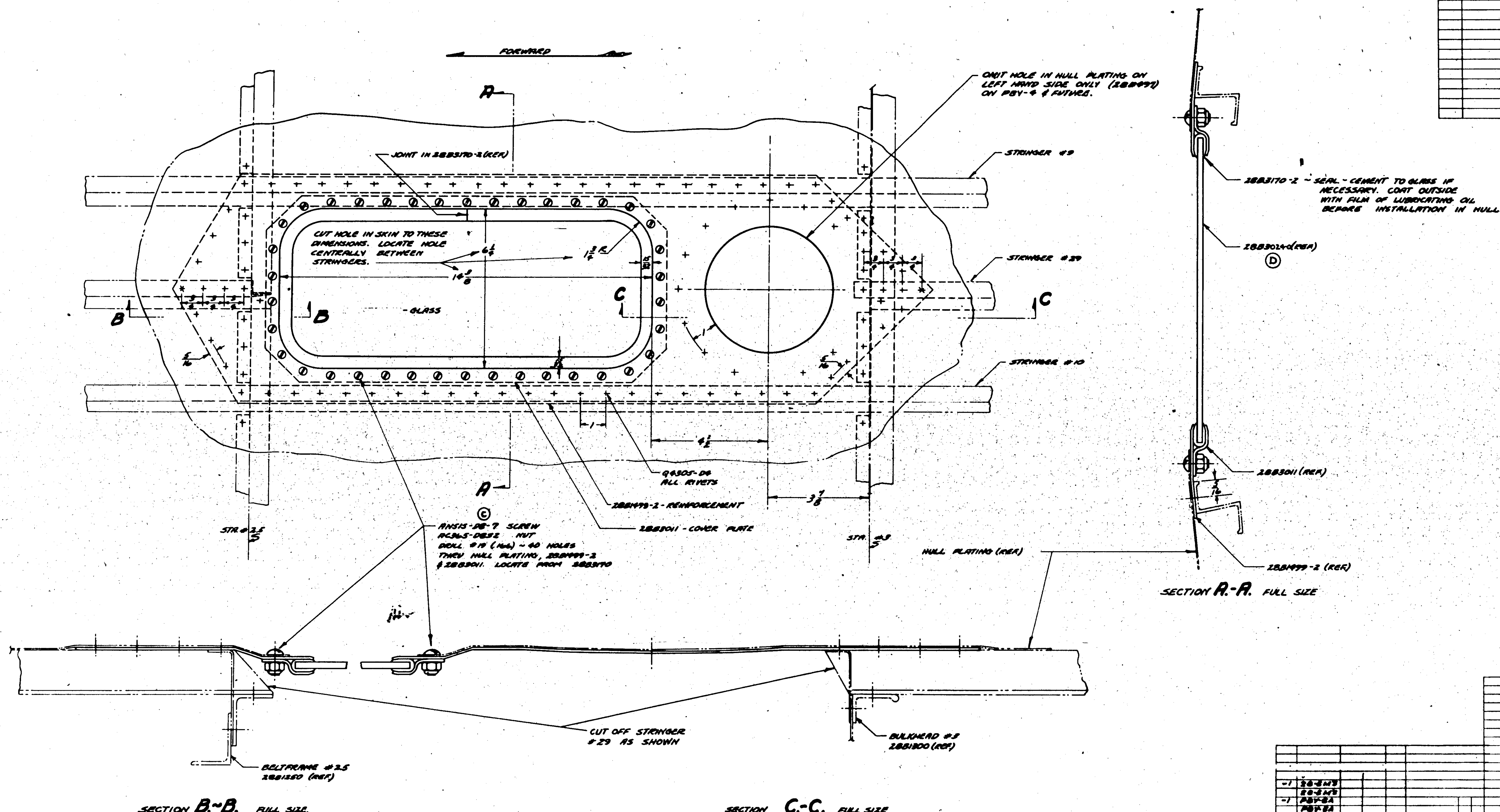

O.H.	MODEL	NEXT ASSY.	REQ.	ST'D PARTS	LH REQ.	RH REQ.	PART NO.	LH REQ.	RH REQ.
-1	28-5MA								
	28-5MA								
-1	PBY-5A								
	PBY-5A								
-1	PBY-5								
	PBY-6								
-1	PBY-4	28B1000					28B3024-0	1	1
	PBY-4	28B1000		AC365-DB32	40	40	28B3170-2	1	1
-1	PBY-3	28B1000	1	AN515-DB-7	40	40	28B3011	1	1
	PBY-3	28B1000	1	Q4305-D4			28B1999-2	1	1

REQUIREMENTS PER AIRPLANE | 5 MAT. | PARTS LIST PER ASSY. PBY-3

28B1497 REPLACES	LCW APPROVED	7-15-38 DATE	
REPLACED BY	2.71 .284 CALC. WT.	ACT. WT.	
LIMIT ON DIMENSIONS UNLESS OTHERWISE SPECIFIED ± 1/16	6"=1'-0" AND SCALE NOTED		

AC			
NAVY NOTED	NOTED	NONE	NS
MATERIAL	SPEC.	HEAT TREAT	FINISH

DRAFT JPK | CHECK | ENGR. | DRAWN

CONSOLIDATED AIRCRAFT CORP.
SAN DIEGO, CALIF.

NAME PORT INSTALL - HULL FRONT FIXED.

OPP. HAND 28B3497-1
DWG. SIZE G 28B3497

SUPPLIES & EQUIPMENT CLASSIFICATION			
LET	ALTERATION	DATE	BY
C	TRACED TO DATA	FEB. 1937	E. [illegible]
D	ADDED SECTION DD. ADDED ASSEMBLY - 50	8-24-40	EVELS

EO-16905

Q5762-KB-2 (REF.)

16⅞

ATTACH STANLEY FASTENERS IN POSITIONS AS SHOWN MAINTAIN FLAT SPACE OF 1" DIA. AT EACH FASTENER

AN442-DA RIVETS PLACED AS SHOWN

12 CORRUGATIONS AT APPROX. 1¾" PITCH

Q5762-KB-2 (REF.)

4½ (REF.)

25⅞

8½

Q4305DA

Q5762-KB-2 (REF.)

3/32

STRINGER #56

28B2861-3

SUPPORT ANGLE ASS'Y. 28B2861-7 SEE VIEW C.C.

1½ E.

6⅛ (REF.)

℄ SHIP

14½

AN442-DA SPACE AT EVERY SECOND CORRUGATION AS SHOWN

5/16

3½

1½ E.

2" Thick

18 TRUE LENGTH

7⅜ TRUE

18⅜

15½ (REF.)

20⅞

5/16

30°

1/4

SECTION A-A

5/16

1/4

1

3/8

MATERIAL

.040 AL. ALLOY SHEET SPEC. 47A40 COND. A (AN-A-30) H.T. PER SPEC. 51E53 (24 ST)

3/8 x 3/4 x 1/16 AL. ALLOY ANGLE DIE #E3401 SPEC. 46A3 COND T (24 ST)

NOTES:

Q5762-B-2 SECURE IN PLACE WITH CEMENT & Q4305-DA RIVETS. WEBBING MUST BE WATERPROOF

5/32

1/4

1

1/8 E.

DRILL 7/16 3 HOLES

28B1367 WASHER

1¼

1

1/4

AN442-D3 RIVETS

22Q035 STANLEY FASTENER

SECTION BB

2

1 3/16

1/2

REF. DETAIL OF 28B2861-6 GUSSET - SUPPORT-FLOOR

28B2861-6 (REF.)

22F075

AN442-D4

28B2861-5 (REF.)

VIEW CC

DETAIL OF ATTACHMENT FLOOR SUPPORT ANGLE & GUSSETS AT STA #450 & #475

31½

AN505-D6-7

AN390-D6

Q5762-KB-2

STRINGER #56

28B2861-3

3⅜

3⅜

28B1391

Q5761-K5-15

STRINGER #44

28B1391 - BLOCK

AN 505 - D6-7

AN 340 - D6

Q5761-K5-15 CEMENT TO BLOCK

Ⓓ SECTION - D D -

SCALE - 12" = 1'-0"

AN505-D6-7

AN390-D6

28B1391

Q5761-K5-15

.040

FORWARD

1

18⅞

REF. DETAIL OF 28B2861-5 SUPPORT ANGLE FLOOR

NOTE: FINISH 2-P BEFORE ATTACHING 220035 FASTENERS P-220035 PRIOR TO ATTACHING. ZAL COMPLETE ASS'Y.

220035	3	3								
Q5762-KB-2	3	3	22F075	2	2					
AN442-D4	2	4	28B2861-7	1	1					
Q4305-DA	6	6	28B2861-5	1	1					
AN505-D6-7	6	12	28B1391	3	3					
AN505-D6			28B1391	2	4					
AN505-D5			28B2861-3	1	1					
AN505-D4	6	18	28B2861-2	1	1					
-50	PBY-5	20B2100	2							
-50	PBY	28B2100								
	PBY-4	20B2100A								
	PBY-3	20B2100B								
-0	-50	PART NO.	-0	-50						

REPLACED 28AB861 BY #28 ON	APPROVED	[illegible]	7-29-37							
REPLACED BY	DATE									
LIGHT ON DIMENSIONS UNLESS OTHERWISE SPECIFIED ± 1/64	JF 3/6 CALC WT.	ACT WT.	O.H.	MODEL	NEXT ASSY.	REQ.	ST'D PARTS	MAT.	PARTS LIST PER ASSY.	
	SCALE 1"=1'-0" 3/8"=1'-0"		REQUIREMENTS PER AIRPLANE						DRAFT	CHECK
	AC								7-9-37	ANON
	NAVY NOTED		NOTED		NOTED		NOTED			
	MATERIAL		SPEC.		HEAT TREAT		FINISH			

CONSOLIDATED AIRCRAFT CORP. BUFFALO, N. Y.

STAMP PT. No. WHERE SHOWN

NAME: FLOOR - HULL STA #450 TO STATION #475

OPP. HAND

SIZE G

28B3867

SUPPLIES & EQUIPMENT CLASSIFICATION			
LET	ALTERATION	DATE	BY
C	TRACED	[illegible]	[illegible]
D	CHANGED NOTE ON PC DWG. 7-21-41 TO READ 15 LBS PER SQ. IN IN A RESTRAINED COND." WAS "20 LBS PER SQ IN FOR 48 HRS.		

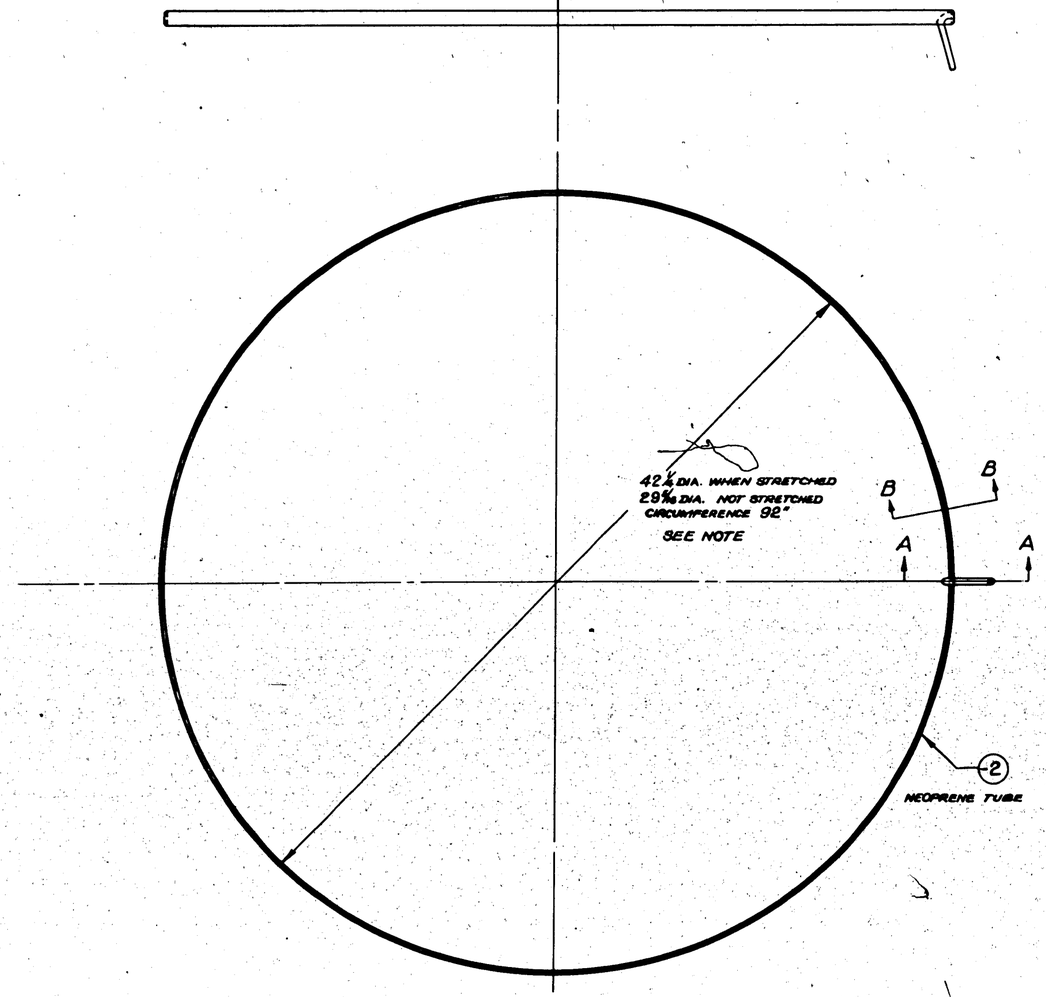

3"=1'-0"

PLAN VIEW

SHOWING GASKET STRETCHED OVER 42¼ DIA. RING.

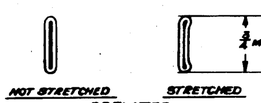

SECTION B-B

12"=1'-0"

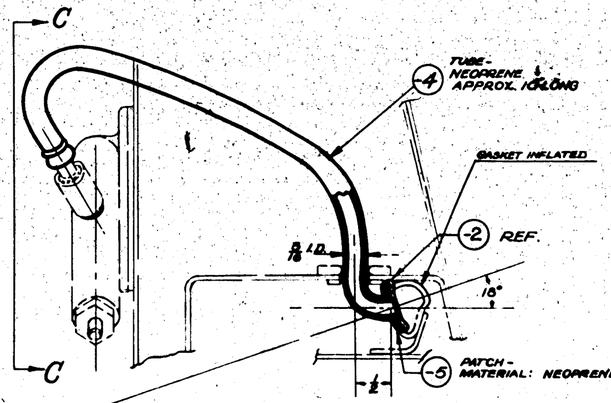

12"=1'-0"

SECTION A-A

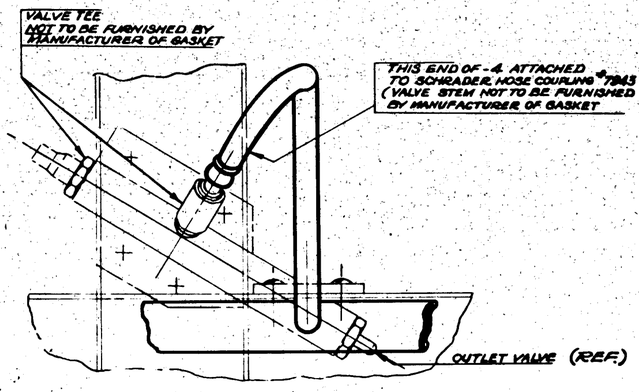
VALVE TEE
NOT TO BE FURNISHED BY MANUFACTURER OF GASKET
THIS END OF -4 ATTACHED TO SCHRADER HOSE COUPLING #7943 (VALVE STEM NOT TO BE FURNISHED BY MANUFACTURER OF GASKET
OUTLET VALVE (REF.)

VIEW C-C

D NOTE:
THIS GASKET MUST WITHSTAND A MAXIMUM PRESSURE OF 15 LBS. PER SQUARE INCH. IN A RESTRAINED CONDITION.

PBY-3 30-926-32

	PBY-5A	28B4041	1 EA								
	PBY-5	28B4041									
	PBY-4	28B4041									
	PBY-3	28B4041									
								-5	1		
								-4	1		
								28B4042-2	1		
								PART NO.	LH REQ.	RH REQ.	

REPLACES	C.W. APPROVED	5-23-39 DATE						
REPLACED BY								
LIGHT ON DIMENSIONS UNLESS OTHERWISE SPECIFIED ± 1/32	CALC.WT. .87	ACT.WT.	O.H.	MODEL	NEXT ASSY.	REQ.	ST'D PARTS	PARTS LIST PER ASSY.
	SCALE NOTED		REQUIREMENTS PER AIRPLANE				MAT.	
	AC							
	NAVY NOTED		COMM.	—	—			
	MATERIAL		SPEC.	HEAT TREAT	FINISH		DRAFT	CHECK

CONSOLIDATED AIRCRAFT CORP. BUFFALO, N. Y.

STAMP PT. No. WHERE SHOWN

NAME **GASKET** - PNEUMATIC HULL - REVOLV. CIRC. WINDSHIELD

SIZE G

28B4042

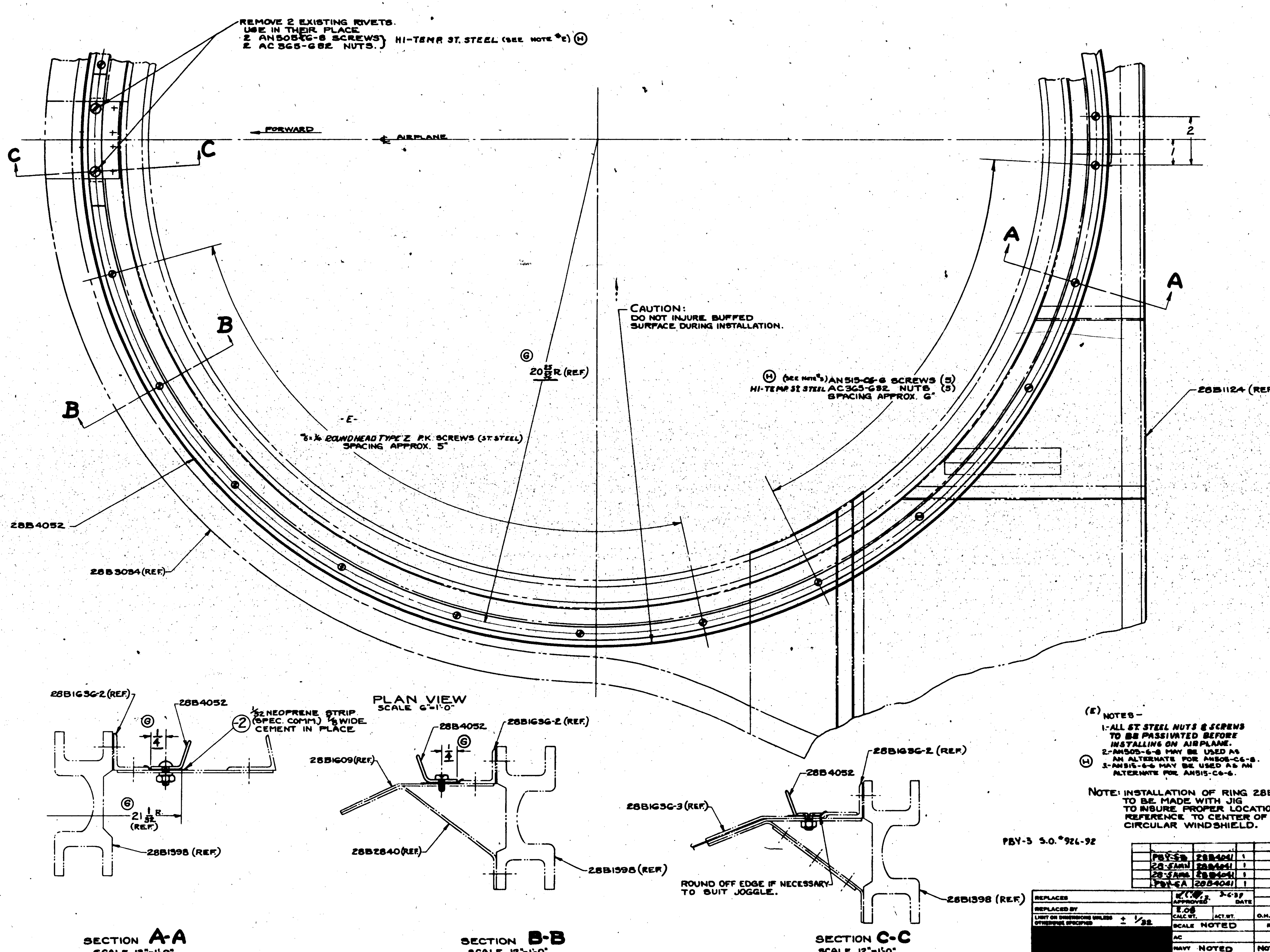

E.O.16160
E.O.C.#5218
EO-A16203

LET	ALTERATION	DATE	BY
	SUPPLIES & EQUIPMENT CLASSIFICATION		
D	TRACED	2-23-3[illegible]	[illegible]
E	CHANGED SCREWS & NUTS TO ST. STEEL	12-5-40	Dowd
F	CHG'D NOTE ON FACE OF DWG. "INSTALLATION OF RING" ETC.	9-22-41	Holo
G	SEC. A-A: 5/16 WAS 3/16, 21 1/32 WAS 21 3/32; SEC. B-B 1/4 WAS 5/16. PLAN VIEW: 20 25/32 R WAS 20 3/4 R. NO WT. CHG.	12-23-41	Smith
H	IN B.M. & ON FACE TO AN505-C6-8 ADDED "SEE NOTE #2". TO FACE ADDED NOTE #2 & -3. TO FACE & IN B.M. ADDED "SEE NOTE #3" TO AN515-C6-6. (NO WT. CHG.)	7-1-43	Knight

(E) NOTES –
1.- ALL ST. STEEL NUTS & SCREWS TO BE PASSIVATED BEFORE INSTALLING ON AIRPLANE.
(H) 2.- AN505-6-8 MAY BE USED AS AN ALTERNATE FOR AN505-C6-8.
3.- AN515-6-6 MAY BE USED AS AN ALTERNATE FOR AN515-C6-6.

NOTE: INSTALLATION OF RING 28B4052 TO BE MADE WITH JIG TO INSURE PROPER LOCATION WITH REFERENCE TO CENTER OF REVOLVING CIRCULAR WINDSHIELD.

PBY-3 S.O.#926-92

MODEL	NEXT ASSY.	REQ.	MODEL	NEXT ASSY.	REQ.	ST'D PARTS	REQ.	PART NO.	REQ.
			28-5MN	28B4041	1				
PBY-5B	28B4041	1	28-5ME	28B4041	1			Q5033Z-6-4	14
28-5AMN	28B4041	1	28-5MC	28B4041	1				
28-5AMA	28B4041	1	28-5MA	28B4041	1				
PBY-6A	28B4041	1	PBY-5	28B4041	1	AN515-C6-6	10 (SEE NOTE #3)		
			PBY-4	28B4041	1	AN505-C6-8	2 (SEE NOTE #2)	28B4052	1
			PBY-3	28B4041	1	AC365-632	12	28B4053-2	1

REPLACES	
REPLACED BY	
LIMIT ON DIMENSIONS UNLESS OTHERWISE SPECIFIED	± 1/32
APPROVED	[illegible] 3-6-39 DATE
CALC. WT.	.08
ACT. WT.	
SCALE	NOTED
REQUIREMENTS PER AIRPLANE	
PARTS LIST PER ASSY.	
MATERIAL	NAVY NOTED
SPEC.	NOTED
HEAT TREAT	NONE
FINISH	NONE
DRAFT	[illegible] 6-22-38
CHECK	[illegible] 9-11-38
STAN.	[illegible]
ENG.	R.
CONSOLIDATED AIRCRAFT CORP. BUFFALO, N.Y.	
NAME	INST.-RING-WATER SEAL BOW GUN-HULL
OPP. HAND	
SIZE	G
DWG. NO.	28B405[illegible]

LET	ALTERATION	DATE	BY

LET	ALTERATION	DATE	BY
A	CHGD 16 PL DIM TO 16 PL		
B	REMOVED 10 PL DIM. LOCATING 7 PL R (SO NOTED)		

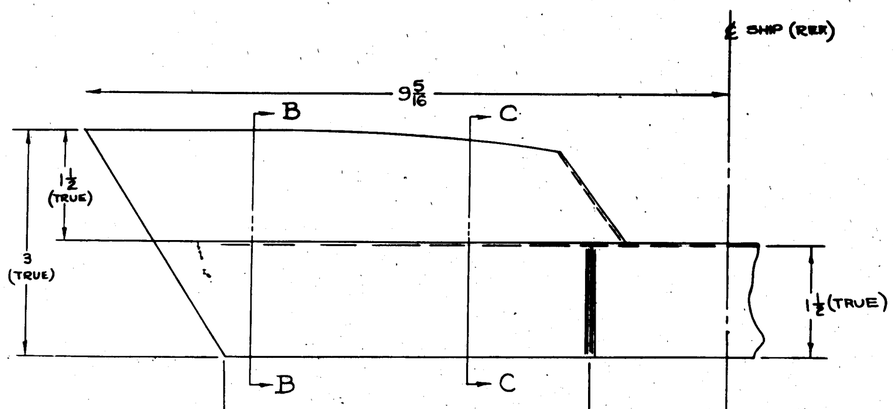

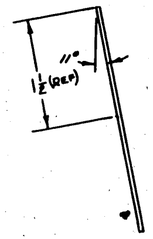

SEC B-B

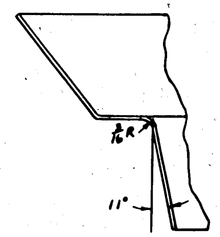

SEC C-C

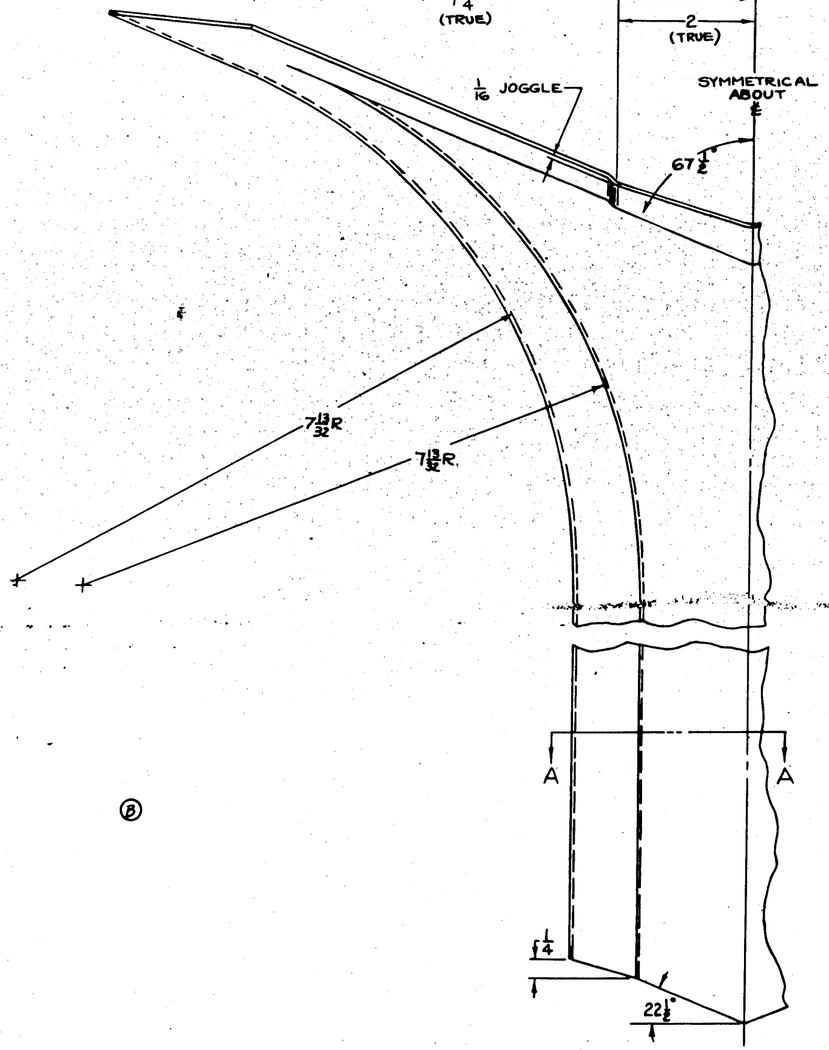

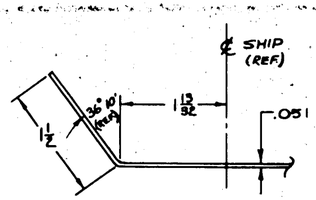

SEC. A-A

Ⓑ

BL BITUMASTIC COMPOUND

FINISH

Z	ANODIC TREATMT.
P	P-7 PRIMER
AP	ALUMINIZED PRIMER
C	CADMIUM PLATE

PBY-5A 28B4119 1
PBY-5B 28B4119 1
PBY-5 28B4119 1
(PBY-5A 28B4119 1

ASSY DRAWING NO.	MODEL	NEXT ASSY

REQUIREMENTS PER AIRPLANE

REPLACES 28B1860 or 5-14-36 CALC WT

REPLACED BY ACT WT

LIST ON SHEET NO. 1 SCALE 12"=1'-0"

STAMP PART NUMBER WHERE SHOWN

AL ALLOY (XB) 61S10 COND A

PART No.	STOCK	MATERIAL	SPEC.	LH RH REQ.	LH RH REQ.	LH RH REQ.	LH RH REQ.	LH RH REQ.
PARTS LIST PER ASSY.				-0	-2	-3	-4	-5

A C
NAVY SPEC. COND. T
HEAT TREAT

Z-P-2BC
FINISH

9-20-39
TRACER
DRAFT CHECK STRUCT MAT LAYOUT ENG

NAME CAP - HULL - STEP STA. # 7 - UPPER

OPP. HAND —

SIZE G

28B4118

CONSOLIDATED AIRCRAFT CORP. SAN DIEGO, CALIF.

LET	ALTERATION	DATE	BY

LET	ALTERATION	DATE	BY
A	REPLACED 28B1568 WITH 28B1568 -2 & -3	5-23-38	PGR
B	CHGD LENGTH OF -7 FROM 3¼ TO 4	6-22-38	PGR
C	ADDED PAY-S HEAT TREAT NEXT ASSY. REPLACED -7-8 WITH 28B1568 -2 & -3 WITH -9 FOR PAY-S	11-17-38	PGR

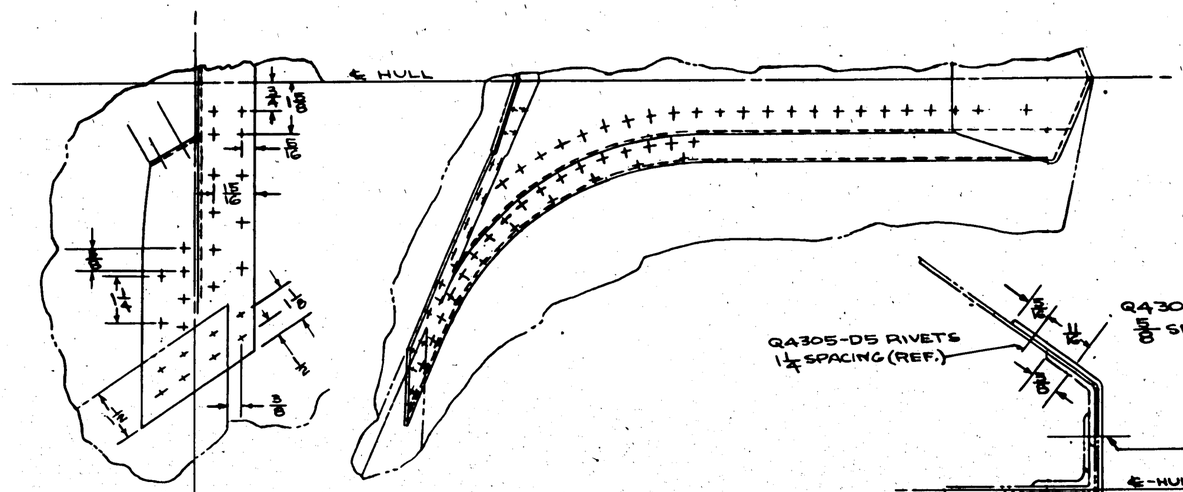

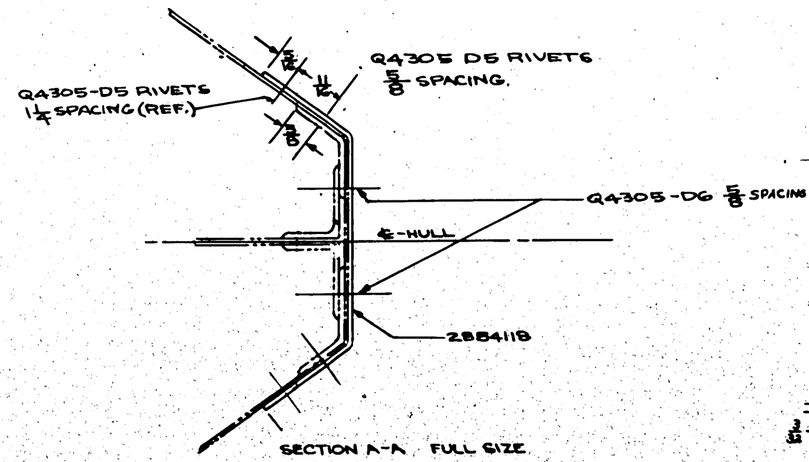

SECTION A-A FULL SIZE

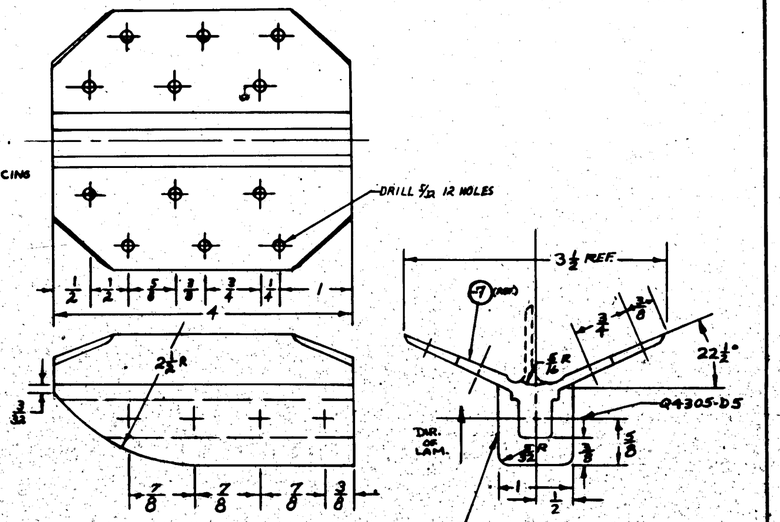

DETAIL "C"

FINISH WATERTIGHT FAYING SURFACES

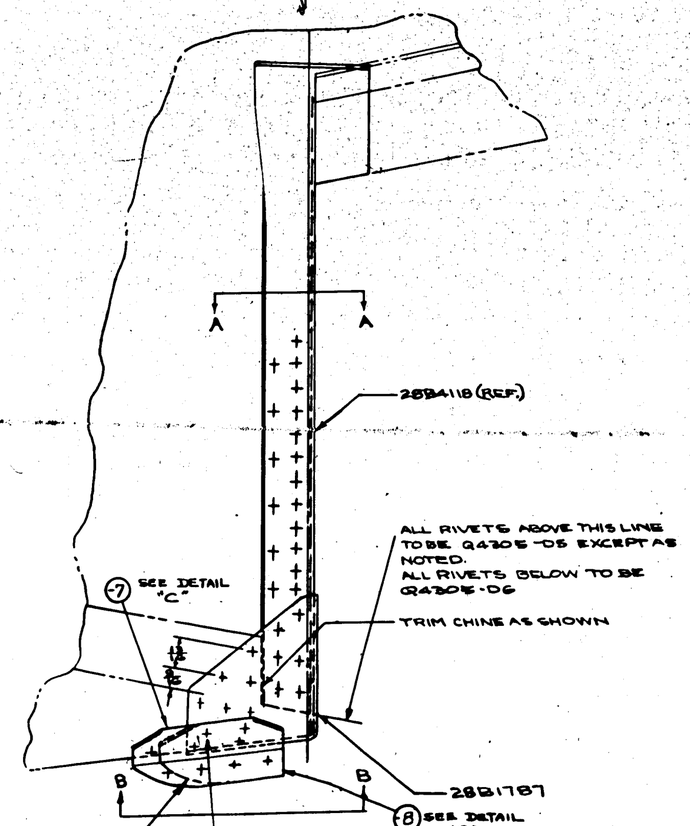
28B4118 (REF.)
ALL RIVETS ABOVE THIS LINE TO BE Q4305-D5 EXCEPT AS NOTED.
ALL RIVETS BELOW TO BE Q4305-D6
(7) SEE DETAIL "C"
TRIM CHINE AS SHOWN
28B1787
(8) SEE DETAIL "C"
(6) 28B1568 -2 ONLY
SCALE: 6"=1'-0"
LOCATE RIVETS FROM 28B1568 ON -2 ASSY.

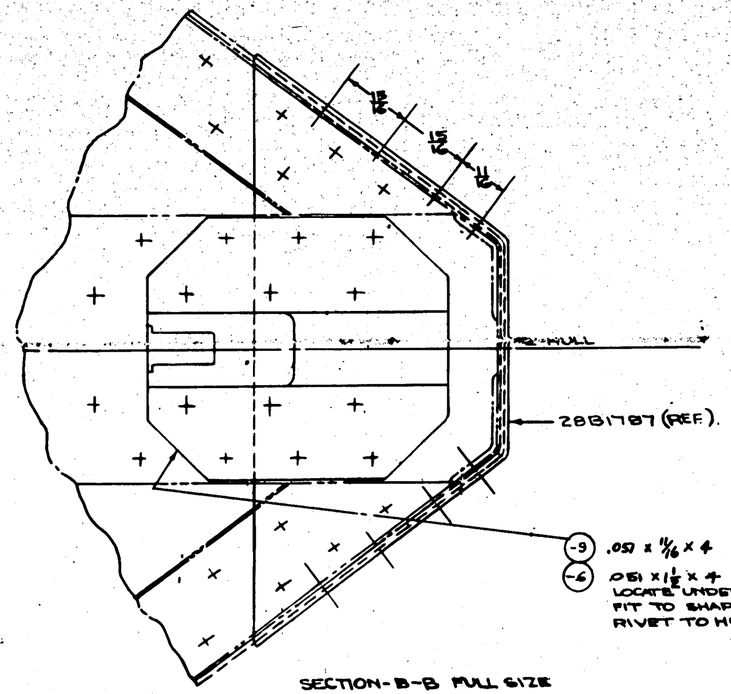
HULL
28B1787 (REF.)
(9) .051 x 1/16 x 4
(6) .051 x 1½ x 4 (APPROX) SPACER LOCATE UNDER FRONT EDGE OF ℄ FIT TO SHAPE OF SKEG ℄. RIVET TO HULL (FLUSH RIVETS)

SECTION-B-B FULL SIZE

-2	PBY-5B	28B4000	1														
-2	PBY-5A	28B5538	1														
-2	PBY-4	28B1000	1														
-2	PBY-3	28B1000	1														
-2	PBY-2	28B1000	1	28B1568													
-2	PBY-1	28B1000	1														
-2	PBY-5	28B1000	1	Q4305-D6													
-2	PBY-5A	28B4000	1	Q4305-D5													
SERV. SECT. SYM.	MODEL	NEXT ASSY.	NO.	28B4118													
REQUIREMENTS PER AIRPLANE				28B1787													
REPLACES 28B1119 OF 1-21-36 CALC BY				28B4119-9 .051 x 1/16 x 4	ALUM. ALLOY 24S-T4 CLAD SHT			–									
REPLACED BY			ACT. BY	-8	ALUM. ALLOY 17ST SHT			–									
LOFT OR TEMPLATE DWG. NO.	SCALE			-7	K9437 x 4	AL. ALLOY 61S AL 43-CLAD T		–									
STAMP PART NUMBER WHERE SHOWN	1/32 NOTED			28B4119-6	.051 x 1½ x 4	AL. ALLOY 24S-T4 AL 43-CLAD T		–									
				PART No.	STOCK	MATERIAL	SPEC.	LH REQ.	RH REQ.	LH REQ.	RH REQ.	LH REQ.	RH REQ.	LH REQ.	RH REQ.	LH REQ.	RH REQ.
				PARTS LIST PER ASSY.				-0		-2		-3		-4		-5	

A C						
NAVY NOTED	W-S	DAVIS				
HEAT TREAT	FINISH	DRAFT	CHECK	STRUCT	MAT.	APPROV.
NAME STEP INST. HULL STA. 7				OPP. HAND	—	
CONSOLIDATED AIRCRAFT CORP. San Diego, Calif.				SIZE G	DWG. NO. 28B4119	

N	ON FACE OF DWG. FOR -3, REPLACED MATERIAL WAS "1X-½ X 1/16 K1298 AL. ALLOY (24ST) SPEC §643" WITH "Y-5-A7T" FOR -5&6, REPLACE MAT'L NOTE "⅜ X ¾ X 1/16 K5401 AL. ALLOY (46ST) SPEC 46A9-COND T" WITH "Y-2-A28T" WT CHG NIL	4-12-43		
P	AT CALL-OUT FOR -3 ADDED "OR, K1298, AL. AL. EXTR., SPEC. QQ-A-354-T." AT CALL-OUTS FOR -5 & -6 ADDED "OR, K5401, AL. AL. EXTR, SPEC. QQ-A-354-T." NO WT. CHG	4-23-43	LARSEN	

	SUPPLIES & EQUIPMENT CLASSIFICATION			
	LET	ALTERATION	DATE	BY
	A	ADDED RIVET NOTES		
	B	-6 WAS ON AFT SIDE OF WEB	7-24-42	[illegible]
	C	FLANGE OF -14 CHGD. TO FWD	7-24-42	[illegible]
	D	OUTBD END OF -5 LAY-RED	7-24-42	[illegible]
E.O. 17130	E	-14L & -14R WAS -14	7-24-42	[illegible]
E.O. 17208	F	-10L & R .030 24ST AL. ALLOY	7-24-42	[illegible]
		WAS .030 & .50 AL. ALLOY		
	G	ADDED -55 ASSY. R. WEB		
		NOTES & REFS.	9-9-42	[illegible]
E.O. 38430	H	NO. RIVETS ATTACH. -7½, -8½, & -9½ FROM (4) TO (8): NO. RIVETS ATTACH. -10½ FROM (6) TO (7):	5-9-41	SALS
PBY-5, 2B-5		L.E. PARTS CALLED ON DWG FACE		
	J	CHGD -7 LER & -11 LAR FROM 24S TO 24ST	4-6-42	[illegible]
E.O.-A31576	K	NOTCHED -13½/E TO CLEAR		[illegible]
		NEW STBINGER WT. CHG. NEG.	4-12-42	[illegible]
E.O.-A47683	L	REVISED REFS FOR 28-SAMN IN		
& E.O.A64483A	M	REFS PER AIRPLANE BLOCK (NO WT. CHG)	7-11-42	STEWART
		CREATED -60½R & -70½R ASS'YS. WT. CHG. NEG.	8-24-42	[illegible]

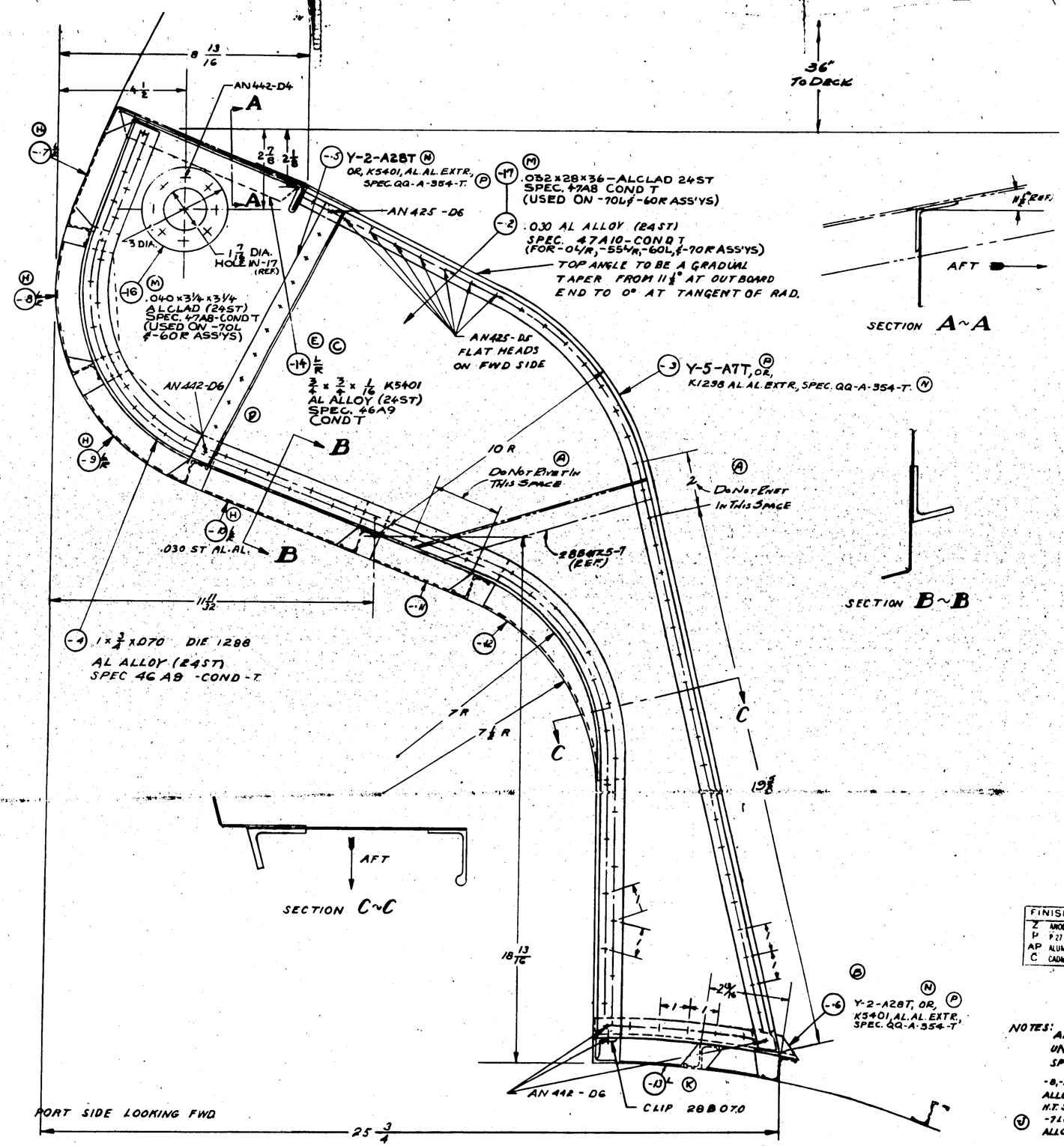

HULL OFFSETS SIMILAR TO 28B003			
A	55 53/64	G	15 11/64
B	70	H	31
C	18 1/64	J	36 11/64
D	46 55/64	L	7 31/32
E	12 5/8	N	35 11/64
F	58 53/64	B'	81 53/64

| | | | |

SUPPLIES & EQUIPMENT CLASSIFICATION			
LET	ALTERATION	DATE	BY
A	[illegible] FOR PBY-5 [illegible]	[illegible]	A/CE
B	CHANGE ALL 2885012 TO 2885012		[illegible]
C	ON FACE MAT'L FOR -10 WAS "AL ALLOY PLATE ANGLE 7/8 x 9/16 x .060 4560 K1559 SPEC. 4649 COND T" FOR -8 MAT'L WAS "AL ALLOY PLATE ANGLE 7/8 x 9/16 x .060 K1559 SPEC. 4649 COND T" FOR -A MAT'L WAS "7/8 x 9/16 x .060 K1559 AL ALLOY PLATE ANGLE SPEC. 4649 COND T" WT CHG [illegible] 1-1-43			[illegible]
D	ADDED ALT. FOR -8 & -9 "K1559 X 32 1/8 AL AL EXT, SPEC.-00-A-354-T." FOR -10 "K1559 X 45 5/8 AL AL EXT. SPEC.-00-A-354-T." NO WT. CHG.	8-19-43	CRAIG

7 RIVETS AN 435-AD5 EQUAL SPACING

(7L) 6 RIVETS EQUALLY SPACED

(6L) PBY-4 ONLY — 2885012 (B)

57 7/8 R — 57 R.

45 1/2

3 RIVETS EQUALLY SPACED — (6R) PBY-4 ONLY — 2885012-R

7 6/16 — 6 1/16

7 RIVETS AN 455 -AD5 EQUALLY SPACED

(7R) 6 RIVETS EQUALLY SPACED

(-10) MAKE FROM Y-5-A5T X 45 5/8, OR (C) K1559 X 45 5/8, AL. AL. EXT., (D) SPEC: 00-A-354-T USE EXISTING BELT FRAME

BELT FRAME 6.6 (-4) SUB ASSEMBLY (PBY-4 ONLY) (-13) SUB ASS'Y.

ALL RIVETS AN 442 -AD5 UNLESS OTHERWISE SPECIFIED

(7L) (7R) .051 AL. ALLOY SPEC. 47A10 COND A W.T. BR 53

1/2 — 1/16 — 7/8 — 1 11/16 — FWD

SECTION A-A

58 29/32 R — 58 1/32 R. — 32

(6L) PBY-4 ONLY — 2885012

(6R) PBY-4 ONLY — 2885012-R

(-9) MAKE FROM (C) (D) Y-5-A5T x 32 1/8, OR K1559 x 32 1/8 AL. AL. EXT, SPEC-00-A-354-T FINISH Z-P-AL

BELT FRAME 6.4 (-3) SUB ASSEMBLY (PBY-4 ONLY) (-12) SUB ASS'Y

RIVETS AN 442-AD5 3 EQUAL SPACING AS SHOWN

59 17/32 R — 58 21/32 R. — 32

2885012 — (4) PBY4 ONLY

(B) 2885012-R — (5R) PBY-4 ONLY

(-8) MAKE FROM (C) Y-5-A5T X 32 1/8, OR (D) K1559 X 32 1/8, AL. AL. EXT, SPEC-00-A-354-T FINISH ZP-AL.

BELT FRAME 6.2 (-2) SUB ASSEMBLY (PBY-4 ONLY) (-11) SUB ASS'Y

℄ OF SHIP

VIEW LOOKING FORWARD

7/8 — 1/8 — 2 3/4 — 3/4 — 90° — 45° — 2 13/16 — 2 13/16 — 11/32 — 1 1/4 — 8"(REF)

ANGLE 2884123 (REF)

DETAIL -6L
SCALE 12" = 1'-0"
MAT. .051 AL ALLOY SPEC. 47A10 COND. T
FINISH: Z-P-GP.

-6R OPPOSITE

PLANES #1241 - #1293 INCL. PBY-4 (29-31)

GP-GREEN PRIME FINISH CODE
Z - ANODIC TREATMENT
P - PRIMER
AP - ALUMINIZED PRIMER
C - CADMIUM PLATE

AN 455-AD5	
AN 442-AD5	
2885012-R	1
2885012	
-7L	1
-7R	1
-10	1
-13 SUB ASSY	1
AN 442-AD5	
2885012-R	1
2885012	
-9	1
-12 SUB ASSY	1
AN 442-AD5	
2885012-R	1
2885012	
-8	1
-11 SUB ASSY	1
AN 455-AD5	
AN 442-AD5	
-10	1
-7R	1
-7L	1
-6R	1
-6L	1
-4 SUB ASSY	1
AN 442-AD5	
-9	1
-6R	1
-6L	1
-3 SUB ASSY	1
AN 442-AD5	
-8	1
-6R	1
-6L	1
-2 SUB ASSY	1

PART NUMBERS								
ASSEM. NO.	MODEL	NEXT ASSY.	LH	RH	LH	RH	LH	RH
REQUIREMENTS PER AIRPLANE			SUB ASSY-13	SUB ASSY-12	SUB ASSY-11	SUB ASSY-4	SUB ASSY-3	SUB ASSY-2
-11	PBY-5A	2884126						
-13	PBY-5A	2884126						
-13	PBY-5A	2884126						
-13	PBY-5	2884126						
-12	PBY-5	2884126						
-11	PBY-5	2884126						
-4	PBY-5	2884126						
-6L	PBY-5	2884126						
-8, -9	PBY-5	2884126						

AC							1-4-39	
NAVY	NOTED	NOTED	NONE	NOTED			STEPHENS	
	MATERIAL	SPEC.	HEAT TREAT	FINISH			DRAFT	CHECK

CONSOLIDATED AIRCRAFT CORP. — INSTALL - BELT FRAMES - HULL STA. 6.2-6.4-6.6 - UPPER ASSEM.

OPP. HAND

SIZE G — 2884124

2884124

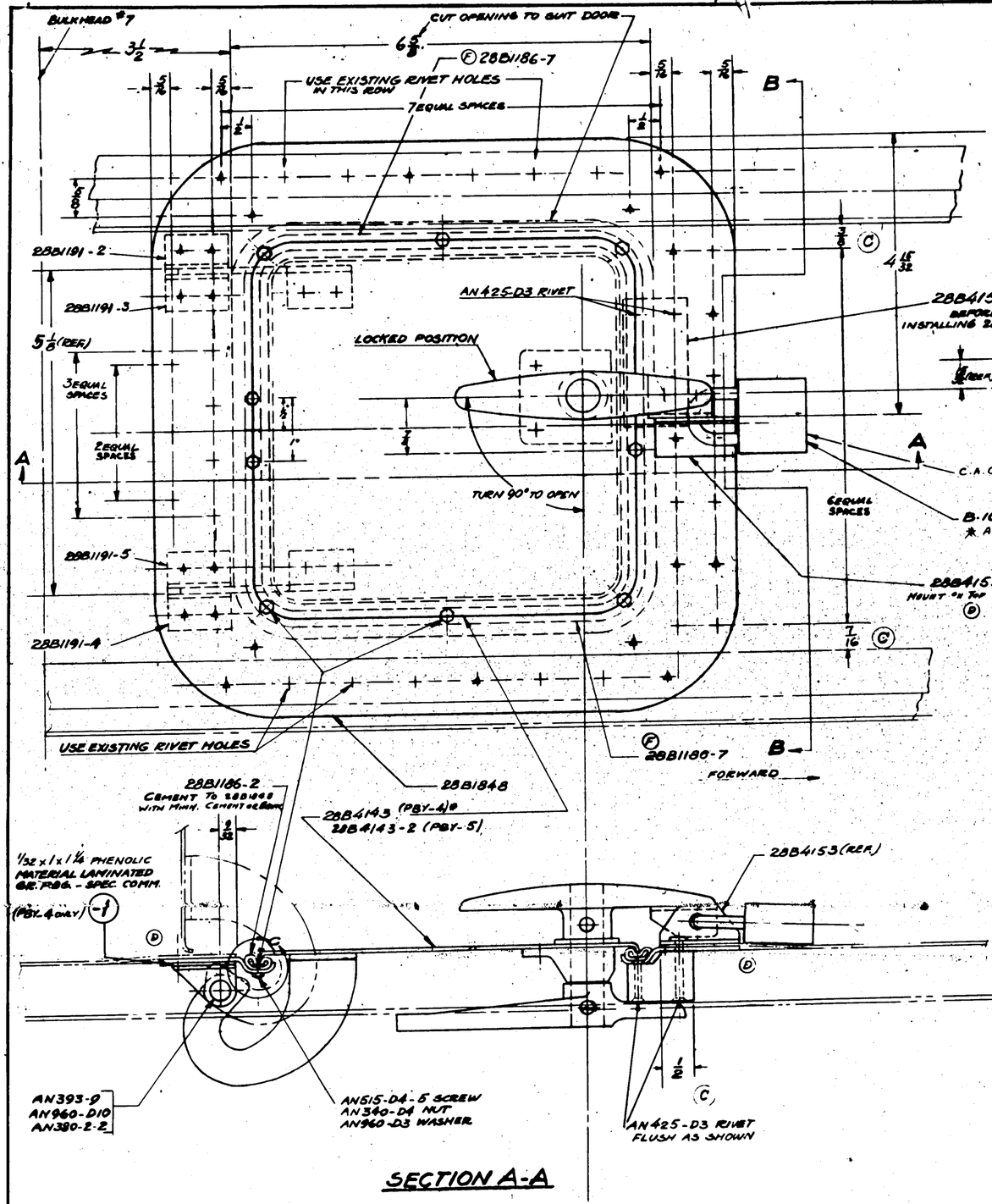

SECTION A-A

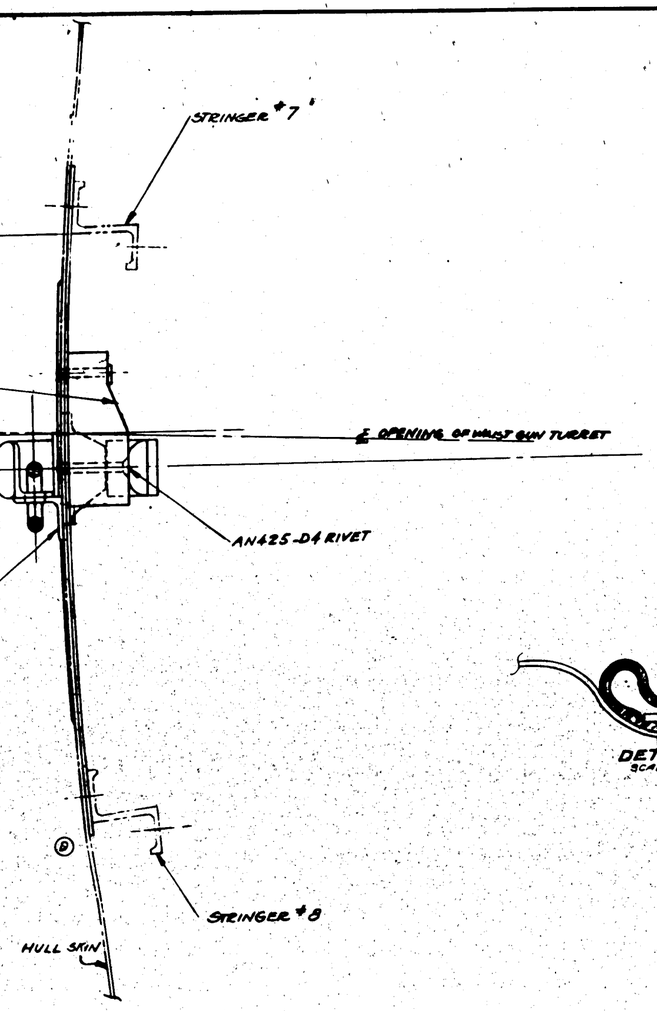

SECTION B-B

SUPPLIES & EQUIPMENT CLASSIFICATION			
LET'	ALTERATION	DATE	BY
A	ADDED: PBY-5 REQUIREMENTS	4-7-39	[illegible]
B	REMOVED: 28B4145 [illegible]	11-2-39	"
C	3/8 WAS 3/4 7/16 WAS 7/8	"	"
	REVERSED DIRECTION OF OPENING DOOR	"	"
	ADDED: 1/2		
D	28B1848 MOUNTED UNDERNEATH SKIN INSTEAD OF ABOVE	10-31-40	CARLS
E	TO DWG. ADDED -6 & DETAIL-C-	7-9-41	[illegible]
	ALSO AN515 D4-5 WAS AN515D4-4	"	"
F	REPLACED -6 WITH 28B1186-7.	4-18-42	[illegible]
G	REPLACED B-103 WITH C.A.C. #102 PADLOCK NO.7 FOR-2 ASS'Y ONLY WITH	1-24-43	[illegible]

Ⓒ 28B1186-2 REF
Ⓔ 28B1186-7 (REF.)

DETAIL-C-
SCALE-NONE

* S.O. 930-37 CONTRACT CHANGE "U"
PLANES #1241-1243 (29-31)

NOTE: THIS INSTALLATION TO BE MADE IN CONJUNCTION WITH 28A4056

L.H. ONLY

ALL RIVETS THRU SKIN TO BE QQ4305 TYPE

+ = RIVETS
= SPOTWELD

ITEM	ARMY NO.	NAVY MODEL	NEXT ASSY.	PART NUMBERS	PARTS PER ASSEMBLY	MAT.	LH REQ'D/ASSEM	RH REQ'D/ASSEM	LH REQ'D/ASSEM	RH REQ'D/ASSEM	LH REQ'D/ASSEM	RH REQ'D/ASSEM	LH REQ'D/ASSEM	RH REQ'D/ASSEM
				AN515-D4-5	8			8						
				AN425-D4	1			1						
				AN425-D4	2			2						
				AN425-D3	2			2						
				AN960-D3	8			8						
				AN340-D3	8			8						
				AN515-D4-4	8									
				AN380-2-2	2			2						
				AN960-D10	2			2						
				AN393-9	2			2						
				CAC #102				1						
				QQ4305-D4										
				28B1186-7				2						
				# B-105 LOCK	1									
				28B4154	1			1						
				28B4143	1			1						
				28B4143-2										
				28B4145	1			1						
-6	28-AMM	28B4126		28B1191-5	1			1						
-5	PBY-5A	28B4126		28B1191-4	1			1						
-5	28-5MC	28B4126		28B1191-3	1			1						
-5	28-5MA	28B4126		28B1191-2	1			1						
-6	28-3MA	28B4126		28B1186-2	1			1						
-6	PBY-5B	28B4126		28B4142-1	2									
-5	PBY-5A	28B4126		PART NUMBERS	PARTS PER ASSEMBLY	MAT.	LH REQ'D/ASSEM	RH REQ'D/ASSEM	LH REQ'D/ASSEM	RH REQ'D/ASSEM	LH REQ'D/ASSEM	RH REQ'D/ASSEM	LH REQ'D/ASSEM	RH REQ'D/ASSEM
1	PBY-5	28B4126												
1	PBY-4	28B4126												

REQUIREMENTS PER AIRPLANE: AC — NAVY NOTED — ARMY NOTED — SPEC. — HEAT TREAT — FINISH

REPLACES — REPLACED BY — 1 REQ — ACCEPTED DATE 3-9-39 — GALS. WT. — ACT. WT. — SCALE 12"-1'-0" — 1/32

CONSOLIDATED AIRCRAFT CORP. SAN DIEGO, CALIF.

3-9-39 SOWTAG — DRAFT — CHECK — EXAM. — ENG.

INSTALL-ACCESS DOOR LOCK-WAIST GUN TURRET

SIZE G — 28B4142

SUPPLIES & EQUIPMENT CLASSIFICATION			
LET	ALTERATION	DATE	BY
A	REMOVED -1 ANGLE	5/10/39	RWS
B	ADDED PBY-5 REQUIREMENTS	11-7-39	[illegible]
C	SECTION A-A REMOVED 3 1/2 W/A WAS 9/16, 1" WAS 15/16	"	"
D	Q4305-D4 RIVET FLUSH INSIDE AT SECTION AA	4/3/40	[illegible]
E	ON FACE OF DWG. AT -2 REPLACED SPEC. "46528" WITH "AN-QQ-S-684 ADDED "T.S. 90,000 TO 125,000#/□" (NO WT. CHG.)	6-5-41	KNOX

E.O. 10072

E.O. 20021

* (PBY-4) 28B4144-R
B (PBY-5) 28B5144-R

Q4305-D4

28B1187-2

℄ HINGE

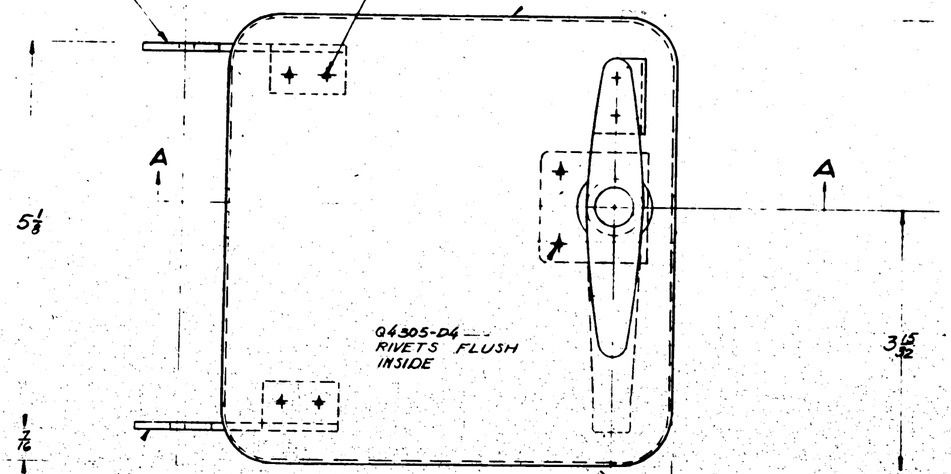

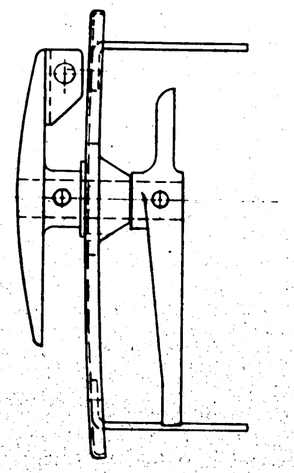

* (PBY-4) 28B4144
B (PBY-5) 28B5144

- 1/16 -

DRILL - 1/2 - IN 28B1187-2

C

- 3/8 - 1 -

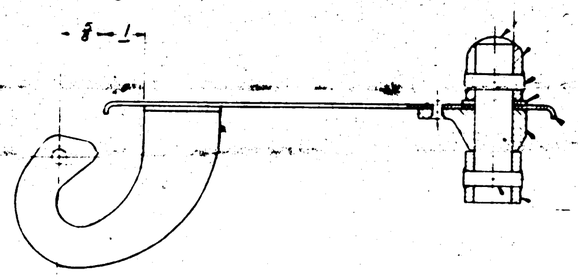

A

SECTION A-A

---28B4155 SHAFT
B. 28B5136 HANDLE (PBY-5)
*28B4156 HANDLE (PBY-4)

(-2) PIN - DRILL 3/16 - LOCATE FROM 28B4156 PEEN ENDS.

AN960-D816 WASHER.

BREAK EDGES.

28B4158 BEARING

28B4157 HANDLE

(-2) 3/16 O.D. C.M. STEEL BAR. 13/16 LONG
SPEC. AN-QQ-S-684, T.S. 90,000 TO 125,000#/□"
PEEN ENDS
DRILL 3/16 - LOCATE FROM 28B4157

NOTE: SHAFT MUST TURN FREELY
INSTALL HANDLES WITH WET PRIMER

FINISH CODE
Z ANODIC TREATMENT
P PRIMER
AP ALUMINIZED PRIMER
C CADMIUM PLATE

PBY-4 S.O. 930-37 CONTRACT CHANGE "U"
PLANES #1241-1243 (29-31)

PART NUMBERS	LH	RH	LH	RH	LH	RH	LH	RH	LH	RH
28B5144-R			1							
28B5144			1							
28B4143-2	2		2							
Q4305-D4	6		6							
28B3136			1							
28B1187-2	1		1							
28B4158	1		1							
28B4157	1		1							
28B4156	1									
28B2185	1		1							
28B4144-R	1									
28B4144	1									
PARTS LIST PER ASSEMBLY MAT.	REQ/ASSEM -0		REQ/ASSEM -3 (B)							

ASSEM. NO.	MODEL	NEXT ASSY.
-5	28-5AM	28B4142
-4	28-5MC	28B4142
-0	28-5MN	28B4142
-3	28-5ME	28B4142
-5	28-5MC	28B4142
-5	28-5MA	28B4142
-3	PBY-5A	28B4142
-3	PBY-5B	28B4142
-3	PBY-5	28B4142-2
-0	PBY-4	28B4142

REQUIREMENTS PER AIRPLANE

REPLACES

REPLACED BY

3 LIMIT ON DIMENSIONS UNLESS OTHERWISE SPECIFIED 1/32

(PBY) 3-14-39 APPROVED DATE

GALC. WT. ACT. WT.

SCALE 12 1/2"=1'-0"

AC
NAVY NOTED NOTED Z-P
MATERIAL SPEC. HEAT TREAT FINISH

DRAFT CHECK STRAM. ENG

2-28-39 SOVITALE

OPP. HAND

CONSOLIDATED AIRCRAFT CORP. SAN DIEGO, CALIF.

DOOR - ACCESS - LOCK - REAR GUNNER'S SHIELD L.H.

SIZE G 28B4143

= SPOTWELD

SUPPLIES & EQUIPMENT CLASSIFICATION			
LET	ALTERATION	DATE	BY

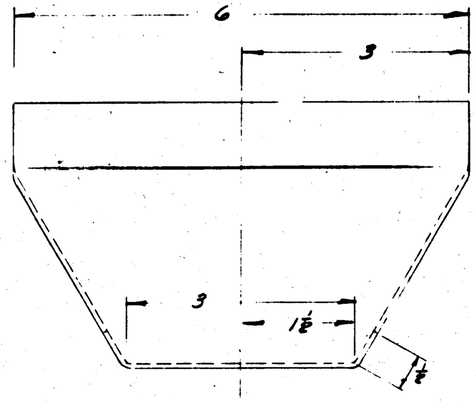

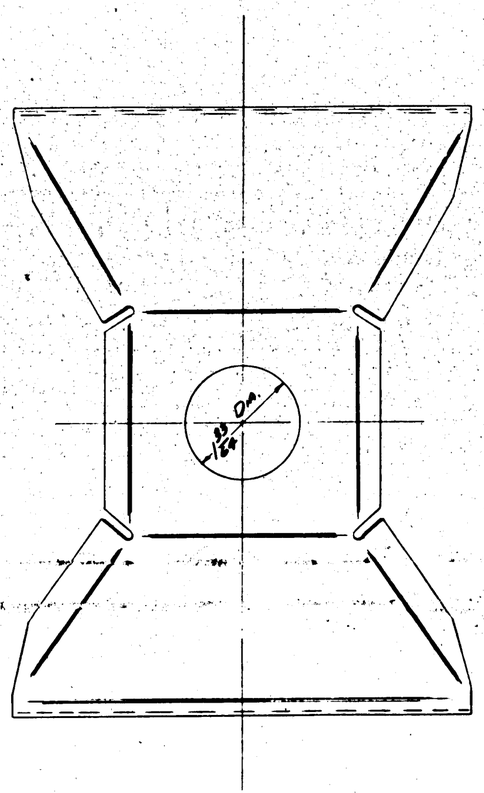

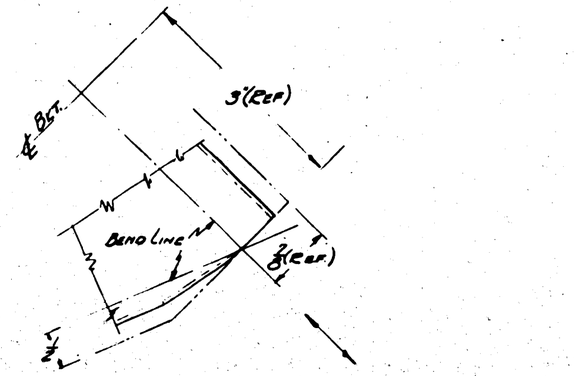

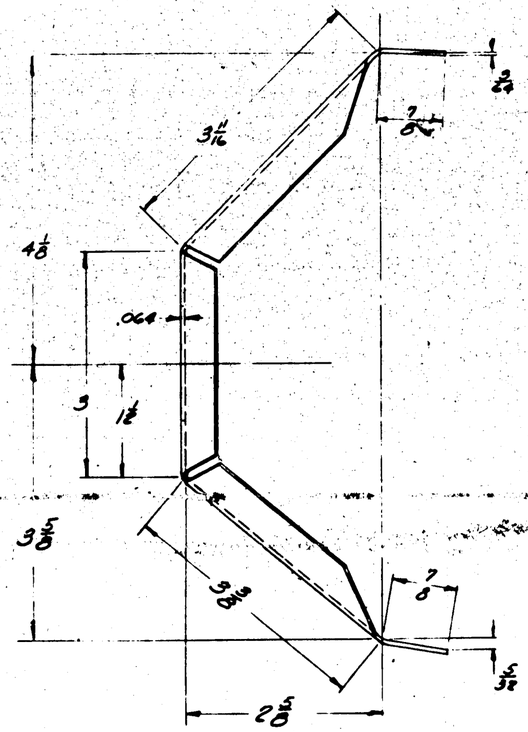

BEND RADII 3/32

GP GREEN PRIME
FINISH CODE

Z	ANODIC TREATMENT
P	ZINC PRIMER
AP	ALUMINIZED PRIMER
C	CADMIUM PLATE

PART NUMBERS	LH	RH	LH	RH	LH	RH	LH	RH	LH	RH
PART ONLY										
BOD/ASSEM										
PART ONLY										
BOD/ASSEM										
PART ONLY										
BOD/ASSEM										
PART ONLY										
BOD/ASSEM										
PART ONLY										
BOD/ASSEM										

ASSEM. NO.	MODEL	NEXT ASSY.	REQUIREMENTS PER AIRPLANE

P8Y-1A	2884130	1				
P8Y-1B	2884130	1				
P8Y-1	2884186					
P8Y-1	2884150					

REPLACES		3-26-39 ACCEPTED DATE
REPLACED BY		GALC. WT. / ACT. WT.
± 1/32 UNLESS OTHERWISE SPECIFIED		SCALE

MAT.	SPEC.	HEAT TREAT	FINISH	DRAFT	CHECK	EXAM.	ENG.
AC				CANTRELL			
NAVY AL. ALLOY	57678 CONSOL	3E-53	2-P-GP	3-8-39			R

CONSOLIDATED AIRCRAFT CORP. SAN DIEGO, CALIF.

BRACKET-HULL: WAIST GUN SNUBBING POST SUPPORT

OPP. HAND

SIZE G | 28B4148

SUPPLIES & EQUIPMENT CLASSIFICATION			
LET	ALTERATION	DATE	BY
A	FROM APPROX 4" TO APPROX 7 1/2"	10/30/38	RWS
B	WAS LOCATED ABOVE STR. 725	1/5/39	RWS
C	FROM APPROX. 7 1/2 TO APPROX. 4 1/2	1/5/39	RWS
D	ADDED -50 ASSY. & 28B1931-5	1/20/39	RWS
E	ON FACE OF DWG. CALLOUT 28B1880 -4 OUTSIDE OF 28B1876-4 WAS SHOWN INSIDE. 28B1876-4 WAS SHOWN OUTSIDE. NO WT. CHG.	9-15-43	WEC

E.O. 10073
E.O. 18903
E.O. 27398
E.O. 15466

28B1875-3 HOSE
AC743-1B HOSE CLAMP.

12" APPROX.

28B1931-5 (B)-(D)
RIVET Q4305-D4
BRAZIER HD'S OUTSIDE
NOTE: "FOR -50 ASSY."

28B1931
RIVET Q4305-D4
BRAZIER HDS. OUTSIDE
NOTE: "FOR -0 ASSY."

4 x .022 x 12"LG (APPROX) (2)
SPEC 44T19 TEMPER 1/2 H

VIEW SHOWING COMPLETE INSTALLATION R.H. SIDE LOOKING FWD.
SCALE 3" = 1'-0"

AN442-D5
6-RIVETS EQUALLY SPACED TOP & BOTTOM

STRINGER #28B1000-712

28B4148

28B1882

28B4146

Q4305-D4
BRAZIER H'D OUTSIDE.

AN425-D4
C'SNK OUTSIDE

AC525-10-3

28B4147-2

AN442-D4

AN442-D4

28B4147-3

(E) 28B1880-4
28B1876-4
28B1882-2
28B2883

STRINGER #28B1000-714

© 4 1/2 APPROX. (A)

℄ BULKHD #7

ASSEM. NO.	MODEL	NEXT ASSY.	PARTS LIST PER ASSEMBLY	PART NUMBERS	LH	RH	LH	RH	LH	RH	LH	RH	LH	RH
					SEE ADDED	SEE ADDED	SEE ADDED	SEE ADDED	SEE ADDED	SEE ADDED	SEE ADDED	SEE ADDED	SEE ADDED	SEE ADDED
			REQUIREMENTS PER AIRPLANE	MAT.	-0	-50 (D)								
-50	28-5AN4	28B4128	1	AC743-1B	4	-	4	-						
-50	28-5AMC	28B4126	1	AC525-10-3	1	-	1	-						
-50	28-5MN	28B4128	1	AN442-D4	-	1	-	1						
-50	28-5ME	28B4128	1	AN425-D4	-	1	-	1						
-50	28-5MG	28B4128	1	Q4305-D4	-	1	-	1						
-50	28-5MA	28B4128	1	AN442-D5	-	1	-	1						
-50	P&Y-5A	28B3122	1	28B2883	1	-	1	-						
-50	P&Y-5B	28B3122	1	28B1876-4	1	-	1	-						
-50	P&Y-5	28B4126	1	28B1880-4	1	-	1	-						
-50	P&Y-5	28B4126	1	28B1882-2	1	-	1	-						
				28B1000-2	1	1	1	1						
				28B1931	1	1	1	1						
				28B1931-5	1	1	1	1						
				28B4147-2	1	-	1	-						
				28B4147-3	-	1	-	1						
				28B4148	1	-	1	-						
				28B4146	1	-	2	-						
				28B4150-2	1	1	1	1						

REPLACES

REPLACED BY

APPROVED DATE 3-6-39
A.N.S.

SCALE

GALC. WT. — ACT. WT. — LOFT NO. & NOTED

AC
NAVY NOTED | NOTED | NONE | NONE
MATERIAL | SPEC. | HEAT TREAT | FINISH

CONSOLIDATED AIRCRAFT CORP. SAN DIEGO, CALIF.

INSTALLATION - HULL - WAIST GUN SNUBBING POST R.H. SIDE

CLAYTON 5-1-39
DRAFT | CHECK | EXAM. | ENG.
OPP. HAND

SIZE G | 28B4150

28B4150

E.O. NO.	LIST	ALTERATION	DATE	BY
	A	ADD -7 & -8 DIM 3 1/2 FOR PARTS ON, & PARTS ON & SPARES & FUTURES. W/ CH NES.		
E.O. "A" 93634	B	REMVD -3 & -4 DIM 4" & NOTE "FOR---FUTURES" IN END VIEW. REMVD. NOTE "FOR---FUTURES" IN DET. -7 & IN DET. -8. NO WT. CHG	8-10-42 1-13-43	

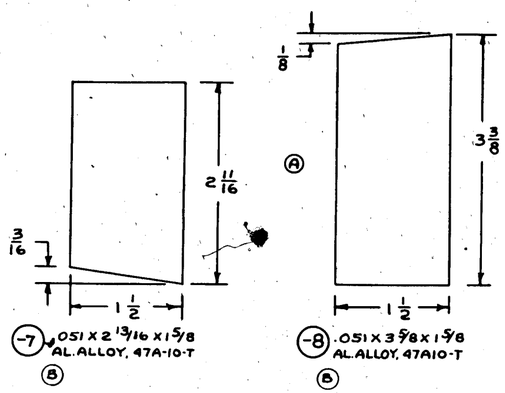

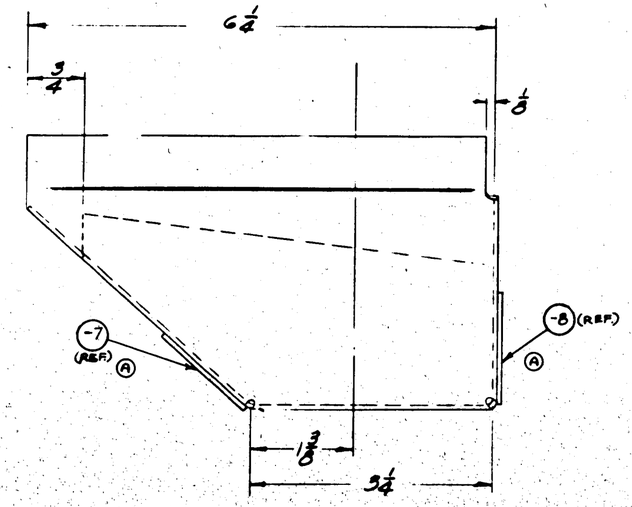

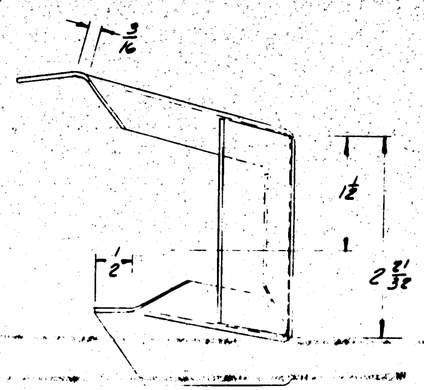

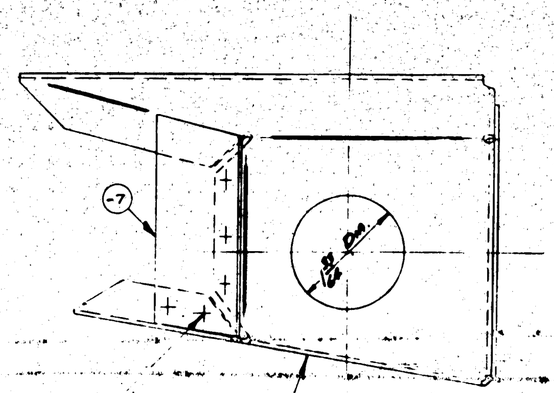

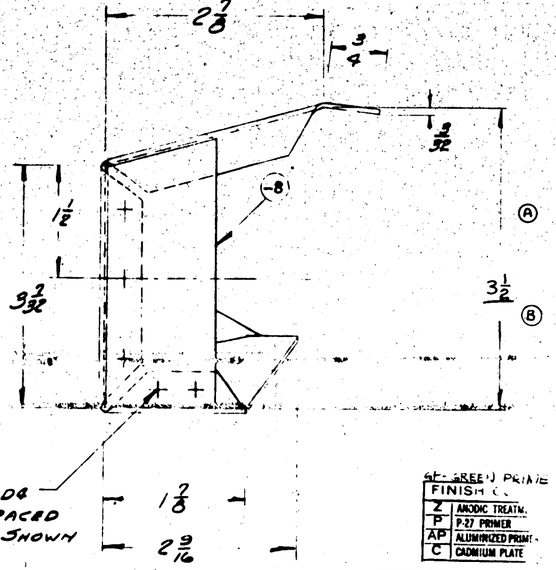

PLANES #1841-1843
(29-31)
S.O. 930-37
CONTRACT CHG. "U"

FINISH (SEE SPEC.) PRIME	
Z	ANODIC TREATM.
P	P-27 PRIMER
AP	ALUMINIZED PRIMER
C	CADMIUM PLATE

ASSEM. NO.	MODEL	NEXT ASSY	PART NUMBERS	LH	RH	LH	RH	LH	RH	LH	RH	LH	RH
			AN442-D4	10									
			(SEE DETAIL) -8	1									
			(SEE DETAIL) -7	1									
			28B4131-2	1									
	PBY-5A	28B4152											
	PBY-5	28B4152											
	PBY-4	28B4152											
	28-5AM	28B4152											
	28-5ME/MF	28B4152											
	28-5ME/MN	28B4152											
	28-5AMK	28B4152											
	28-5AMN	28B4152											

REQUIREMENTS PER AIRPLANE — PARTS LIST PER ASSEMBLY — MAT.

REPLACES — APPROVED DATE 3-8-39 — W.O.

REPLACED BY — CALC. WT. — ACT. WT. — SCALE 1/2 FULL SIZE

AC

NAVY NOTED | NOTED | NOTED | Z-P-[illegible]GP

MATERIAL | SPEC. | HEAT TREAT | FINISH

CONSOLIDATED AIRCRAFT CORP. SAN DIEGO, CALIF.

BRACKET-HULL-WAIST GUN SNUBBING POST-L.H.

CLAYTON 9-339 — DRAFT | CHECK | EXAM. | ENG.

OPP. HAND

SIZE G — 28B4151

SUPPLIES & EQUIPMENT CLASSIFICATION			
LET	ALTERATION	DATE	BY
A	REPLACED 28B2883 WITH -3 28B4152-3.	6-25-43	
B	ADDED DRAIN HOLE LOCATION	8-31-43	GFA
C	CHANGED CRES. PLTD. ONLY. 28B1882. ADDED TO LIST. ONLY 28B4131. SPEC. NO. -5 WAS MA-208. ADDED. NOTE TO -5. ADDED. DEV.-C REQ.	1-5-44	MS
D	28B1882-2 WAS 28B1882. 4¼ WAS 4½	9-24-44	CELLO
E	ON FACE OF DWG. DIM. 7/16 WAS 4¾. WT. CHG. NEG.	8-10-45	PMR
F	ON FACE OF DWG. CALL-OUT 28B1884-4 OUTSIDE OF 28B1876-4 WAS SHOWN INSIDE. 28B1876-4 WAS SHOWN OUTSIDE. NO WT. CHG.	9/15/53	MAGEE

E.O. 18696
E.O. A51181

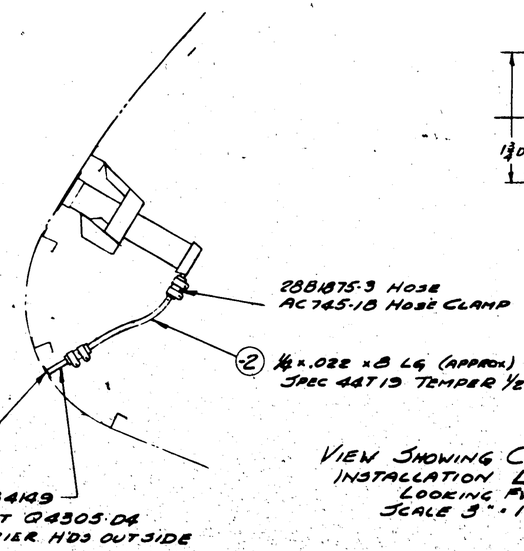

VIEW SHOWING COMPLETE INSTALLATION L.H. SIDE LOOKING FWD.
SCALE 3" = 1FT 0"

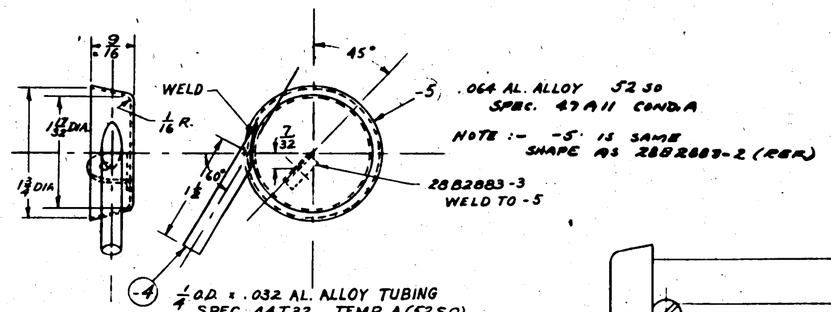
45°
WELD
1/16 R.
-3 .064 AL. ALLOY 5250
SPEC. 47A11 CONDA
NOTE :- -5 IS SAME SHAPE AS 28B2883-2 (REF)
28B2883-3 WELD TO -5
-4 ¼ O.D. x .032 AL. ALLOY TUBING
SPEC. 44T32 TEMP. A(5250)

(A) -3 SUBASSEMBLY

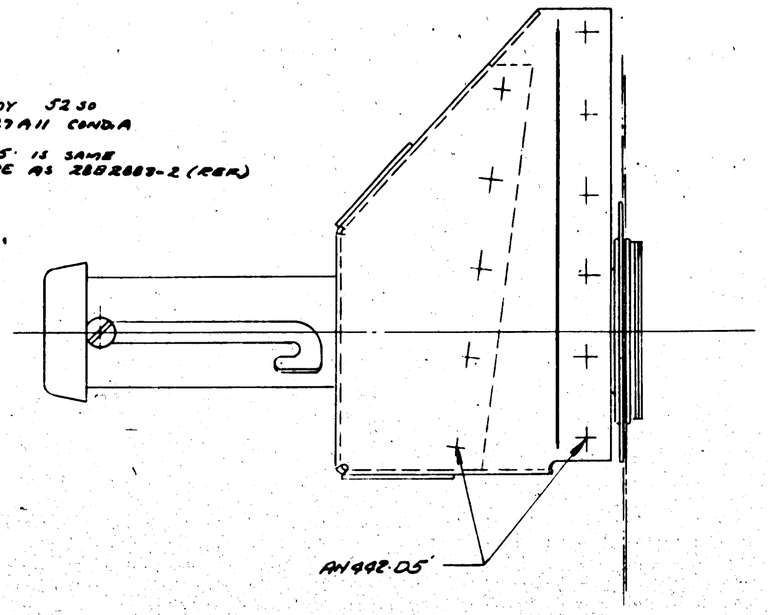

LOCATE DRAIN HOLE IN SKIN APPROX. 1½" AFT OF STA. #6.8, BETWEEN STRINGERS #720 & #722 (B)

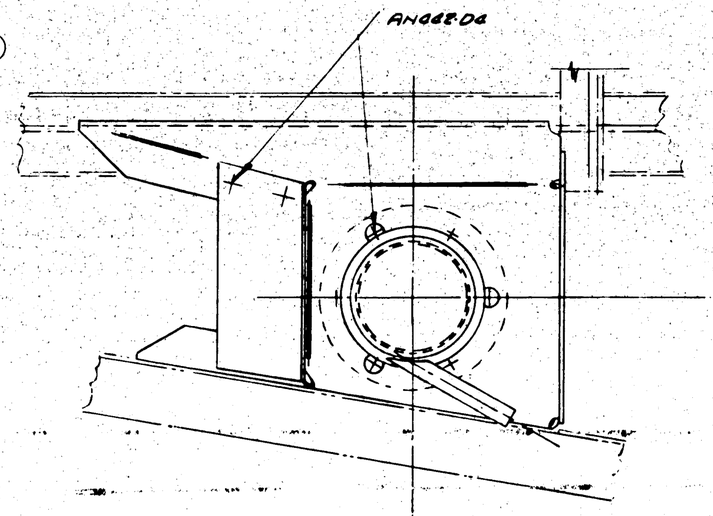

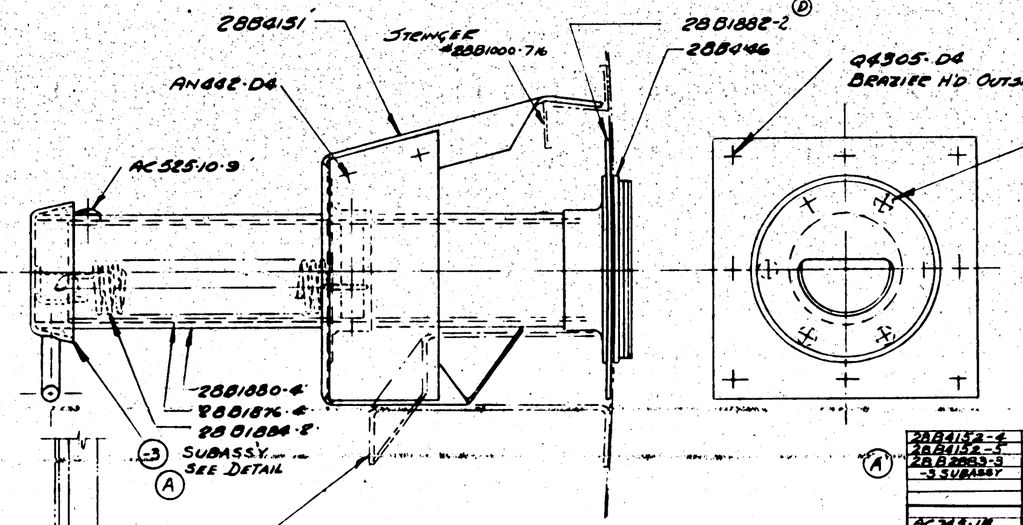

* PLANES #1241-1243 (29-31)
J.O. 930-37
CONTRACT CNG. "U"

ASSEM. USE	MODEL	NEXT ASSY.	PART NUMBERS	LH	RH	LH	RH	LH	RH	LH	RH	LH	RH
			PARTIALLY ASSEMBLY	REQ/ASSEM	REQ/ASSEM	REQ/ASSEM	REQ/ASSEM	REQ/ASSEM	REQ/ASSEM	REQ/ASSEM	REQ/ASSEM	REQ/ASSEM	REQ/ASSEM
			MAT.										
28-SMC			28B4152-4	1									
POY-5A			28B4152-3	1									
28-SMH			28B4152-5	1									
28-SMC			28B1880-4	1									
28-SMC			28B1876-4	1									
28-SMC			28B1875-3	2									
28-SMA			28B4152-3	1									
POY-5A			28B4131	1									
POY-5	28B4126		28B4149	1									
POY-5	28B4126		28B4152-2	1									

(A')

28B4152-4	1
28B4152-3	1
28B2883-3 -3 SUBASSY	1
AC743-18	4
AC525-10-9	1
AN442-D5	-
AN442-D4	-
AN425-D4	-
Q4305-D4	-
28B4146	1

REQUIREMENTS PER AIRPLANE				
AC				
NAVY NOTED	NOTED	NONE	NOTED	
MATERIAL	SPEC.	HEAT TREAT	FINISH	

REPLACES
REPLACED BY
† USED ON AIRCRAFT BUILDERS SPECIFIED
APPROVED DATE 2-4-43
CALC. WT. ACT. WT.
SCALE 12"=1FT 0"

CONSOLIDATED AIRCRAFT CORP. SAN DIEGO, CALIF.

INSTALLATION - HULL - WAIST GUN SNUBBING POST L.H. SIDE

CRAYTON 2-7-43
DRAFT CHECK EXAM. ENG.
OPP. HAND
SIZE G 28B4152

E.O. 33014

SUPPLIES & EQUIPMENT CLASSIFICATION			
LET	ALTERATION	DATE	BY
A	ADD ALCLAD ALLOY SHT. SPEC 2020 AL. ALLOY	4-19-41	[illegible]

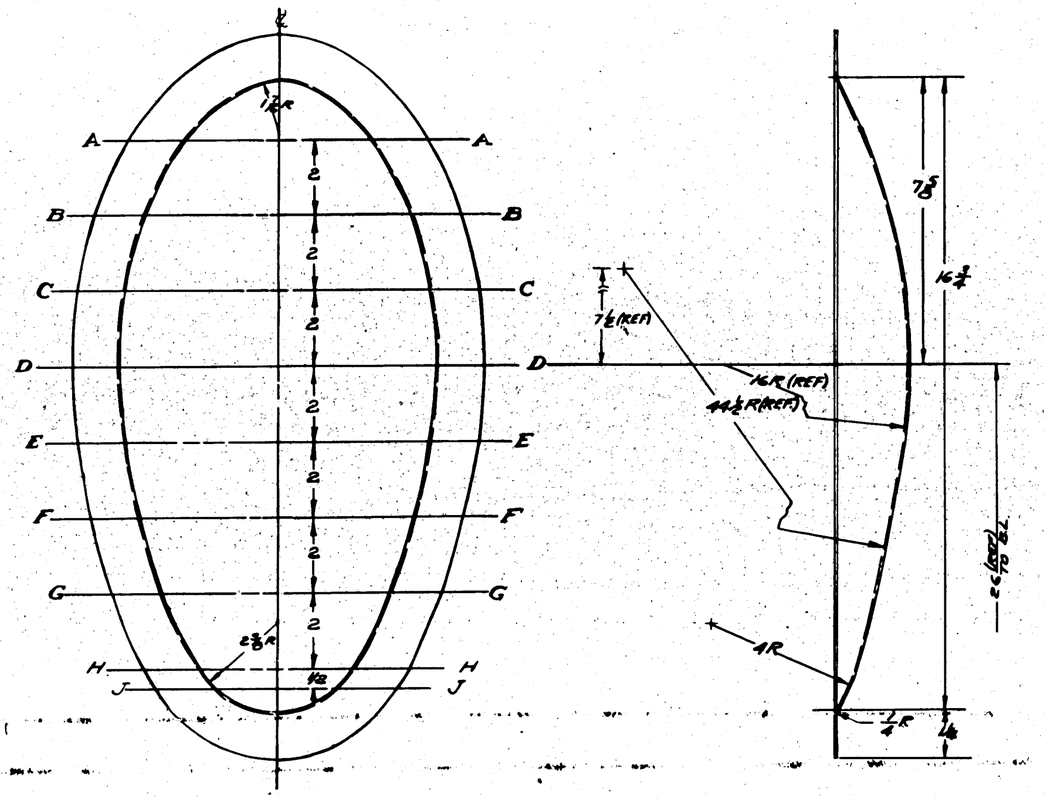

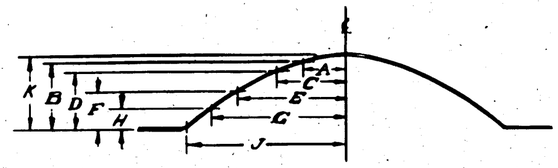

SEC	A	B	C	D	E	F	G	H	J	K
AA	—	—	—	—	—	—	1 1/4	1/32	2 1/4	2 5/32
BB	—	—	—	—	1 3/16	1/32	2 3/16	1/32	3 3/16	1 3/16
CC	5/16	1 25/32	1 3/16	1/32	2 3/16	1/32	3 3/16	1/32	4 3/32	1 3/16
DD	1/32	1 25/32	1 3/16	1/32	2 3/16	1/32	3 3/16	1/32	4 1/8	1 3/16
EE	5/16	1 25/32	1 3/16	1/32	2 3/16	1/32	3 3/16	1/32	4 3/32	1 3/16
FF	—	—	—	—	1 3/16	1/32	2 3/16	1/32	3 3/16	1 3/16
GG	—	—	—	—	5/16	1/32	2 3/16	1/32	3 3/16	1 11/16
HH	—	—	—	—	—	—	1/2	1/32	2	9/16
JJ	—	—	—	—	—	—	1 3/16	1/32	1 3/16	13/32

FINISH

Z	ANODIC TREATMENT
P	P-37 PRIMER
AP	ALUMINIZED PRIMER
C	CADMIUM PLATE

REPLACES: I.A.S. 340-29 — SUPERSEDED BY: —

PART OF ASSEMBLY: 1/32 — UNLESS OTHERWISE SPECIFIED

PART NO. 2B34161 — NEXT ASSY. — USED ON: 6-110 — QUAN. REQUIREMENTS PER AIRPLANE: 2

PART NUMBERS: LH 2B34161 — RH —

MATERIAL: SPEC. ALCLAD SHT. 2020 — COND. A — HEAT TREAT: SR53 COND. T — FINISH: Z-P-AL

NAME: CONSOLIDATED AIRCRAFT CORP. SAN DIEGO, CALIF.

DRAWN: J-20-39 — CHECKED: LOC — APPROVED: —

TITLE: COVER-HULL-NOSE WHEEL WELL BULK'D #2

GOV. NO.: NONE

SIZE: C — DWG. NO.: 2B34161 — REV: R

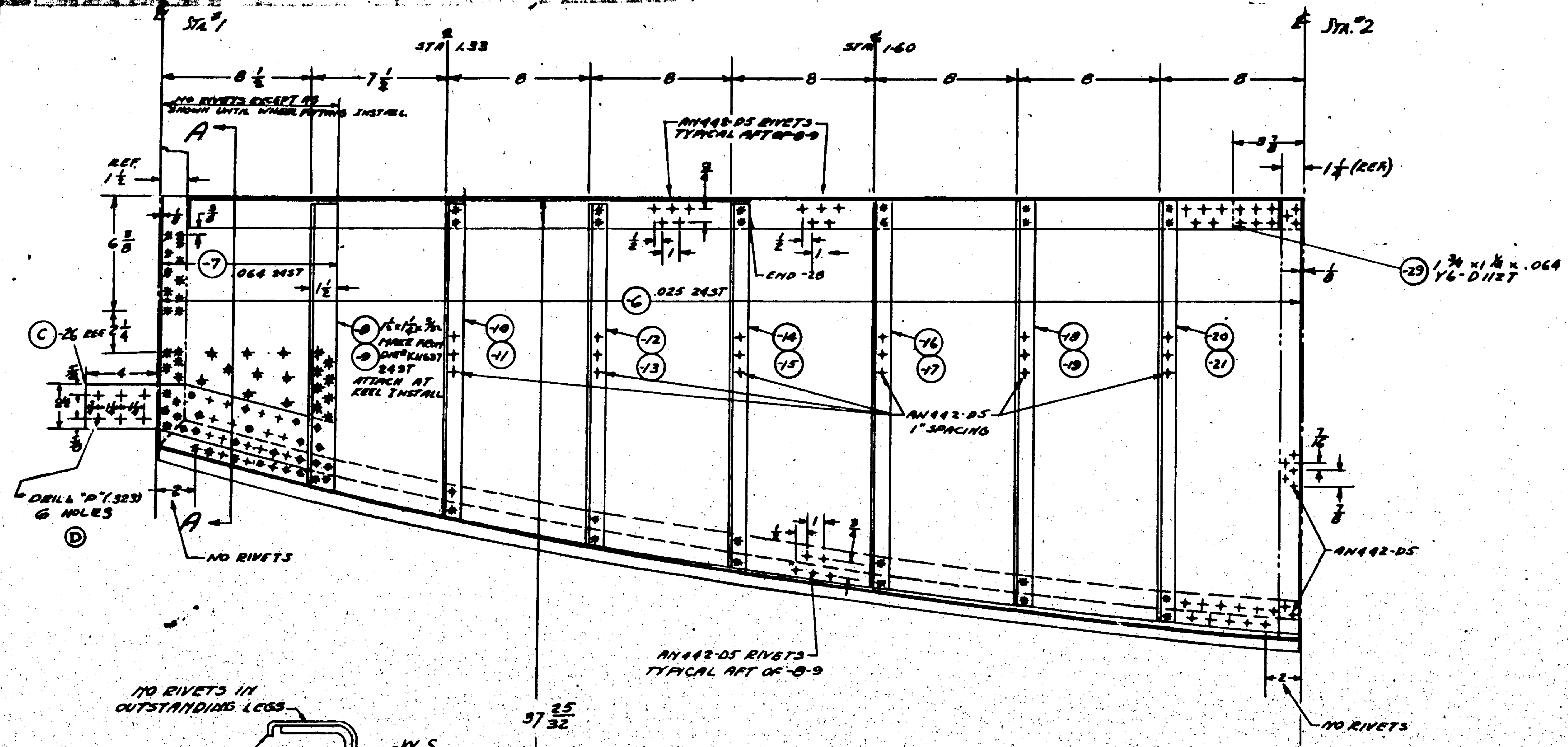

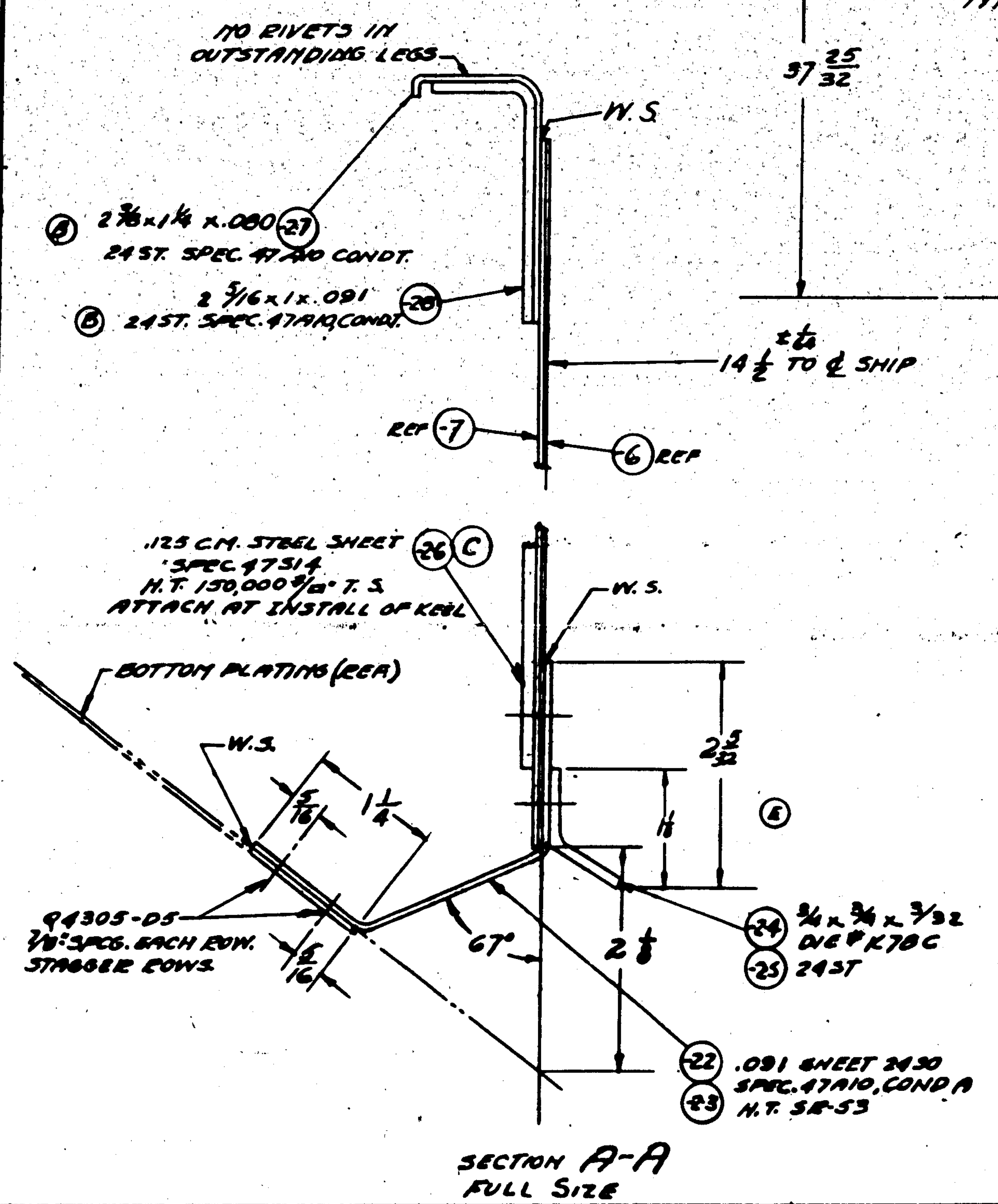

SECTION A-A
FULL SIZE

-10 TO -21 INC. MADE FROM 1 x 1 x 1/16 ANGLE, DIE # K78J 24ST SPEC 46A9 COND. T.

SUPPLIES & EQUIPMENT CLASSIFICATION

	LET	ALTERATION	DATE	BY
	A	-7 WAS .090 24ST.		
		RIVETS ABOVE -26 IN BULK.		
		ANGLE & -8-9 WERE AN442-D5		
EO 10039	B	TOP OF KEEL RAISED 3/8		
		BY CHANGING SIZE &		
		LOCATION OF -27 & -28	5-23	WSM
	C	WIDTH OF -26 INCREASED		
		1" ALONG UPPER EDGE. ONE		
EO 10019		5/16 RIVET ADDED TO	5-23	WSM
		FORWARD END		
	D	LOCATED HOLES FOR ATTACHING	5-23	WSM
EO 11471	E	REMARKED -24 -25 AS SHOWN	11-29	WSM

GP - GREEN PRIME

FINISH CODE

Z	ANODIC TREATMENT
P	P-27 PRIMER
AP	ALUMINIZED PRIMER
C	CADMIUM PLATE

PART NUMBERS	LH	RH	LH	RH	LH	RH	LH	RH	LH	RH
-29	1	1								
-28	1	1								
-27	1	1								
-26	1	1								
-25		1								
-24	1									
-23		1								
-22	1									
-21		1								
-20	1									
-19		1								
-18	1									
-17		1								
-16	1									
-15		1								
-14	1									
-13		1								
-12	1									
-11		1								
-10	1									
-9		1								
-8	1									
-7	1	1								
-6	1	1								
PARTS LIST PER ASSEMBLY	REQ/ASSEM		REQ/ASSEM		REQ/ASSEM		REQ/ASSEM		REQ/ASSEM	

ASSEM. NO.	MODEL	NEXT ASSY.	
-25	PBY5A	28B5521	1
-22	PBY5A	28B5521	1
	PBY-5A	28B4222	

REQUIREMENTS FOR AIRPLANE

REPLACES	SAPC-4-14-39 APPROVED DATE
REPLACED BY	CALC. WT. / ACT. WT.
SCALE	3" = 1'-0" & NOTED

MATERIAL	SPEC.	HEAT TREAT	FINISH	DRAFT	CHECK	EXAM.	ENG.
NOTED	NOTED	NOTED	Z-P-Z GP	MOHR			

4-7-39 | 40°

CONSOLIDATED AIRCRAFT CORP. SAN DIEGO, CALIF.

TWIN KEEL - HULL
STATION #1 TO #2 AMPH.

OPP. HAND

G 28B4164

LET	ALTERATION	BY	CHK
A	DRAWING REVISED AND REQM'TS. MEET NAVY. PROP. PBY-5A SDS AMC & QAU-1 ADDED		
B	NOTE ADDED	11-13-39	
C	NOTE ADDED TO LOCATE HOLES	11-27-39	
D	ADDED TO FACE OF DWG & BM 2884165-3 (-)	12-9-39	
E	CHANGED -A4-B FROM YS-DSBT TO K78Y	2-2-40	
F	CHANGED -B19 FROM K-78Y TO 2024 ALCLAD SECTION A-A ADDED	2-5-41	
G	CUTOUT & DIMS. ADDED	4-3-41	
H	BOLTS SUBSTITUTED FOR RIVETS & NOTES ADDED AS AN3C PASS. RIVETS ARE 2 SHANK TO BM	7-17-41	
J	AN24-BA WAS AN526-DD428-9 AC365-D428(B) WAS 24) ADDED AC364-428(H) WT. CHG. NEG	4-4-42	
K	ON-6&7, 18-443T WAS YB-D43T NO WT. CHG.	4-3-42	
L	ADDED -50 AS "X" 2884165-10 -NEG. WT. CHG.	7-29-42	

E.O. 21985
E.O. 29681
E.O. 28612
PBY-5A 09-10
E.O. 28417
PBY-4A, 09-10
ZA330704

E.O. 36998 A
PBY-5A 09-10 &
28-09MC.

E.O. A6816

E.O. A52835

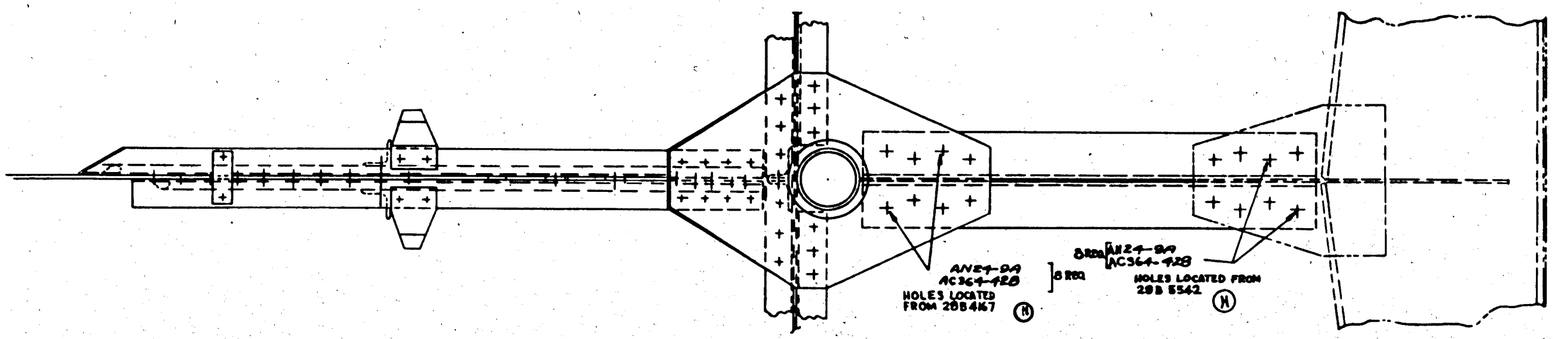

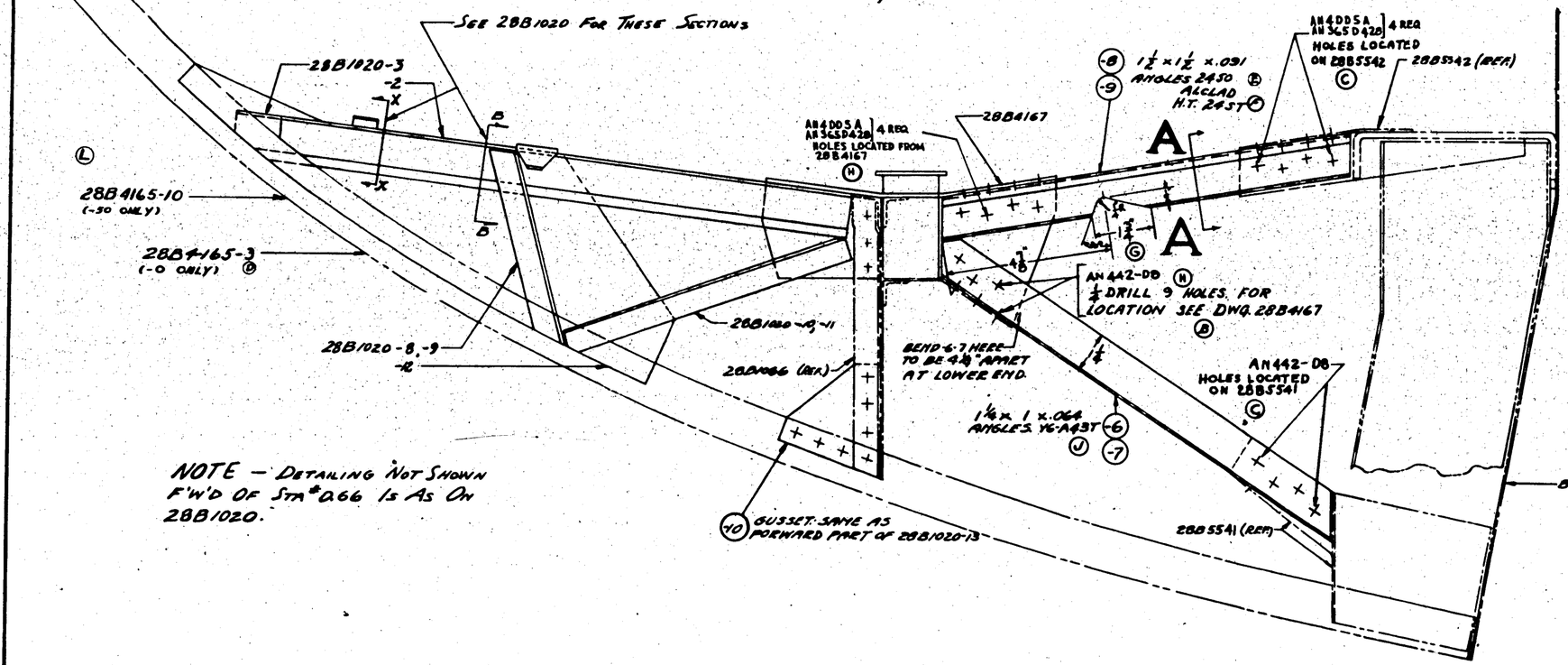

NOTE – DETAILING NOT SHOWN F'W'D OF STA 0.66 IS AS ON 2881020.

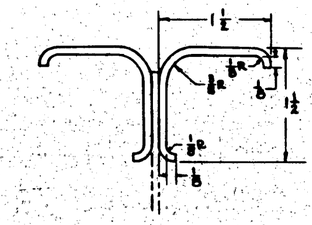

SECTION A-A
SCALE 12" = 1'-0"

NOTE:
INSULATE ALL DISSIMILAR MAT'LS. WITH NEOPRENE OR EQUIVALENT.

AC365-D428	D	B
AN24-BA	⅛	⅛
AC364-428	⅛	⅛
AN4DD5A	A	B
AN442-DD		
AN442-D8		
AN365-D5		
AN960-D5	8	8
AN1004-D5	2	2
2884166-6	2	
2884166-2	2	
2884165-2	1	1
2884½	2	2
2884139	1	1
2884167	1	1
2884165-10		1
2881020-12	1	1
-11	1	1
-10	1	1
-9	1	1
-8	1	1
-6	1	1

Z ANODIC TR. AL.
P P-7Z PRIMER
AP ALUMINIZED PRIMED
C CHROMIC PLATE

CONT'D FROM SH 1

CONT'D FROM 30496, 77713 & 88476 SH 1

-50	PBY-5A	2885500	1					2881020-2	1		
		AN4DMM	2885500					2884165-3	1		
								-10	1		
								-9	1		
		28B AMC	2885500					-8	1		
-0	PBY-5A	2885500	1					-7	1		
	PBY-5A	2885500	1					2884166-6	1		
ASSEM. USE	MODEL	NEXT ASSY		PART NUMBERS PER ASSEMBLY				LH	RH	LH	RH
				REQUIREMENTS PER AIRPLANE				SUB/ASSEM		SUB/AS	-50

AC					
NAVY NOTED	NOTED	24ST-A 20-53	2-P-AP	4-28-39	LOC
MATERIAL	SPEC.	HEAT TREAT	FINISH	DRAFT	CHECK
CONSOLIDATED AIRCRAFT CORP. SAN DIEGO, CALIF.	SUPPORT, – HULL FRONT GUNNERS FLOOR AMPH.			OPPHAND	
				SIZE C	2884166

REPLACES		SHT 2 4-29-39 APPROVED DATE	
REPLACED BY		DWG. NO.	ASSY. WT.
± LIMIT OF TOLERANCE UNLESS OTHERWISE SPECIFIED	1/32	SCALE	6" = 1'-0"

NOTE:- DIMENSIONS OF WINDOW ARE NOT CRITICAL. CUT OUT APPROX. AS SHOWN. FORM COVER PARTS TO FIT.

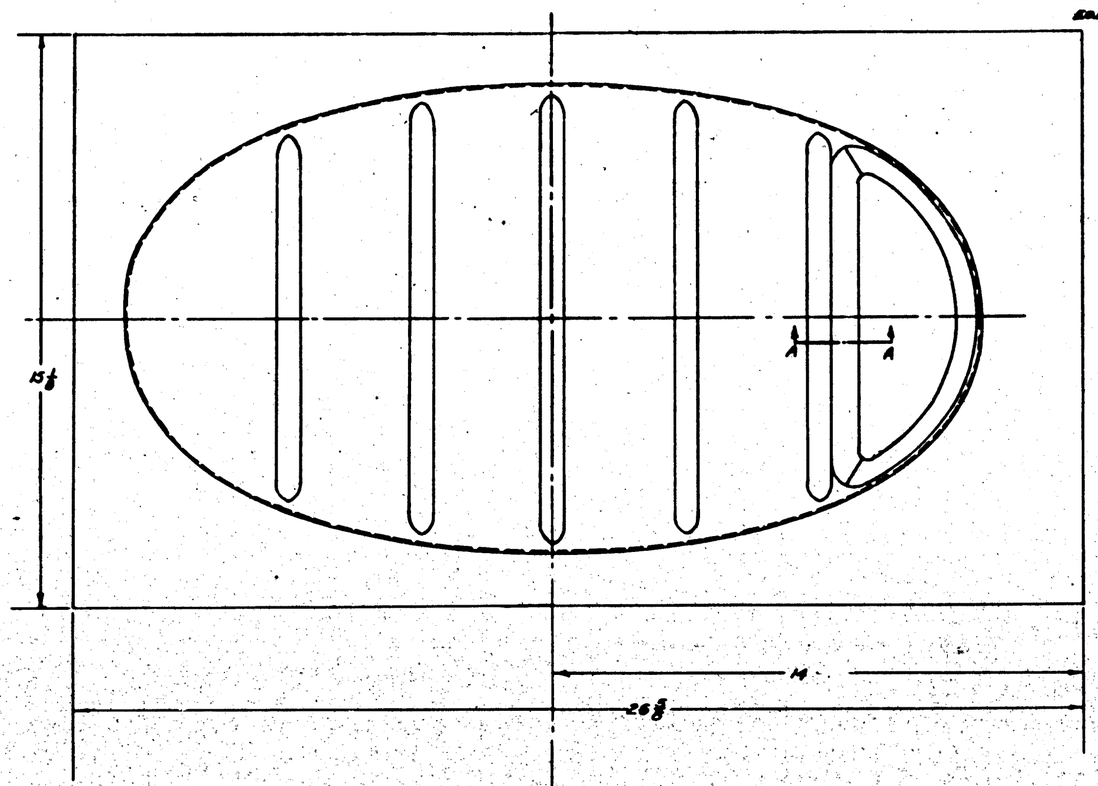

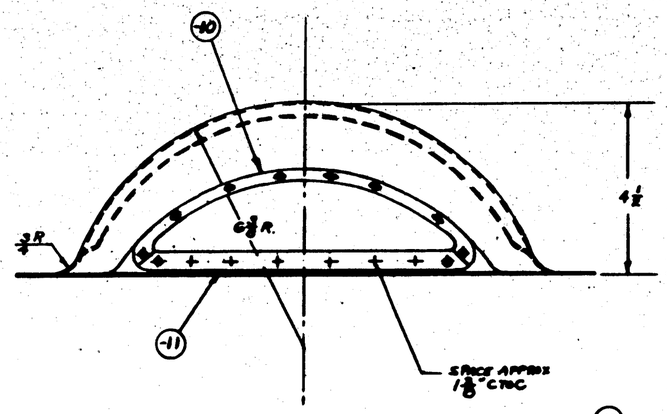

VIEW B-B

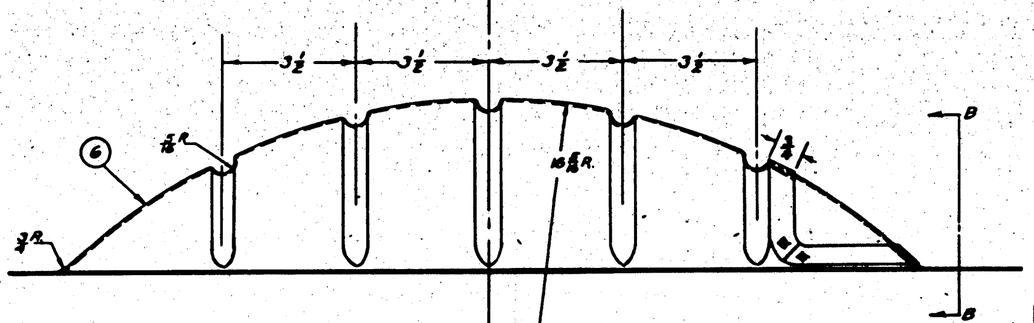

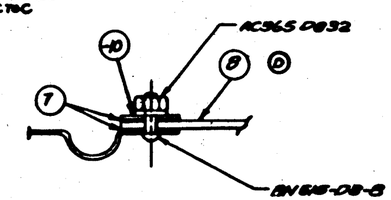

SCALE 12"=1'-0"
SECTION A-A

MATERIAL NOTE:
1.- MAT'L FOR -8 MAY BE:-
(A). PLEXIGLAS, SPEC. P-41, GR. A, CB.
(B). CELLULOSE ACETATE, SPEC. P-41, GR. B.

PART NO.	STOCK	MATERIAL	SPEC.	-0	-2	-3	-4	-5
PIECES LIST FOR ASSY.								

DRAFT SR-58	2-P-60		
HEAT TREAT	FINISH		

NAME COVER - HULL - NOSE WHEEL WELL ST. I. 166 (APP.) - "2

SCALE 6"=1'-0"

28B474

E.O.A8369
PBY-5A
OA-10
28-5AMC

E.O.A777 K

A13856 K

LET	ALTERATION	DATE	BY
A	CHANGE DIM. 3 TO 3 1/32 AND ADD REF. LINE - A AS SHOWN		
B	ADD 28B1600A5 ASSY. AS SHOWN ADD 28B1600 ASSY. AS SHOWN ADD PBY-5A, OA-10 & 28-5AMC		
	REVISED B-1 VIEW OF BLKHD. 3	4/15/42	
	REVISED B-2 VIEW OF BELTFRAME 5.25		
	REVISED B-3 VIEW OF BELTFRAME 5.75		
	VIEW OF ALLOWANCE ADDED		
	INBD (-6) (4 REQD. WAS 1)		
C	DIM. 3 WAS 2 31/32	4/15/42	

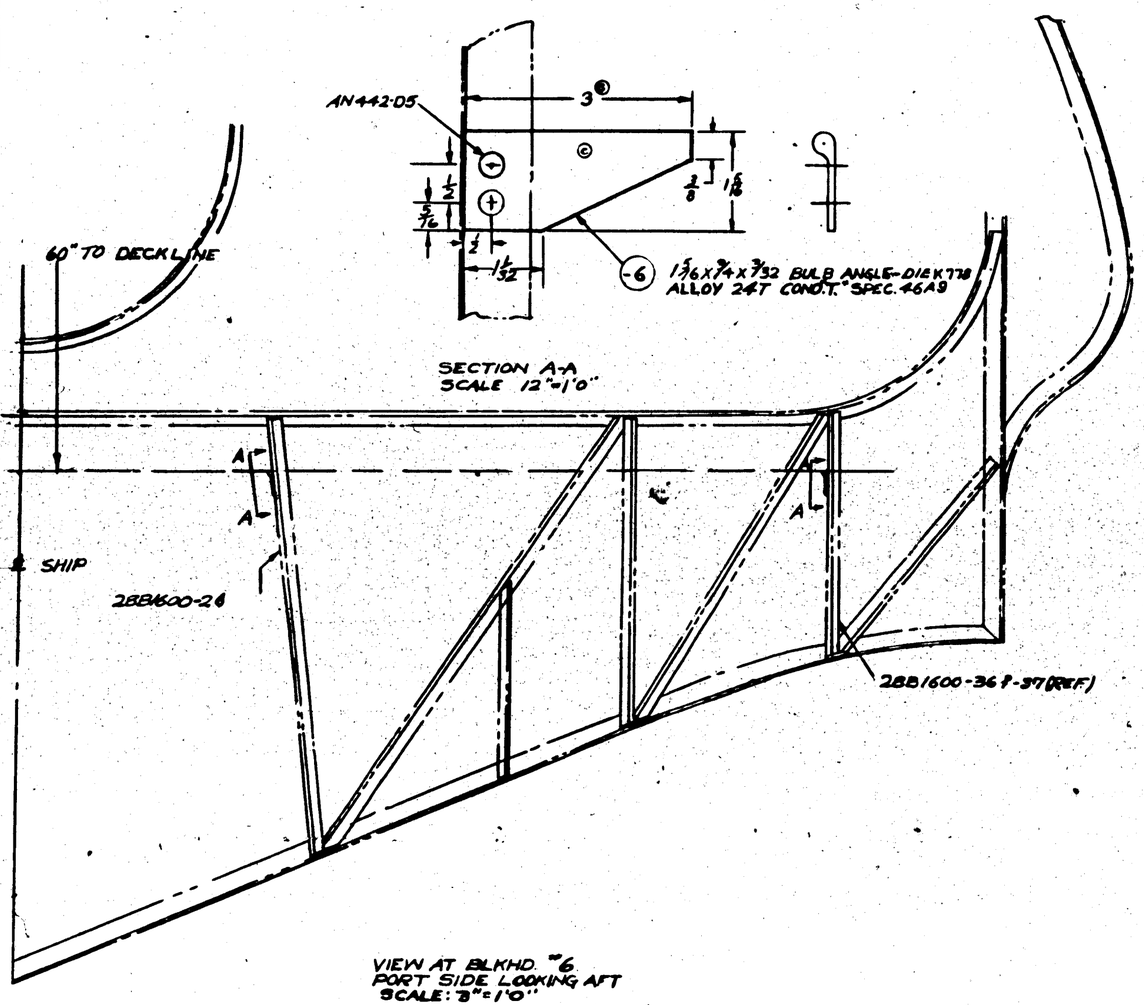

VIEW AT BLKHD. "6
PORT SIDE LOOKING AFT
SCALE: 3"=1'0"

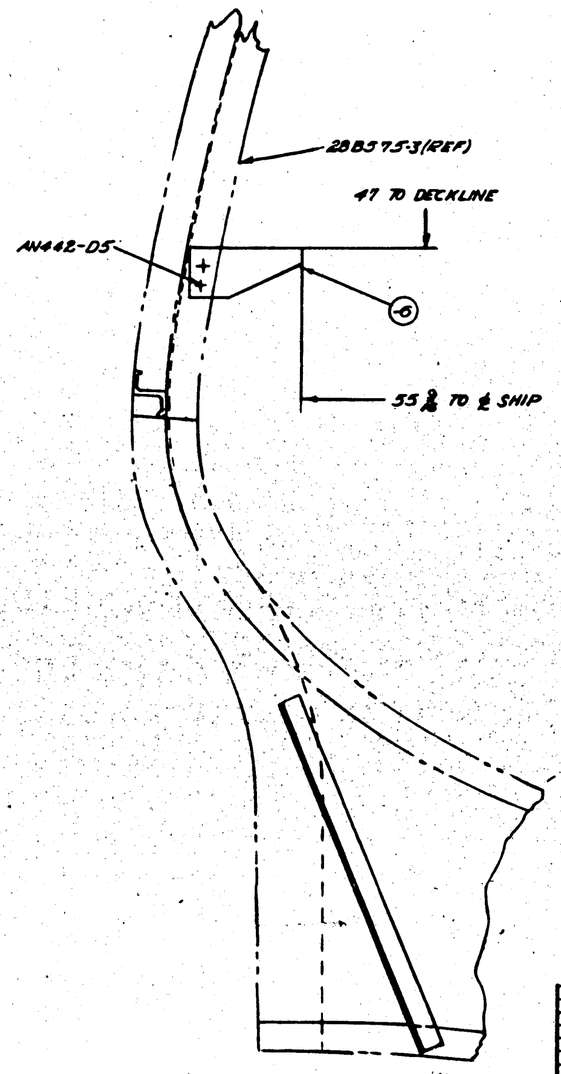

VIEW AT BELTFRAME 5.75
PORT SIDE LOOKING FWD.
6'-1"
Ⓔ

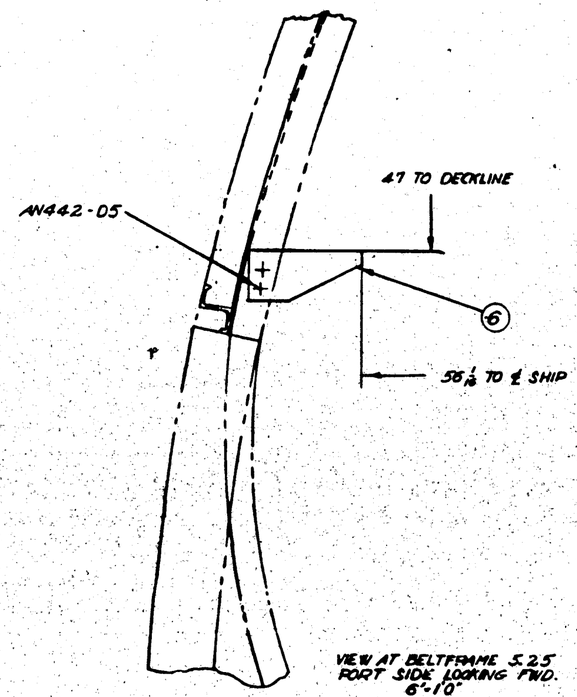

VIEW AT BELTFRAME 5.25
PORT SIDE LOOKING FWD.
6'-10"
Ⓓ

FINISH:
ANODIZE
P27 PRIMER
2 BLACK LACQUER

28-5AMC	28B3508
OA-10	28B3509
PBY-5A	28B3510
ASSY-5A	28B1600

LINE ITEM	MODEL	PART NUMBER	QTY
REQUIREMENTS PER ASSY.			
REPLACED			
REPLACED BY			

PART NO.	STOCK	MATERIAL	SPEC.	LH	RH	LH	RH	LH	RH	LH	RH
PARTS LIST PER ASSY.				-0		-2		-3		-4	
NOTED	NOTED	NOTED									

HEAT TREAT NOTED	FINISH ZP2BL REPAIR PARTS	DRAFT 4/14/42	CHECK	ENGR.	ENGR. MEP	APPD. JKP 4/14/42

CONSOLIDATED AIRCRAFT CORP. SAN DIEGO, CALIF.

BLOCKS-INSTALL-HULL LEVELING

SIZE G

2884247

LET	ALTERATION	DATE	BY

LET	ALTERATION	DATE	BY
A	[redacted]		
B	[redacted]		
C	[redacted]		
D	[redacted]		
E	[redacted]		

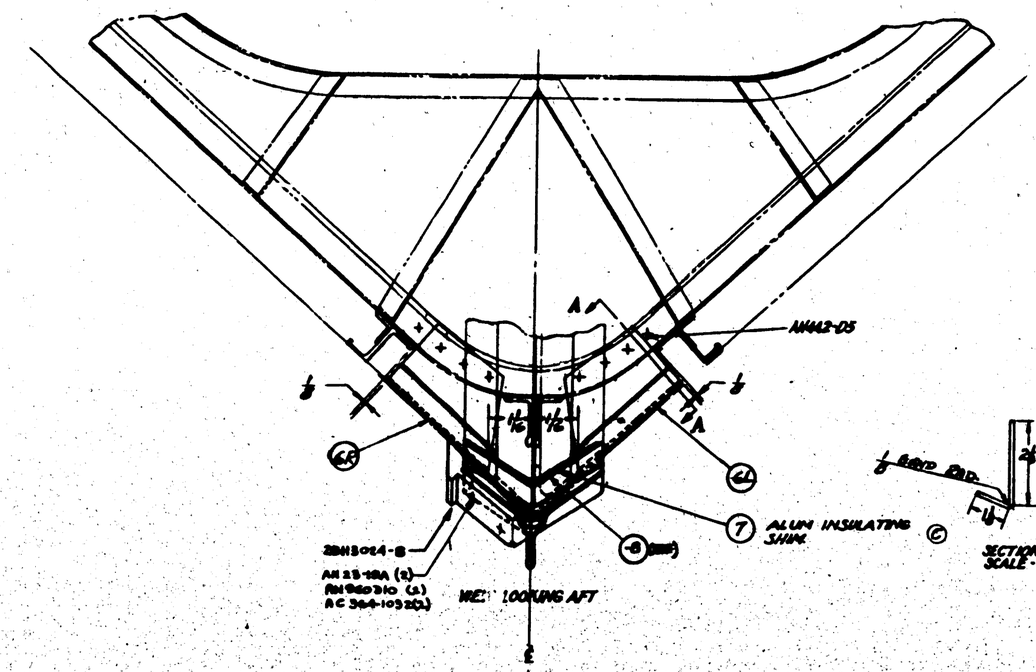

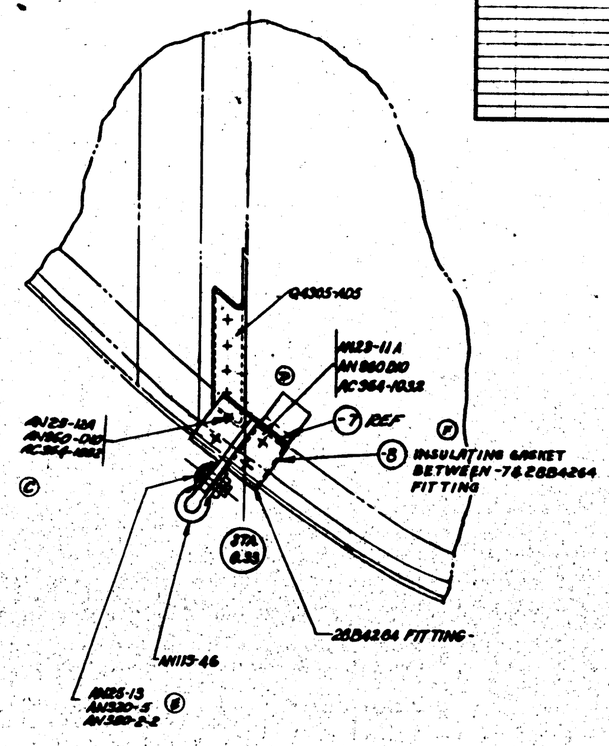

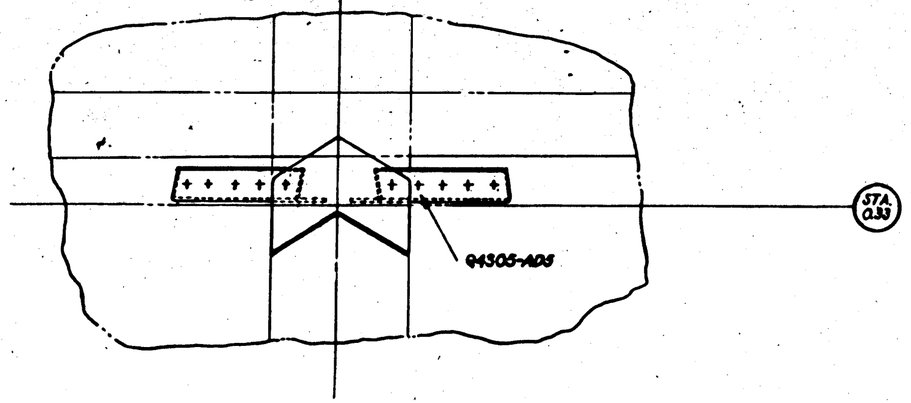

FINISH.
-6 A.R. - 7 - 2 - P-AP
P-2AP UNDER FTG
1 COAT BLACK BITUMASTIC
AFTER ASSEMBLY

FINISH CODE

Z	[redacted]
P	[redacted]
AP	[redacted]
C	[redacted]

PART No.	STOCK	MATERIAL	SPEC.	LIST ON REQ.	LIST ON REQ.	LIST ON REQ.	LIST ON REQ.	LIST ON REQ.
POINTS LIST PER ASSY.				-0	-2	-3	-4	-5
-7	.064	[redacted]	ALUM	4130 - T6				
-8	.064	[redacted]	ALUMINUM	4130 - T				
-9	.064	[redacted]	"	" - T				

REQUIREMENTS PER AIRPLANE

REPLACES [redacted] DF 9-27-37

A.C.
NAVY [redacted] HEAT TREAT
FINISH [redacted]

NAME INST. - HULL - TOWBAR SHEARING FITTING

CONSOLIDATED AIRCRAFT CORP. San Diego, Calif.

SIZE G

28B4266

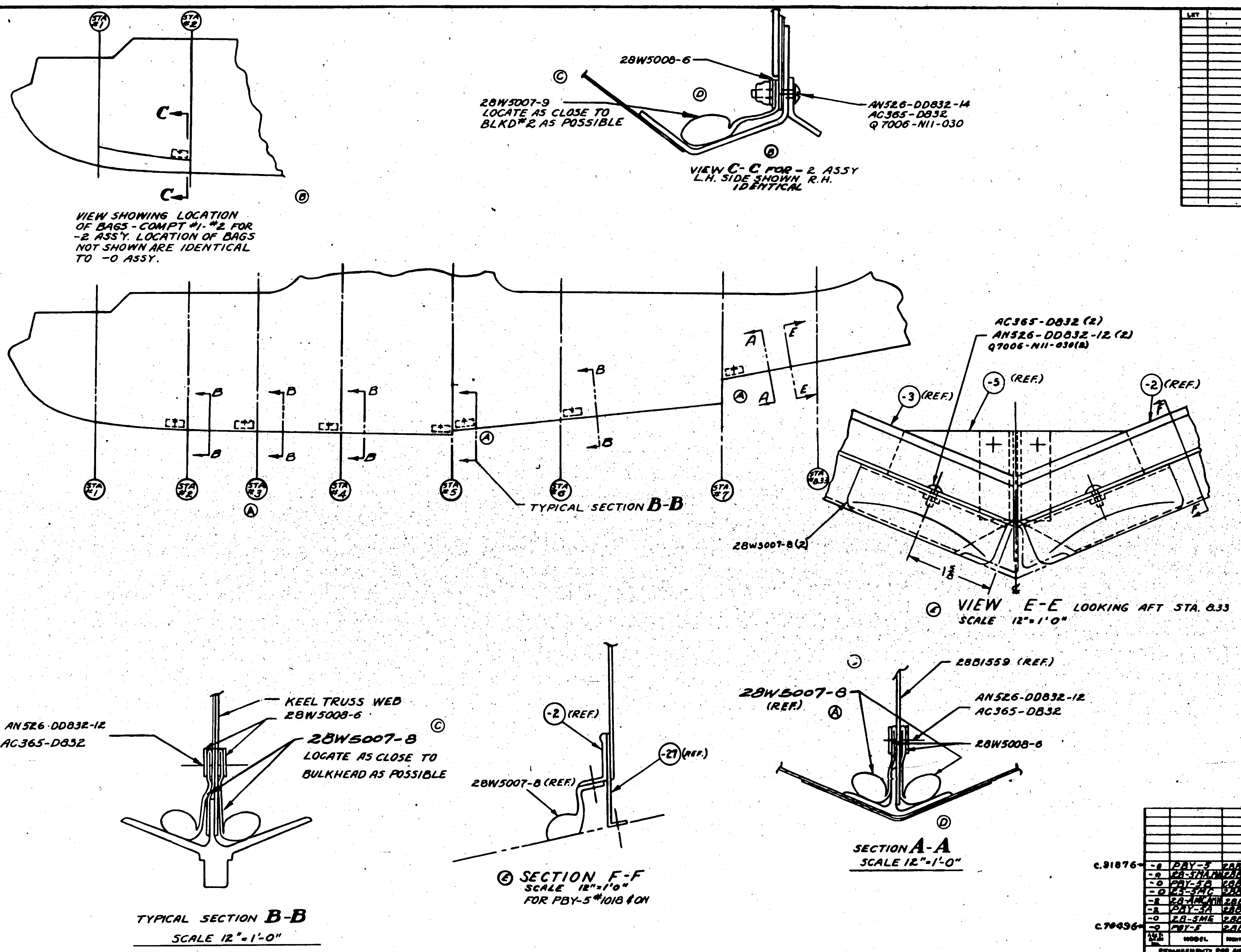

LET	ALTERATION	DATE	BY
A	ADDED BAGS AT FRONT SIDE OF STA #3 AND AFT SIDE OF STA #5. REMOVED 28W5007-6 FROM DWG & B/M REPLACED WITH 28W5007-6. CHANGED REQ'TS IN B/M FOR 28W5007-6 FROM 8 TO 14; FOR AC-365-D832 FROM 5 TO 7; FOR AN515-D8-10 FROM 5 TO 7; REMOVED 28-5MF FROM REQ'TS/AIRPLANE	11-25-40	
B	ADDED -2 ASSY NO. & B/M FOR PBY-5A, 28-5ANC-OAU-1 ADDED VIEW C-C	11-30-40	
C	REPLACED 28W5007-6 WITH 28W5007-8 & -9. REPLACED AN515-D8-12 WITH AN526-DD832-12 & -14	1-14-41	POWERS
D	REDESIGNED BAGS		
E	ADDED VIEW E-E & SECT. F-F WT. CHG. +.12	4-10-42	

REQUIREMENTS FOR AIRPLANE

	ASSY DASH NO.	MODEL	NEXT ASSY	REQ.
c.91876	-0	PBY-5	28B6000	1
	-0	28-5MA,MH	28B1000	1EA
	-0	PBY-5B	28B6000	1
	-0	28-5MC	28B1000	1
	-2	28-ANC,AMH	28B5500	1EA
	-2	PBY-5A	28B5500	1
	-0	28-5ME	28B1000	1
c.70496	-0	PBY-5	28B1000	1

PARTS LIST PER ASSY

PART No	STOCK	MATERIAL	SPEC.	-0 REQ.	-2 REQ.	-3	-4	-5
Q7006-N11-030				2	2			
AN526-DD832-14					2			
AN526-DD832-12				9	6			
AC365-D832				9	8			
28W5008-6				14	14			
28W5007-9					2			
28W5007-8					12			
-0								

SCALE 1/16 NOTED

AC —— NAVY ——

DRAFT 5-15-40 LOE; CHECK GREEN 5-16-40; 5-16-40

INSTALL-HULL CORROSION INHIBITOR

CONSOLIDATED AIRCRAFT CORP. SAN DIEGO CAL

SIZE G — 28B5018

R 28B5018

LET	ALTERATION	DATE	BY
A	ADDED DASH NO'S -44-10 FOR TABS ON PARTS OF -6 & -8 IN DETAIL B-B		
	DIM 1 1/2 WAS 1 5/8 WAS 1 3/4		
	75° WAS 60° REMOVED DIM		
	1 1/2 & 1 CHGD. TO 1 1/8 & 1 3/8	3-10-42	
	1/2 & 1 WT. CHG. NEG.		
B	CHG'D DIMS.: 3/8 WAS 1/4, 3 1/8 WAS 3 1/4, & 1 1/4 R. WAS 1R NO WT CHG	3-14-42	
C	-8 WAS 28B2352-6 & 10 REQ'T. BUT 1/8 DRILL WAS 3/8 DRILL.		
	ADDED DETAIL "C" NEG. WT. CHG.	3-16-42	
D	REMOVED 28B2338-7F-8 ADDED -13 & -14 DETAIL -13 (NOT C" WELD "93" REMOVED		
	DIM. V8 (1) - NEG. WT. CHG.	3-24-42	

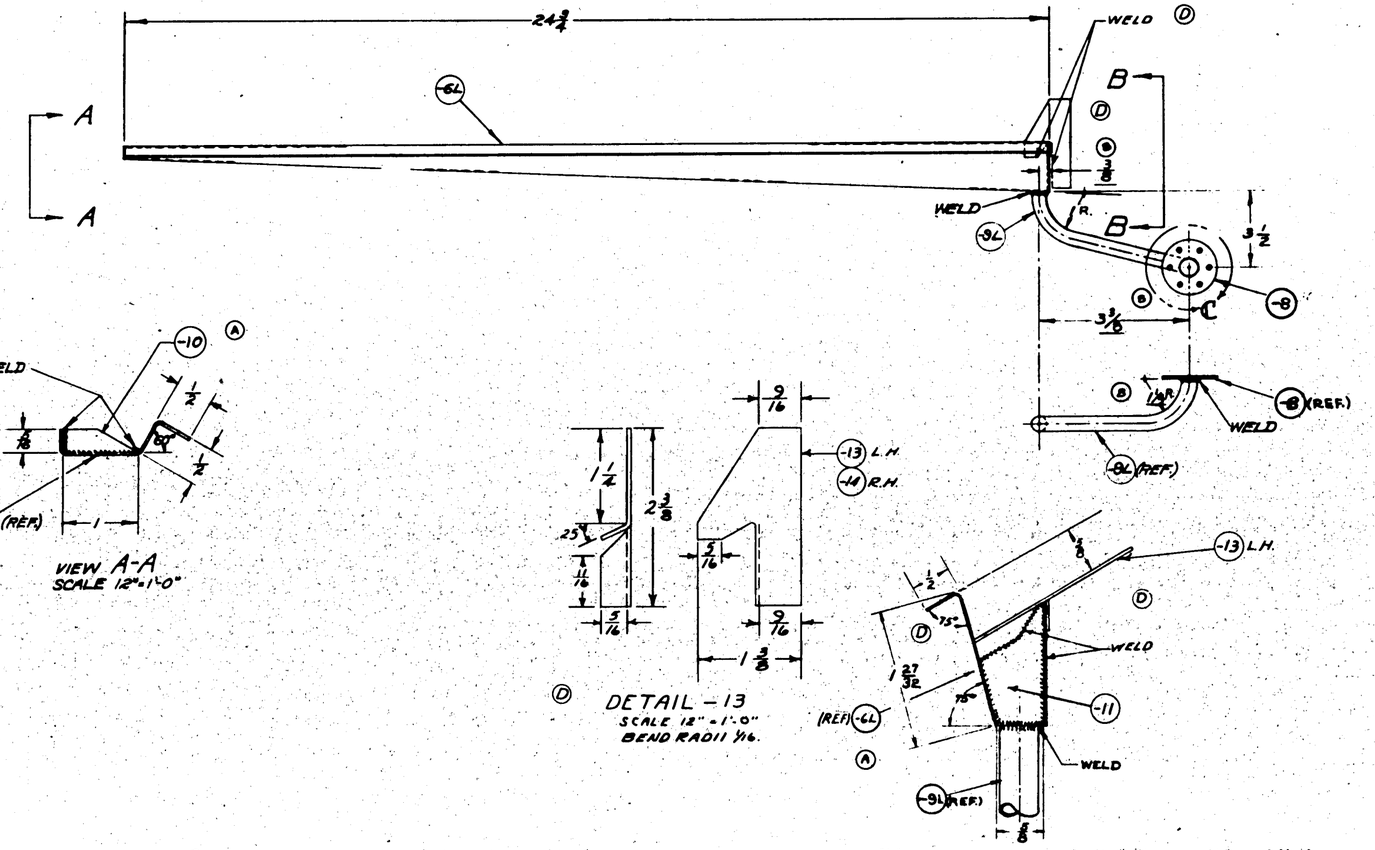

FINISH CODE	
Z	ANODIC TREATMENT
P	P-37 PRIMER
AP	ALUMINIZED PRIMER
C	CADMIUM PLATE

NOTE: THIS D'WG WAS RUSH RELEASED 1-7-42

NOTE:
ALL BEND RADII 3/8 UNLESS OTHERWISE SPECIFIED.

PART NO	STOCK	MATERIAL	SPEC	LH REQ	RH REQ	LH REQ	RH REQ	LH REQ	RH REQ	LH REQ	RH REQ
PARTS LIST PER ASSY.				-0	-2	-3	-4	-5			
-R	CRY-C	28B2352		1							
-L	CRY-C	28B2350			1						
-R	CRY-6B	28B2350		1							
-L	CRY-6B	28B2350			1						
-R	28-SAHV	28B2350		1							
-L	28-SAHV	28B2350			1						
-R	CRY-5A	28B2350		1							
-L	CRY-5A	28B2350			1						
-MR	.040 x 1 1/8 x 2 1/2	AL. AL. SHT.	47A11 TEMP A	1							
-ML	.040 x 1 1/8 x 2 1/2	AL. AL. SHT.	47A11 TEMP A		1						
-11	.040 x 1 1/8 x 1 1/8	AL. AL. SHT.	47A11 TEMP A	1	1						
-10	.040 x 1 1/8 x 1 1/8	AL. AL. SHT.	47A11 TEMP A	1	1						
-8	1/8 x .035 x 7	AL. AL. TUBE	14ST RTE TEMP A	1	1						
-6	1/8 x .035 x 7	AL. AL. TUBE	14ST RTE TEMP A	1	1						
-6L	.040 x 4 x 26 1/2	AL. ALLOY	47A11 TEMP A	-	1						
-6R	.040 x 4 x 26 1/2	AL. ALLOY	47A11 TEMP A	1	-						

MATERIAL											
NEXT ASSY.											
MODEL											
ASSY BASH NO.											
REQUIREMENTS PER AIRPLANE											
REPLACES	28B2952	4									
REPLACED BY		ASY. QTY.									
LOFT OR TEMPLATE DRAWING		SCALE 1"=1'-0" UNLESS NOTED									
STAMP PART NUMBER WHERE SHOWN											

A C											
NAVY NONE	Z-P-AP										
HEAT TREAT	FINISH	DRAW	CHECK	STRUCT	MAT.	APPROV	ENG.				
NAME GUTTER-HULL-PILOT'S HATCH DRAIN-OUTER											
CONSOLIDATED AIRCRAFT CORP. SAN DIEGO, CALIF.											

OPP. HAND 28B2031-R

SIZE G

28B2031

INCORP. BUR. AERO. CHANGE #41 - MODEL PBY-5A

LET	SUPPLIES & EQUIPMENT CLASSIFICATION — ALTERATIONS	DATE	BY
G	-2 & -3 MAT'L "SYN. RUB. TUBE TYPE" BK. GR.A" MFR. "MULTI NOR. TUBING" CHG "G" & "I" TO "200" UR. TUBING & MFR "32" RESPECTIVELY (NEG. WT. CHG.)	8-31-42	DOWNS
H	IN "MFR" AMPH. PLY. ADDED -2 FOR PBY-5A "A" 28B5186 USED. ADDED -2 FOR PBY-5A "A" 28B5186 USED. SEED STRIP 41 RUB & LUGS). NO WT CHG	9-2-42	DOWNS

LET	SUPPLIES & EQUIPMENT CLASSIFICATION — ALTERATION	DATE	BY
A	ADDED Q7007-NI3-016. RE		
	PLACED Q4305-D4 WITH		
	Q4305-D6 & PARKER-KALON		
	WING NUT WITH 32B1252 REMOVED		
	REF. FOR PBY-3B, PBY-5 & 5A-5A/ME. NO WEIGHT CHANGE	1-17-42	LE (TRW)
B	REMOVED 28B5633-6-7-8 & -9	2-10-42	WEBB (TRW)
	ALSO AN526DD1032-12 AND		
	AC364 DIO32 FROM DWG & BM.		
	REMOVED 28B5635 & AN526DD1032-24, & 1 3/16, 1/8 R, & 3 3/8 R.		
C	CHANGED AN442D3 TO Q4305D3		
	AN526DD1032-24 TO AN526DD1032-24		
	ADDED -1-8-9, NS15-412, AN340-4,		
	AN960-4 & Q7102-AL 4. CREATED		
	-2 ASSY AND REVISED REF. PER		
	AIRPLANE TO SUIT, NO WT. CHANGE	8-18-42	DOWNS
D	AN526DD1032-32(A) WAS -24 (NEG. WT. CHG.)	8-15-42	DOWNS
E	AN515-4-12(6) WAS -12 "IN ASS'Y (-6 SUB ASS'Y) (NEG. WT. CHG.)	6-15-42	DOWNS
F	ADDED 53", 27", 49°, 62° LOCATING DIMS. 1 3/16 DIM. NO WT. CHG.	8-6-42	BMH

RUSH RELEASED 1-13-42

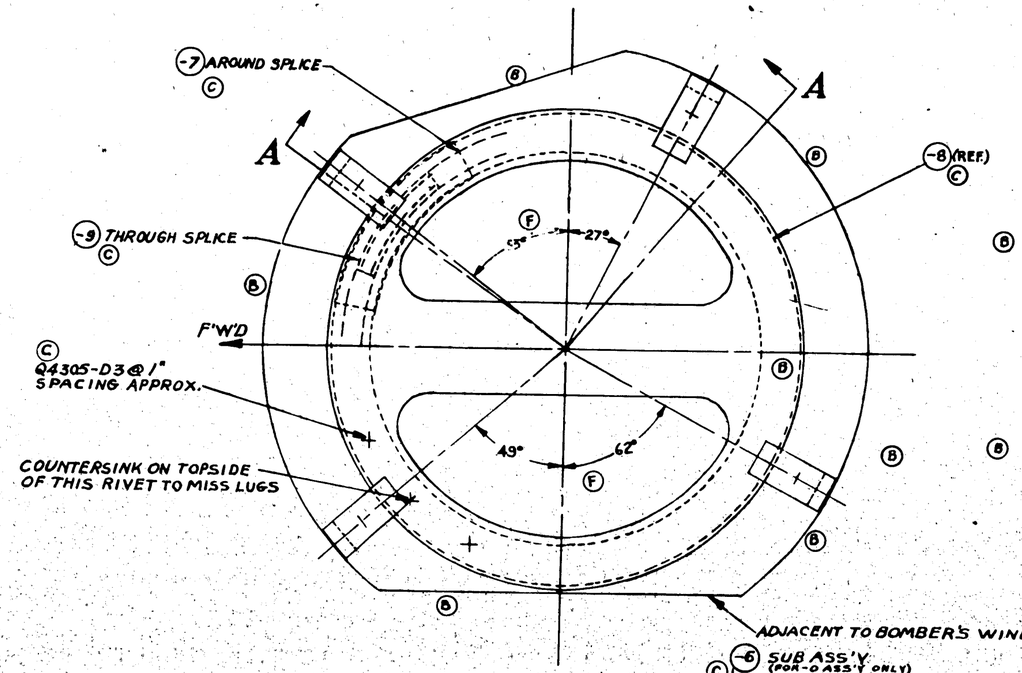

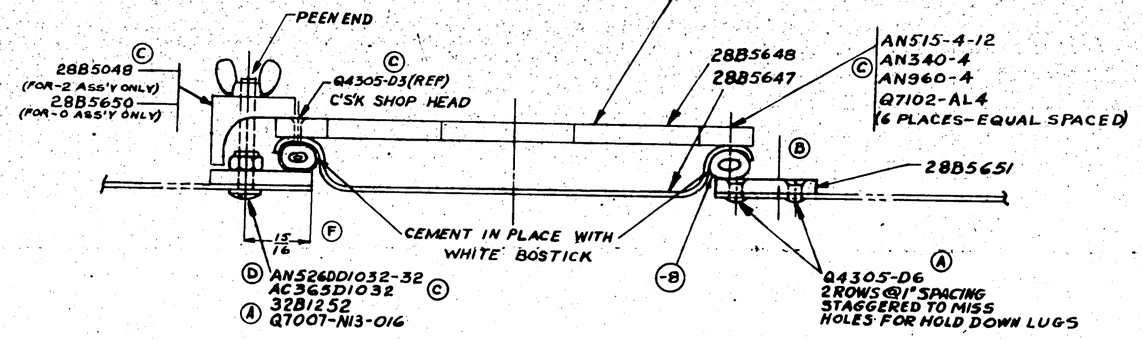

SECTION A-A

NOTE: (C)
MAKE -7 FROM RU3X 1/2 X 1 RUBBER
(G) TANK LINING #350 UNVULCANIZED.

MCR 272 A-1 (AN-) CNO thru 464 "I" TO MCR 272 A-1

	PART NO	STOCK	MATERIAL	SPEC.	LH QH	LH RH	LH QH	LH RH	LH QH	LH RH
		PARTS LIST FOR ASSY.			REQ.	REQ.	REQ.	REQ.	REQ.	REQ.
-2	PBY-5A	28B5810								
-2	PBY-5A	28B5806								
-2	GR-5A/MN	28B5186								
-2	PBY-5B	28B5186								
-2	PBY-5	28B5186								
-0	PBY5A	28B5186								
ASS'Y NO.	MODEL				-0	-2	-3	-4	-5	
50 SHIPSETS PER AIRPLANE										
50 PLACES		3.16 EST. WT.								
REPLACED BY		ACT. WT.								
QUALITY OF REPRODUCTION MUST BE SATISFACTORY	SCALE 12"=1'0"									
1/32										
28B5033-4	SUB ASSY.									
28B5033-3	1/16 D X 1/16 D X 2	SYN. RUB. TUBE	TYPE III, CLASS A		1					
-8	1/16 D X 1/2 D X 21	SYN. RUB. TUBE	TYPE III, CLASS A		1					
-7	RU3 X 3/8	MOYED			1					
-6	SUB ASSY									
Q4305-D6										
Q7007-NI3-016					4	4				
AN526DD1032-32					4	4				
AC365D1032					4	4				
32B1252					4	4				
28B5651					1	1				
28B5650					4	—				
28B5048					—	4				
28B5044					—	4				

C-#91876
CONT. #77713 (#7271 & ON)
CONT. #88476 ONLY

A.C.		LEATHER			
NAVY NONE	NONE	1-9-42			
HEAT TREAT	FINISH	DRAFT	ENGR	INSPECT	CHK

NAME ASS'Y - HULL - BOMBER'S WINDOW HANDLE

CONSOLIDATED AIRCRAFT CORP. SAN DIEGO, CALIF.

CPD NONE

SIZE G — 28B5033

R

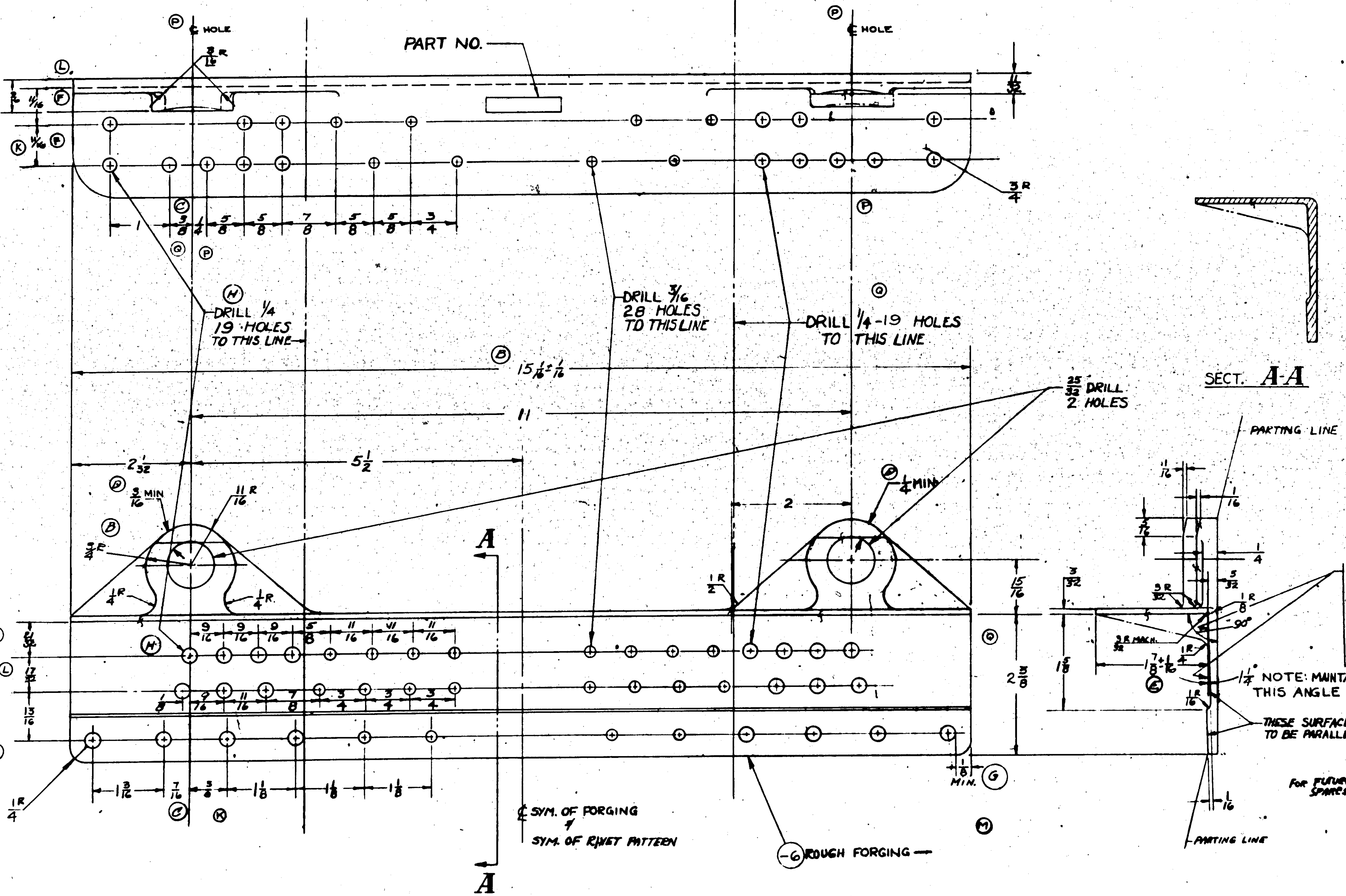

FORG. NOT APP.

LET	ALTERATION	DATE	BY
L	DIM 9/16 WAS 5/8; 21/32 WAS 19/32 (NO WT. CHG)	6-2-42	
H	SPEC. AN-QQ-S-684 WAS "46323 FORGED TO 46520." REMOVED FROM FACE "HT. 150,000 #/□" AS REQD." (NO WT. CHG)	7-11-42	
N	ADDED HT. 150,000 #/□" AS REQD. AND NOTE "MAT. --------" (NO WT. CHG)	9-4-42	
P	REMOVED 1" & 1¼" DIM'S & CHANGED ℄ OF HOLE 2 PLACES. NO WT. CHG.	9-17-43	
Q	ON FACE OF DWG. ADDED ¼ HOLE (TOP VIEW) & REMOVED ¼ HOLE (SIDE VIEW); "DRILL ¼ - 18 HOLES TO THIS LINE" WAS "DRILL ¼ - 20 HOLES TO THIS LINE" NO WT. CHG.	10-4-43	

LET	ALTERATION	DATE	BY
A	CHGD. SPEC. FROM SAE 4130 TO "46323 FORGED TO 46520"		
B	DIM 15 1/16 ± 1/16 WAS 15 & ADDED 25/32 DIA		
C	REMOVED DIMS LOCATING 3/16 HOLES FROM EDGE & LOCATED THEM FROM CENTER LINE OF LUG		
D	ADDED 3/16 MIN. & 1/4 MIN DIM. E.O. 20650	7-9-40	
E	ADDED TOLERANCE OF ± 1/16 TO 1 7/8 DIM. & CHANGED 1 1/2° MAINTAIN TO 1 1/4° NOTE: MAINTAIN THIS ANGLE.		
F	REMOVED 3/8 DIM; ADDED 9/16 DIM. REMOVED 1/2 DIM; ADDED 5/32 DIM.		
G	1/8 MIN. DIMENSION ADDED	4-3-41	
H	REMOVED 1/4 HOLE. 19 HOLES WERE 20 HOLES - PBY-5, 28-5ME	5-20-41	
J	ADDED NOTE TO FACE OF DWG. "THIS SURFACE NEED NOT BE" ETC.	9-11-41	
K	DIMS CHGD. 11/16 WAS 13/16, 3/8 WAS 3/4. NO WT. CHG.	12-25-41	P. SMITH

(N) NOTE: MAT = X4130 C.M. AN-QQ-S-684
ALTERNATE SAE 4185

NOTE: (J)
THIS SURFACE NEED NOT BE FLAT WITHIN ± 1/32 AFTER MACHINING, HAND GRINDER MAY BE USED TO SMOOTH UP SMALL VARIATIONS BETWEEN MACHINED & UN-MACHINED SURFACES.

TOOL NOTE:
LOCATION OF ALL HOLES ARE IDENTICAL TO 28B047-REF.

FINISH CODE

Z	ANODIC TREATMENT
P	P-27 PRIMER
AP	ALUMINIZED PRIMER
C	CADMIUM PLATE

ASSY DASH NO.	MODEL	NEXT ASSY	REQ.
R/L	PBY-5B	28B1028	1/1
R/L	PBY-5A	28B1028	1/1
R/L	28-5AMN	28B1028	1/1
R/L	28-5AMC	28B1028	1/1
R/L	28-5MN	28B1028	1/1
R/L	28-5MC		1/1
R/L	28-5MA		1/1
R/L	28-5ME		
R (For future spares)	PBY-1-2-3-4	28B1028	1
L (For future spares)	PBY-1-2-3-4	28B1028	1
R	PBY-5	28B1028	1
L	PBY-5	28B1028	1

REQUIREMENTS PER AIRPLANE

REPLACES | 2.4# CALC. WT.
REPLACED BY | ACT. WT.

LIMIT OF DIMENSIONS UNLESS OTHERWISE SPECIFIED: ± 1/64 FRAC. / ± .010 MACH. — SCALE 12" = 1'-0"

STAMP PART NUMBER WHERE SHOWN

PART No.	STOCK	MATERIAL	SPEC.	LH / RH REQ.	LH / RH REQ.	LH / RH REQ.	LH / RH REQ.	LH / RH REQ.
-6	FORGING	NOTED						
				-0	-2	-3	-4	-5

PARTS LIST PER ASSY.

A C
NAVY 150,000 #/□" — HEAT TREAT
C-P-2AP — FINISH
12/5/39 — DRAFT / CHECK / STRESS / MAT. / APPROV. / ENG.

OPP. HAND 28B5047R

NAME FITTING-HULL-LOWER BEACHING-GEAR

CONSOLIDATED AIRCRAFT CORP. SAN DIEGO, CALIF.

DWG. G 28B5047

28B5047

PART NO.	STA.
2885056-19	6.10 ℄ 6.30
2885056-20	6.50 ℄ 6.35
2885056-21	6.65 ℄ 6.85

PART NO.	STA.	CL/W	LOCATION *
2885056-6L	6.10	255	0 3/16 AFT. OF STA. #6.0
-7L	6.30	243	10 3/16 AFT. OF STA. #6.2
-8L	6.50	256	0 1/8 AFT. OF STA. #6.4
-9L	6.55	259	15 3/16 AFT. OF STA. #6.4
-10L	6.65	265	6 1/4 AFT. OF STA. #6.6
-11L	6.70	268	10 3/16 AFT. OF STA. #6.6
-12L	6.75	270	15 9/32 AFT. OF STA. #6.6
-13L	6.85	276	4 15/32 AFT. OF STA. #6.8
-14L	6.90	279	8 13/16 AFT. OF STA. #6.8
2885056-15L	6.95	282	13 1/32 AFT. OF STA. #6.8

LET	ALTERATION	DATE	BY

LET	ALTERATION	DATE	BY
F	TRACER ADDED DETAIL -16. -19,-20,&-21 NO WTCHG. 7-31-42		

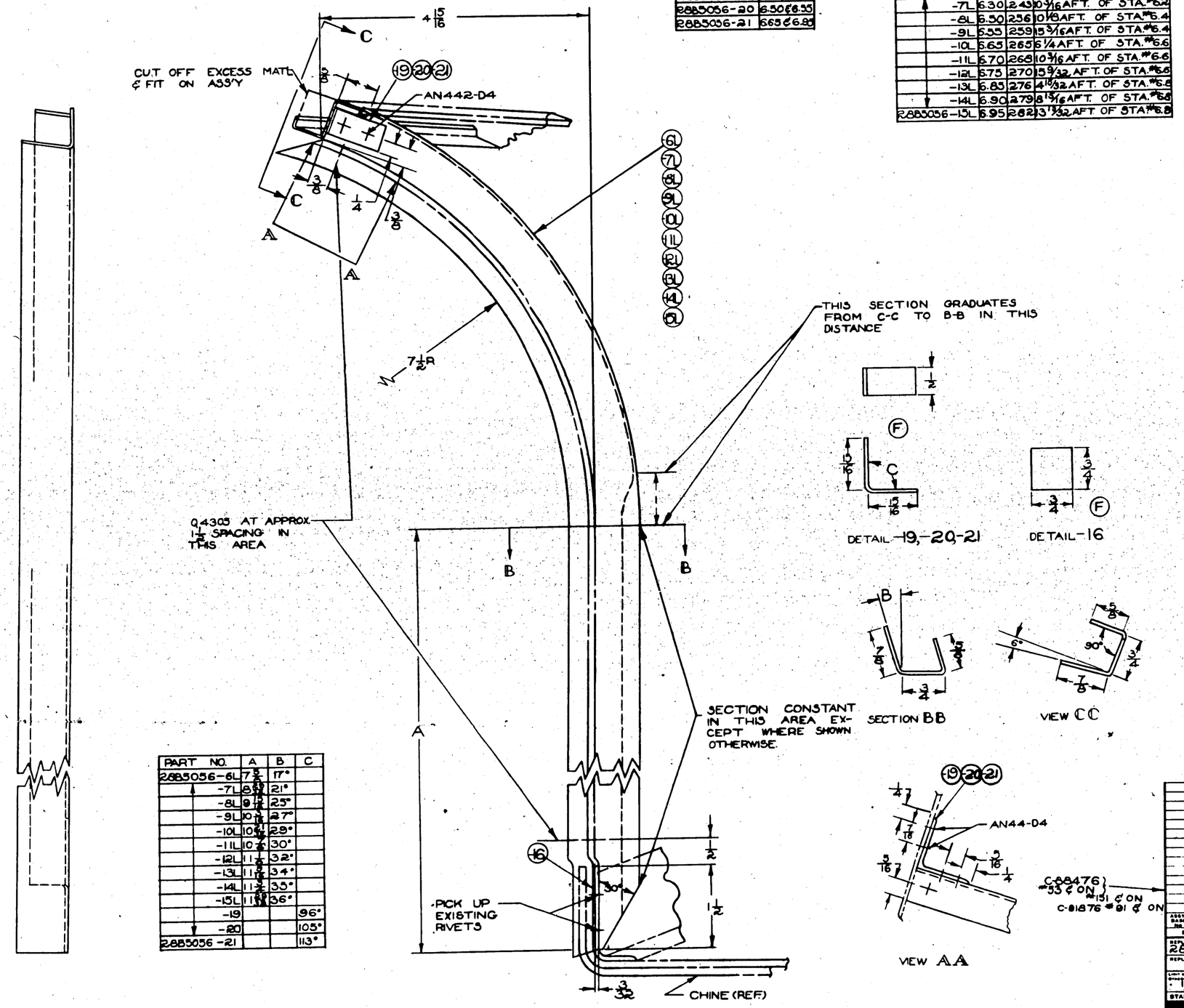

PART NO.	A	B	C
2885056-6L	7 5/8	17°	
-7L	8 5/8	21°	
-8L	9 1/2	25°	
-9L	10 1/4	27°	
-10L	10 3/4	29°	
-11L	10 7/8	30°	
-12L	11 1/4	32°	
-13L	11 5/8	34°	
-14L	11 7/8	35°	
-15L	11 15/16	36°	
-19			96°
-20			105°
2885056-21			113°

PART No	STOCK	MATERIAL	SPEC	LH REQ	RH REQ	LH REQ	RH REQ	LH REQ	RH REQ	LH REQ	RH REQ
	PARTS LIST PER ASSY.			-0	-2	-3	-4	-5			
AN442-D4											
Q4305-D5											
2885056-21	.064 x 1/2 x 2 1/4	DURAL SHEET	47A10-T	18							
-20	.064 x 1/2 x 2 1/4			4							
-19	.064 x 1/2 x 2 1/4			4							
-16	.072 x 3/4 x 3/4			20							
-15	.064 x 6 1/2 x 20				1						
-14	.064 x 6 1/2 x 19 3/4					1					
-14	.064 x 6 1/2 x 19 3/4				1						
-13	.064 x 6 1/2 x 19 5/8					1					
-13	.064 x 6 1/2 x 19 5/8				1						
-12	.064 x 6 1/2 x 19 1/4					1					
-12	.064 x 6 1/2 x 19 1/4				1						
-11	.064 x 6 1/2 x 19					1					
-11	.064 x 6 1/2 x 19				1						
-10	.064 x 6 1/2 x 18 3/4					1					
-10	.064 x 6 1/2 x 18 3/4				1						
-9	.064 x 6 1/2 x 18 1/4					1					
-9	.064 x 6 1/2 x 18 1/4				1						
-8	.064 x 6 1/2 x 18					1					
-8	.064 x 6 1/2 x 18				1						
-7	.064 x 6 1/2 x 17					1					
-7	.064 x 6 1/2 x 17				1						
-6	.064 x 6 1/2 x 16 1/8					1					
2885056-9	.064 x 6 1/2 x 16 1/8	DURAL SHEET	47A10-T		1						

ASSY SUBS NO.	MODEL	NEXT ASSY	QTY
28-SAMN	2885000		
PBY-5A	2885000		
PBY-5B	2885000		
PBY-5	2885000		

REQUIREMENTS PER AIRPLANE

REPLACES 2885056 3-1-42 NOTED

REPLACED BY

LINEAR DIMENSIONS UNLESS OTHERWISE SPECIFIED: 1/32

SCALE 12"=1'0"

STAMP PART NUMBER WHERE SHOWN

A C		TRUSSELL	7-1-42	DRAFT	CHECK	STRUCT
NAVY SR-53	ZP-AP					MFG.
HEAT TREAT	FINISH					

NAME INSTALL-HULL-SIDE STIFFENERS-STA 6.05 TO STA 6.95

OPP HAND

CONSOLIDATED AIRCRAFT CORP. SAN DIEGO, CALIF.

DWG G

SIZE

2885056

R

E.O. A74787

LET	ALTERATION	DATE	BY	LET	ALTERATION	DATE	BY
A	ADDED SECT. A-A FOR PBY-5 #198 TO 260 ONLY AN526-DD832-7 WAS AN510-DB-10, AC366-DF836 WAS AC367-DF836 & DRILL 17/32 WAS DRILL 9/32 C'SK PUNCH .82" x 3/4 DIA. 8 HOLES IN -7. C'SK .82" x 17/32 DIA. 8 HOLES IN -6. FOR PBY-5 #198 TO 260. WT CHG. NEG.	11-17-42	[illegible]				
B	AN526-DD832-7 WAS AN526-DB-7, AC366-DF832 WAS AC366-DF836 & .1695 DIA. HOLE 8 PLACES. WAS DRILL 9/32 FOR PBY-5 #198 TO 260. WT CHG. NEG.	11-17-42	[illegible]				
C	BROUGHT REQ/AIRPL. UP TO DATE & CHGD. LIMITS ON FACE & B/M TO AGREE. NO WT. CHG.	5-15-43	[illegible]				

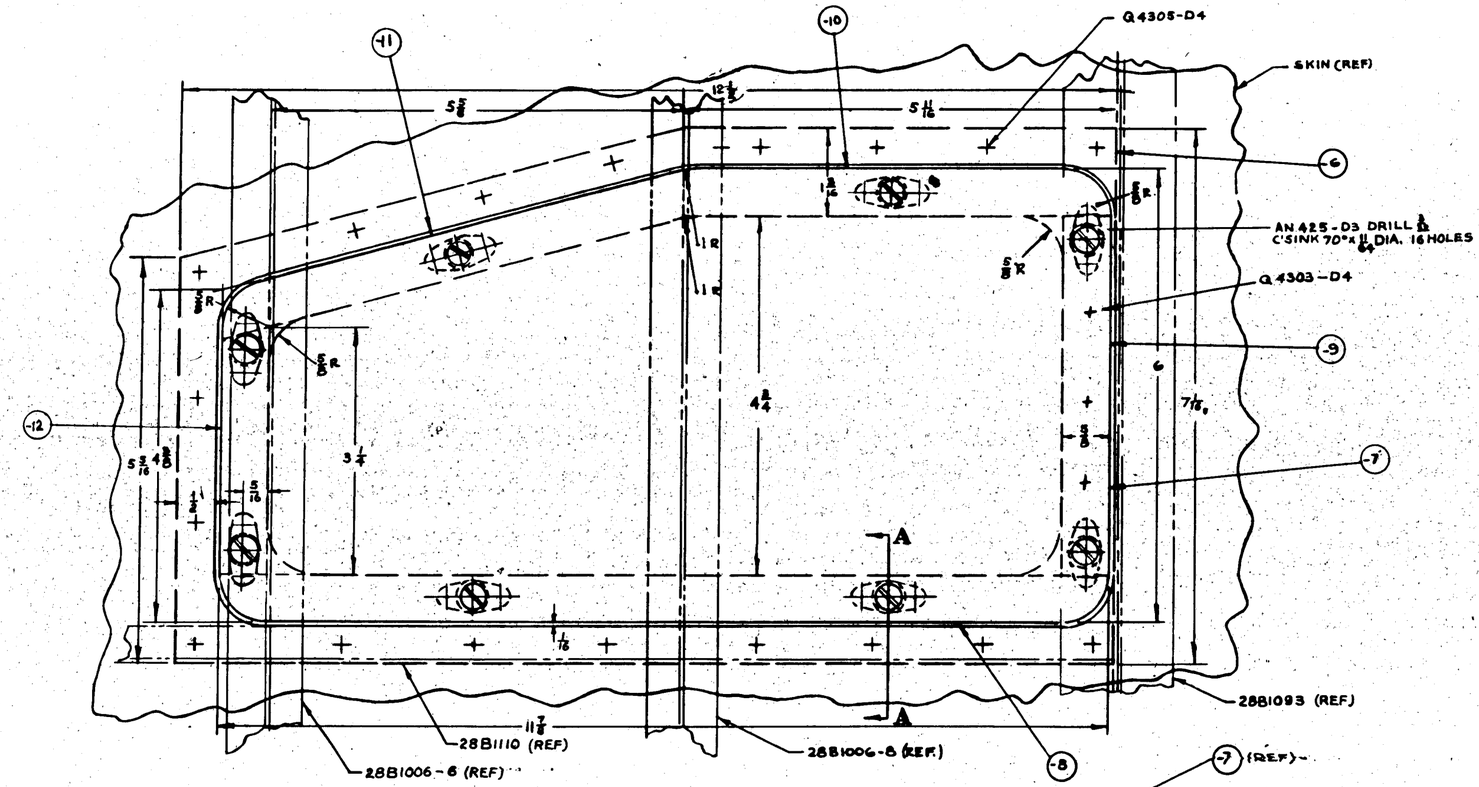

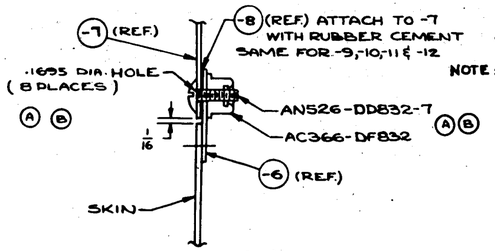

SECTION A-A (A)
FOR PBY-5 #198 TO 345 ONLY

NOTE: THIS VIEW IS DRAWN AS A FLAT PATTERN

FWD

L.H. LOOKING INB'D

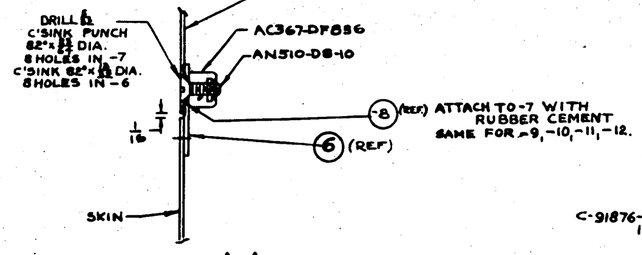
DRILL 17/64 C'SINK PUNCH .82" x 3/4 DIA. 8 HOLES IN -7 C'SINK .82" x 17/32 DIA. 8 HOLES IN -6
-7 (REF.)
AC367-DF836
AN510-DB-10
-8 (REF.) ATTACH TO -7 WITH RUBBER CEMENT SAME FOR -9, -10, -11, -12.
1/16
-6 (REF.)
SKIN

SECTION A-A (A)
FOR PBY-5 #90 TO 197 & PBY-5B #151 & ON

FINISH CODE

Z	ANTI-CORROSIVE PAINT
P	PAINTED
AP	ALUMINIZED PRIM
C	CADMIUM PLATE

GP GREEN PRIME

	AC366-DF832 (FOR PBY-5 #198 TO 345 AN526-DD832-7)	B	
	AC367-DF836 (FOR PBY-5 #90 TO 197 AN510-DB-10 & PBY-5B #151 & ON ONLY	B	
	AN425-D3	B	
	Q4305-D4	B	
	Q4303-D4	B	

C-91876-91 TO 345 →
151 & ON →

-0	PBY-5	28B1006	1														
-0	PBY-5B	28B1006	1														
LOOP System No.	MODEL	NEXT ASSY	QTY.														
REQUIREMENTS PER AIRPLANE																	
REPLACES			L.05 EACH QTY.														
REPLACED BY			ASY. QTY.														
Layout and Breakdown Drawings Dimensions Determined		SCALE															
1/32		12" = 1'-0"															
STAMP PART NUMBER WHERE SHOWN																	
PART No	STOCK	MATERIAL	SPEC.	LH REQ.	RH REQ.	LH REQ.	RH REQ.	LH REQ.	RH REQ.	LH REQ.	RH REQ.						
PARTS LIST PER ASSY.				-0	-2	-3	-4	-8									
-12	1/32 x 3/4 x 8 5/16	HYCAR		1													
-11	1/32 x 3/4 x 6 1/16	HYCAR		1													
-10	1/32 x 3/4 x 5 3/16	HYCAR		1													
-9	1/32 x 3/4 x 4 3/8	HYCAR		1													
-8	1/32 x 3/4 x PE	HYCAR		1													
-7	.090 x 6 1/2 x 11 7/8	24ST AL ALL SHT.	57A10	1													
-6	.020 x 12 1/8 x 7 1/4	24ST AL ALL SHT.	57A10	1													

A C		4/11/42	LINN	GERBER	ZUCK
NAVY	Z-P-GP	SUPERSEDES 6-4-43		CUSTER 6-22-43	WOLD
HEAT TREAT	FINISH	DRAFT	CHECK	STRUCT	MAT

NAME DOOR INSTALL-HULL FIN INSPECTION-L.H

CONSOLIDATED AIRCRAFT CORP. San Diego, Calif.

OPP. HAND

DWG. G SIZE 28B5060

4/43

R

LET	ALTERATION	DATE	BY
A	FOR -2 ASSY REVERSED SYM. OF AN525 DD (ORIGINAL) (MATL & SPEC. WAS K77F 6 X ½, AL. AL. EXT. 4049-T7 FOR -8 REPLACED STOCK, MATL & SPEC. WAS K54-71 X 12, AL. AL. EXT. 4049-T. ADDED TO FACE DETAIL OF -8. (WT. CHG. REQ.)	4-6-43	BRAUT
B	IN S/M FOR -8 REPLACED STOCK, MATL & SPEC. WAS K77F 6 X ½, AL. AL. EXT. 4049-T7 FOR -8 REPLACED STOCK, MATL & SPEC. WAS K54-71 X 12, AL. AL. EXT. 4049-T. ADDED TO FACE DETAIL OF -8. (WT. CHG. REQ.)	4-6-43	BRAUT
C	IN S/M FOR -6 REPLACED .156 X 2⅝ X 6½, 24ST ALCLAD SHT, SPEC. 00-A-362-7 WITH NOTE 2 FOR -8 REPLACED Y-2-A28T X 12 WITH NOTE 2 FOR -9 REPLACED 4049-T7 WITH "00-A-354-7" & FOR -7 REPLACED "4049-T" WITH "00-A-354-7" ON FACE OF DWG. ADDED MATERIAL TO EA. (NO WT. CHG.)	10-12-43	BRAUT

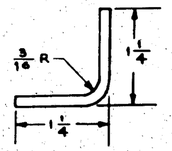

DETAIL OF -6
12" = 1'0"

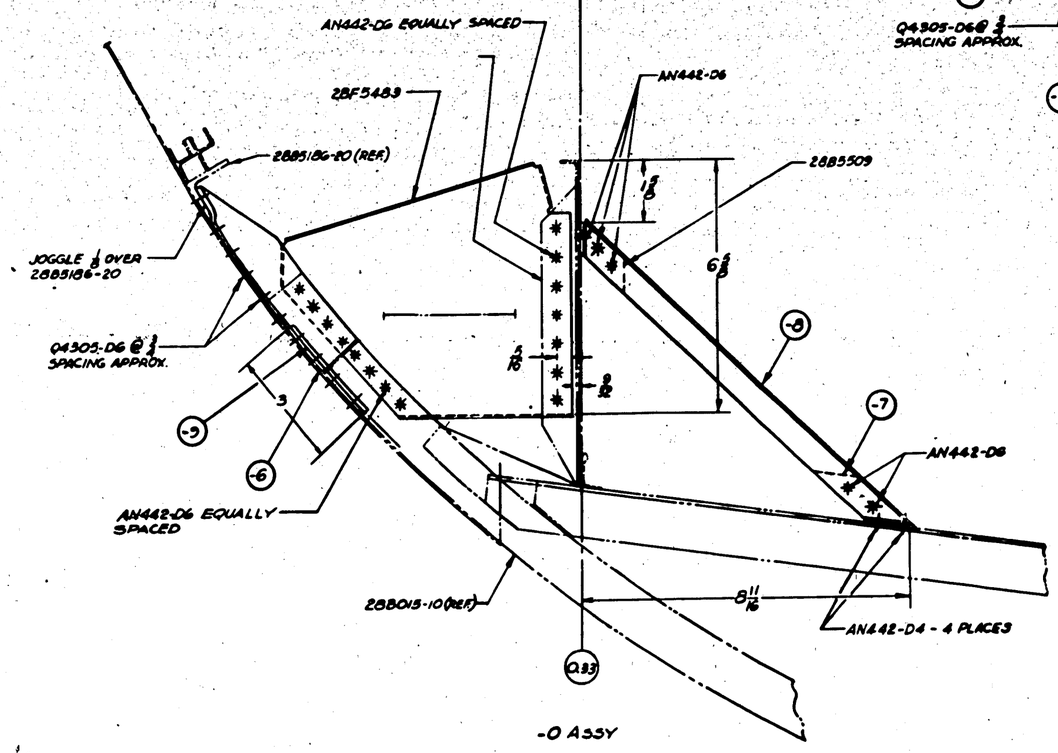

-0 ASSY

FORWARD

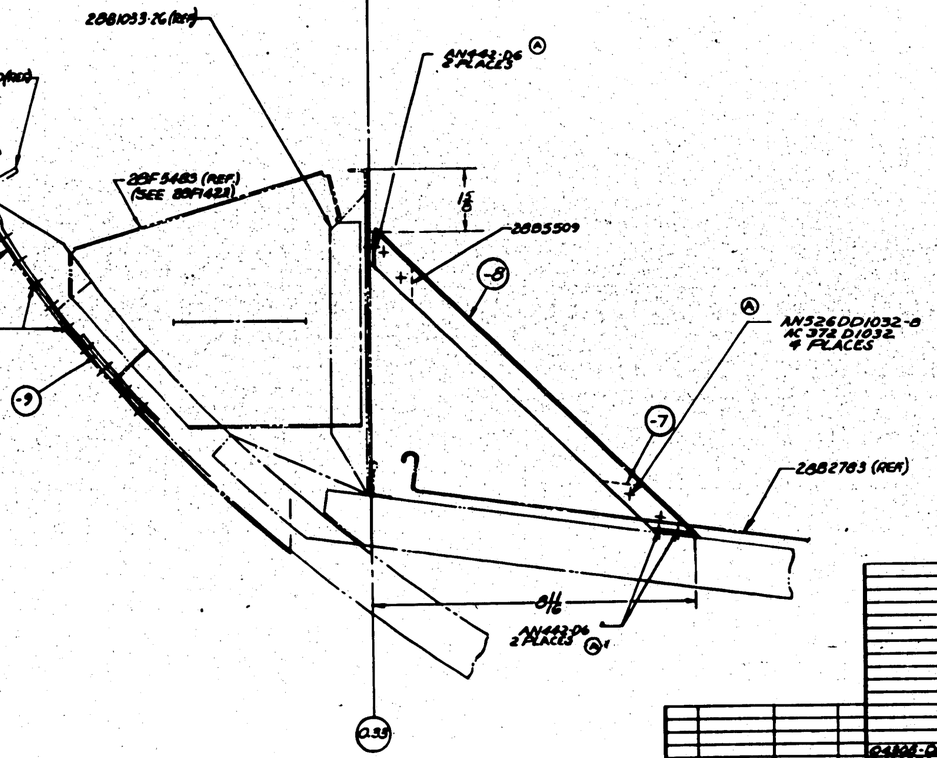

FORWARD

-2 ASSY.

NOTES:- (C)

1- MATERIAL FOR -6, MAY BE:
(A) .156 X 2⅝ X 6½, 24ST ALCLAD SHT, SPEC. 00-A-362-7 OR
(B) K77F X 6½, 24ST AL. ALLOY EXTR, SPEC. 00-A-354-7.

2- MATERIAL FOR -8, MAY BE:-
(A) Y-2-A28T X 12, OR
(B) K54-71 X 12, 24ST AL. ALLOY EXTR., SPEC. 00-A-354-7.

FINISH CODE	
Z	ANODIC TREATMENT
P	P-27 PRIMER
AP	ALUMINIZED PRIMER
C	CADMIUM PLATE

GP GREEN PRIME

C88476 #63 4 ON
C81876 #91 4 ON
4 ON 4 ON

CALC WT
-0 - 66#
-2 - 41#
-3 - 66#

PART NO	STOCK	MATERIAL	SPEC	-0 REQ	-2 REQ	-3 REQ	-4 REQ	-5 REQ
				LAST USED	LAST USED	LAST USED	LAST USED	LAST USED
-5	.091 X 1 X 3⅛	AL CLAD	00-A-362-7					
-8	NOTE 2	NOTE 2	NOTE 2					
-7	K54-71 X 12	AL. AL. EXT.	00-A-354-7					
-6	NOTE 1	NOTE 1	NOTE 1					

PARTS LIST PER ASSY.

REQUIREMENTS PER AIRPLANE

DISPLACED	NOTED	DISPLACED BY	NOTED

Last Or Consecutive Dash No. Of Drawing Or Specification: 5 7/32

SCALE: 6"=1'0"

STAMP PART NUMBER UNDER SHOWN

AS		SYSTEM	WELDING			BRAZING
NAVY NONE	Z-P-GP			WELDING		WELD
HEAT TREAT	FINISH	DRAFT	CHECK	STRESS	DAT	APPROV

GPP NAMED

NAME: ASSEMBLY-HULL-BOW REINFORCEMENT

CONSOLIDATED AIRCRAFT CORP. San Diego, Calif.

SIZE: C | DWG NO: 28B5061

R 190

LET		DATE	BY	LET	ALTERATION	DATE	BY
				A	ADD #10 HOLES (49) NEG. WT. CH.		
				B	#10 HOLES (13) WAS (10) & (17) WAS (14) & (13) WAS (10) ADD 1½ SPACING & -10 & NOTE "CEMENT" ETC.		
				C	CHG'D NOTE "FORM THIS -- AROUND 28B5009" TO "FORM THIS -- OF 28B5069-7" & "FORM THIS -- AROUND 28B5070" TO "FORM THIS -- OF 28B5070-7" NO WT. CHG.		
				D	ADDED NOTE #3 NO WT. CHG.		
				E	ADDED SECTION A-A DIMS. 10 13/16 & 7 23/32 WERE 11 & 8¼; ADDED DIMS 7/8 & ¾; Q4305D4 WAS AN426AD WT. CHG. NEG.		
				F	REMOVED Q4303 & ADDED Q4305D4. WT. CH. NEG.	3-17-43	
				G	REMOVED -10. WT. CH. NEG.	3-17-43	
				H	-11 WAS -9. DIM. 1 WAS 3/4. 7/8 WAS 5/8. WT. CHG. NEG.		
				J	REMOVED HOLES & RIVETS ATTACHING 28B5073, 28B5074 & 28B5075, REPLACED WITH SPOTWELDING, ADDED NOTE "SPOT WELDING - APPROX. 5/8" NO WT. CHG.		

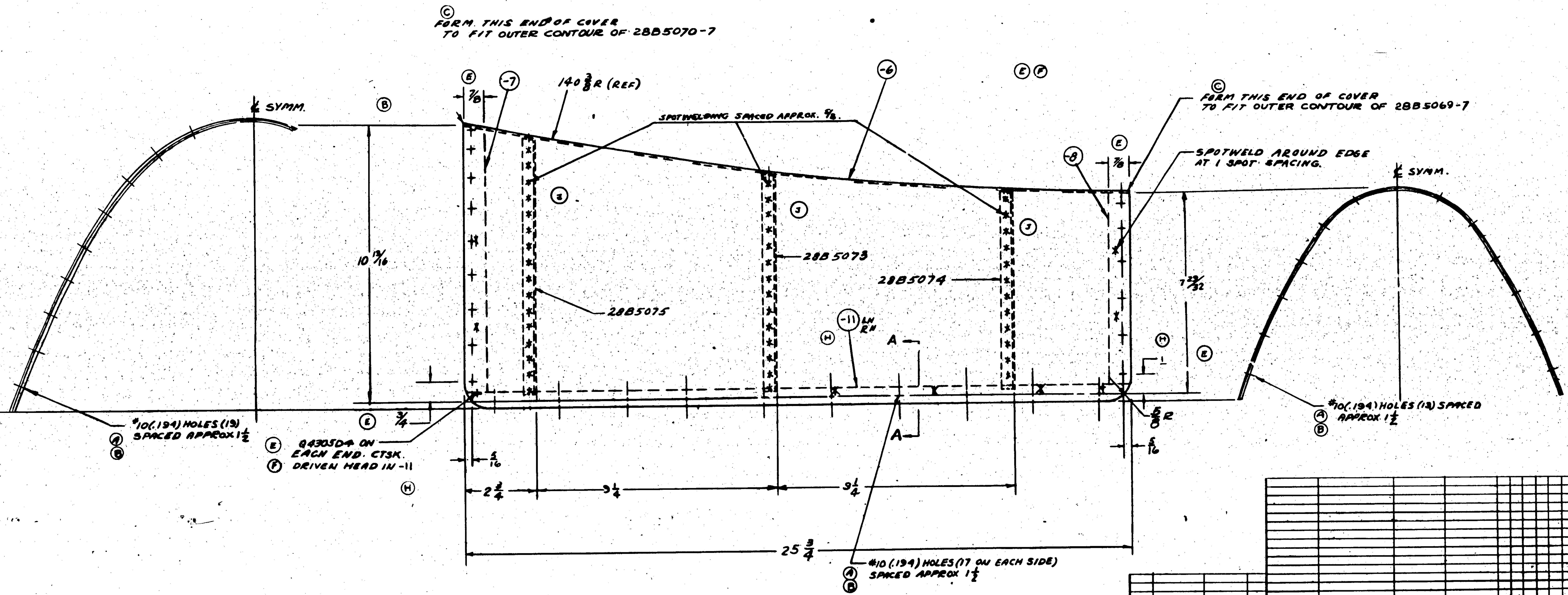

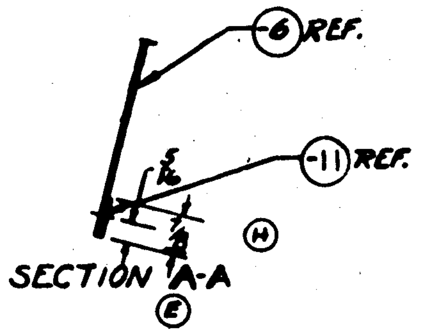

NOTE:-
1 FOR FINISH SEE 28B1000 SHEET #1

(D) 3. ON EACH SIDE OF -6 STENCIL THE FOLLOWING IN BLACK ½ INCH LETTERS:- "ACCESS DOOR TO ANTI-ICING HEATER."

C. NO. 2(3)464 →

CONT. 91876 #90 & 346 & ON

ASSY DASH NO.	MODEL	NEXT ASSY	REQ.
	PBY-5A	28B5076	1
0	PBY-5	28B5076	1

REQUIREMENTS PER AIRPLANE

REPLACES — CALC. WT.

REPLACED BY — ACT. WT.

LIMIT ON DIMENSIONS UNLESS OTHERWISE SPECIFIED: ± 1/32 — SCALE 6" = 1'-0"

STAMP PART NUMBER WHERE SHOWN

PART No	STOCK	MATERIAL	SPEC.	REQ. -0	REQ. -2	REQ. -3	REQ. -4	REQ. -5
Q4305D4								
28B5075				1				
28B5074				1				
28B5073				1				
-11	.040 X 1 X 26½	ALCLAD	AN-A-362-II	2				
-8	.040 X 1 X 23	ALCLAD	24ST-T	1				
-7	.040 X 1 X 32	ALCLAD	24ST-T	1				
-6	.040 X 27 X 32	ALCLAD	24ST-T	1				

PARTS LIST PER ASS'Y

A.C. — NAVY NONE — HEAT TREAT — NOTED — FINISH — DRAFT — CHECK — STRUCT — MAT — APPRD.

OPP. HAND

NAME COVER ASSY-HULL-LOWER FIN

CONSOLIDATED AIRCRAFT CORP. SAN DIEGO, CALIF.

G 28B5071

ECO. A86947
CAC CHG. 23-16

LET	ALTERATION	DATE	BY	LET	ALTERATION	DATE	BY
A	ON -7 "STENCIL" ACCESS- "BRACKET" NO WT CHG.						
B	AN425-D3 ITEM WAS AN426-D3 (NO WT CHG.)	3-26-43					
C	ON -9 ITEM PER -8 & -10 REPLACED "KE401 F.H. AL. AL. EXT. 4040-T" WITH "Y-2-A36T X 10½" PER -9 REPLACED "KE401 F.H. AL. AL. EXT. 4040-T" WITH "Y-2-A36T X 11" (WT. CHG. REQ.)	6-19-43					
D	ON FACE OF DWG. ADDED SECT. D-D. A.I.R. #5720. (NO WT. CHG.)	4-21-43					
E	IN BOM FOR -8 & -10 "NOTED" WAS "Y-2-A36T X 10½" PER -9 "NOTED" WAS "Y-2-A36T X 10½" & "Y-2-A36T X 11" TO FACE APPR. MAT. NOTE NO. 1 & 2. NO WT. CHG.	10-11-43	

28B1093-70(REF.)
JOGGLE -6
SKIN (REF.)
-8 (REF.)
28B1093-2(REF.)
JOGGLE -8 (REF.)

SECTION D-D

28B1006-10(REF.)
-8 (REF.)
TRIM 45° BOTH ENDS
AN442-D4
TRIM TO 5/8
-9 (REF.)

SECT. B-B

JOGGLE -8
-8
28B1006-104 (REF.)
Q4305-D5
28B1093-70(REF.)
APPROX. SPACING
28B1093-2 (REF.)
28B1093(REF.)
D
B
B
1/32 (REF.)
1/4
1/2R
CUT OUT IN SKIN
3/4R
3/8
1 APPROX.
28B1006-10(REF.)
7 1/2
5 11/16
C
C
1 1/8 APPROX SPACING
5/16
ACCESS- RUDDER PULLEY BRACKET
A
A
-7
-9
-6
-10
28B1110(REF.)
.169 (10) HOLES
AC 367 DF 836 (10)
AN 510-D8-10 (10)
(B) AN 425-D3 (20)
STENCIL ON -7 (REF.) 1/2" BLACK LETTERS (A)

28B1093(REF.)
-10 (REF.)
SKIN (REF.)
-6 (REF.)

SECT. C-C

-7 (REF.)
-9 (REF.)
Q4305-D5
-10 (REF.)
AN 442-D4

SECT. A-A

MATERIAL NOTES
1.- MAT'L. FOR -8 & -10 MAY BE-
(A) Y-2-A28T x 10½, OR
(B) KE401 x 10½, AL. AL. EXTR., SPEC. QQ-A-354-T
2.- MAT'L. FOR -9 MAY BE-
(A) Y-2-A28T x 11, OR
(B) KE401 x 11, AL. AL. EXTR., SPEC. QQ-A-354-T

MCR. 178-11
MCR. 29-16

APPROVED FOR TOOLING BY R.B. HUMPHREYS.

PART NO	STOCK	MATERIAL	SPEC.	LH REQ.	RH REQ.	LH REQ.	RH REQ.	LH REQ.	RH REQ.
	PARTS LIST PER ASSY.			0	-2	-3	-4	-8	
-10	NOTED	NOTED	NOTED						
-9	NOTED	NOTED	NOTED						
-8	NOTED	NOTED	NOTED						
4	0.040 x 8½	ALCLAD	4T43-T						
4	.016 x 8 PIN	ALCLAD	4T43-T						

Q4305-D5
AN442-D4
AN510-D8-10 10
AN425-D3 20
AC867-DF-836 10

MAT'L		FINISH	
DRWG	10-0½		
HEAT TREAT		QUALITY	GAUGE

NAME INSTALL.-HULL FIN INSPECTION DOOR
CONSOLIDATED AIRCRAFT CORP. SAN DIEGO, CALIF.
SHP. NAND
SIZE G
DWG. 28B5072

ALTERATION	DATE	BY

LET	ALTERATION	DATE	BY
A	ADDED DIMS. 3½, 3¾, 4¾		
	8½, 4¾, 4⅛, 6½		
	DIMS. 18¹¹/₃₂ WAS 18²³/₃₂, 12		
	WAS 10⅞; 7⅝ WAS 8¼; 13⅝		
	WAS 8⅝; 15¾ WAS 2⅜	10⅞	
	WAS 10⅜; 13 WAS 13⅞; 19⅝		
	WAS 20. WT. CNG. NEG.		
B	AN345-3 WAS AN345C3½		
	AN510-3-12 WAS AN510-C3-12		
	NO WT. CNG.		
C	DIM. 3¼ WAS 6¼. WT. CNG.		
D	ADDED 2285274 (4) AN426-E		
	16 (2) WAS AN426-3-12		

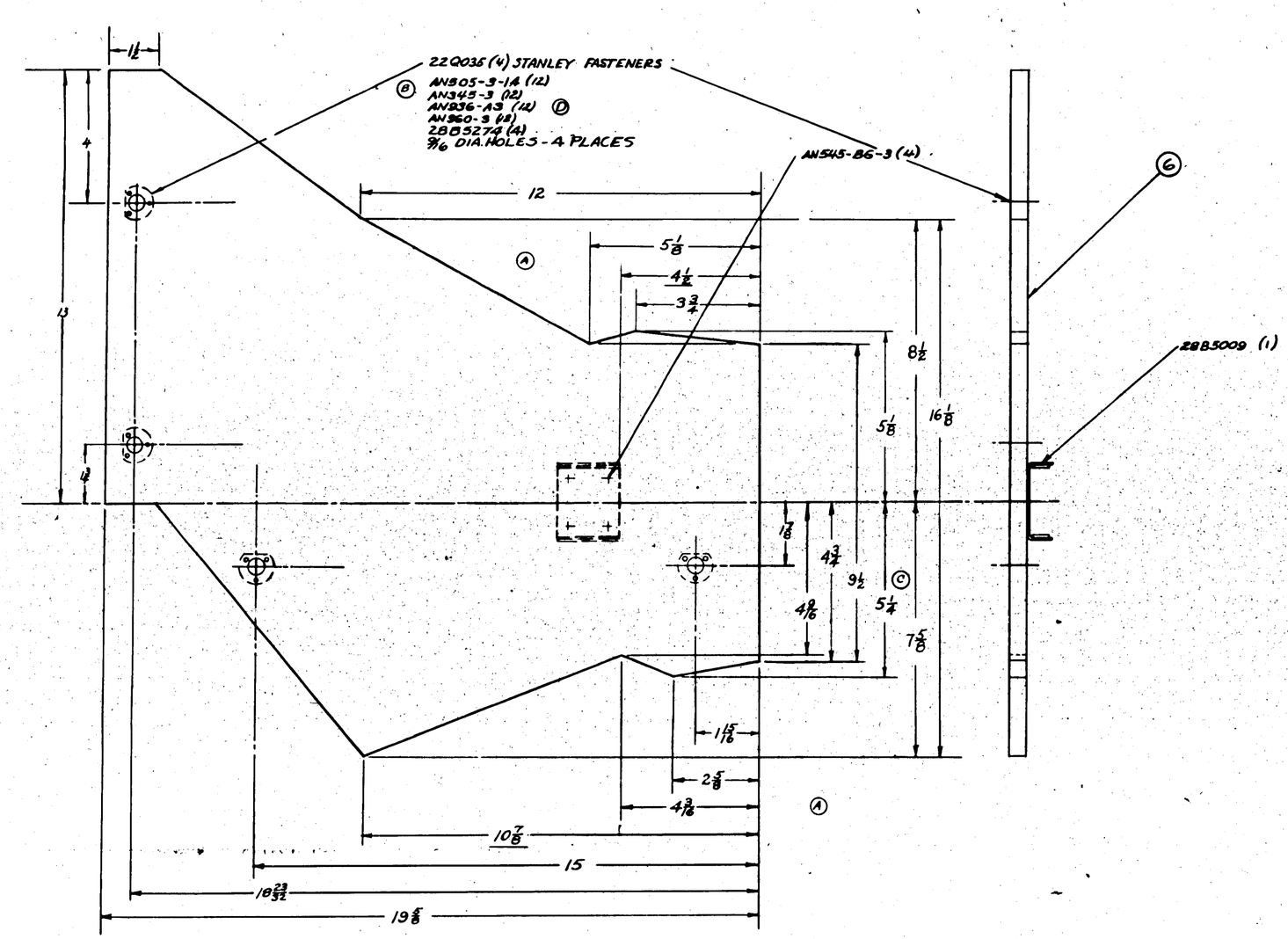

FINISH FOR PLYWOOD FLOOR

1 COAT L-60 WATERPROOF SEALER OR EQ. &
2 COATS #33 GLOSS LAC. OR EQUIV.
ON TOP SURFACE ALSO APPLY 1 SPRAY COAT OF E.C. 244 SEALER TREAD COATING OR EQUIV.

NOTE - UNTIL ALGOMA IS AVAILABLE, USE 3/8 PLYWOOD SPEC AN-NN-P-511

ASSY DASH NO	MODEL	NEXT ASSY	QUAN
	P8Y-5A	28B5100	1
	P8Y-5B	28B5100	1
	P8Y-5	28B5100	1

REQUIREMENTS PER AIRPLANE
REPLACES 2.2 CALC WT
REPLACED BY ACT WT
UNLESS OTHERWISE SPECIFIED: SCALE 1/22 6"=1'0"
STAMP PART NUMBER WHERE SHOWN

PART NO	STOCK	MATERIAL	SPEC	LH RH REQ -0	LH RH REQ -2	LH RH REQ -3	LH RH REQ -4	LH RH REQ -5
	AN960-3			12				
	AN936-A3			12				
	AN426A-3			2				
	AN509-3-18			2				
	AN545-B6-3			4				
	2885274							A
	2700035							A
	2885009							1
	-4 21¼ x 20¼ x ¾	ALGOMA (COM)	(SEE NOTE)					

PARTS LIST PER ASSY.

C 13595
CONT 98477 IN 15 ON
CONT 91876 IN 9 ON

A C
NAVY
HEAT TREAT
NOTED
FINISH
J.M. KLUGMAN 9/23/42 DRAFT
CHECK STRUCT MAT APPROV ENG
S.L. CYPHERS ELDER BRANSTROM

NAME FLOOR - HULL - WALKWAY - STA. 6.8 TO 7.0
OPP HAND NONE
DWG G
SIZE 28B5078
CONSOLIDATED AIRCRAFT CORP. SAN DIEGO, CALIF

LET	ALTERATION	DATE	BY
A	1% ACC CHAN ASS'D OF -8 -9 STIFFENERS & 2 PC SKIN ASS'D (2 REQ'D) R/H & L/H		
B	1% ACC CHAN -7 SKIN ASS'D CHANGE DIMENSIONS & ADD [illegible]		
C	CHAN A AND B TO Q4303-04		
D	[illegible]		

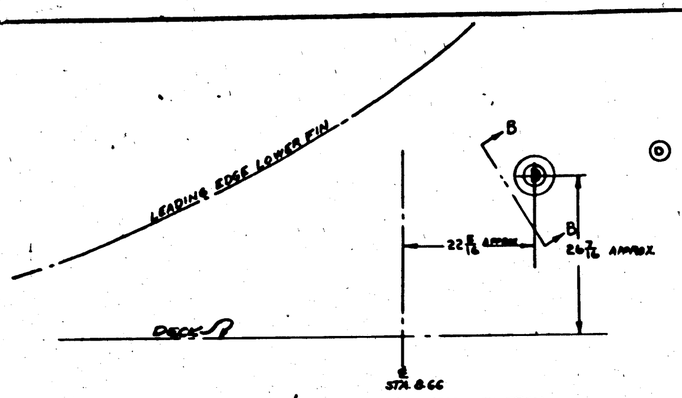

1/8 SIZE INSTALLATION SKETCH

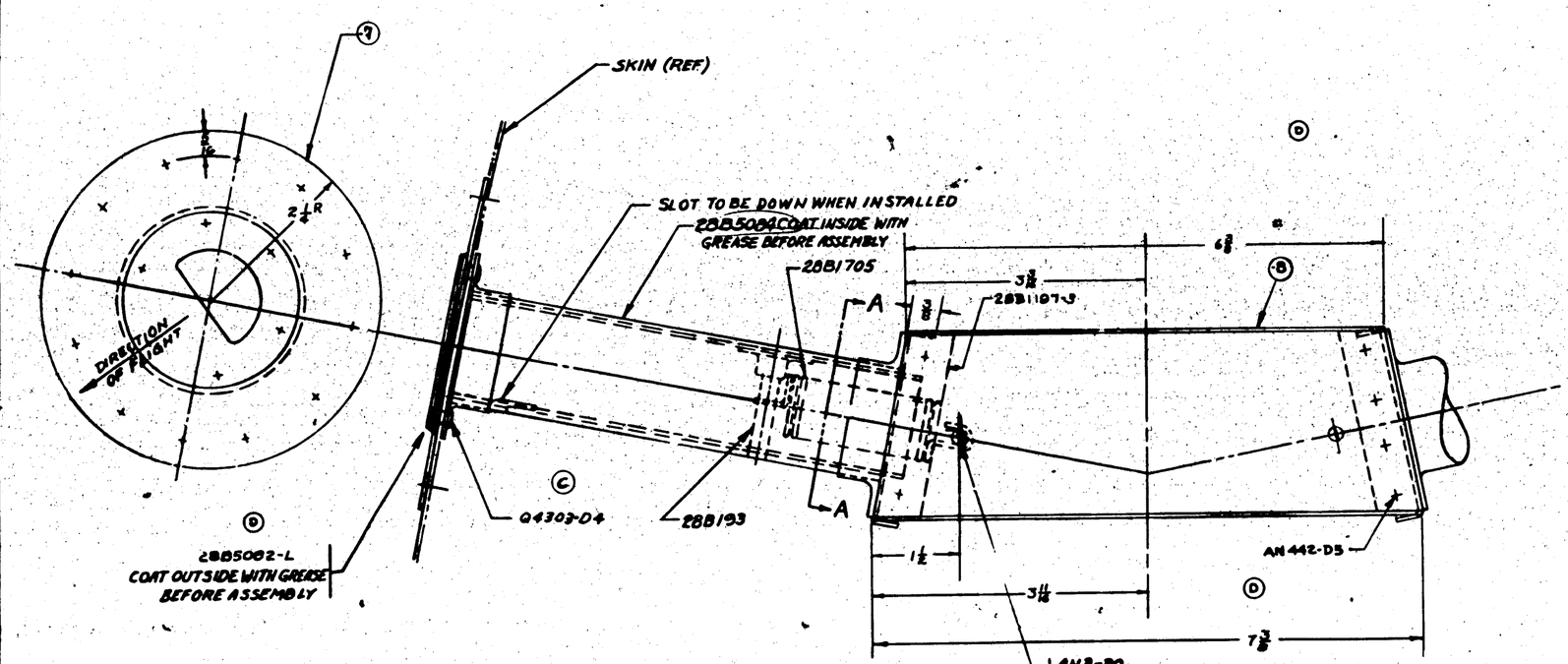

VIEW B-B IN TRUE PLANE OF STEP

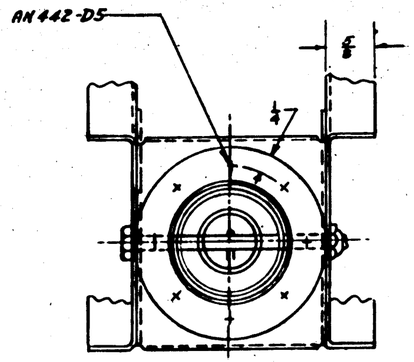

SECTION A-A

NOTE:
1. STEPS ARE TO BE SET IN NORMAL TO THE PLATING SURFACES & FINGER CATCH SET IN DIRECTION OF FLIGHT BEFORE RIVETING IN PLACE OR MAKING MIDDLE ATTACHMENT.
2. DIMENSIONS FOR LENGTH OF -8 CHANNEL ARE APPROXIMATE. CUT THESE PIECES 1/2 INCH LONG TO BE TRIMMED TO SIZE WHEN STEP IS INSTALLED IN THE FIN.

APPROVED FOR TOOLING BY
P.B. Humphreys

MCR 178-11
MCR 85(16)

Q4303-04	
AN442-D5	
AN3-30	
AN310-3	
AN380C2-2	

PBY-5A 2BB1197 /
PBY-5 2BB1197 /

PART No	STOCK	MATERIAL	SPEC	LH REQ -0	RH REQ -2	LH REQ -3	RH REQ -4	LH REQ -5	RH REQ -6
2BB1197	2.5" x 4.5" x 41"	ALCLAD	24ST	1					

PARTS LIST PER ASSY.

SCALE 12" = 1'-0"

AC
PAINT NONE
HEAT TREAT
Z-P-GP
FINISH

NAME STEP - INSTALLATION - HULL - LOWER FIN

CONSOLIDATED AIRCRAFT CORP. San Diego, Calif.

DWG NO. 2BB5083
SIZE G

LET	ALTERATION	DATE	BY	LET	ALTERATION	DATE	BY
				A	CREATED NEW DWG.	4-7-43	
				B	CHGD DIMS 2 To 1 3/4 & 7 1/4 To 8 1/4. CHGD STOCK SIZE OF -7 FROM 7 1/4 To 8 1/4. REMOVED -8 & ADDED -9. CHGD AN526DD1032-8 To -10. REMOVED AN30 ... (11) & AC372 D1032(11) & ADDED AN442D6 WT.CHGD.	4-7-43	

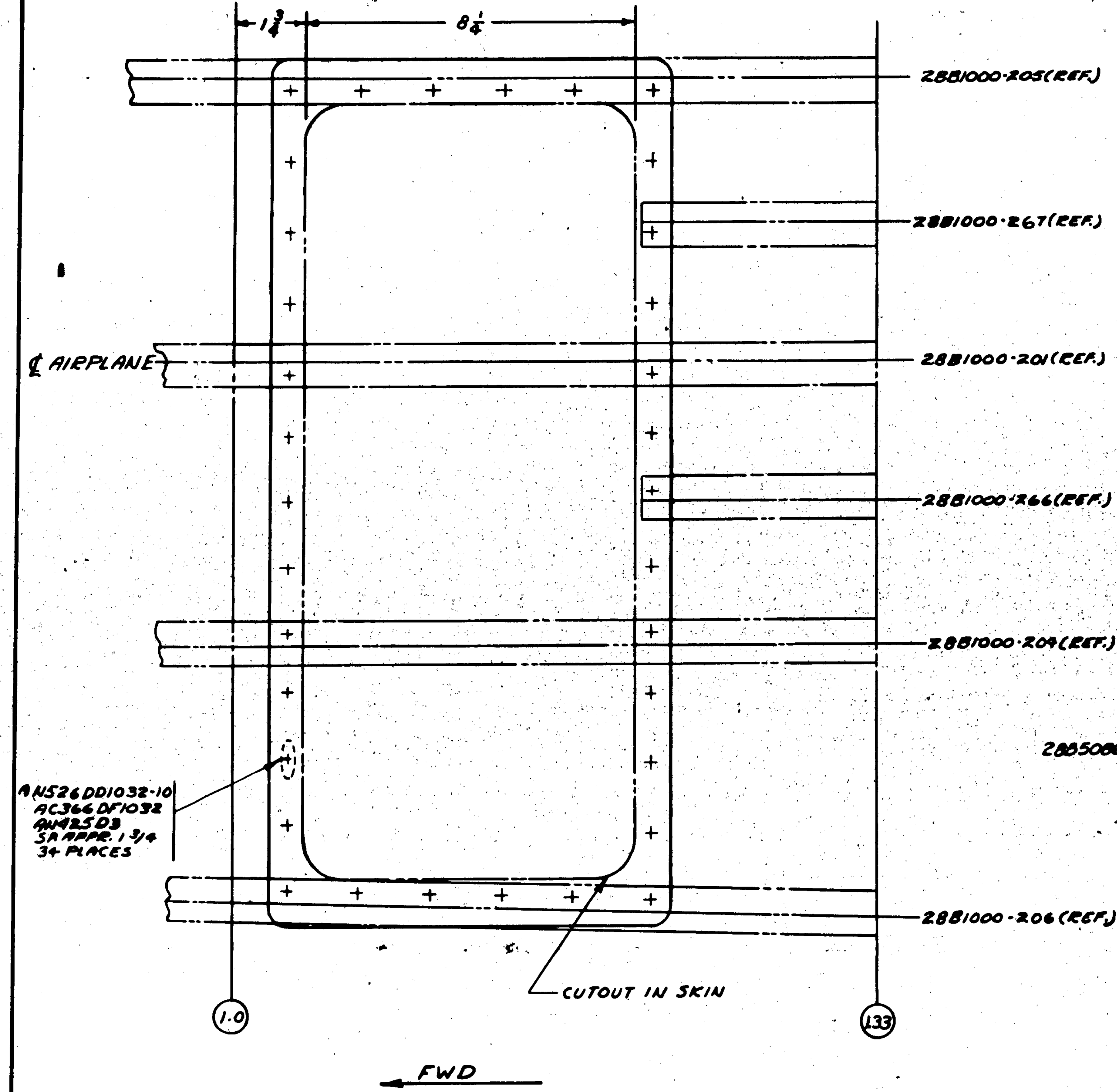

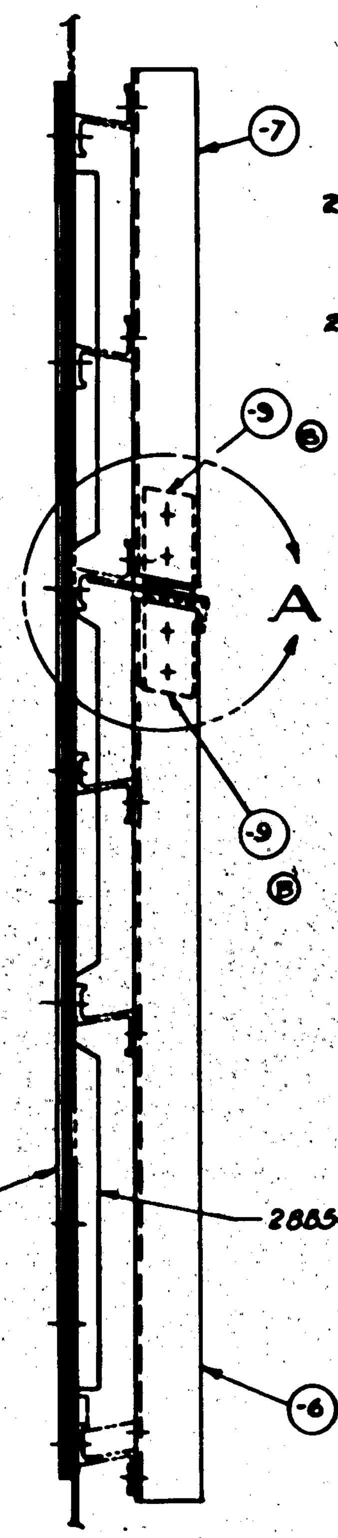

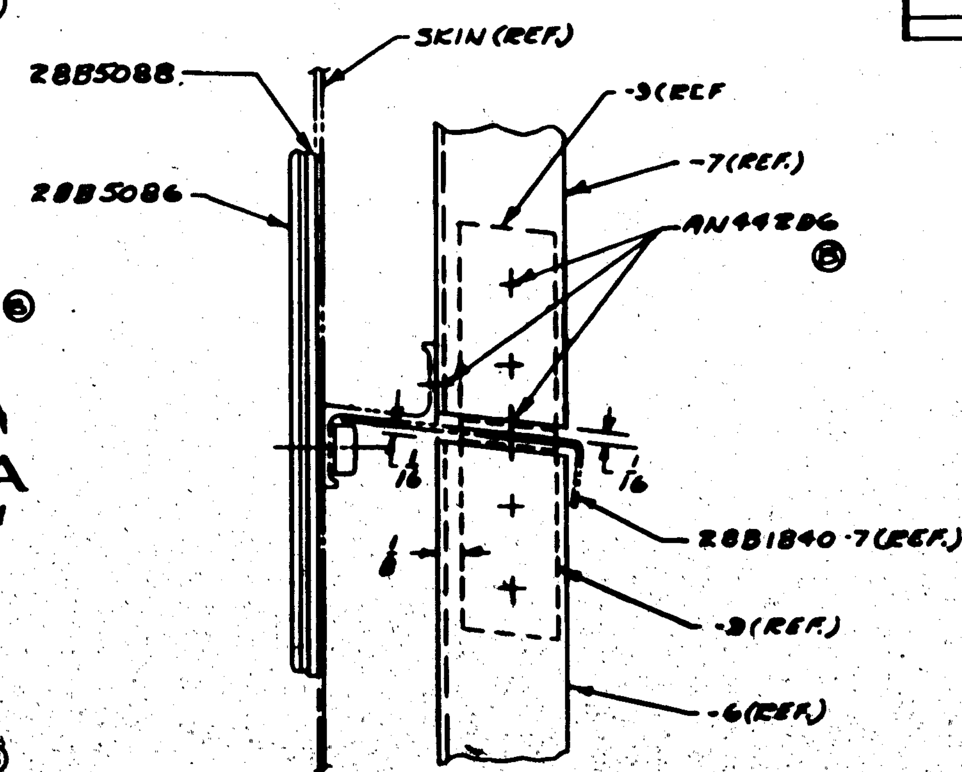

DETAIL A
SCALE 12"=1'0"

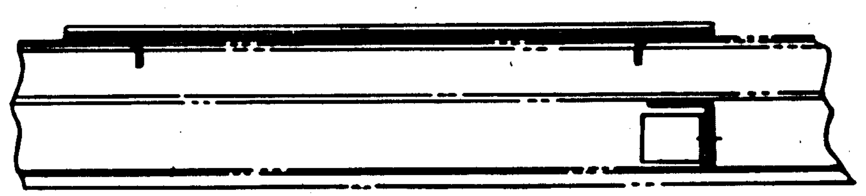

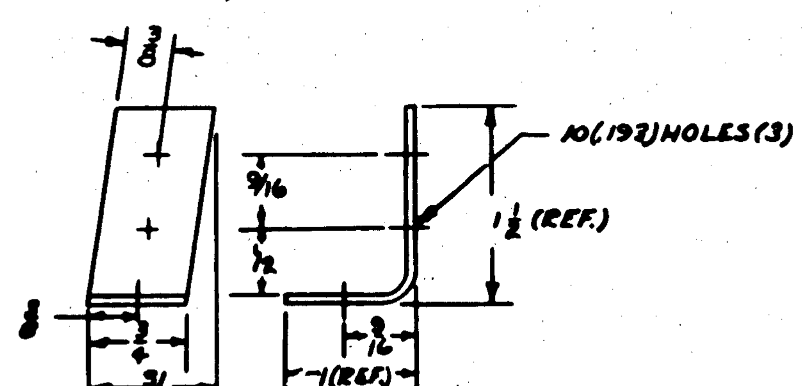

DETAIL -9
SCALE 12"=1'0"

M.C.R. 203-1
M.C.R. 101-10

APPROVED FOR TOOLING BY
E. E. Dalton
4-20-43
Change B

	DAY-5A	28B1000	1
	DAY-5	28B1000	1
ASSY. DASH NO.	MODEL	NEXT ASSY.	REQ.

REQUIREMENTS PER AIRPLANE

REPLACES		
E.O. A98435A	2.3	CALC. WT.
REPLACED BY		ACT. WT.
LIMIT ON DIMENSIONS UNLESS OTHERWISE SPECIFIED: ±.03R	SCALE: 6"=1'(MARKED)	

STAMP PART NUMBER WHERE SHOWN

PART No	STOCK	MATERIAL	SPEC.	REQ. -0	REQ. -2	REQ. -3	REQ. -4	REQ. -5
AN442D6								
AN425D3								
AN526DD1032-10				34				
AC366DF1032				34				
28B5088				1				
28B5086				1				
-9	.064 x 28T x 1 1/2			2				
-7	K78 1 1/2 x 8 1/4	AL.AL.EXT.	26A24T	1				
-6	K78 1 1/2 x 14 3/4	AL.AL.EXT.	26A24T	1				

PARTS LIST PER ASSY.

A C						
NAVY NONE	Z-P-6P	DRAFT	CHECK	STRUCT	MAT.	APPROV. / ENG.
HEAT TREAT	FINISH	4-7-43				

NAME **INSTALLATION-HULL-ACCESS DOOR**

OPP. HAND
DWG. SIZE G — 28B5087

CONSOLIDATED AIRCRAFT CORP. SAN DIEGO, CALIF.

LET	ALTERATION	DATE	BY
	"K1559 X 18½" DURAL, 4AA ST" WITH "Y-5-AST X 19¾" FOR - 18⅝ REQ.		
	PLACED "K1559 X 4⅜" DURAL EXT. 4AA ST" WITH "Y-5 AST X 4¾" FOR -15⅛ REQ. REPLACED "K1559 X 4½" DURAL EXT. 4AA ST" WITH "Y-5 AST X 4¾" FOR -15⅛ REQ.		
K	IN B/M REPLACED "Y-5-AST" WITH "4 SPEC. WITH "NOTED" FOR - 6½, 7½, -8, -9½, -11, -14½, -15½	5-1-43	KEMMET
	ON FACE ADDED MAT. NOTE "2"	29-43	CRAIG

LET	ALTERATION	DATE	BY
A	INCREASED OVERALL WIDTH OF FLOOR - ADDED DIM. 9⅛ & 4		
B	ADDED - 144-154-16		
C	REDUCED LGTH OF -7 LONGITUDINAL -11		
D	LONGITUDINAL -11		
E	-15 INCREASED IN WIDTH		
F	22F073 WAS ZERO - ADDED KEMMET		
	SPEC. IN B/M	2/1940	DSK
G	ADDED ⅞ & 1 DIA HOLES - 4 PLACES	11/1940	F.M.M.
H	ADDITION OF FASTENER SPACE	10/1941	A.M.M.
	REMOVED 288138 FROM B/M & FACE OF DRG. ADDED NOTE.	7-9-41	KEMMET
J	IN B/M FOR - 6½ REPLACED "K1559 X 21, DURAL, 4AA ST" WITH "Y-5-AST X 21" FOR - 7½ REPLACED "K1559 X 21 DURAL, 4AA ST" WITH "Y-5 AST X 14" FOR - 8 REPLACED "K1559 X 9, DURAL, 4AA ST" WITH "Y-5-AST X 13" FOR - 9½ REPLACED "K1559 X 13, DURAL, 4AA ST" WITH "Y-5-AST X 13" FOR - 11 - REPLACED		

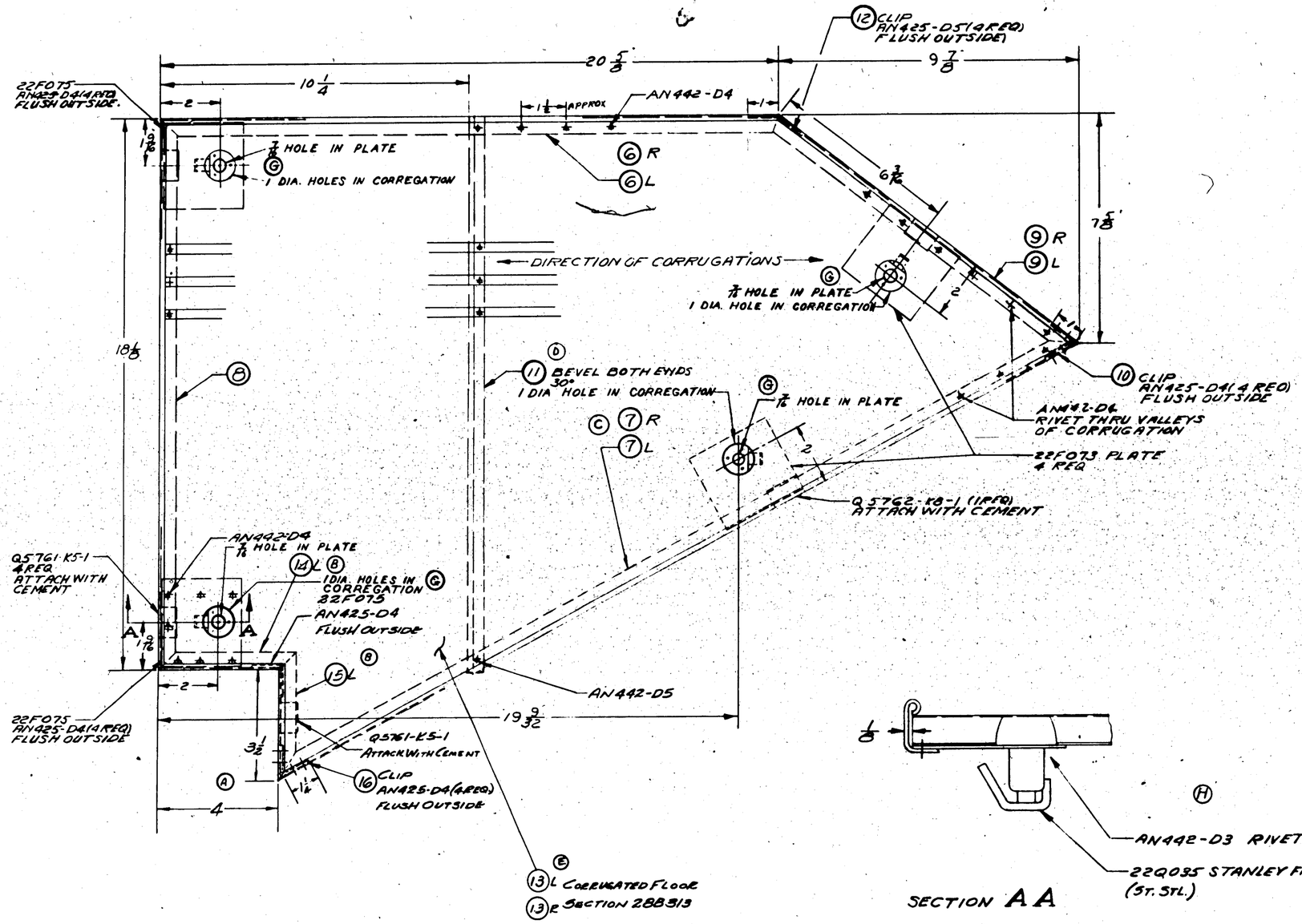

SECTION AA

NOTE

1.- ANCHOR NUTS & STANLEY FASTENERS ARE TO BE FINISHED AS PER SPEC. ZF-28-006 #108.28 - SPEC. ZF-28-006 #108.28: ANCHOR NUTS (STEEL) & STANLEY FASTENERS, APPLY 1 (H) BRUSH COAT OF ZINC CHROMATE PRIMER TO THE CONTACTING SURFACES OF THE NUT OR FASTENER. APPLY 2 COATS OF PRIMER TO THE SUPPORTING SURFACE. ASSEMBLE WITH ZINC CHROMATE PASTE IN THE JOINT SUCH THAT EXCESS MATERIAL IS SQUEEZED OUT AT ALL BOUNDARIES. REMOVE THE EXCESS MATERIAL IN SUCH A MANNER AS TO FORM A FILLET.

(K) 2.- MATERIAL NOTE:
MATERIAL FOR - 6½R, -7½R, -8, -9½R, -11, -14½R, -15½R MAY BE:
(A) Y-5-AST, OR
(B) K1559, AL. AL. EXT., SPEC. - QQ-A-354-T.

+ = RIVETS	(SIZE INDICATED AT INTERVALS BY THE FOLLOWING MARKINGS.)	
✦ = 1/8	✦ = 5/32	✳ = 3/16
⊕ = 1/4	⊞ = 5/16	⊛ = 3/8
⚓ = SPOTWELD		

PART No.	STOCK	MATERIAL	SPEC.	LH RH REQ.	LH RH REQ.	LH RH REQ.	LH RH REQ.	LH RH REQ.
	PARTS LIST PER ASSY.			-0	-2	-3	-4	-5 11
	AN425D5							
	AN425D4							
	AN442D4							
	AN442D6							
	22F073						4	4
	22Q035						4	4
(H)	22F073						5	5
	16 COR'G 7/16 x 2¾	ALCLAD	4AA B T					
	15R NOTED X 9¼	NOTED	NOTED					
	15L NOTED X 4¼	NOTED	NOTED					
	14R NOTED X 4¾	NOTED	NOTED					
	14L NOTED X 4¾	NOTED	NOTED					
	13R 023 x 3.00 x 13¾	DURAL	4AA B T					
	13L 023 x 3.00 x 13¾	DURAL	4AA B T					
	12 COR'G 7/16 x 2½	ALCLAD	4AA B T					
	11 NOTED X 13	NOTED	NOTED					
	10 COR'G 7/16 x 2½	ALCLAD	4AA B T					
	9R NOTED X 13	NOTED	NOTED					
	9L NOTED X 13	NOTED	NOTED					
	8 NOTED X 18	NOTED	NOTED					
	7R NOTED X 21	NOTED	NOTED					
	7L NOTED X 21	NOTED	NOTED					
	6R NOTED X 21	NOTED	NOTED					
	6L NOTED X 21	NOTED	NOTED					

29-5748 ME 28B5139	1 EA			
REPLACE 28B5139	1 EA			
PAYS 28B5139	1			
PAYS 28B5139	1			

LAST DASH NO.	MODEL	NEXT ASSY.	WHL
REQUIREMENTS PER AIRPLANE			
REPLACES		SALE QTY.	
REPLACED BY		ASS'Y QTY.	
LIST OF SUBASSEMBLIES SHOWN / SUBASSEMBLIES SHOWN	SCALE 6"=10"		
STAMP PART NUMBER WHERE SHOWN			

A C NAVY SPEC	NOTED	WHEEL				
HEAT TREAT	FINISH	DRAFT	DESIGN	STRUCT	MAT.	APPROV.

NAME FLOOR-HULL-WAIST GUNNERS STA. 6.4-6.7

CONSOLIDATED AIRCRAFT CORP. SAN DIEGO, CALIF.

OPP. HAND 28B5138-R

SIZE G | DWG. 28B5138

28B5138

E.O. A-3508
28-5ME, 28-5MR.

E.O. A3585, PB"-5

LET	ALTERATION	DATE	BY
A	REVISED AN442-D5 THRU -6-7 & STRINGERS; REPLACED WITH NOTE AS SHOWN. ADDED TO BILL AN526-DD1032-7 AN365-D1032	9-21-41	REVISED
B	V.I.N.H. R-A AND R-B ADDED	10-31-41	PEK & PEKELNEY
C	IN B/M -6 L/R WAS "K1559 .071" DURAL 46A9-T" -7 1/8 WAS "K1559 .125 DURAL 46A9-T" WT CHG NEG.	4-30-42	CRAIG
D	IN B/M REA FOR -6 1/2" WAS "Y-5-A5T X 17 1/8" WITH "NOTED" FOR -7 1/2" WAS "Y-5-A5T X 17 1/8" WITH "NOTE" ADDED NOTED FOR MAT'L SPEC. FOR -6 & -7 R. ON FILE ADDED MAT. NOTE. NO WT. CHG.	10-30-42	CRAIG

1.-MATERIAL NOTE:
1-MATERIAL FOR -6L & -6R MAY BE:
(A) Y-5-A5T X 17 1/8, OR
(B) K1559 X 17 1/8, AL. AL. EXTR., SPEC.-QQ-A-354-T.
2-MATERIAL FOR -7L & -7R MAY BE:
(A) Y-5-A5T X 15 5/8, OR
(B) K1559 X 15 5/8, AL AL. EXTR., SPEC.-QQ-A-354-T.

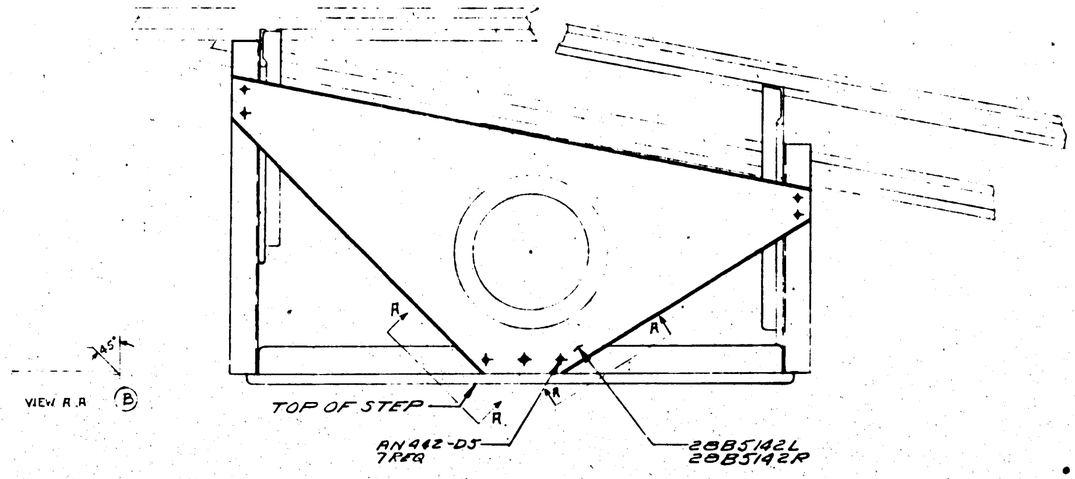

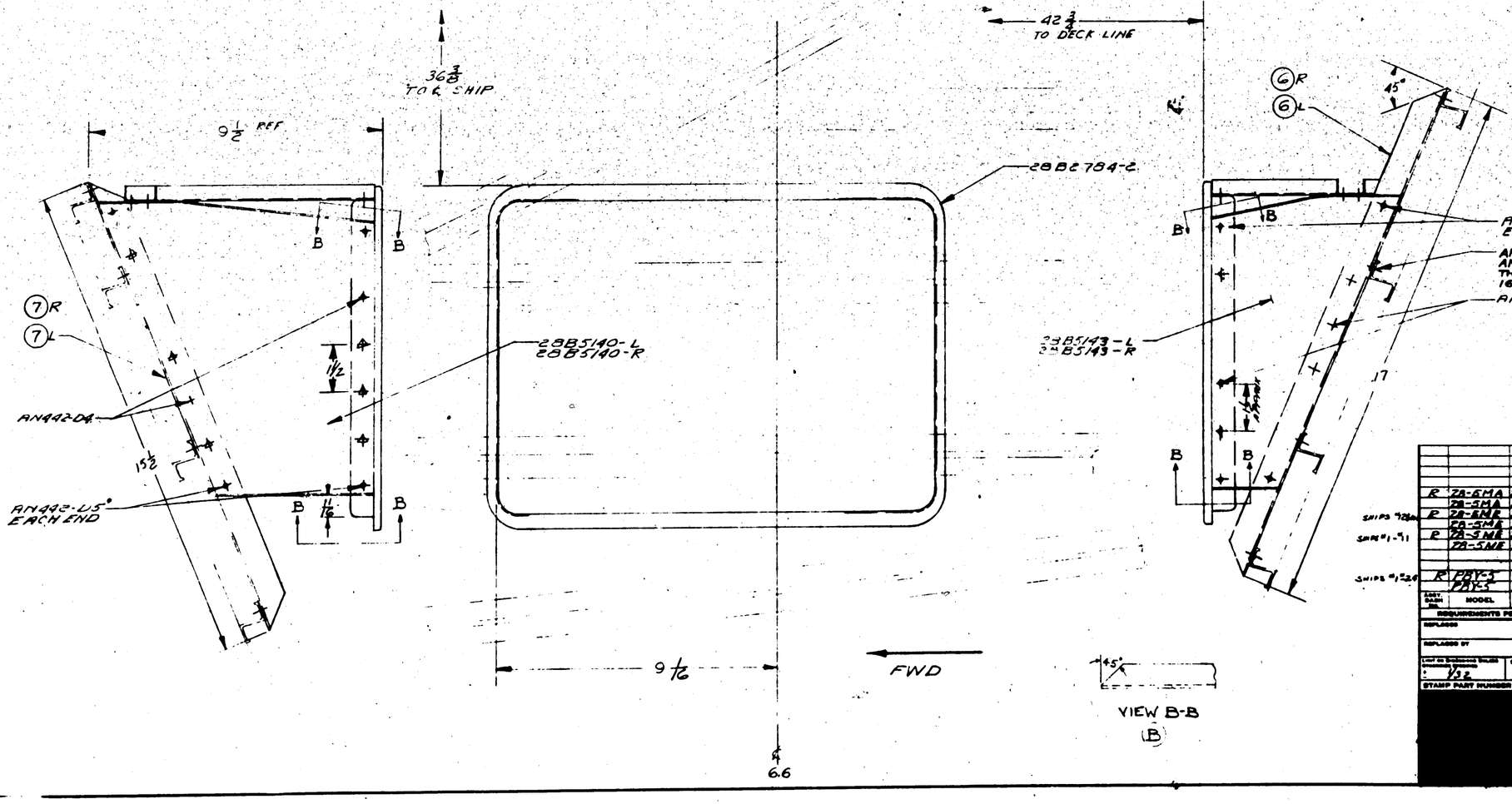

	PART No.	STOCK	MATERIAL	SPEC.	LH REQ.	RH REQ.	LH REQ.	RH REQ.	LH REQ.	RH REQ.
					PARTS LIST PER ASSY.		-0		-3	-4
	7R	NOTED	NOTED	NOTED		1				
	7L	NOTED	NOTED	NOTED	1					
	6R	NOTED	NOTED	NOTED		1				
	6L	NOTED	NOTED	NOTED	1					
R	7A-5MA	28B5180								
	7A-5MA	28B5180								
P	7A-5MR	28B5100								
	7A-5ME	28B8100								
P	7A-5ME	28B2100								
	7A-5ME	28B2100								
R	PAY-5	28B2100								
	PAY-5	28B5180								

AN442-AD5
AN442-AD4

AN526-DD1032-7
AN365-D1032

SHIPS "28M"
SHIPS "28E"

A.C.										
HEAT TREAT	NONE	NOTED								

NAME INSTALL-HULL-STEP ENTRANCE-WAIST-GUN

CONSOLIDATED AIRCRAFT CORP. San Diego, Calif.

SIZE G | DWG. NO. 28B5141

28B5141

LET	ALTERATION	DATE	BY

LET	ALTERATION	DATE	BY
A	7 7/32 MAX 7 15/32 CH.	9-27-40	MEW

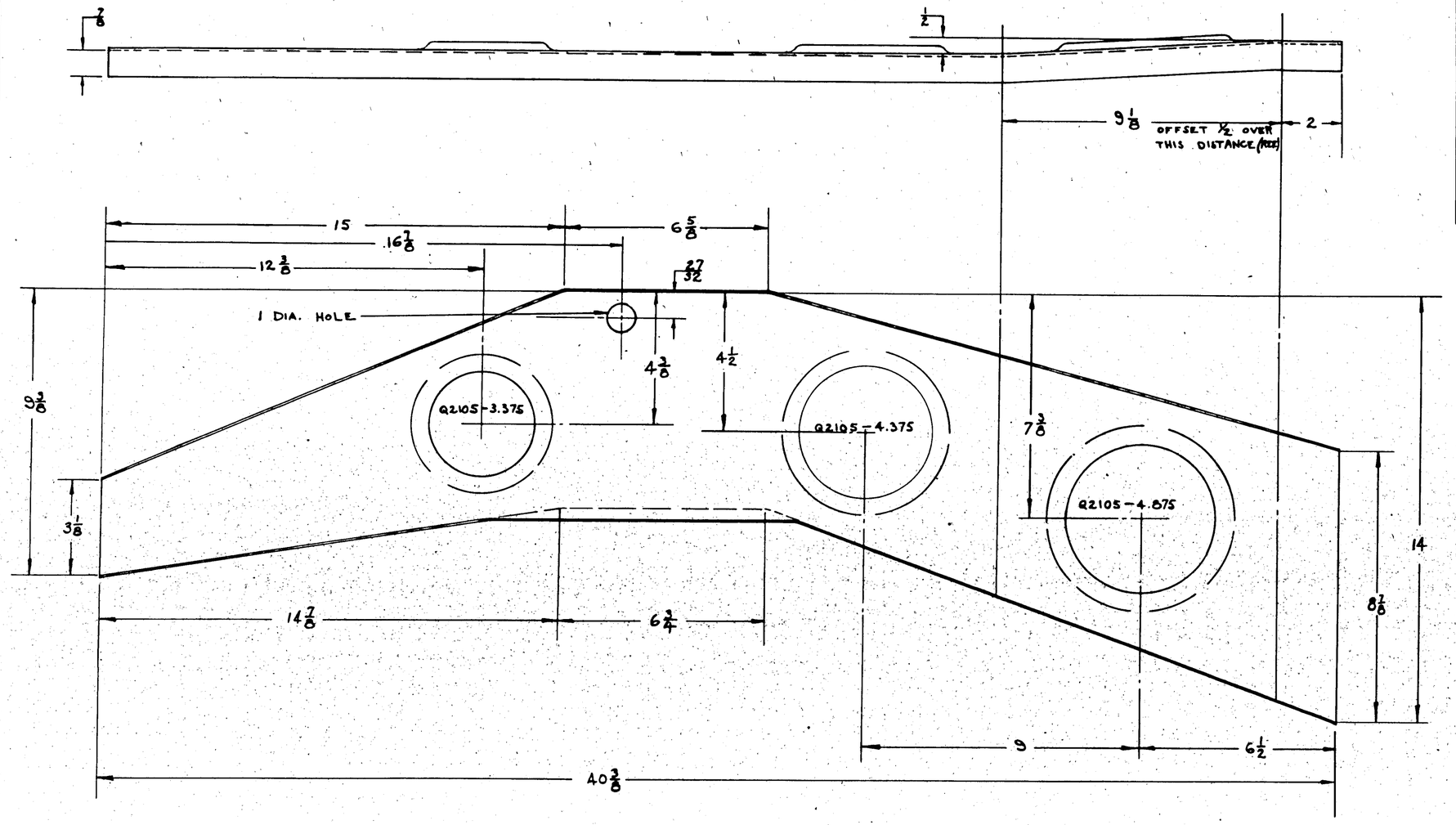

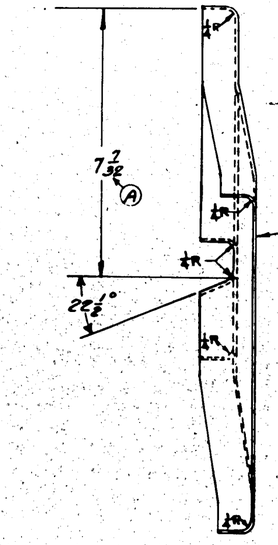

R PBY-5 28B5153-1
L PBY-5 28B5153-1

ASSY DRAWING NO.	MODEL	NEXT ASSY	DRG.

REQUIREMENTS PER AIRPLANE

REPLACES	WT.
REPLACED BY	ASS. WT.
LIMIT NO. ENGINEERING ORDERS OR DRAWINGS: 1 thru 12	SCALE 6"=1'-0

STAMP PART NUMBER WHERE SHOWN

PART NO	STOCK	MATERIAL	SPEC.	LH REQ.	RH REQ.	LH REQ.	RH REQ.	LH REQ.	RH REQ.	LH REQ.	RH REQ.
PARTS LIST PER ASSY.				-0	-2	-3	-4	-5	-7		

.040x2.0x44 ALC. 24ST 47A8 CLAD

A.C.		WHEEL					
NAVY SR-55 Cond T	2-P	9/15/40		9/30/40			R
HEAT TREAT	FINISH	DRAFT	CHECK	STRUCT	MAT	PROJECT	ENG.

NAME BRACE - HULL - OBSERVERS SEAT WELL - INB'D.

CONSOLIDATED AIRCRAFT CORP. San Diego, Calif.

OPP. HAND 28B5154-R

DWG. G SIZE 28B5154

LET	ALTERATION	DATE	BY	LET	ALTERATION	DATE	BY
				A	G. Mtls & Stand.		

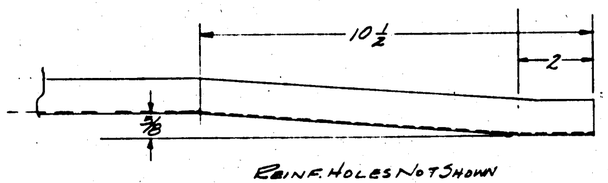

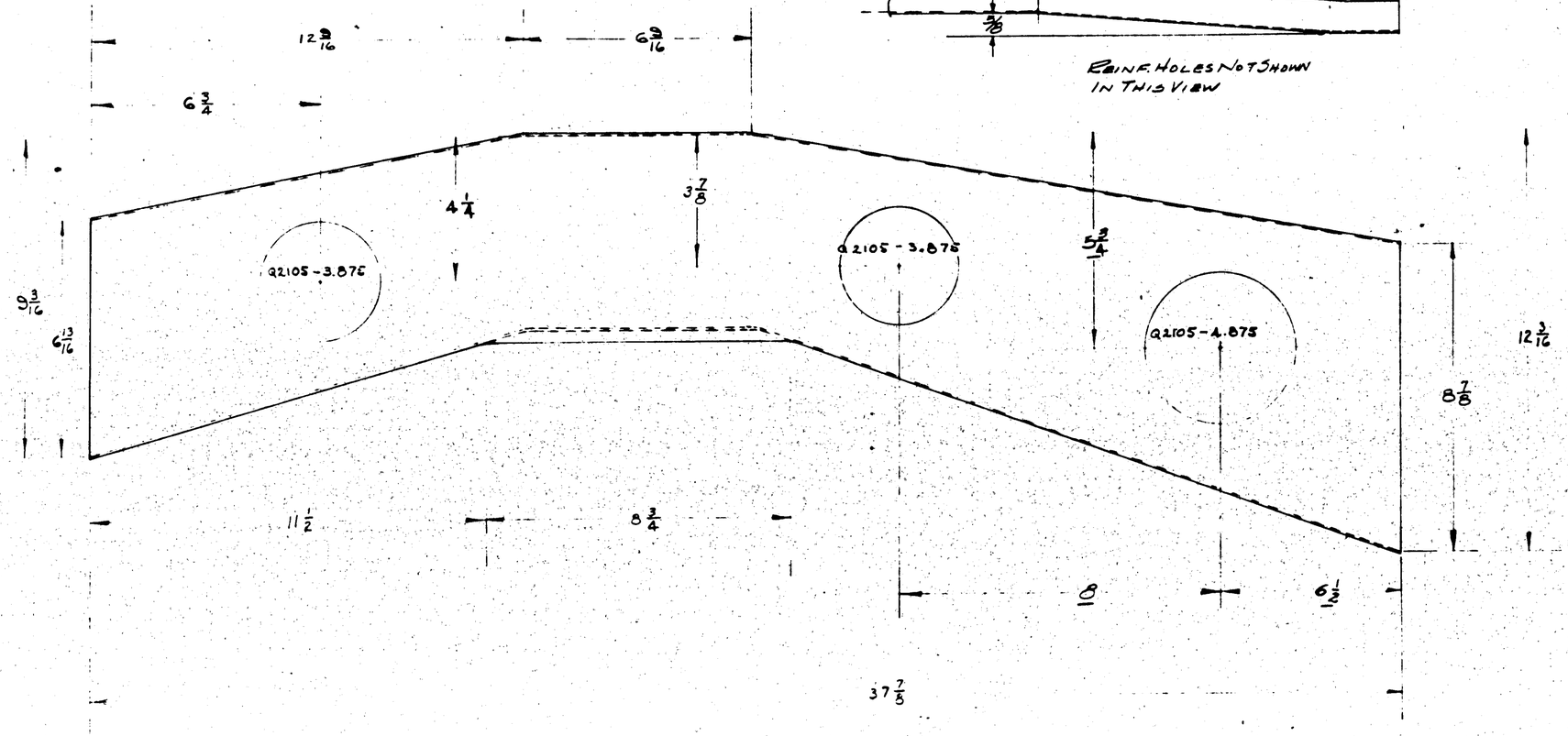

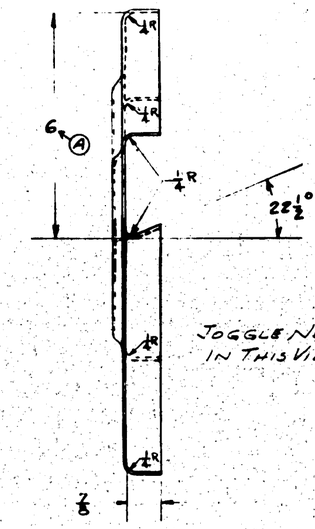

JOGGLE NOT SHOWN IN THIS VIEW.

ASSY. SALES NO.	MODEL	NEXT ASSY	NO.
PBY-6 PBY-5			

REQUIREMENTS PER AIRPLANE

REPLACES	A.N.C. SPEC. NO.
REPLACED BY	ANC. NO.

LIMIT ON DIMENSIONS UNLESS OTHERWISE SPECIFIED: ± .xx ± .xxx

SCALE 6" = 1'-0

STAMP PART NUMBER WHERE SHOWN

PART No.	STOCK	MATERIAL	SPEC.	LH REQ.	RH REQ.	LH REQ.	RH REQ.	LH REQ.	RH REQ.	LH REQ.	RH REQ.
	.040 X 18 X 42	Alc. 61S	47A8 CLAD								
PARTS LIST PER ASSY.				-0	-2	-3	-4	-57			

A C							
NAVY SR-53 CHEV. 7	Z-P	10/40			6/18/40	6/18/40	K
HEAT TREAT	FINISH	DRAFT	CHECK	STRUCT	DATE	APPROV	ENG.

NAME BRACE - HULL OBSERVERS SEAT WELL - OUTB'D.

OPP. HAND 28B5155-R

CONSOLIDATED AIRCRAFT CORP. San Diego, Calif.

DWG. G

28B5155

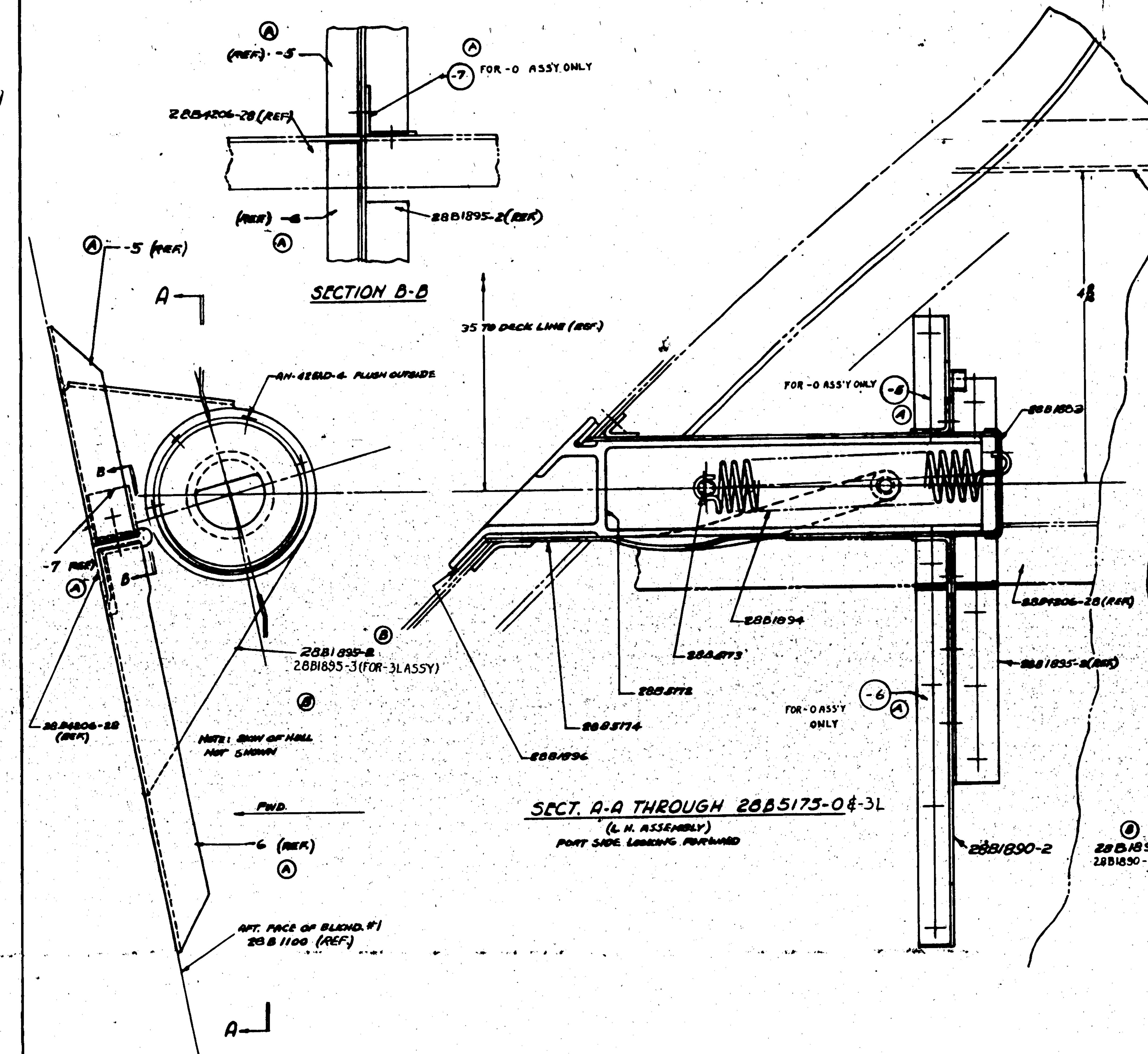

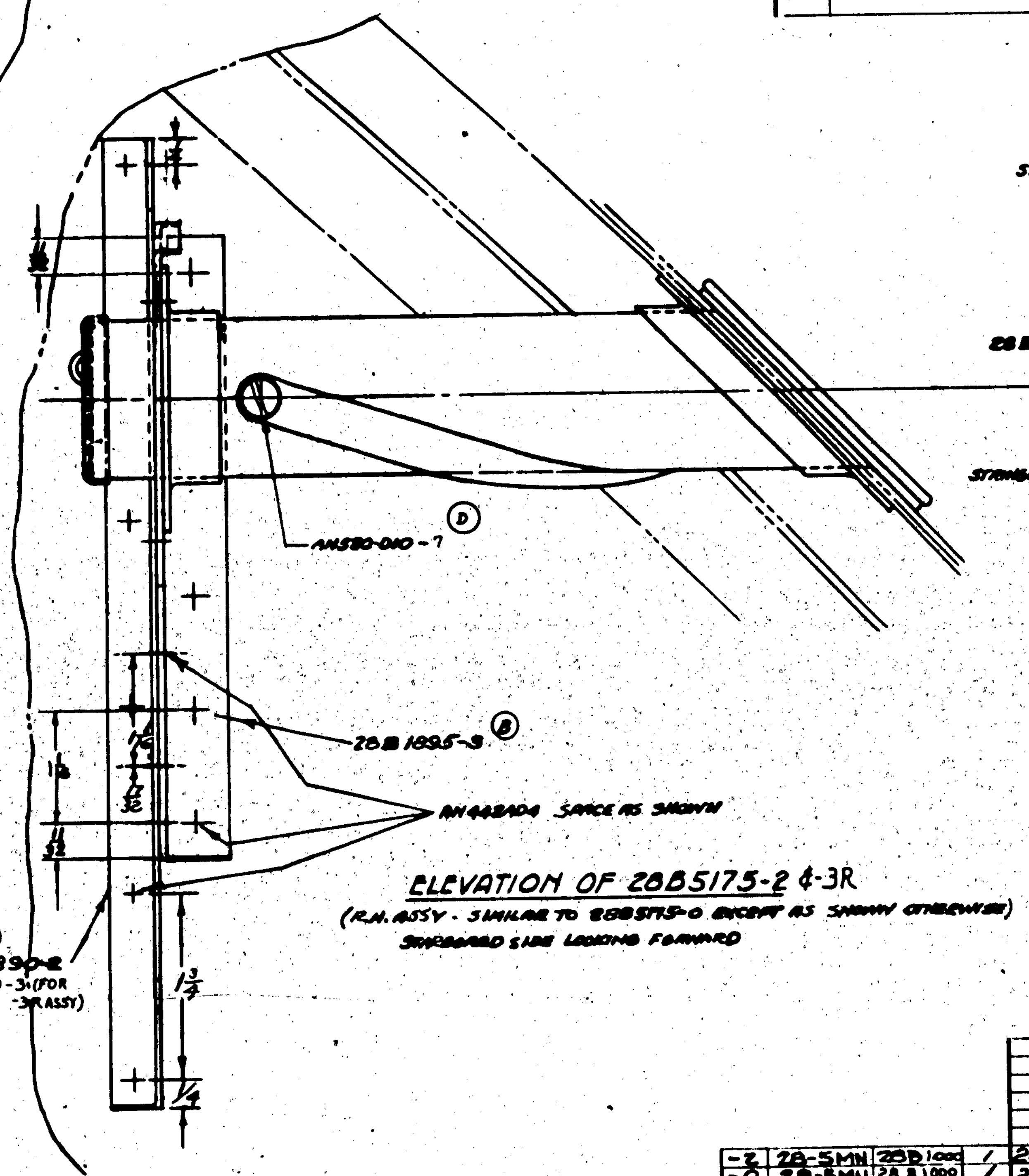

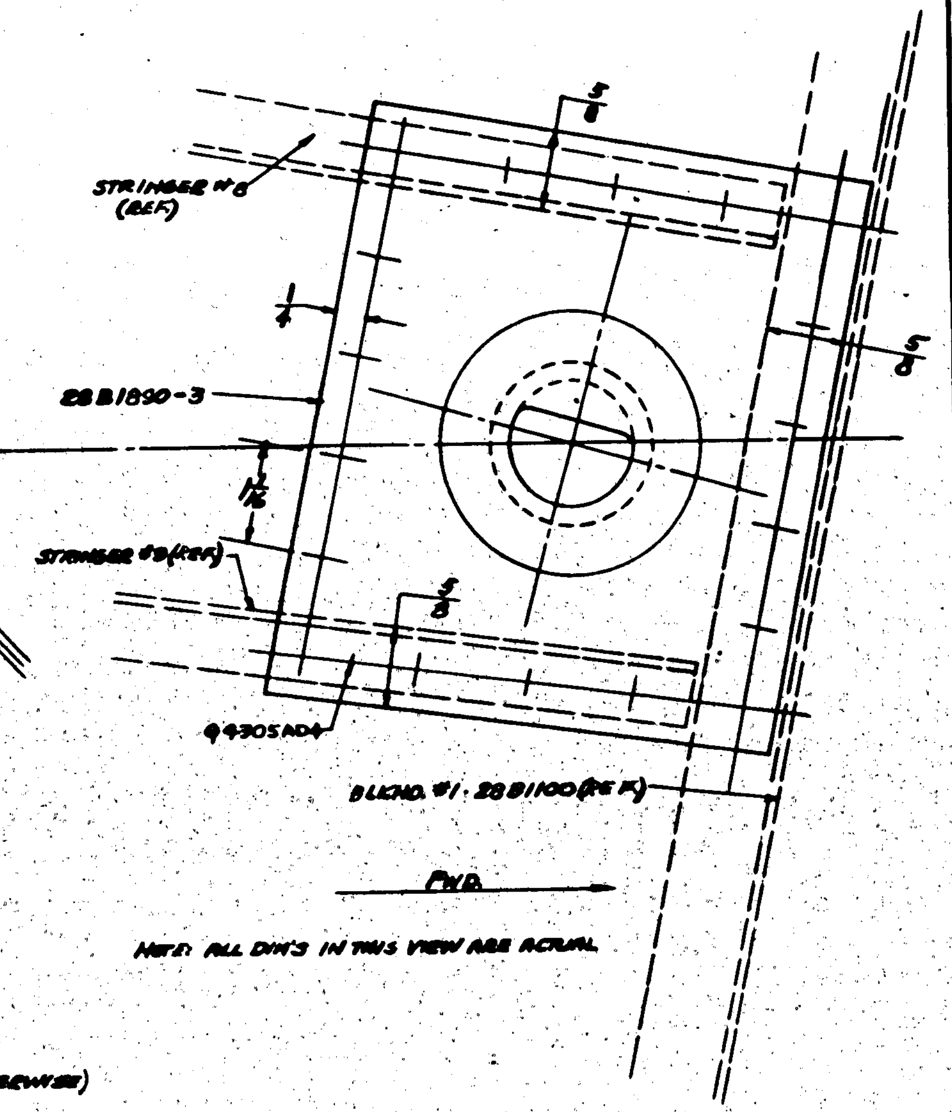

LET	ALTERATION	DATE	BY
A	28B5175-5-6-7 WAS [illegible] -5-6-7 ON PAGE [illegible]	[illegible]	DICK
B	REPLACED 28B1895 [illegible] WITH 28B1895-2(1) FOR -0 ASSY & 28B1895-3(1) FOR -3 ASS'Y & REMOVED NOTE "CUTOUT ---- [illegible]" CHANGED VIEW OF ELV. 28B5175-2 TO AGREE WITH 28B1890-1.	[illegible]	[illegible]
C	M/M: 28B5175-7 MAT'L K5401 × 3/4 WAS K9876 × 3/4, WT. CHG. NEG.	4-15-42	[illegible]
D	AN520-D10-7 WAS AN520-D10-8	4-17-42	[illegible]
E	CREATED -3 ASSY. NO WT CHG.	7-24-42	Brin

ASSY DASH NO.	MODEL	NEXT ASSY	REQ.
-2	28-5MN	28B1000	1
-0	28-5MN	28B1000	1
-3R	PBY-5	28B6000	1
-3L	PBY-5	28B6000	1
-3R	PBY-5A	28B6000	1
-3L	PBY-5A	28B6000	1
-2	28-5AMN	28B5500	1
-2	28-5AMC	28B5500	1
-2	PBY-5A	28B5500	1 EA
-2	28-5MC	28B1000	1
-0	28-5AMN	28B5500	1
-0	28-5AMC	28B5500	1
-0	PBY-5A	28B5500	1 EA
-0	28-5MC	28B1000	1

C-91876 (-3R, -3L PBY-5); C-77713 & 88476 (-2); C-77713 & 88476 (-0)

REQUIREMENTS PER AIRPLANE

REPLACES — CALC. WT.

REPLACED BY — ACT. WT.

LIMIT ON DIMENSIONS UNLESS OTHERWISE SPECIFIED ± 1/32 — SCALE 12" = 1'-0"

STAMP PART NUMBER WHERE SHOWN

PART No	STOCK	MATERIAL	SPEC.
28B1895-3			
28B1895-2			
94305AD4			
AN520D10-7			
AN442AD4			
AN426AD4			
28B1890-3			
28B1890-2			
28B5174			
28B5173			
28B5172			
28B1896			
28B1894			
28B1893			
28B5175-7	K5401 × 3/4	AL. ALLOY	46A9T
28B5175-6	K3996 × 6 1/8	AL. ALLOY	46A9A
28B5175-5	K3996 × 9 7/8	AL. ALLOY	46A9T

LH RH REQ. -0 | LH RH REQ. -2 | LH RH REQ. -3 | LH RH REQ. -4 | LH RH REQ. -5

PARTS LIST PER ASSY.

A C			
NAVY None	Noted	11-6-40	
HEAT TREAT	FINISH	DRAFT	CHECK · STRUCT. · MAT. · APPROV. · ENG.

NAME: STEP INST. - HULL BOW RETRACTING

OPP. HAND 28B5175-2

CONSOLIDATED AIRCRAFT CORP. SAN DIEGO, CALIF.

G 28B5175

R

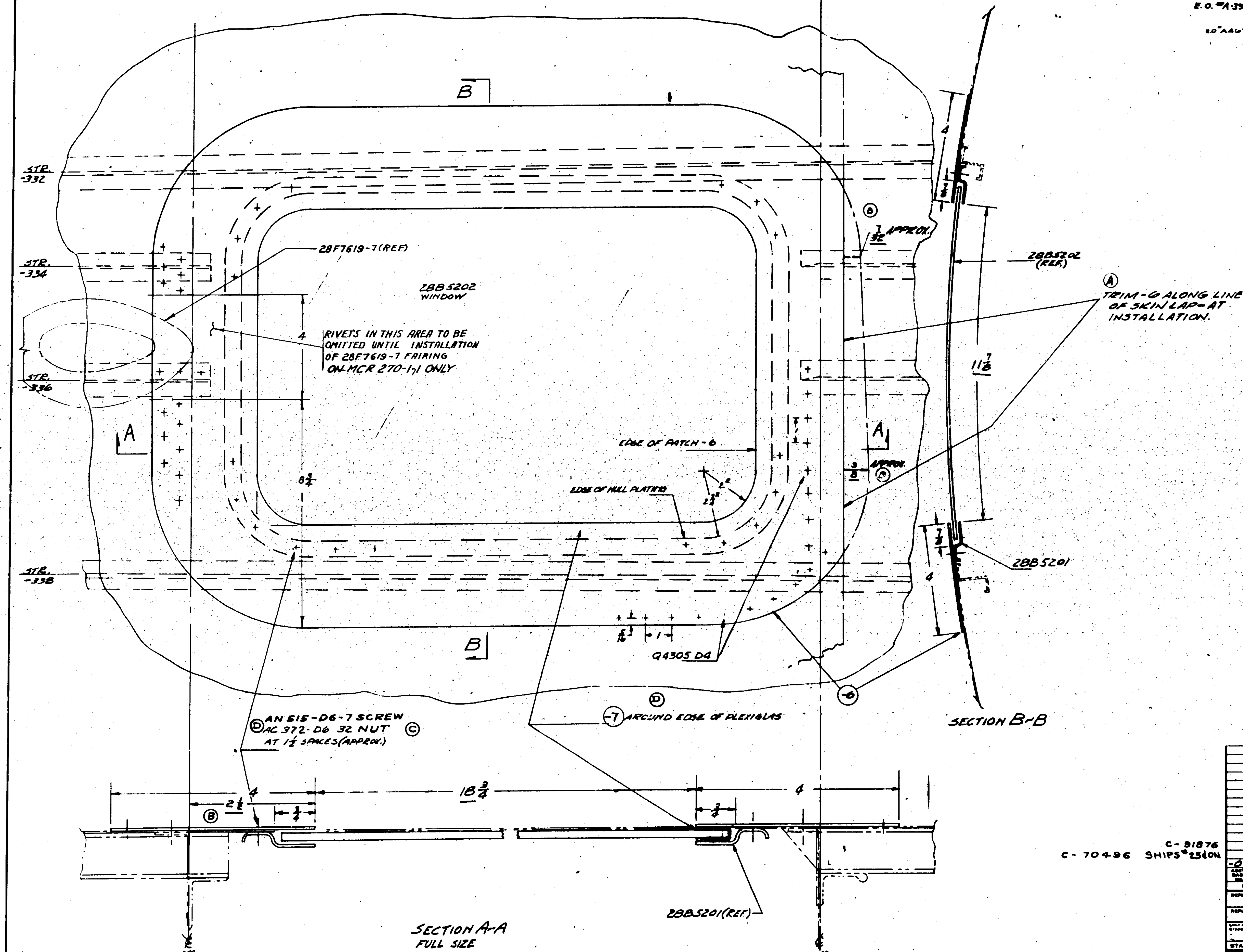

E.O.	LET	ALTERATION	DATE	BY	LET	ALTERATION	DATE	BY
E.O. 28134	A	DETAIL-6 TRIMMED	2-14-41	JAD				
E.O. #A-37508	B	DIM. 2 1/2 WAS 2 5/8, 7/32 APPROX. WAS 1/32 APPROX. & 3/8 APPROX. WAS 1/2 APPROX.	4-25-42	KESTER				
E.O. #A-39320	C	AN 515-D6-6(42) WAS AN 505-D6-6(40), & AC 365-D6-32(42) WAS (40)	4-25-42	KESTER				
E.O. #A46704 9	D	ON FACE OF DWG ... AN515-D6-7 WAS AN515-D6-6; AC372-D6-32 WAS AC365-D6-32 ADDED -7 EVERSEAL TAPE ... TO ... -7 ... ETC. WAS ... EVERSEAL ... ETC. WT. CHG. NEG.	6-30-...					
	E	ADDED 28F7619-7 (REF) ADDED DIMS 4 & 8 3/4 LOCATING AREA & NOTE "RIVETS .... OMITTED UNTIL INSTALL. OF .... FAIRING" NO WT CHG	5-28-43	LESSE				

FINISH:
ANODIZE
P27 PRIMER
WATERTIGHT FAYING SURFACES IN ASSY.

C - 91876
C - 70496 SHIPS #2560N

ASSY DASH No.	MODEL	NEXT ASSY.	REQ.
	28-5AMN	28B5500	1
	28-5AMC	28B5500	1
	28-5MN	28B1000	1
	28-5ME	28B1000	1
	28-5MC	28B1000	1
	28-5MA	28B1000	1
	PBY-5B	28B6000	1
	PBY-5A	28B5500	1
	PBY-5	28B6000	1
	PBY-5	28B1000	1
-0	STOCK 3	28B1000	1

REQUIREMENTS PER AIRPLANE

REPLACES — CALC. WT.
REPLACED BY — ACT. WT.
SCALE 1/1 & NOTED
STAMP PART NUMBER WHERE SHOWN

PART No	STOCK	MATERIAL	SPEC.	REQ. -0	REQ. -2	REQ. -3	REQ. -4	REQ. -5
AN515-D6-7				42				
AC372-D6-32				42				
28B5202				1				
28B5201				1				
-7	1/16 x 1 1/2 x 62	EVERSEAL TAPE		1				
-6	.057 x 20 1/2 x 27 1/2	24ST SHEET	47A10-T	1				

PARTS LIST PER ASSY.

AC							
NAVY	ZP-6 WS-ASS'Y.	1-24-41 PRONDT	4/3	G	1/1		R
HEAT TREAT	FINISH	DRAFT	CHECK	STRUCT	MAT	APPROV.	ENG.

NAME INSTAL. - HULL - NAV'S. WINDOW
OPP. HAND
DWG. SIZE G 28B5200
CONSOLIDATED AIRCRAFT CORP. SAN DIEGO, CALIF.

LET	ALTERATION	DATE	BY	LET	ALTERATION	DATE	BY
A	DIM 18 3/16 WAS 18 5/8	6-30-41	HAMMER				

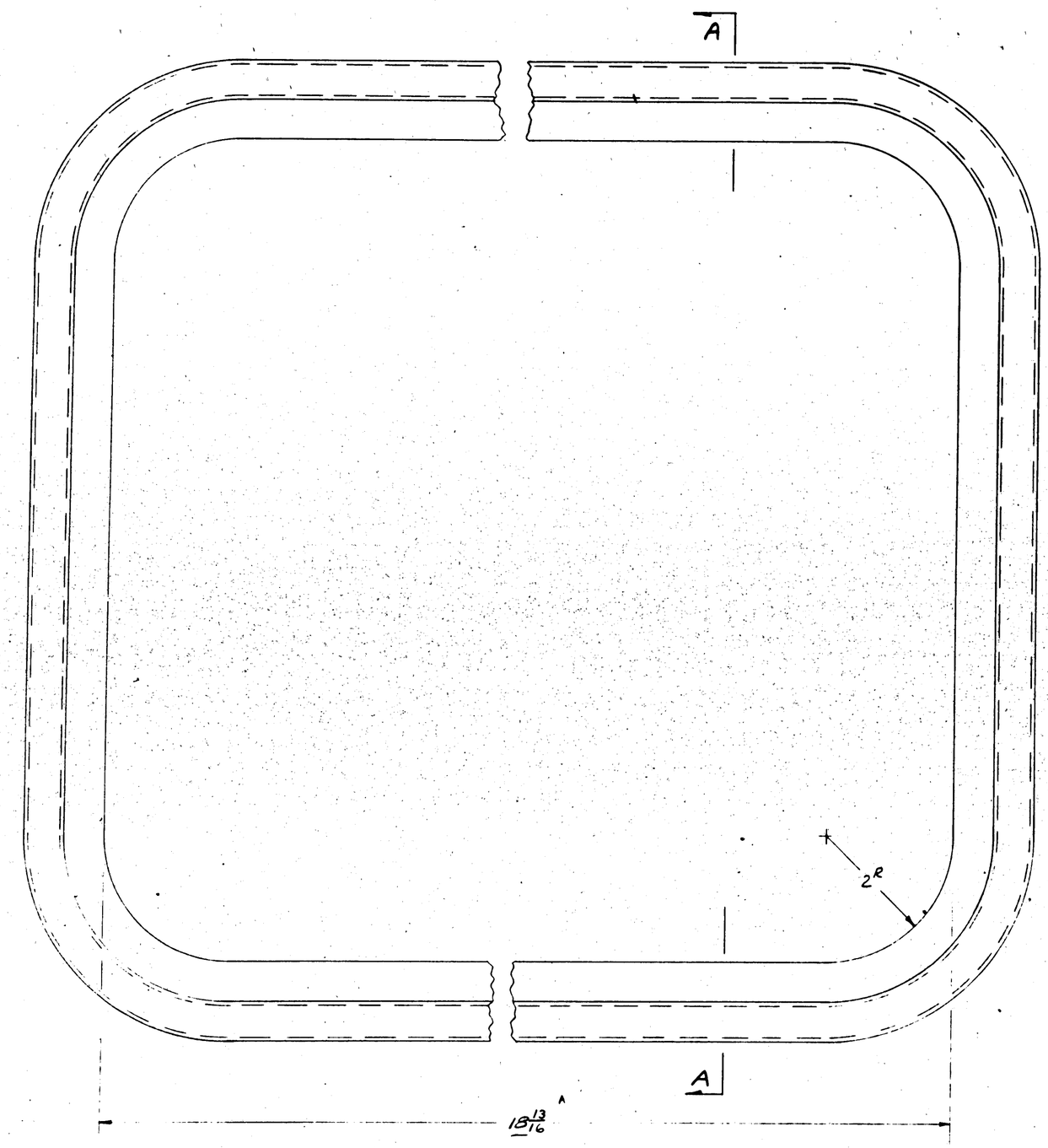

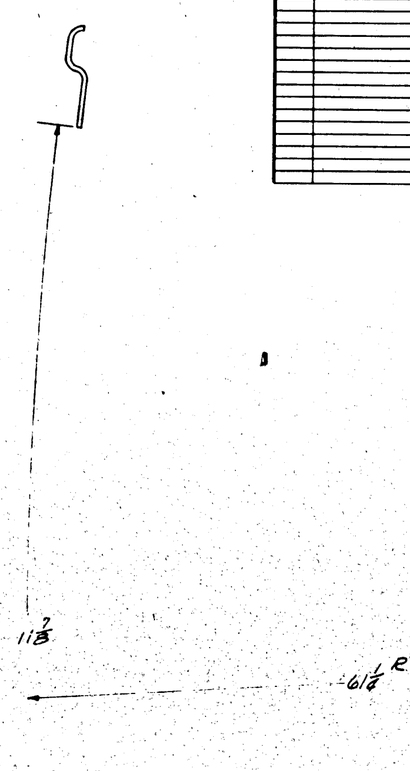

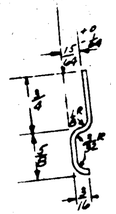

SECTION A-A

PBY-5B	28B5228	1
PBY-5B	28B5100	1
PBY-5A	28B5200	1
PBY-5	28B5300	1
28-5ME	28B5200	1

ASSY DASH NO.	MODEL	NEXT ASSY	REQ.

REQUIREMENTS PER AIRPLANE

REPLACES — CALC WT.

REPLACED BY — ACT. WT.

LIGHT ON BLUEPRINT UNLESS OTHERWISE SHOWN / DARK ON BLUEPRINT UNLESS OTHERWISE SHOWN

SCALE 12" = 1'-0"

STAMP PART NUMBER WHERE SHOWN

CODE	
Z	ANODIC TREATMENT
P	P-27 PRIMER
AP	ALUMINIZED PRIMER
C	CADMIUM PLATE

PART No	STOCK	MATERIAL	SPEC.	LH REQ. -0	RH REQ. -2	LH REQ. -3	RH REQ. -4	LH REQ. -5	RH REQ.
28B5226-19	2250 ROUND	61ST-A							

PARTS LIST PER ASSY.

NAVY SR-53	ZP	1-29-42 LLS					
HEAT TREAT	FINISH	DRAFT	CHECK	STRUCT	MAT	APPROV	ENG

NAME FRAME-HULL-WINDOW

CONSOLIDATED AIRCRAFT CORP. SAN DIEGO, CALIF.

OPP HAND

DWG. G SIZE 28B-5201

R

LET.	ALTERATION
A	ADDED 5/8 DIM. LOCATING LIP OF REFLECTOR FROM TOP SURFACE.

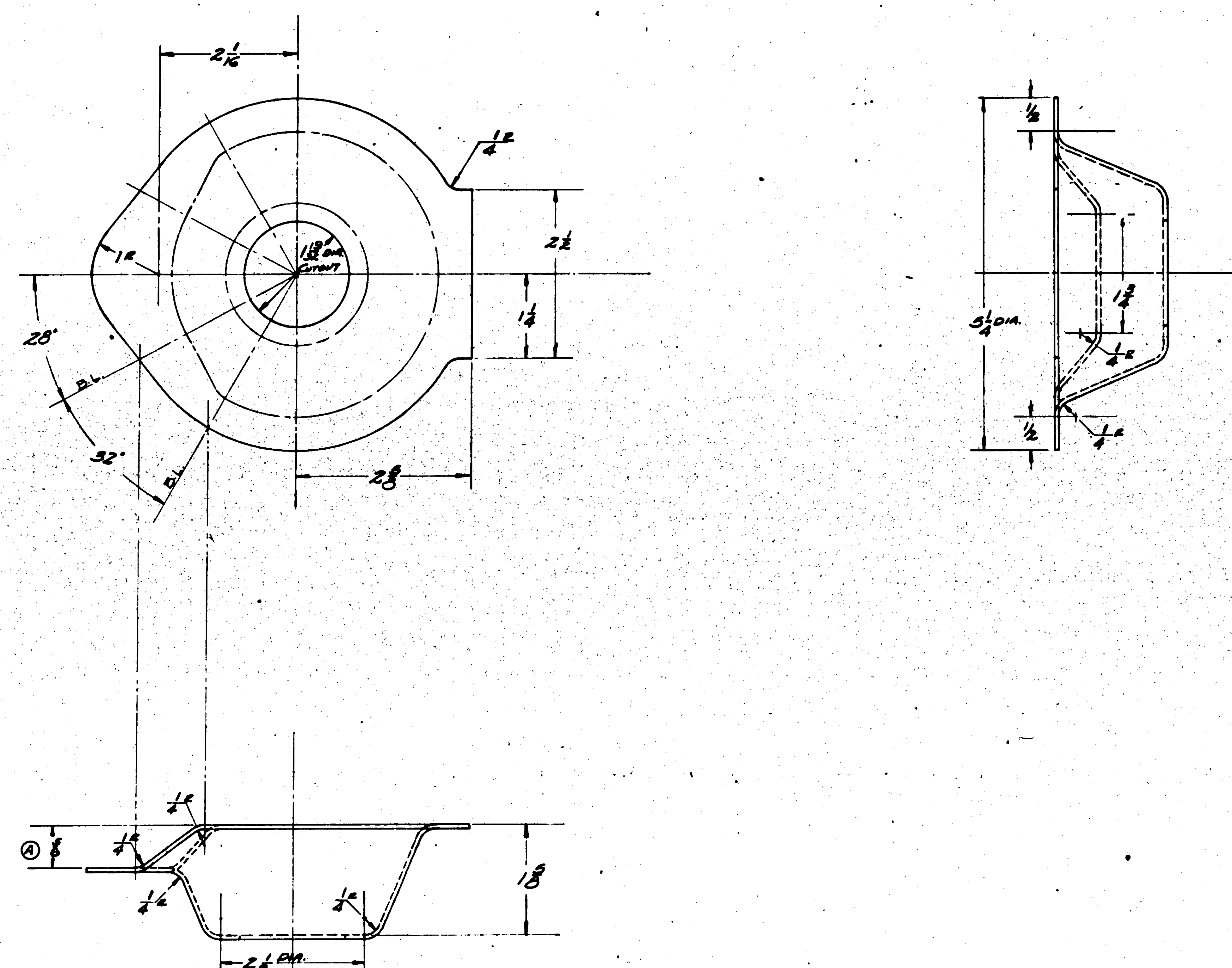

FINISH

Z	ANODIC TREAT.M.
P	P-27 PRIMER
AP	ALUMINIZED PRIMER
C	CADMIUM PLATE

MODEL	NEXT ASSY.
PBY-5A	28B5[illegible]
PBY-5	[illegible]
PBY-5	[illegible]

PARTS LIST FOR ASSY.

FINISH: Z-P-ZAP

REFLECTOR-HULL-SALVO SIGNAL LIGHT

AIRCRAFT CORP.

28B5206

LET	ALTERATION	DATE	BY	LET	ALTERATION	DATE	BY
A	ADDED CURVE AT CONTOUR & SEC	10-3-42	R.P.				
B	CHANGED DIMENSIONS: 4 1/16 TO 4 3/16; 5 1/16 TO 5 3/16; 1 7/16 TO 1 3/16; 3 1/16 TO 3 1/64; 5 1/16 TO 5 3/16; 3 1/16 TO 3 1/64; 4 1/16 TO 4 3/16, WT. CHG. 1/64.	7-31-43	[illegible]				

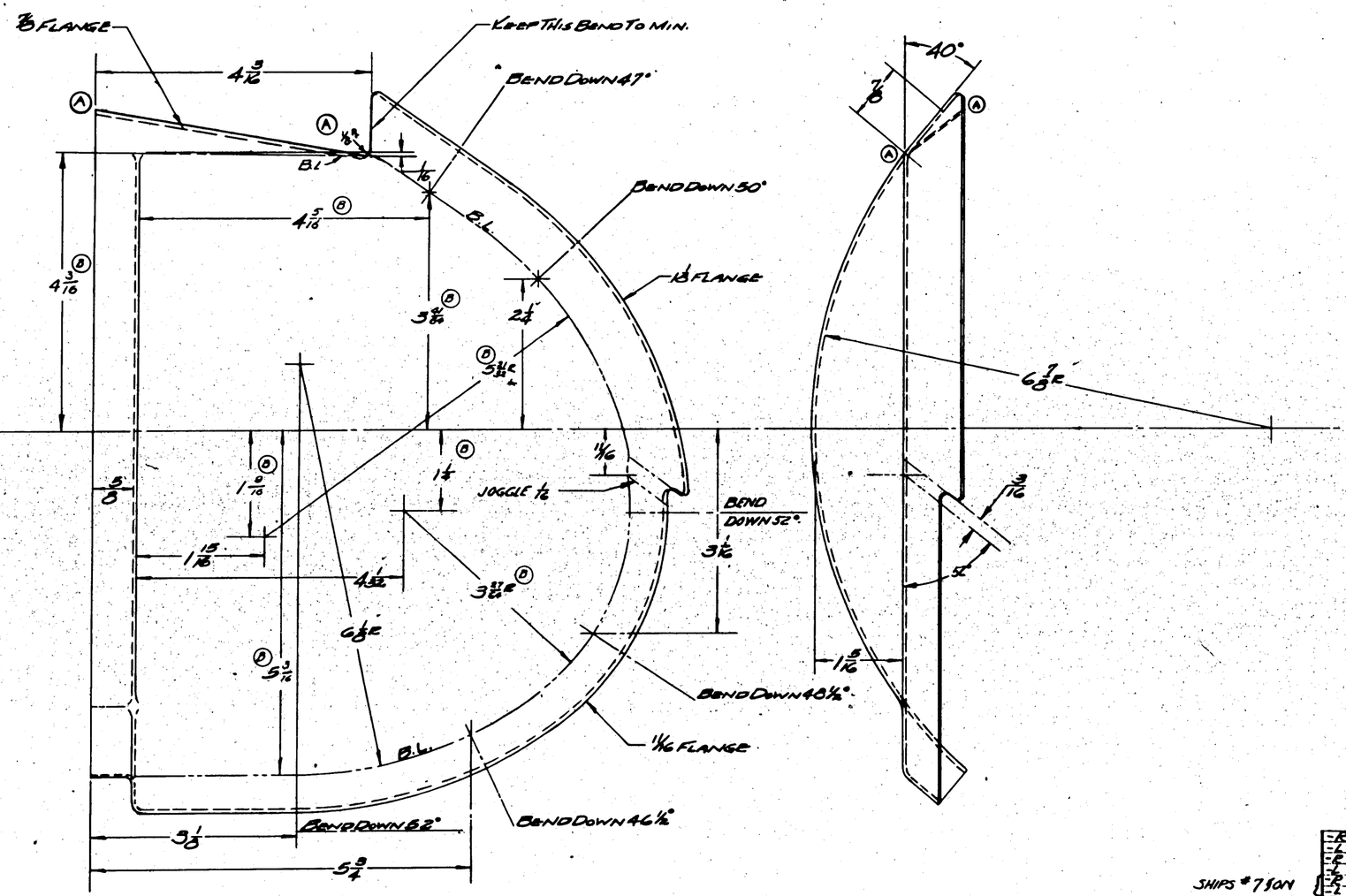

LEFT HAND SHOWN
RIGHT HAND OPPOSITE

FINISH CODE

Z	ANODIC TREATMENT
P	P-27 PRIMER
AP	ALUMINIZED PRIMER
C	CADMIUM PLATE

-R	2035NC	2031755		
-L	2035NC	2031755		
-R	2035AN	2031755		
-L	2035AN	2031755		
-R	2035NN	2031755		
-L	2035NN	2031755		
-R	2035NA	2031755		
-L	2035NA	2031755		
-R	2035NE	2031755		
-L	2035NE	2031755		
-R	2035AN	2031755		
-L	2035AN	2031755		
-R	2035ANC	2031755		
-L	2035ANC	2031755		
-R	PBY-5A	2031755		SHIPS #7 ON
-L	PBY-5A	2031755		SHIPS #55 ON
-R	PBY-5	2031755		
-L	PBY-5	2031755		SHIPS #125 ON
ASSY. DWG. NO.	MODEL	NEXT ASSY	DES.	

REQUIREMENTS PER AIRPLANE

REPLACED BY	QUAD. QTY.	ASY. QTY.
2031755	40	

LOCATION DIMENSIONS FROM	DRAWN
1/32 3°	1/2"=1'-0"

STAMP PART NUMBER WHERE SHOWN

2 0 3 1 x 1 6 x 1 6 ALCLAD SHT. & PLATE

PART NO	STOCK	MATERIAL	SPEC.	LH REQ. -0	RH REQ. -2	LH REQ. -3	RH REQ. -4	LH REQ. -5	RH REQ. -6
PARTS LIST PER ASSY.									

A C NAVY 2S35 ANQY	2 P AP
HEAT TREAT	FINISH

DRAFT [illegible] CHECK [illegible] STRUCT [illegible] MAT [illegible] APPROV [illegible] DES [illegible]

NAME SUPPORT-HULL-Nose Bumper

OPP. HAND 28B5211-R

CONSOLIDATED AIRCRAFT CORP. SAN DIEGO, CALIF.

DWG. G

28B5211

DES R

LET	ALTERATION	ATH	INT
S	PHOTO TRACED	6-28-41	
T	7/8 R WAS 5/16 NO WT CHG	7-14-41	
U	IN SECT. AA NOTE 2 3/16 DRILL--- DEEP WAS 1 1/8 DRILL--- DEEP NO WT. CHG.	8-13-41	G.B.M.

SUPPLIES & EQUIPMENT CLASSIFICATION

Z DETAIL

WELD

ONLY FORGINGS REC'D. WITH INSUFFICIENT WEB THICKNESS ARE TO BE REWORKED AS SHOWN - MILL 2 3/8 BY 1 1/8 OPENING - INSERT .188 C.R. STK. & WELD - FINISH AS SHOWN

SECTION C-C

FLANGE THICKNESS ON THESE FACES NOT TO BE LESS THAN 1/16 + ABSOLUTE MIN.

LOCATE FINISHED HOLE IN CENTER OF BOSSES

JIG .375 +.002 -.000 DIA. REAM - 8 HOLES TO MATCH HOLES IN 28B5342 (REF)

3/8 R MACH. (T)

JIG LOCATE AND DRILL 11/64 DIA. 2 HOLES SPOTFACE OTHER SIDE 3/8

SAME DIMS AS Q700-36-24 EXCEPT 1.127 +.0005 -.001 I.D.
MAKE FROM SUPER MANGANESE BRONZE - CAM SPEC LUMEN #20 OR EQUIVALENT.
H.T. 165-120,000 PSI AS REQ'D.
PRESS IN WITH WET PRIMER AFTER H.T. OF FITTING.
NO PLATING ON I.D. OF BUSHING, -6 (REF)

WELL

JIG DRILL 13/64 DIA. - SPOTFACE AFT SIDE 9/16 DIA. - 6 HOLES

3/8 DRILL - JIG LOCATE & DRILL 20 HOLES (10 ON THIS PROF. + 10 ON OPPOSITE PROF. OF 28B5213-R - SAME DIMENSIONS.)

1 7/8 - 18 NEF-3 THD.

TAP DRILL DIA. (1.3714 +.0075 -.0000 REF)

LINE REAM 1.250 +.000 -.001 DIA.

3/8 DRILL THRU BUSHING
TAP DRILL 2 DEEP
1/8 STD. PIPE TAP 3/16 DEEP (U)

WELD BOTH SIDES ALL AROUND

JIG DRILL 9/32 DIA. - 4 HOLES SPOTFACE 7/16 DIA IN WELL
THESE HOLES MUST MATCH HOLES OF UNLATCHING JACK PESCO #523 (REF.)

SECT. A-A

THIS DRAWING HAS BEEN RUSH RELEASED AS OF CHANGE K (6-22-41)

NOTE:
-11 L & R. ROUGH MACHINED FORGING - MAKE FROM 28B5213-L-R ROUGH FORGING. ROUGH MACHINING CONSISTS OF 1" PRE-DRILLED HOLES THRU CENTER OF BOSS.
-10 SUB-ASSY IS WELDED AND FINISH MACHINED ASSY.

FINISH: CAD. PLATE P27 PRIMER

EITHER -0 OR -2 MAY BE USED ON ANY OR ALL MODELS

NOTE:
BREAK ALL SHARP EDGES

-11 MAKE FROM 28B5213-R FORGING
-11L MAKE FROM 28B5213-L FORGING
-10 SUB ASSY

-10 SUB ASSY
1 (28GX28 X (1/4 SH. CM. STEEL 67-214

PART NO.	STOCK	MATERIAL	SPEC.	NOTES	B REQ.	B LH	B RH	C REQ.	C LH	C RH
PARTS LIST PER ASSY					-0	-2	-5	-4	-5	

C-P & NOTED

NAME FITTING ASSEM.-HULL-NOSE LANDING GEAR-DRAG

CONSOLIDATED AIRCRAFT CORP. San Diego, Calif.

DWG. NO. G 28B5212

LET	ALTERATION	DATE	BY
A	REVISED DRWG	10/26/40	T.E.P.
B	WAS 1/16 R. & ADDED NOTE, ADDED DIM.	11/14/40	R.C.S.
C	3/16 WAS 1/8, 1/16 WAS 3/16, 3/16 WAS 1/8, ADDED 1/8 R. E	8-8-41	[illegible]

LET	ALTERATION	DATE	BY

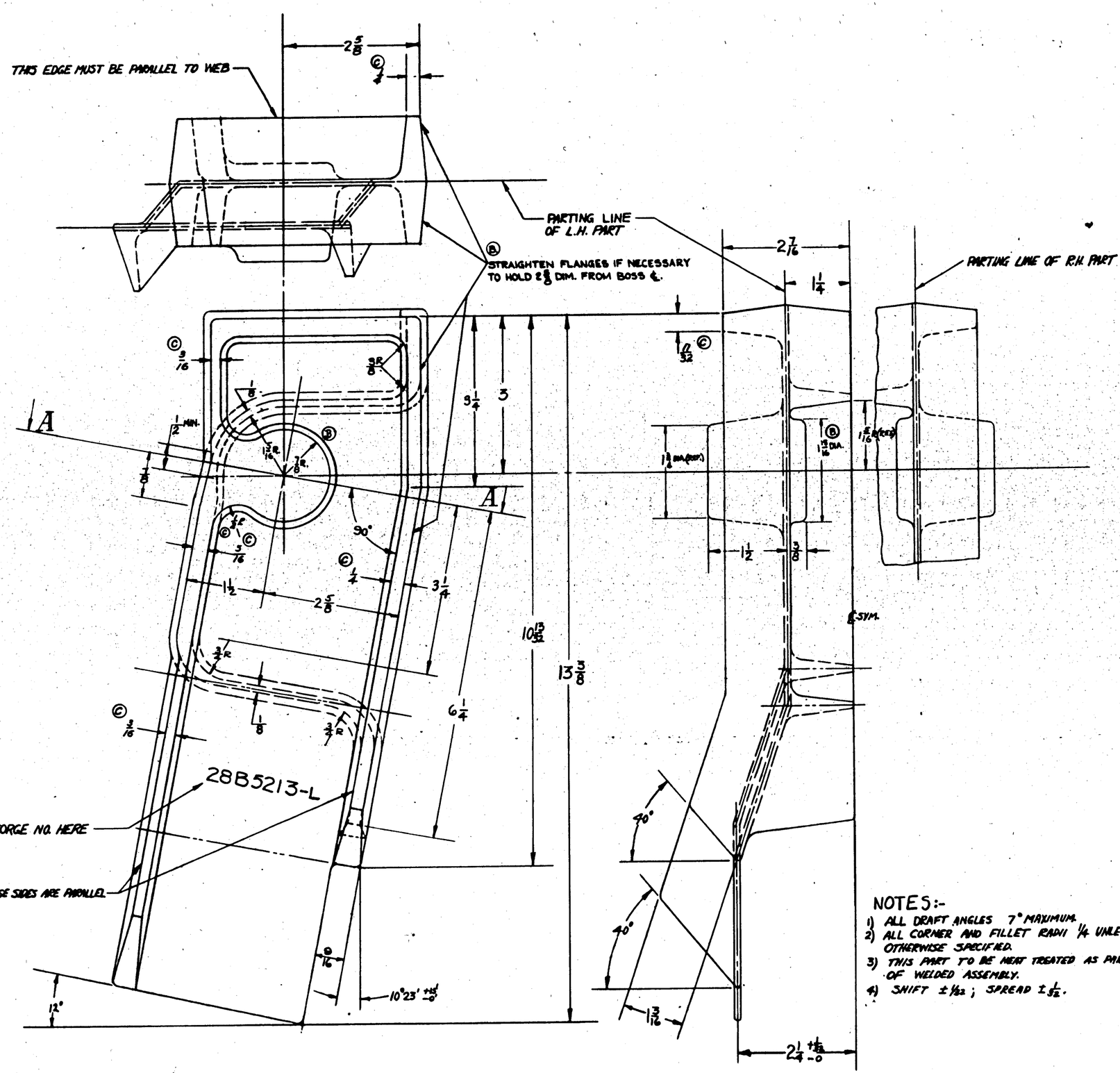

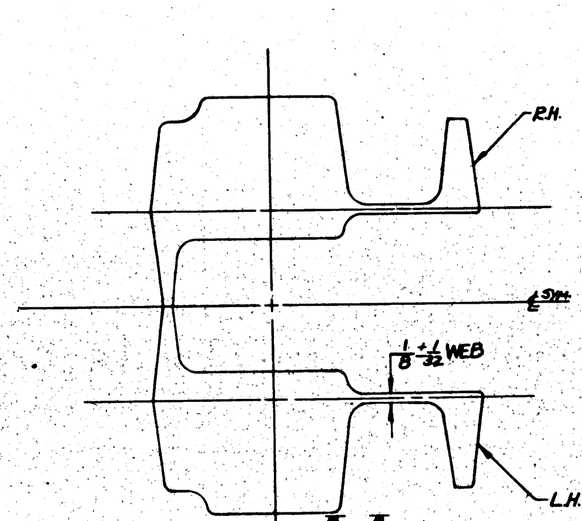

SECT. A-A

NOTES:-
1) ALL DRAFT ANGLES 7° MAXIMUM.
2) ALL CORNER AND FILLET RADII 1/4 UNLESS OTHERWISE SPECIFIED.
3) THIS PART TO BE HEAT TREATED AS PART OF WELDED ASSEMBLY.
4) SHIFT ±1/32; SPREAD ±1/32.

R	28-SAPC	28B5213	1
L	28-SAPC	28B5213	1
R	OAU-1	28B5213	1
L	OAU-1	28B5213	1
R	P2Y-2A	28B5212	1
L	P2Y-2A	28B5212	1

LIST NAME OR NO.	MODEL	NEXT ASSY.	QUAN.

REQUIREMENTS PER AIRPLANE

DISPLACED — DISPLACED BY — CHANGE TO — STAMP PART NUMBER WHERE SHOWN

SCALE 12"=1'-0"

PART NO.	FORGING	WD4136	57-105	1 / 1							
	STOCK	MATERIAL	SPEC.	LH	RH	LH	RH	LH	RH	LH	RH
				REQ.	REQ.	REQ.	REQ.	REQ.	REQ.	REQ.	REQ.
	PARTS LIST PER ASSY.			-0	-2	-3	-4	-5			

A C — NAVY ANNEAL — HEAT TREAT — NONE — PINION

Blue Ag — Red Ag — Black — DRAFT — WELDING — GRINDING — C.S. — H.A.Z. — LIMIT — CHECK — STRAIGHT — SHOT — ANODIZE — ENG.

NAME FITTING-HULL-LANDING GEAR-DRAG

CONSOLIDATED AIRCRAFT CORP. SAN DIEGO, CALIF.

CRP. RANG 28B5213-R

SIZE G — DWG. NO. 28B5213

LET	ALTERATION	DATE	BY
A	134 DIM. WAS 20 7/8 - 21 3/8 DIM. WAS 21		
B	REMOVED 28B5187 FROM 4 PLCS & FACE OF DWG. NOTE ADDED. PEQS/AIRPLANE BROUGHT TO DATE	1-8-45	

LET.	ALTERATION	DATE	BY

ED A6432

Ⓑ NOTE -
ANCHOR NUTS & STANLEY FASTENERS ARE TO BE FINISHED AS PER SPEC. ZF-28-006 " 102.28.
SPEC. ZF-28-006 " 102.28: ANCHOR NUTS (STEEL) & STANLEY FASTENERS. APPLY 1 BRUSH COAT OF ZINC CHROMATE PRIMER TO THE CONTACTING SURFACES OF THE NUT OR FASTENER. APPLY 2 COATS OF PRIMER TO THE SUPPORTING SURFACE. ASSEMBLE WITH ZINC CHROMATE PASTE IN THE JOINT SUCH THAT EXCESS MATERIAL IS SQUEEZED OUT AT ALL BOUNDARIES. REMOVE THE EXCESS MATERIAL IN SUCH A MANNER AS TO FORM A FILLET.

22Q035 STANLEY FASTENER - 5 PLACES
Ⓑ
AN442-D3 DRILL 3/16 DIA. - 5 PLACES

AN442-D4
28B5009
5 (APPROX.)
2 1/8
4 7/16
E E
A A
℄ KEEL
(REF) -7L
-7L
-7L (REF)
AN442 D4 (REF)
B B
6

.040 AL. AL. SHEET SPEC 4; 10 CONDA H.T. -3E53 CONDT NOTE: THIS PART TO BE MADE FROM SAME DIE AS 28B2220-2.

TRIM -7 TO CLEAR STANLEY FASTENERS
(REF) -7L
D D
1 1/2
3/8

AN442 D4 THRU -7 STAGGER BETWEEN CORRUGATIONS AS SHOWN
19 3/32
Ⓑ -8 LOCATE & INSTALL LIKE 28B2220-3.
1/2
2 5/16
1 1/2

21 3/32
Ⓐ
19 1/2
Ⓐ
STA. 6.8

SECT. A-A

FINISH -
Z-P-ZAP - BEFORE ASSEM OF 22Q035

3/16

VIEW B-B
FULL SIZE

22Q035 (REF)
28B5680 (REF)
℄ STA. 6.8

SECT. D-D
FULL SIZE

#1-150

28B5660 (REF)
22Q035 (REF)

SECTION E-E
SCALE 12"=1'-0"

NISH CODE

Z	ANODIC TREATMENT
P	P-27 PRIMER
AP	ALUMINIZED PRIMER
C	CADMIUM PLATE

PART No	STOCK	MATERIAL	SPEC	LH REQ. -0	RH REQ. -2	LH REQ. -3	RH REQ. -4	LH REQ. -5	RH
-8	AN442D4	2024-T	AN-A-9	2					
-7L	AN442D4	2024-T	AN-A-9			1			
-7	.04 X 1 5/16 X 6	2024-T	AN-A-9		1		1		
-6	.040 X 1 5/16 X 6	2024-T	AN-A-9	1					
-5	.040 X 1 5/16 X 6	2024-T	AN-A-9					1	

(SEE NOTE)

PARTS LIST PER ASSY.

ASSY. SUBDIV. No.	MODEL	NEXT ASSY.	REQ.
PBY5A	28B5100	1	28B3009
OAV-1	28A5100	1	
28-5MN	28A5100	1	
28-5MK	28B5100	1	
28-5MK	28B5100	1	
28-5NA	28B5100	1	22Q035
28-5NB	28B5100	1	
PBY5A	28B5100	1	
PBY5	28B5100	1	

AN442-D4
AN442-D3

REQUIREMENTS PER AIRPLANE
REPLACES
REPLACED BY
STAMP PART NUMBER WHERE SHOWN
SCALE 6"=1'-0" PER NOTED
1/32

AC			1-9-44		
NAVY NOTED	NOTED		APPD		
HEAT TREAT	FINISH		DRAFT	CHECK	STRUCT

NAME FLOOR - HULL - WALKWAY 6.60 - 7.00
OPP. HAND
CONSOLIDATED AIRCRAFT CORP. SAN DIEGO, CALIF.
SIZE G
28B5220

LET	ALTERATION	DATE	BY
D	TRACED - NO. WT. CHG.	2-6-43	[illegible]
E	REMOVE DIM 3/16 NO. WT. CHG.	2-8-43	[illegible]
F	ADDED DIM. JOGGLE 3/4 x .064 NO. WT. CHG.	2-8-43	[illegible]

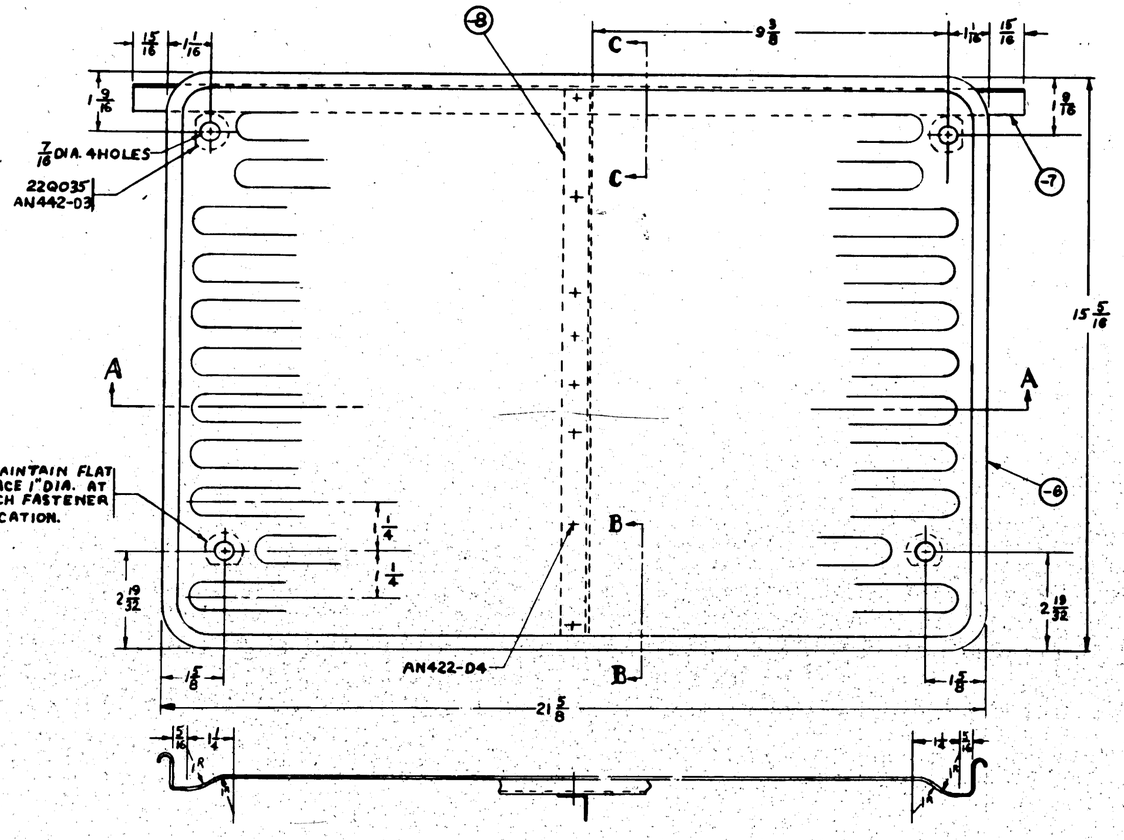

SECTION A A

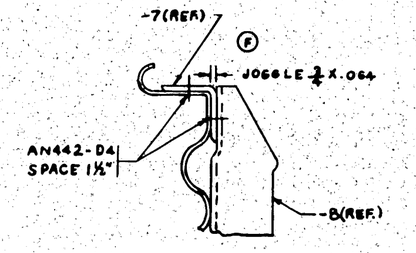

SECTION CC
SCALE 12" = 1'0"

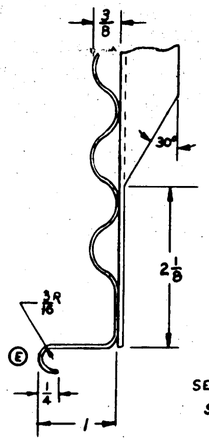

SECTION BB
SCALE 12" = 1'0"

NOTES

1. FINISH Z-P-2GP BEFORE ASS'Y OF 22Q035
2. EXCEPT FOR 21 5/8 LENGTH & LOCATION OF 22Q035 FASTENERS, -6 IS SAME AS 28B2225-2. BOTH HAVE SAME FLANGE SHAPE OF BEADS & WIDTH.
3. ANCHOR NUTS & STANLEY FASTENERS ARE TO BE FINISHED AS PER SPEC. ZF-28-.006* 102.28. SPEC ZF-28-.006* 102.28 ANCHOR NUTS (STEEL) & STANLEY FASTENERS. APPLY 1 BRUSH COAT OF ZINC CHROMATE PRIMER TO THE CONTACTING SURFACES OF THE NUT OR FASTENER. APPLY 2 COATS OF PRIMER TO THE SUPPORTING SURFACE. ASSEMBLE WITH ZINC CHROMATE PASTE IN THE JOINTS SUCH THAT EXCESS MATERIAL IS SQUEEZED OUT AT ALL BOUNDARIES. REMOVE THE EXCESS MATERIAL IN SUCH A MANNER AS TO FORM A FILLET.

FINISH CODE	
Z	ANODIC TREATMENT
P	P-27 PRIMER
GP	GREEN PRIMER
C	CADMIUM PLATE

| | | |

LET	ALTERATION	DATE	BY
	EO 6432		
A	ADDED NOTE "ANCHOR NUTS ETC. REMOVED ROBBET FROM FACE OF DRAWG AND D/M	7-10-41	CROSS
B	REMOVED FROM 3/4 & FACE OF DWG AN 505-D4-7 (10) REPLACED WITH AN505-D4-8 (3) (AN505-D4-10 (1)	7-14-41	HOWARD
C	MOVED [illegible] TO PROJECT 1/8 TO LEFT. (OUTBOARD)	7-28-41	SNOW
D	MOVED 28B2224-2 TO DOUBLER OUTBOARD OF INBOARD EDGE.	12-17-41	SMITH
E	IN B/O, FOR -6, REPLACED "KB4801X13/16, 24ST EXT, 4G49-T" WITH "Y-24-A31T X 13 1/16"; FOR -7, REPLACED "KB401X 13/16, 24ST EXT, 4G49-T" WITH "Y-2-A27ET X 13 5/16"; FOR -8, REPLACED "KB401X13 7/16, 24ST EXT, 4G49-T" WITH "Y-2-A27ET X 13 5/16"; FOR -9, REPLACED "KB401X13 7/16, 24ST EXT, 4G49-T" WITH "Y-2-A27ET X 13 5/16"; FOR -10, REPLACED "KB401 X 12 7/8, 24ST EXT, 4G49-T" WITH "Y-2-		

LET	ALTERATION	DATE	BY
E (cont)	A27ET X 12 7/8"; & FOR -11, REPLACED "X KB401X 11 1/8, 24ST EXT, 4G49-T" WITH "Y-2-A27ET X 11 1/8" (W/X CHG. NO.8)	8-1-42	PLANER

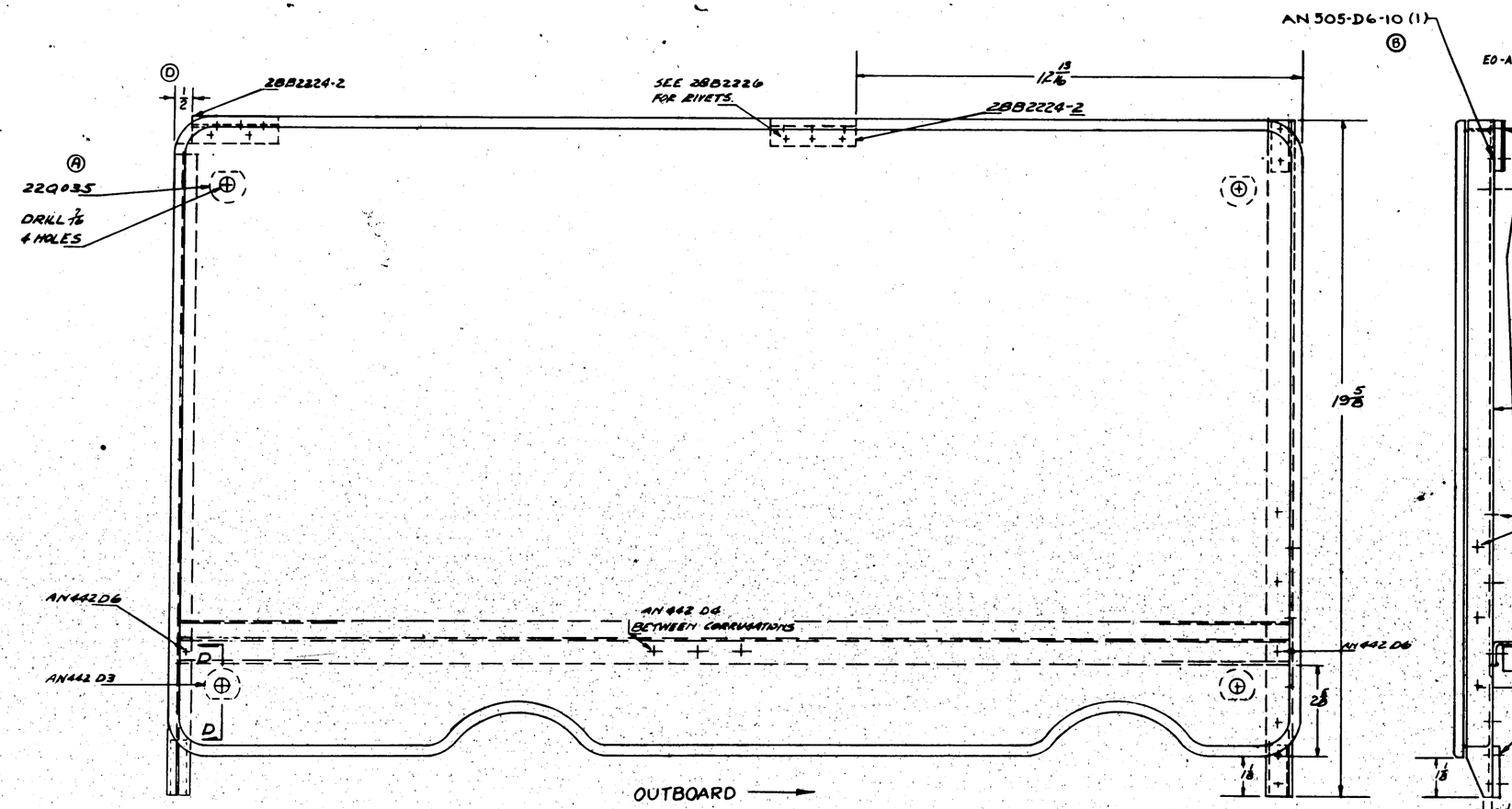

A NOTE:
ANCHOR NUTS & STANLEY FASTENERS ARE TO BE FINISHED AS PER SPEC. #ZF-28-006, #102.28. SPEC ZF-28-006 #102.28: ANCHOR NUTS (STEEL) & STANLEY FASTENERS. APPLY 1 BRUSH COAT OF ZINC CHROMATE PRIMER TO THE CONTACTING SURFACES OF THE NUT OR FASTENER. APPLY 2 COATS OF PRIMER TO THE SUPPORTING SURFACE. ASSEMBLE WITH ZINC CHROMATE PASTE IN THE JOINT SUCH THAT EXCESS MATERIAL IS SQUEEZED OUT AT ALL BOUNDARIES. REMOVE THE EXCESS MATERIAL IN SUCH A MANNER AS TO FORM A FILLET.

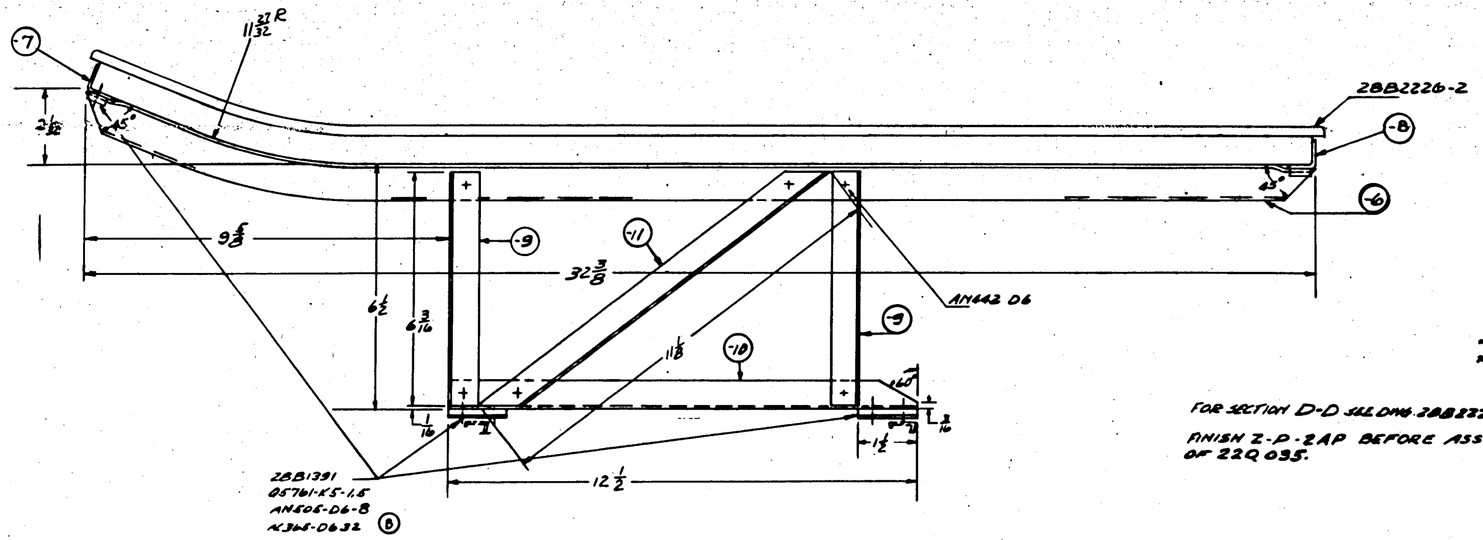

FOR SECTION D-D SEE DWG. 28B2226

FINISH Z-P-2AP BEFORE ASS'Y OF 22Q035.

Z	ANODIC TREATMENT
P	P-27 PRIMER
AP	ALUMINIZED PRIMER
C	CADMIUM PLATE

PART No	STOCK	MATERIAL	SPEC.	-0 REQ.	-2 REQ.	-3 REQ.	-4 REQ.	-5 REQ.
	AN442 D6						10	
	AN442 D4						4	
	AN442 D3						8	
	365-0632						3	
	AN505-D6-10						1	
	AN505-D6-8						8	
	QS761-K5-1.6						3	
28B2224-2							1	
28B2226-2							2	
28B1391							8	
22Q035							4	
-11	Y2-A27ET 11/16						1	
-10	Y2-A27ET 11 1/8						1	
-9	Y2-A27ET 13 5/16						2	
-8	Y2-A27ET 13 7/16						1	
-7	Y2-A27ET 13 5/8						1	
-6	Y2-A31T X 13 1/16						1	

PARTS LIST PER ASSY.

ASSY DWG. No.	MODEL	NEXT ASSY	REQ.
	PBY-5A	28B5100	1
	PBY-5	28B5100	1

REQUIREMENTS PER AIRPLANE

REPLACES — CHG. NO.

REPLACED BY — SUPT. NO.

LAST NO. ENGINEERING RELEASE DRAWING SHEET: DRAWING 28B5226 SHEET 1 OF 1

STAMP PART NUMBER WHERE SHOWN

"10" ON #22 EON

A C			6-8-42	LOC.	
NAVY	NOTED		APPROVED		
HEAT TREAT	FINISH		DRAFT	CHECK	STRESS

NAME FLOOR - HULL - RADIO OPERATORS

CONSOLIDATED AIRCRAFT CORP. San Diego, Calif.

OPP HAND

DWG. G

28B5226

E.O. 26986

LET	ALTERATION	DATE	BY	LET	ALTERATION	DATE	BY
A	NOTCH, #18 HOLE ADDED-ALSO 1 SCREW & 1 NUT ADDED TO A.M.	9-29-43	CHELLIS				
B	-5 WAS -7, Y-2-A19T WAS X6076, SPOTWELDS WERE RIVETS ON-A4-5, NO WT CHG.	8-8-44	BRIN				

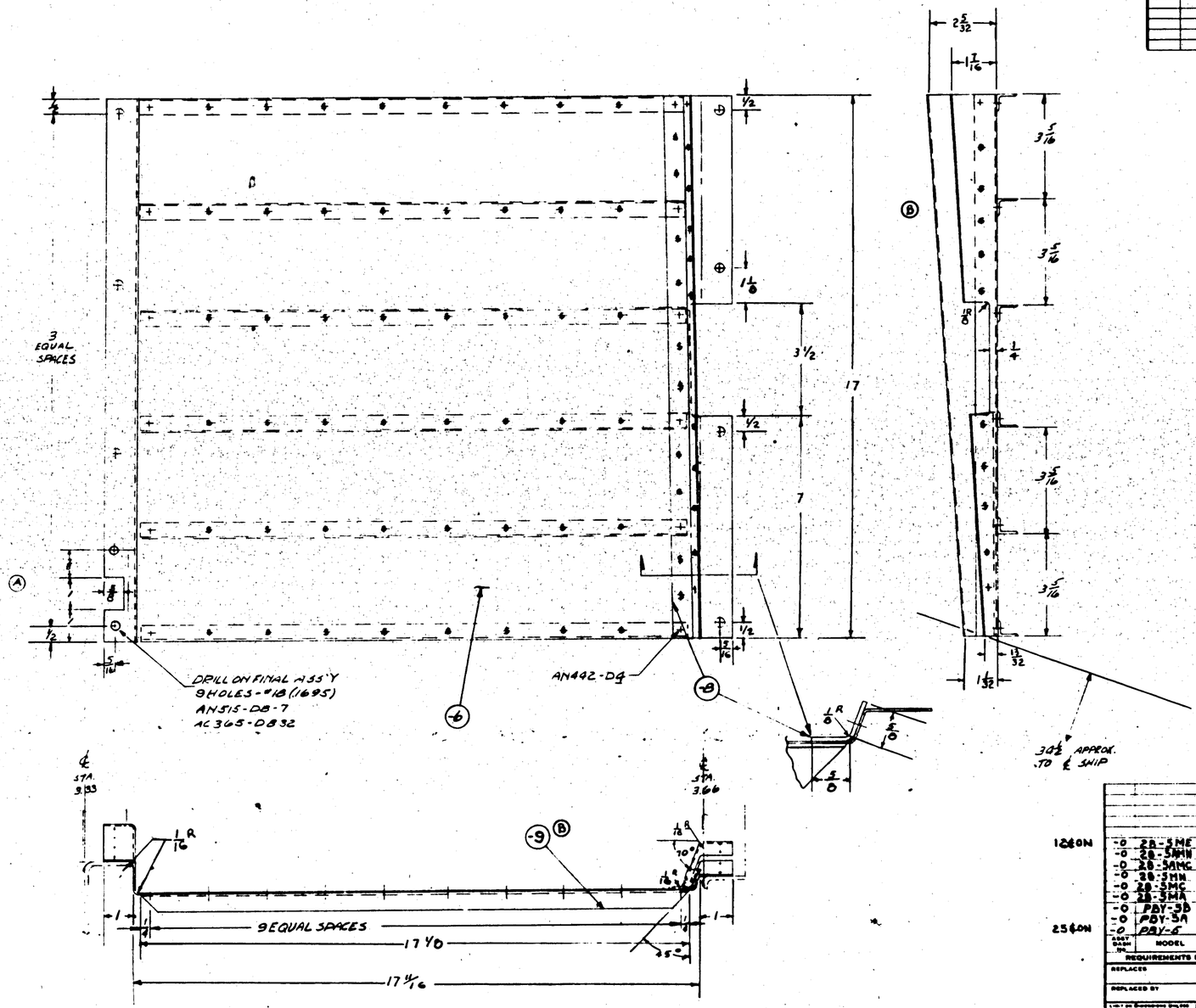

FINISH CODE	
Z	ANODIC TREATMENT
P	P-27 PRIMER
AP	ALUMINIZED PRIMER
C	CADMIUM PLATE

	MODEL	NEXT ASSY	REQ.
-0	28-5ME	28B5100	
-0	28-5MN		
-0	28-5AMC		
-0	28-5MN		
-0	28-5MC		
-0	28-5MA		
-0	PBY-5B		
-0	PBY-5A		
-0	PBY-6	28B5100	1

12 ON

25 ON

REQUIREMENTS PER AIRPLANE

REPLACES — CALG 1171

REPLACED BY — ACT 1171

LIST OF STANDARD PARTS AND STANDARD DRAWING — SCALE 6"/1'-0"

STAMP PART NUMBER WHERE SHOWN

AN442D4 — 9

AC365 D832 — 9

AN515-D8-7 — 9

PART No	STOCK	MATERIAL	SPEC.	LH	RH	LH	RH	LH	RH	LH	RH
				REQ.	REQ.	REQ.	REQ.	REQ.	REQ.	REQ.	REQ.
	PARTS LIST PER ASSY.			-0		-2		-3		-4	-5?
-3	.064 x 17½ x 17⅝	24ST ALCLAD	47AB	T							
-5	Y-2-A19T X 17⅛	24ST FLT.	46A9	T	6						
-8	025 X 25 X 18	24ST ALCLAD	47AB	T							

A.C. NAVY	NOTED	Z-P ZAP	2-18-44	DRAFT	L.O.?		
HEAT TREAT		FINISH		CHECK	STRUCT	DAY	APPROV.

NAME FOOT REST INSTALL.-HULL RADIO OPERATOR'S

CONSOLIDATED AIRCRAFT CORP. SAN DIEGO, CALIF.

OPP HAND — DWG G SIZE — 28B5227

LET	ALTERATION	DATE	BY	LET	ALTERATION	DATE	BY

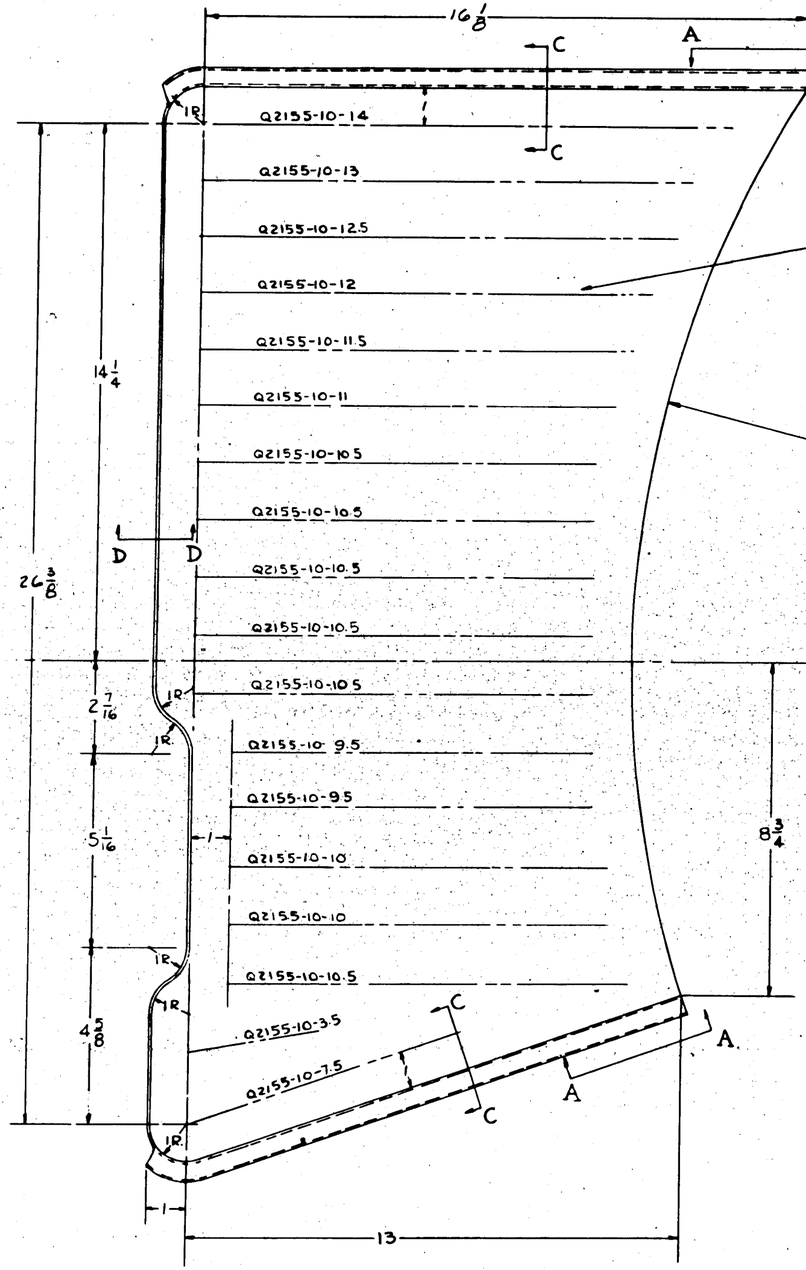

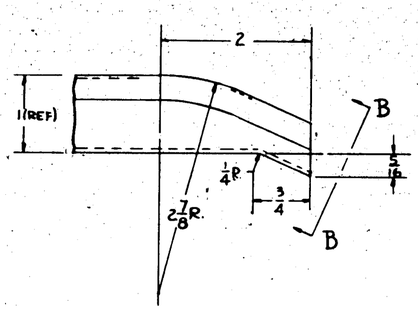

VIEW A-A
SCALE 12"=1'-0"

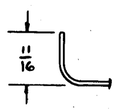

SECTION D-D
SCALE 12"=1'-0"

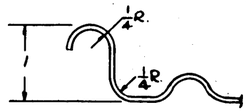

SECTION C-C
SCALE 12"=1'-0"

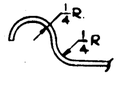

VIEW B-B
SCALE 12"=1'-0"

FINISH CODE

Z	ANODIC TREATMENT
P	P-27 PRIMER
AP	ALUMINIZED PRIMER
C	CADMIUM PLATE

CONTR. CNG "J"
S.O. 936-17

	ASSY DASH NO.	MODEL	NEXT ASSY	REQ
-R	PBY-5A&B	28B5241		1
-L	PBY-5A&B	28B5242		1
R	PBY-5	28B5241		1
L	PBY-5	28B5242		1

REQUIREMENTS PER AIRPLANE

REPLACES — 1.75# GALS 121

REPLACED BY — ACT 121

SCALE 6"=1'-0" UNLESS OTHERWISE NOTED

STAMP PART NUMBER WHERE SHOWN

PART No	STOCK	MATERIAL	SPEC	LH REQ	RH REQ	LH REQ	RH REQ	LH REQ	RH REQ
	.040 X 24 X 40	ALCLAD	47A8-A						
PARTS LIST PER ASSY.				-0	-2	-3	-4	-5	

AC							
NAVY SR-53	Z PAP	2-12-44	L.L.				
HEAT TREAT	FINISH	DRAFT	CHECK	STRUCT	MAT	APPROV	ENG

NAME FLOOR-HULL-STA. 60 OBSERVERS SEAT.

OPP. HAND 28B5242-R

CONSOLIDATED AIRCRAFT CORP. SAN DIEGO, CALIF.

SIZE G — 28B5247

R

25229
28-5AMC,01-10,28-5,PBY5+5A EDC
EDC # 1824
PBY-5,5A, 0A-10, 28-5AMC, MN, MC K

PBM-5,5A, 0A-10, 3 - 5AMC, MU, MC - EDC 4008
E.O.A 16516 K

LET	ALTERATION	DATE	BY
A	1 V8 DIM. WAS 1 3/8	10-30	[illegible]
B	Q2155-10-40 WAS Q2155-10-5	6-20-41	MUIT
C	CHGE. ON PAGE OF PWG. 1 DIM. 7/8 WAS 1 3/8 R. 2 R WAS 2 3/4 WAS 2 3/8 WAS 2 R. G WAS 3 5/16, 11° WAS 12° 10 5/16 WAS 10. ADDED DIM. 9 3/16, 1/8 R. 3/8 FOR CUTOUT. REMOVED 1/8 DIM.	8-18-41	HORN
D	SEC. A-A V8 R 1/16 WAS 1/8 R.	8-21-41	SMITH
E	[illegible]	3-8-42	[illegible]

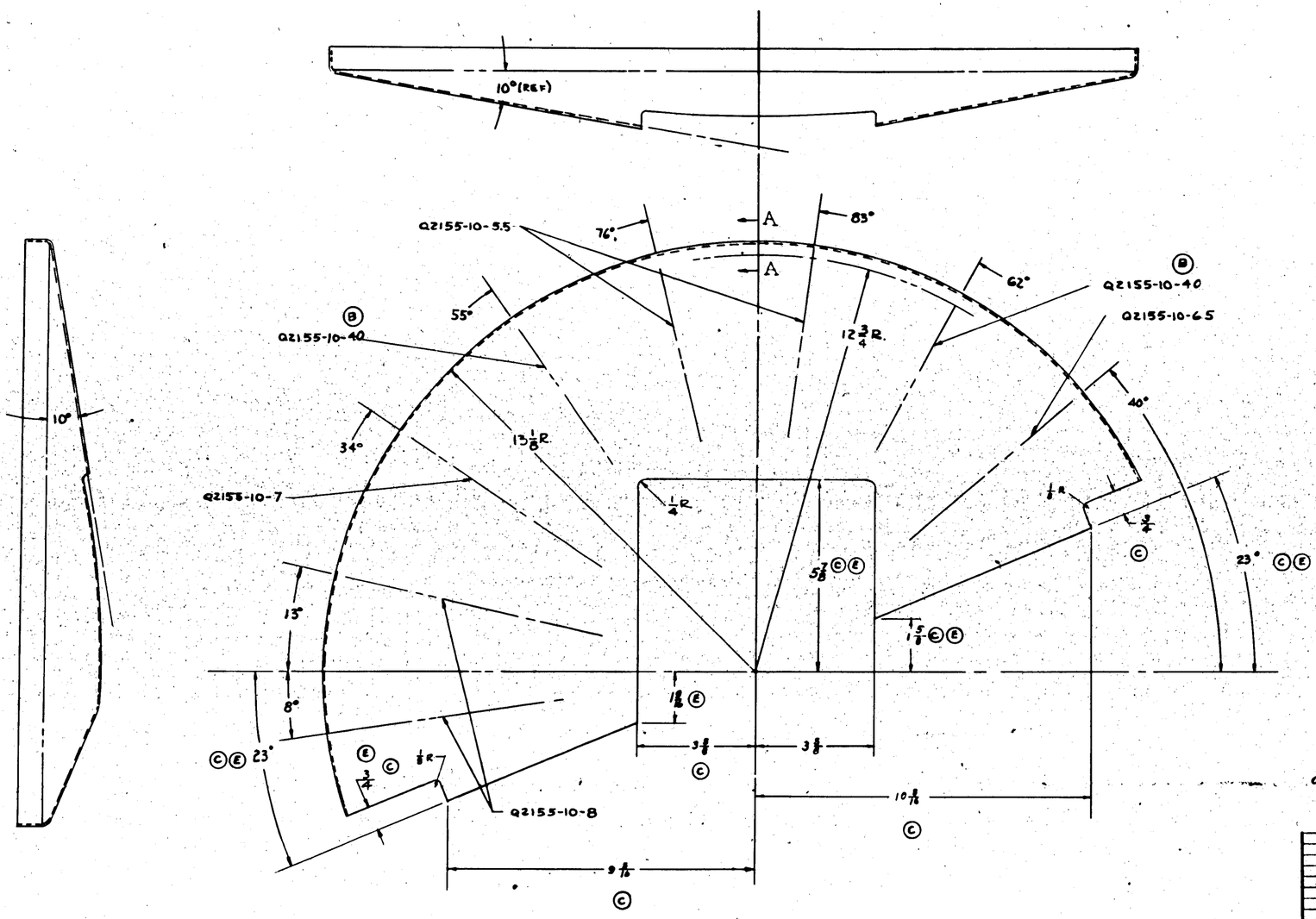

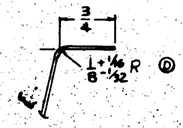

SECTION A-A
SCALE 12"=1'-0"

FINISH CODE

Z	ANODIC TREATMENT
P	P-27 PRIMER
AP	ALUMINIZED PRIMER
C	CADMIUM PLATE

CONTR. CHG "J"
SO. 936-17

R	28-5	MN	28B5241		
L		MN			
R		MC			
L		MC			
R		ANC			
L	28-5	ANC			
R		AMN			
L		AMN			
R	PBY-5 5A (5B)				
L	PBY-5 5A (5B)		28B5244		

ASSY GRADE No.	MODEL	NEXT ASSY	QTY

REQUIREMENTS PER AIRPLANE

REPLACES 1.2 GAUG. 127

REPLACED BY ASY 127

LINES ON ENGINEERING DRAWING REPRESENTING DIMENSIONS ARE SHOWN AS ½ ± ½°

SCALE 6"=1'-0" NAT'S

STAMP PART NUMBER WHERE SHOWN

PART No	STOCK	MATERIAL	SPEC	LH RH REQ. -0	LH RH REQ -2	LH RH REQ -3	LH RH REQ -4	LH RH REQ -5
4	.040 X 19 X 35	ALCLAD	4148-A					

PARTS LIST PER ASSY.

AC NAVY 48-53 HEAT TREAT | Z-RAP FINISH

DRAFT 7-13-40 LWS | CHECK | STRUCT | MAT | APPROV | DRG

NAME COVER-HULL-STA. 6.4 EJECTED LINK & SHELL RET.

CONSOLIDATED AIRCRAFT CORP. San Diego, Calif.

OPP. HAND 28B5248-R

DRG G SER 28B5248

R

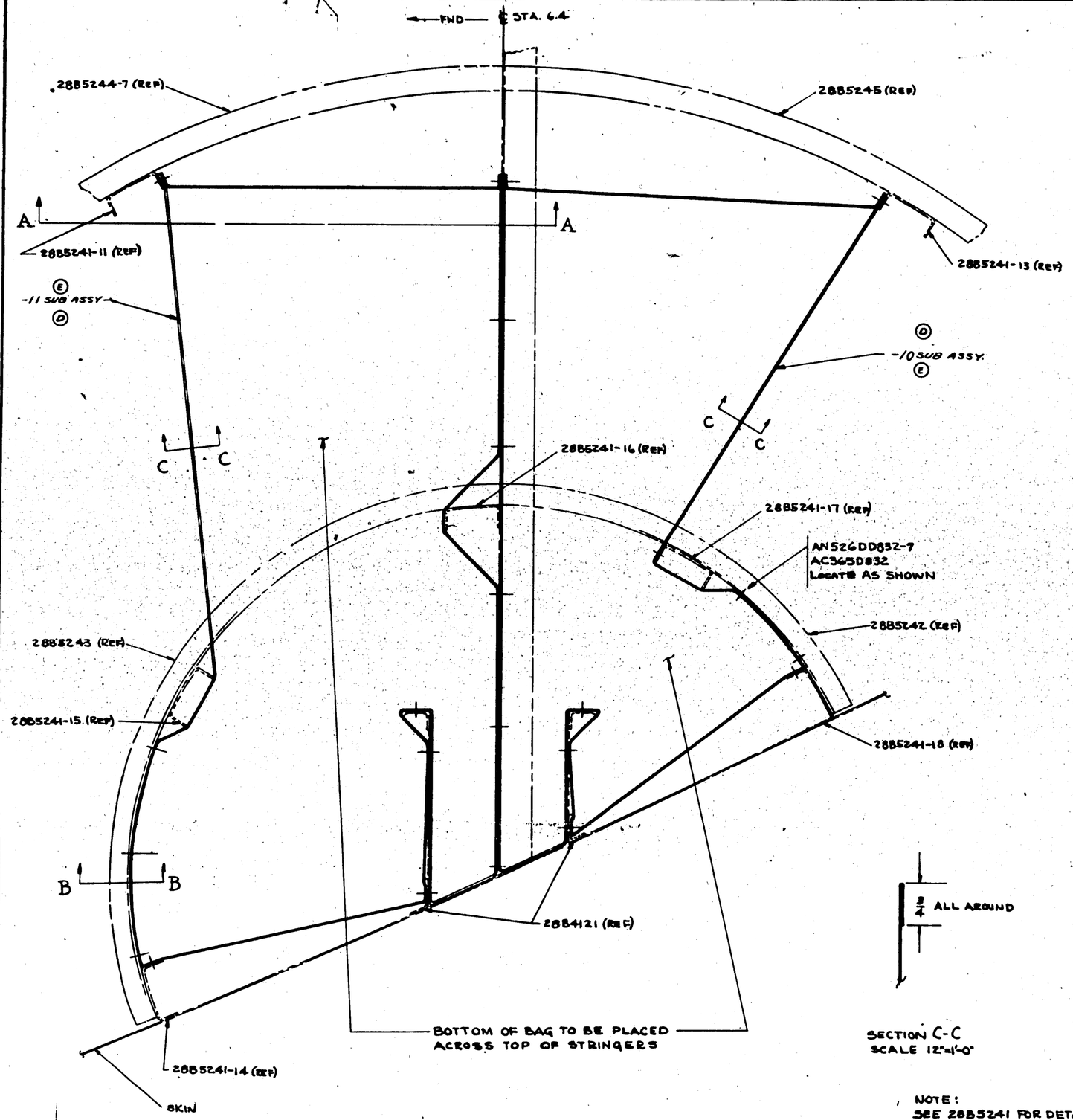

LTR	ALTERATIONS	DATE	BY
A	[illegible]		
B	[illegible]		
C	CHGD. MATL. FROM CLIVE BRAS. TO CLIVE BRAS. R.D.		
D	-10 SUB ASSY. WAS -7 YR. -11 SUB ASSY. WAS -8 YR. WT. CHG. NEG.	6-1-54	CHASE
E	D CHANGE NOT COMPLETE NO WT. CHG		
F	-10 WAS -11 -R WAS -10 -11 NO WT. CHG		

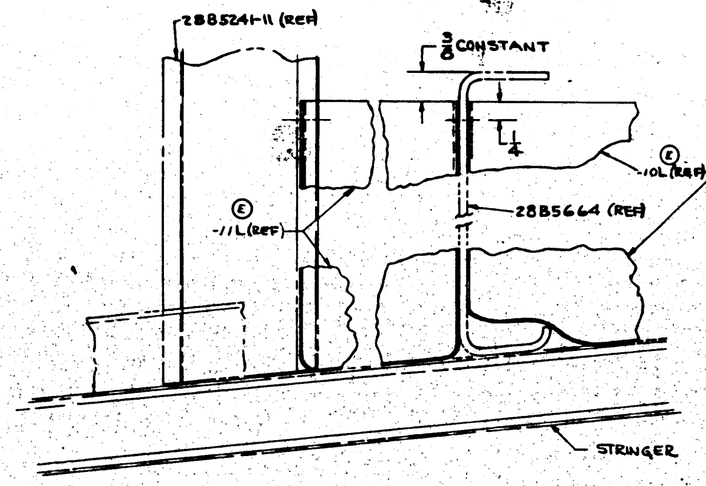

SECTION A-A
SCALE 12"=1'-0"

NOTE—
EXACT DIMEN. TO BE DETERMINED
ON FIRST INSTALL.

SECTION C-C
SCALE 12"=1'-0"

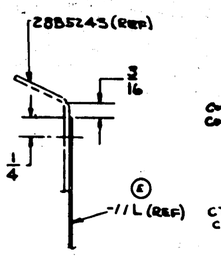

SECTION B-B
SCALE 12"=1'-0"

CONTR CHG "J"
S.R. 936-17-
INST BY CHG. STARTING
WITH #25 PBY-5

-21	21X28	FAB-6	2404	1	
-20	8X28			1	
-19	6X18			1	
-18	6X8			1	
-17	7X9	FAB-6	2404	1	
-11-R	SUB ASSY.			1	
-16	5X6	FAB-6	2404	1	
-15	20X30			1	
-14	7X20			1	
-13	5X15			1	
-12	6X8	FAB-6	2404	1	
-10-R	SUB ASSY.			1	
-R	RR-SAMC	2881000		1	
-L	RR-SAMC	2881000		1	
-R	PBY-5A	2881000		1	
-L	PBY-5A	2881000		1	
-R	PBY-5	2881000		1	
-L	PBY-5	2881000		1	
-R	PBY-5A	2881000		1	
-L	PBY-5A	2881000		1	
-R	PBY-5	2881000		1	
-L	PBY-5	2881000		1	
2-N	RR-SAMC	2881000		1 REF	
2-L	RR-SAMA	2881000		1 REF	AC365 D832
2-L	RR-SAMC	2881000		1 REF	AN526 DD832-7
-11-R	SUB ASSY			1	
-11-L	SUB ASSY			1	
-10-R	SUB ASSY			1	
-10-L	SUB ASSY			1	

PART NO.	STOCK	MATERIAL	SPEC.	LH RH REQ. -0	LH RH REQ. -2	LH RH REQ. -3	LH RH REQ. -4	LH RH REQ. -5
PARTS LIST PER ASSY.								

A C						
NAVY —	—		2-19-44			
HEAT TREAT	FINISH	DRAFT	DESIGN	STRESS	MAT.	WEIGHT

NAME INSTALL-HULL-EJECTED LINK & SHELL RETAINER
CONSOLIDATED AIRCRAFT CORP. SAN DIEGO, CALIF.
SIZE G
SHP. NUMB 2885249-R
DWG. NO. 2885249

NOTE:
SEE 2885241 FOR DETAILS OF FLOORING
THIS INSTALLATION IS SYM. ABOUT ℄ SHIP

R 2885249

LET	ALTERATION	DATE	BY
A	DELETED 28B5340-2, 28B5346, AN442-AD3 & AD4 RIVETS, ADDED AN442-AD3 RIVETS, REVISED NOTE 3, REF A-A & B-B, ADDED AC226-3, AC365-632 & AN505-6-8		
B	W/ B/H ADDED (PBY-5 28B4000-(REQ'D) PBY-5A-28B5300-(REQ'D) REMOVED NOTE-STA. 477 & ADDED STA. F ON WINDOW IN NAVIGATOR'S COMP'T (PBY-5 #1 ON & PBY-5A #103 & ON)-ALL W/E CHG. E.O.A52750	4-11-41	
C	ADDED DIM. & W/E FOR PBY-5 ONLY & LIMITED 5 5/16 FOR ALL OTHER MODELS. NO WT. CHG. E.O.A52280	1-19-42	

17 7/8 (REF)

5 5/16 FOR ALL OTHER MODELS
6 1/16 FOR PBY-5 ONLY ©

1 1/16

5 5/16

7/8

11/16

1/2

STR #522

14 3/8 REF.

6 1/4 REF.

8 1/4

STR #524

1 9/16

11/16

STR #526

28B5162 REINF.

A A

2 7/16 4 7/16 4 7/16 2

AN442 AD3 RIVETS

© STA #4.50 - ALL OTHER MODELS

Ⓑ STA. #2.50 -
-ON WINDOW IN NAVIGATOR'S COMP'T (PBY-5 #1 & ON - PBY-5A #103 & ON)

STR. 526 (REF.)

VIEW A-A

AC226-3 STUD
AC365-632 NUT
AN505-6-8 SCREW
G7102-A6 WASHER

C88476-103 & ON →
C91876-1 & ON →

ASSY DASH NO.	MODEL	NEXT ASSY	REQ.
PBY-5A	28B5300		
PBY-5	28B4000		
PBY-5B	28B4000		
28-5AMC	28B5320		
28-5MC	28B1000		
28-5MA	28B1000		
28-5ME	28B5000		

REQUIREMENTS PER AIRPLANE

REPLACES — Calc. Wt.

REPLACED BY — Act. Wt.

Limit on Dimensions Unless Otherwise Specified 1/32 SCALE 12" = 1'0"

STAMP PART NUMBER WHERE SHOWN

PART No	STOCK	MATERIAL	SPEC	LH RH REQ -0	LN RH REQ -2	LH RH REQ -3	LH RH REQ -4	LH RH REQ -5
G7102-A6								
AC226-3 AC365-632								
AN505-6-8								

PARTS LIST PER ASSY.

A C
NAVY
HEAT TREAT — FINISH

7/6/42 DRAFT — CHECK — STRUCT — MAT — APPRO. — ENGR.

NAME STUD, INSTALL.-HULL-PORT (FIXED-MECH'S COMP'T)

OPP HAND NONE

CONSOLIDATED AIRCRAFT CORP. SAN DIEGO, CALIF.

DWG G SIZE

28B5253

R

LET	ALTERATION	DATE	BY	LET	ALTERATION	DATE	BY
A	DELETED Q7006 AC11-.125 AN442-AD3 28F5784 AND 28F5760-2. ADDED AC365-632 AC224-3 & AN505-6-10	4-11-41	MYERS				
B	ADDED DIMS 11/16 & 1 3/16 MOVED CURTAIN (NEW CHG) ADDED VIEW FOR 28 MODELS	8-10-41	[illegible]				

E.O. A42245

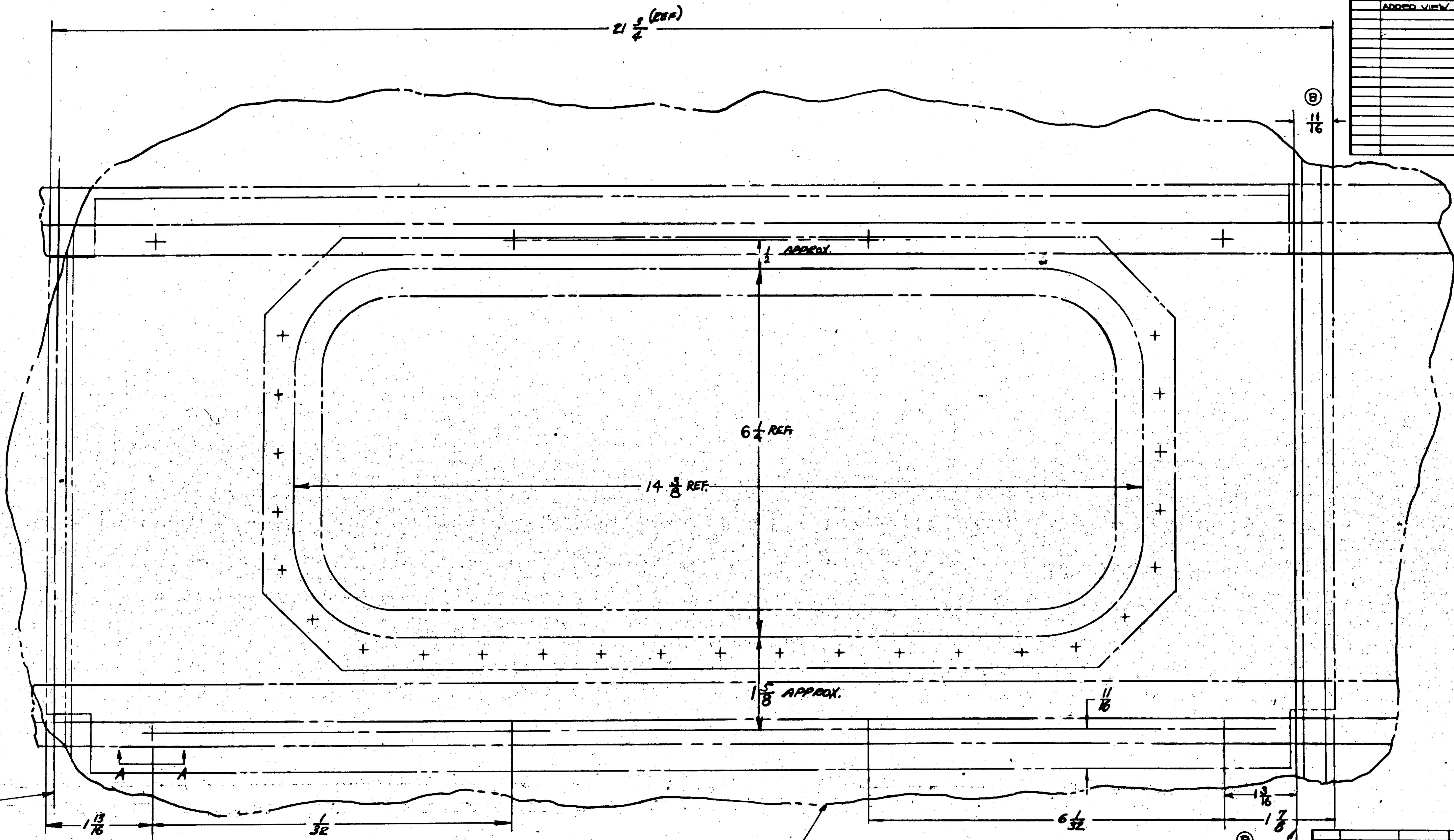

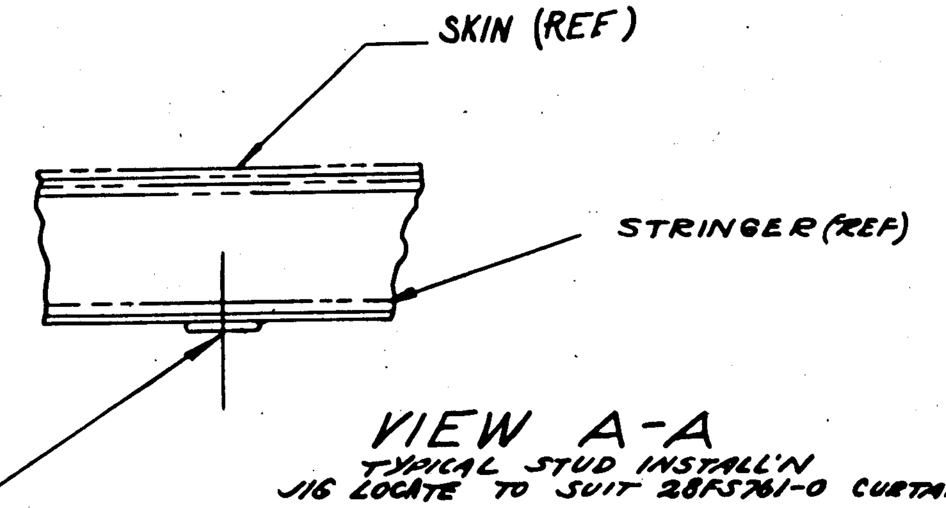

VIEW A-A
TYPICAL STUD INSTALL'N
JIG LOCATE TO SUIT 28FS761-0 CURTAIN (REF)

VIEW FOR 28-5AMC, MC, MA & ME

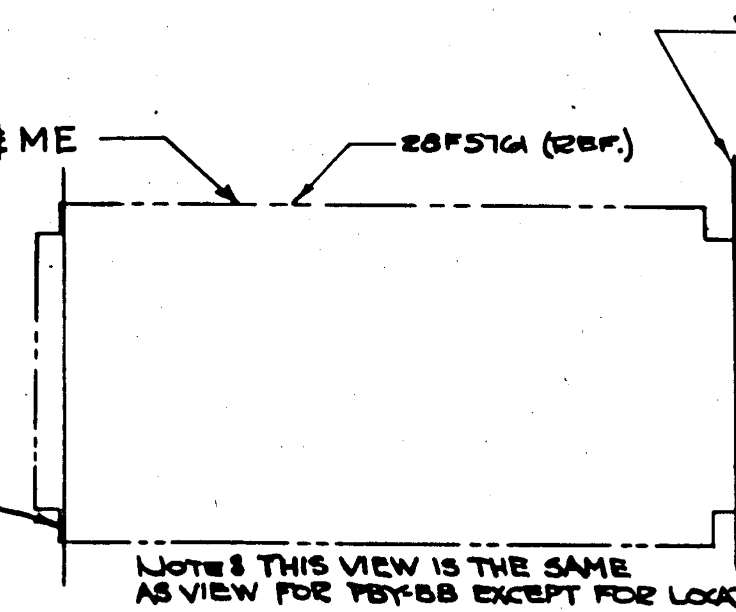

NOTE: THIS VIEW IS THE SAME AS VIEW FOR PBY-5B EXCEPT FOR LOCATION OF 28F5761 (REF)

ASSY DASH NO.	MODEL	NEXT ASSY	REQ
-R	PBY-5B	28B6000	1
-L	PBY-5B	28B6000	1
R	28-5AMC	28B5500	1
L	28-5AMC	28B5500	1
R	28-5MC	28B1000	1
L	28-5MC	28B1000	1
R	28-5MA	28B1000	1
L	28-5MA	28B1000	1
R	28-5ME	28B1000	1
L	28-5ME	28B1000	1

REQUIREMENTS PER AIRPLANE

REPLACES — CALC WT
REPLACED BY — ACT WT
LIMIT ON DIMENSIONS UNLESS OTHERWISE SPECIFIED ± 1/32 — SCALE 12" = 1'0"
STAMP PART NUMBER WHERE SHOWN

PART No	STOCK	MATERIAL	SPEC	-0 LH	-0 RH	-2 LH	-2 RH	-3 LH	-3 RH	-4 LH	-4 RH	-5 LH	-5 RH
Q7102-A6				8	8								
AC224-3				8	8								
AC365-632				8	8								
AN505-6-10				8	8								

PARTS LIST PER ASSY

A C			DRAFT	CHECK	STRUCT	MAT	APPR'V	ENG
NAVY			7/27/40 [illegible]	[illegible]		[illegible]		[illegible]
HEAT TREAT	FINISH							

NAME STUD INSTALL.-HULL PORT (FIXED REAR)
OPP. HAND 28B5254R
DWG SIZE G — 28B5254
CONSOLIDATED AIRCRAFT CORP. SAN DIEGO, CALIF.

28B5254R

LET	ALTERATION	DATE	BY

LET	ALTERATION	DATE	BY
A	DELETED & MADE ALL - 18 E AN442-3D3 AND 28F5760-6 AND 28F5925-4, AN505-6-8 AC224-3, AC365-632, Q7102-A6 AND AN442-03 AND REVISED INSTALL'N.		
B	REV. REQTS/AIR P. WT. CHG. NEG.	4-1-46 MYERS 10-28-46 EMMONS	
C	Q7102-A6, AC365-632 AC224-3, AN505-6-8 (4) REQ'D LH & RH WAR (4) EACH L HAND REM. 28F5760-6 L & R H AN442-03 WT. CHG. NEG.	10-28-46	

28F5761-2 (REF)

STR. -332 (REF)

STR. -334 (REF)

STR. -336 (REF)

STR. -338 (REF)

1 3/4

2 1/16

5 1/8

1 3/4

16 1/4

R.H. SHOWN
L.H. OPPOSITE

22 19/16

3/8

2 1/16

5/16 MIN

2 3/8

5 1/8

B B

C C

A A

LOCATE CURTAIN STUDS IN CONJUNCTION WITH 28F5761-2 (REF) CURTAIN OR FROM JIG TO SUIT. (JIG ALREADY MADE)

28F5925-6 CLIP (2 PLACES) REF. PICK UP EXISTING RIVET HOLES.

28F5761-2 (REF)

FLANGE OF BELT FRAME (REF)

1 5/8

6 27/32

6 27/32

1 5/8

AC224-3 STUD (24)
AC365-632 NUT (24)
AN505-6-8 SCREW (24)
Q7102-A6 WASHER (24)

© ©

℄ STA #2.50

℄ STA #3.00

AC224-3 STUD (4) (REF)
AC365-632 NUT (4) (REF)
AN505-6-8 SCREW (4) (REF)
Q7102-A6 WASHER (4) (REF)

28F5925-6 CUP

STR. -338 (REF)

SECTION C-C
(REF) STA. 2.50 ℄

SKIN LINE (REF)

SECTION B-B
(REF) STA. 3.00 ℄

© ©

AC224-3 STUD (REF.)
AC365-632 NUT (REF.)
AN505-6-8 SCREW (REF.)
Q7102-A6 WASHER (REF.)

VIEW A A

CB8476 #103 & ON CB1876 #31 & ON	L	PBY-5A	28B5500	1	Q7102-A6			R	R				
	L	PBY-5	28B6000	1									
	R	PBY-5B	28B6000	1									
	L	PBY-5B	28B6000	1									
	R	28-5AMC	28B5500	1									
	L	28-5AMC	28B5500	1	AC365-632			R	R				
	R	28-5MC	28B1000	1	AC224-3			R	R				
	L	28-6MC	28B1000	1									
	R	28-5MA	28B1000	1	AN505-6-8			R	R				
	L	28-5MA	28B1000	1									
	R	28-5ME	28B1000	1									
	L	28-5ME	28B1000	1									
AIRPL. #604 ON	ASSY GASH NO.	MODEL	NEXT ASSY	NO.	28F5926-6			R	R				
	REQUIREMENTS PER AIRPLANE												
FOR AIRPL #604 ON →	REPLACED 28B5256 L & R												
	REPLACED BY												
					PART NO	STOCK	MATERIAL	SPEC	LH RH REQ	LH RH REQ	LH RH REQ	LH RH REQ	LH RH REQ
					PARTS LIST PER ASSY.				-0	-2	-3	-4	-5

STAMP PART NUMBER WHERE SHOWN

1/32 SCALE 6" = 1'0"

AC
NAVY
HEAT TREAT FINISH

DRAFT CHECK STRUCT MAT

NAME CLIP INSTALL. - HULL NAV'S. WINDOW

CONSOLIDATED AIRCRAFT CORP. SAN DIEGO, CALIF.

OPP HAND 28B5255-R

DWG G SIZE 28B5255

-R

LET	ALTERATION	DATE	BY

LET	ALTERATION	DATE	BY
A	OBSCURED DETAIL DWG DELETING G7006-ALH-125, AN442-AD3, 28F5760-0 & 28F5784. ADDED AC224-3, AC365-632 AN505-6-10 & AC229-3 TO LIST OF MATERIAL. LEFT INSTALLATION AS SHOWN ON BOARD PICTURE TO SUPER INSTALL CHART AS APPL "1-"59 INCL.	5/14/42	[illegible]

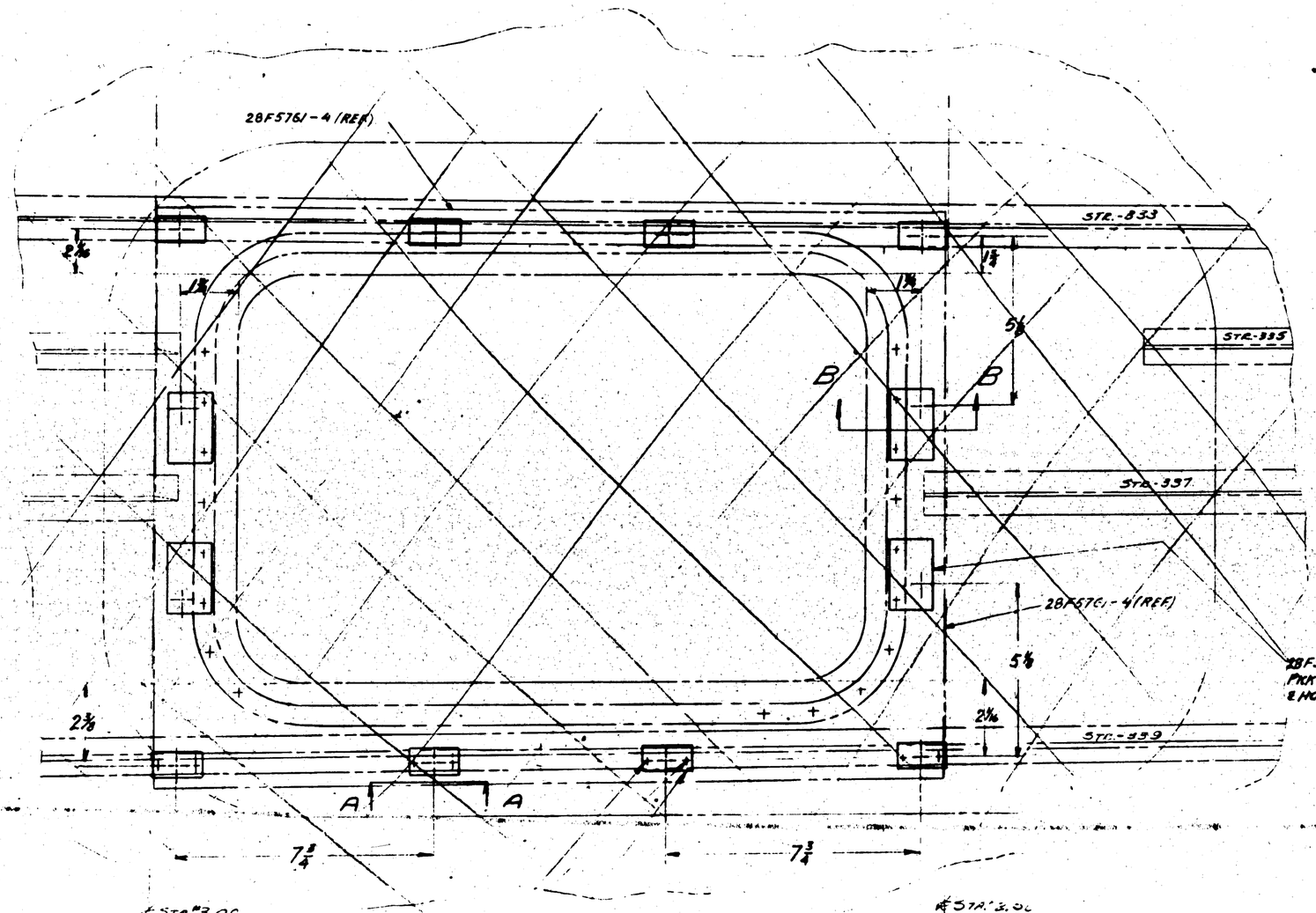

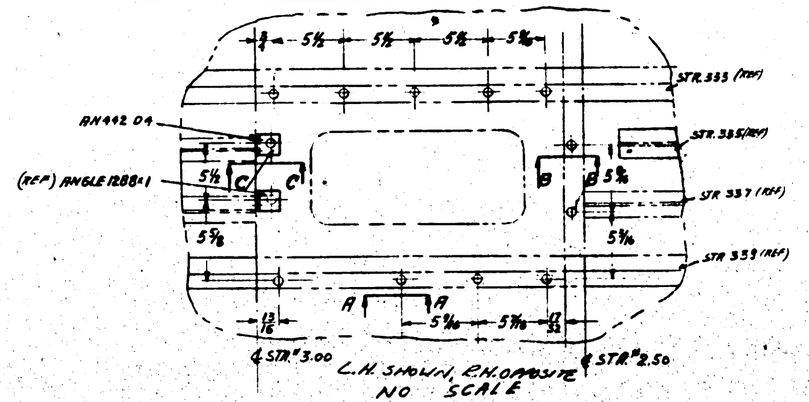

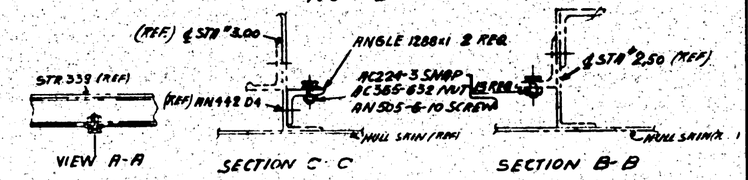

NOTE: THIS TYPE OF INSTALLATION IS O.K. FOR THE FIRST 15 AIRPLANES. SEE DWG 28F5761, SHEET 2 WINDOW COVER 28F5761-4 DWG FOR RECORD ONLY.

28F5760-0 CLIP (4 PLACES) PICK UP 2 EXISTING BOLTS & HOLD DIM. TO ℄ OF STUD.

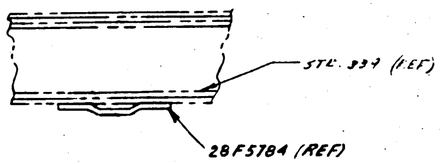

VIEW A-A
SCALE 1"=1'-0"

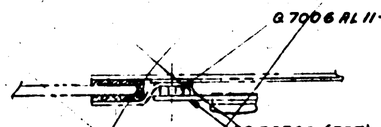

SECTION B-B
SCALE 12"-1'-0"

"1-58

"0-59 INCL

FOR APPL "60 ON →

LET	MODEL	NEXT ASSY	QUAN
A	PBY-5	28B1000	
B	PBY-5	28B1000	
C	28-5ME	28B1000	1
D	28-5ME	28B1000	

REQUIREMENTS PER AIRPLANE

REPLACED — 20 CAL WT.

REPLACED BY 28B5255 CHANGE NO. ACT. WT.

LIST ON DRAWING MACHINE SCALES OF DRAWING — SCALES OF PARTS LIST — 1/32 — AS NOTED

STAMP PART NUMBER WHERE SHOWN

PART NO	STOCK	MATERIAL	SPEC	LH REQ	RH REQ	LH REQ	RH REQ	LH REQ	RH REQ	LH REQ	RH REQ
				-0		-2		-3		-4	-5
AN442-D4				4	4						
AN505-6-10				13	13						
AC365-632				13	13						
AC229-3				13	13						
28B5256	K1288 X 1	AL ALLOY	ALCLAD QUOT								

PARTS LIST PER ASSY.

A.C. ____ NAVY ____ HEAT TREAT ____ FINISH ____

DRAFT 7/27/42 — CHECK — STRUCT — MAT — APPROV — ENG

NAME CLIP INSTALL-HULL-STA "2.5 -"3.0 STARBD SIDE WINDOW

OPP HAND 28B5256-2

CONSOLIDATED AIRCRAFT CORP. SAN DIEGO, CALIF.

DWG G

SIZE

28B5256

LET	ALTERATION	DATE	BY
M	ADD "F CHG'D. Q3740-K8-8(REF.),		
(OMIT)	AN326-DD1032-10(2), AC343-D1032,		
	(2), AN960-416(4) TO "Q3790-K8-8(1),		
	AN526-DD1032-9(1), AC365-D1032(1),		
	AN960-A10(1)". NO WT. CHG.	9-21-60	MOORE
N	TO DIM ADDED "Q1601-23(1)" AT AC225-9 &		
	WASH #3, ADDED "SEE NOTE 4" TO FACE, AT		
	CALLOUT OF AC225-9(1), ADDED "Q1601-23"		
	& "SEE NOTE 4." ADDED NOTE 4. NO WT CHG.	23-60	MOORE

LET	ALTERATION	DATE	BY
	ASSY ONLY. NO WT. CHG.	10-26-60	MOORE
J	ADDED NOTE "PER NP... 28B5224"		
	-2M 2 7/8 DIM. DIM'S W AS 2.		
	NO WT. CHG.	11-28-60	MOORE
K	ADDED VIEW FOR -2 ASSY		
	IN B/M - 2 EA. LH & R.H.		
	WAS - 1R. - 1 EA. LH & R.H.		
	WAS - 6. WT CHG NEG.	4-24-61	MOORE
L	ON FACE, 8 7/8 DIM. WAS 9		
	NEG. WT. CHG.	7-16-61	PITTMAN
M	IN B/M REMOVED AC225-9(1), CHG'D REF'S		
	OF Q3793-6 FROM (1) TO (2), OF AC365-D1032		
	FROM (3) TO (4), OF AN526-DD1032 FROM		
	(6) TO (7), ON FACE REMOVED 7 7/8 DIM. TO		
	SECTION A-A, ADDED "Q3790-K(1), CHG'D CHG		
	OF Q3740-K8-8 (REF), Q3789-8(REF),		
	AN526-DD-1032-8 (8), AC365-D1032		
	(REF.)" TO "Q3740-K8-8(1), Q3789-8(1), AN		
	526-DD-1032(1), AC365-D1032(1)", CHG'D		
	"AC225-9(4), Q1601-23-9(1), AC343-D32		
	(REF.) Q7102-A8(4)" TO "AC225-9(1),		
	Q3810-D3-8(1), AC365-B32(1), Q7102-		

LET	ALTERATION	DATE	BY
A	CHANGED TO "A ASSY WAS -2" (1 REQ'D)		
	-1 REQ'D ON ASSY	2-11-61	MOORE
B	DIMENSION ADDED	2-28-61	MOORE
C	REPLACE 2 RIVETS WITH SCREWS	3-6-61	MOORE
D	NOTE ADDED	3-28-61	MOORE
E	REPLACED B26-DD1032 WITH		
	B26-DD1032.	11-7-61	MOORE
F	ADDED VIEW B-B, Y-Y, NOTE.	4-2-62	MOORE
	ADDED Q3790-K8-8, Q3789-8(REF.),		
	AC365-D1032, AC343-D1032,		
	AN526-DD1032, AN960-A10(2),		
	AN960-A10, AN526-DD1032-8, Q3740-K8-8		
G	Q3810-D3-8 (1) WAS Q3810-D3-6		
	WT CHG'D. NEG. 8-23-62 PITTMAN		
H	ADDED VIEW D-D, CREATED 10A 8 SETS		
	-2 "A" ASSY FOR PBY-5		
	*90 & ON 6 PBY-5A'S 15		
	ON ADDED NOTE: TRIM		
	CORNER ---- R.H. INSTALLATION		
	-2 ASSY ONLY ADDED		
	STA. 6.6 & 2" LOC. DIM. FOR -2		

FINISH CODE	
Z	ANODIC TREATMENT
P	P-37 PRIMER
AP	ALUMINIZED PRIMER
C	CADMIUM PLATE

PART NO	STOCK	MATERIAL	SPEC.	-0	-2
AC456-07-4				4	4
AN526-DD1032-10				4	4
Q7102-A8				2	2
AN960-A10				2	2
AN960-416				2	2
Q3799-8				2	2
Q3741-K8-8.5				2	2
Q3741-K8-10				1	1
Q3741-K8-8.5				1	1
Q3740-K8-8				1	1
Q3740K8-8				1	1
AN501-04				1	1
Q4303-D8				-	-
Q3301-D8-8				6	6
Q3810-D3-8				4	4
Q1601-23 (SEE NOTE 4)				1	1
AN442-D8				1	1
AN442-D5				1	1
AN442-D3				1	1
AC343-D1032				8	8
AC366FD1032				2	2
AC365-D1032				4	4
AC456-8332				1	1
AC225-9 (SEE NOTE 4)				1	1
AN960A10				1	1
AN3200016032-10				7	7
AN3200016032-8				1	1
AN3-DD12A				2	2
28B5258-8				1	1
28B5258-1				1	1
28B5259-8				1	1
28B5259-1				1	1
28B5274-8				1	1
-28	O&O DIA FLUSH	CRES	SEE NOTE 2	2	2
-29	NAS-464Y X H.10				2
-24	K12BUCK 1/8	2ALST EXTR	61AD5T	2	2
-23A	K7BUCK 7/8	2ALST EXTR	61AD5T	2	2
-23	K7BF X 7/8	2ALST EXTR	61AD5T	2	2
-22B	K12BUCK 1/4	2ALST EXTR	61AD5T	1	1
-22A	K12BUCK 1/2	2ALST EXTR	61AD5T	1	1
-21E	K5401XB 1/8	2ALST EXTR	61AD5T	1	1
-21C	K5401 X 2 1/8	2ALST EXTR	61AD5T	1	1
-20	K13428A X 1 1/2	2ALST EXTR	61AD5T	2	2
-19B	K13434A29 1/8	2ALST EXTR	61AD5T	1	1
-19A	K13434A29 X 8 1/8	2ALST EXTR	61AD5T	1	1
-18B	K13434A29 X 10 1/8	2ALST EXTR	61AD5T	1	1
-18A	K13434A29 X 10 1/8	2ALST EXTR	61AD5T	1	1
-18	K12BUCK X10 1/8	2ALST EXTR	61AD5T	1	1
-17B	K13428A25	2ALST EXTR	61AD5T	1	1
-17A	K13434A43	2ALST EXTR	61AD5T	1	1
-17	K13434A43	2ALST EXTR	61AD5T	1	1
-16	K13434A43	2ALST EXTR	61AD5T	1	1
-15	03172A2 1/8	ALCLAD SHT	24AD5T	2	2
-14	C8001A X1 1/8	CORR RES WIRE	2SW15	2	2
-13	C8001A2A 1/8	CORR RES WIRE	2SW15	2	2
-12	C8001A2A1/2 1/8	CORR RES WIRE	2SW15	2	2
-11	V36-A6T4X2			2	2
-10	V36-A6T4X8			2	2
-9B	V36-A6T4X6			1	1
-9A	V36-A6T4X4			1	1
-9	V36-A6T4X8			1	1
-8A	V36-A6T4X6			1	1
-6	V36A6T4X13 1/8			2	2

PARTS LIST PER ASS'Y

AC		8-1-60	
NAVY NONE	Z-P-AP	ALCLAD 2024	
HEAT TREAT	FINISH		

NAME INSTALL-HULL-STEP WAIST GUN ENTRANCE

CONSOLIDATED AIRCRAFT CORP SAN DIEGO CALIF.

28B5260R

G 28B5260

LET	MODEL	MFRS ASS'Y DWG
Z* M	PBY-5A	28B5100 /
Z* L	PBY-5A	28B5100 /
Z* K	PBY-5	28B5100 /
Z* J	PBY-5	28B5100 /
Z* H	PBY-5A	28B5100 /
Z* G	PBY-5A	28B5100 /
Z* F	PBY-5B	28B5100 /
Z* E	PBY-5B	28B5100 /
Z* D	PBY-5A	" /
Z* C	PBY-5A	" /
Z* B	PBY-5	28B5100 1
Z* A	PBY-5	28B5100 1

REQUIREMENTS FOR AIRPLANE

REQUIRED	28 (PBY-5A)
REPLACED BY	
ASS'Y WT.	

UNLESS OTHERWISE SPECIFIED: ± 1/64 — 1/2 PLACE DEC. ± .01 — 3 PLACE DEC. ± .005 — ANGLES ± 1° — 1 STAMP PARTS FOR UNDER SIDE SHOWN

SCALE: 6" = 1'-0" & NOTED

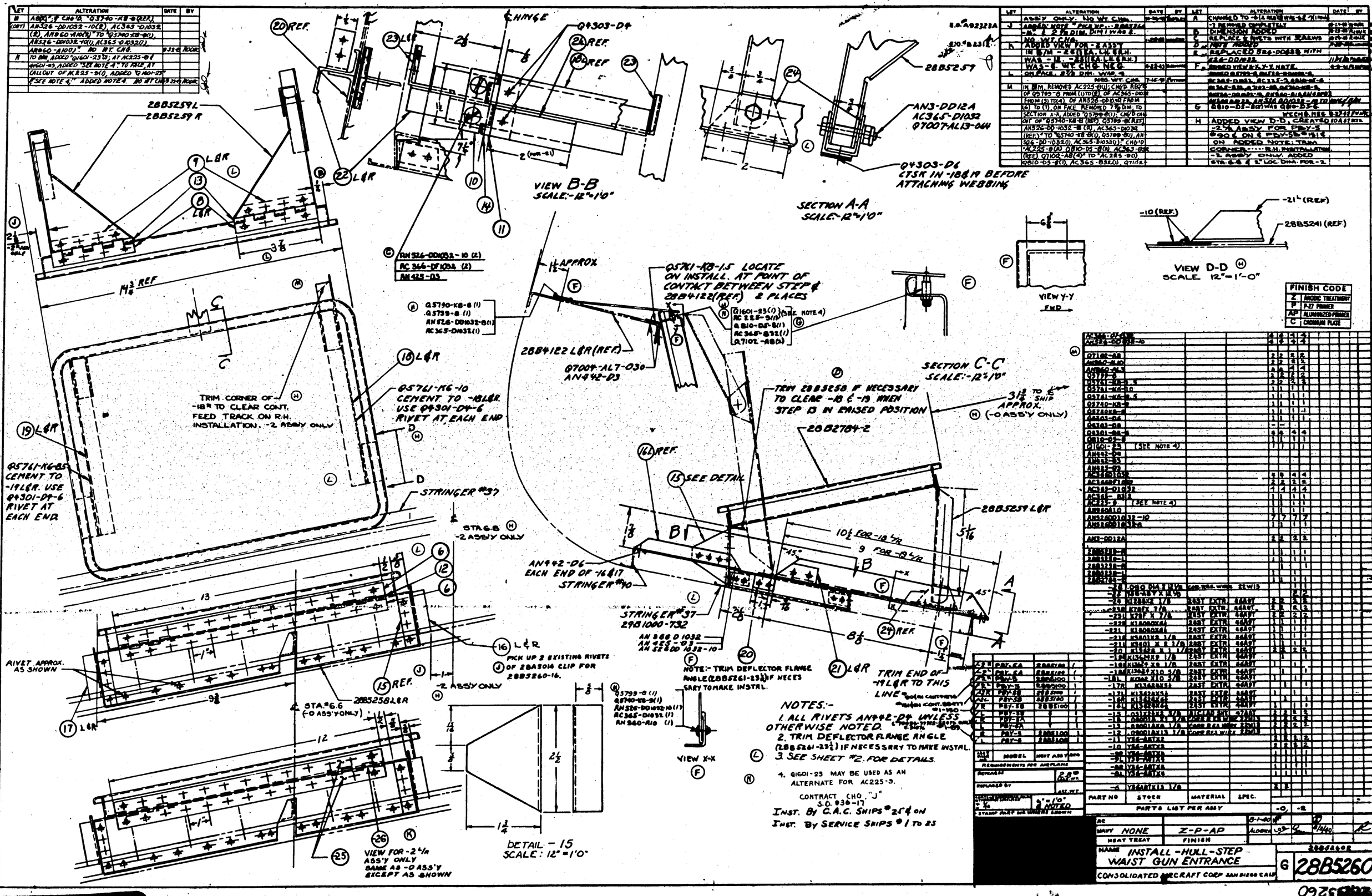

09265262

LET	ALTERATION	DATE	BY
N	TRACED NO WTR CHG.	7-25-43	AGENING

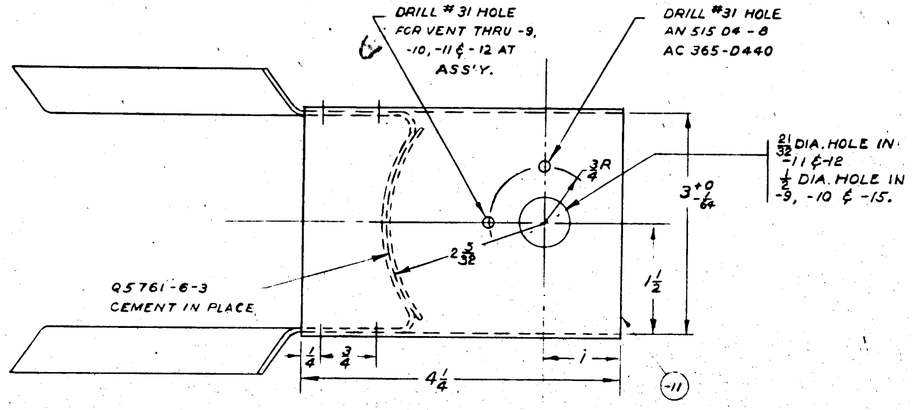
DRILL #31 HOLE FOR VENT THRU -9, -10, -11 & -12 AT ASS'Y.
DRILL #31 HOLE AN 515 04 - 8 AC 365-D440
21/32 DIA. HOLE IN -11 & -12
1/2 DIA. HOLE IN -9, -10 & -15.
3R/4
3 +0 -1/64
2 5/32
1 1/2
QS761-6-3 CEMENT IN PLACE
1/4
3/4
4 1/4
i
-11

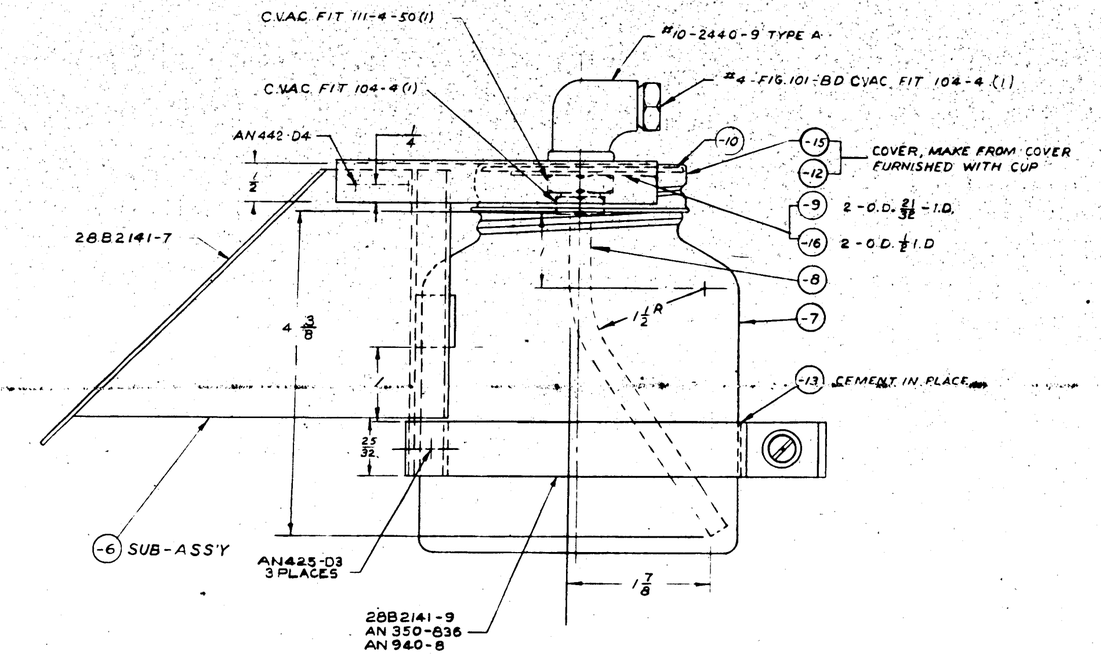

NOTE:
FINISH - 8 & -9 = Z
FOR -11 & -16 = ZP-T-P

#83 TO MCR 291-3

2 IT IS PERMISSIBLE TO USE -7 1 QT. FEED CUP - DEVILBIS GCS-607 MADE OF STEEL. APPLY ON -7 & -12 COTOID PRIMER & COTOID FINISH TO THE INSIDE ONLY, AND FINISH OUTSIDE P-9P, OR IF ALUMINUM CUP, APPLY Z-P-6P TO OUTSIDE ONLY. COLOR IMMATERIAL - GREY, WHITE OR BLACK.

3 C.V.A.C. TO MAKE INST. ON #25 PBY-5 & ON AND FURNISH PARTS FOR NAVY SERVICE INST. ON #1-24 INCL. S.O. 93630 CONTR CH'G R&Q-2

FINISH CODE	
Z	ANODIC TREATMENT
P	P-7 PRIMER
GP	GREEN PRIMER
C	CADMIUM PLATE

ASSY. DASH NO.	MODEL	NEXT ASSY.	REQ.
-13	XP4Y-1	31F3012	2
-12	XP4Y-1	31F3012	2
-11	XP4Y-1	31F3012	2
-10	XP4Y-1	31F3012	2
-9	XP4Y-1	31F3012	2
-8	XP4Y-1	31F3012	2
-7	XP4Y-1	31F3012	2
-16	B24D	32H5033	1
-15	B24D	32B5033	1
-8	B24D	32B5033	1
-7	B24D	32B5033	1
-12	PB2Y-3	29F6906	1
-10	PB2Y-3	29F6906	1
-9	PB2Y-3	29F6906	1
-8	PB2Y-3	29F6906	1
-7	PB2Y-3	29F6906	1
-16	LB-30	32B5033	1
-15	LB-30	32B5033	1
-8	LB-30	32B5033	1
-7	LB-30	32B5033	1
	PBY-5A	28B5262	1
	PBY-5	28B5262	1

REQUIREMENTS PER AIRPLANE

REPLACES 28B5264 8-3-40 1/46 GALS. WT

REPLACED BY ASY. WT.

LIMIT ON DECIMAL PLACES DESIGNATED BELOW: .x ±1/32

SCALE 12"=1'0"

STAMP PART NUMBER WHERE SHOWN

PART No	STOCK	MATERIAL	SPEC.	LH REQ.	RH REQ.	LH REQ.	RH REQ.	LH REQ.	RH REQ.	LH REQ.	RH REQ.
QS761-6-3											
28B2141-9						1					
28B2141-7							1				
-13	1/32 x 3/4 x 12 1/2	NEOPRENE		1							
-11	.051 x 4 1/2 x 2 3/8	AL ALLOY	QQ-A-355-T	1							
-6	SUB ASS'Y										
#10-2440-9	TYPE A PARKER FITTING			1							
C.V.A.C. FIT 111-4-50	BARRIER 111-1039-1-70			1							
C.V.A.C. FIT 104-4	PARKER FITTING #4 FIG 101-BD			2							
AC 365-D440					1						
AN 442-D4											
AN 425-D3											
AN 940-8					1						
AN 515-04-8					1						
AN 380-836					1						
-16	.051 x 2 1/2 x 2 1/8	AL AL SHT	QQ-A-355-T	1							
-15	COVER FURNISHED	WITH DEVILBIS	#GCS-607	1							
-12	COVER FURNISHED	WITH DEVILBIS	#GCS-607		1						
-10	1/16 x 2 1/16 OD x 1 9/16	NEOPRENE	COMM	1							
-9	.051 x 2 1/8 x 2 1/8	AL AL SHT	QQ-A-355-T	1							
-8	MODIFIED .032 x 5 1/4	M M AL TUBE	44T13	1							
-7	1 QT. FEED CUP	DEVILBIS	GCS-607		1						
-6	SUB-ASS'Y										

PARTS LIST PER ASSY. -0 -2 -3 -4 -5

A.C.		8-8-40	LOC		BNK	
NAVY NONE	NOTED	Thorpe		Drew 11/16/40		R
HEAT TREAT	FINISH	DRAFT	CHECK	STRUCT	MAT.	APPROV.	ENG.

NAME BRACKET-HULL-WINDOW SPRAY CLEANER-LIQUID-CUP

OPP. HAND

DWG. G DIGIT 28B5264

CONSOLIDATED VULTEE AIRCRAFT CORP. SAN DIEGO DIVISION . . . SAN DIEGO, CALIF.

28B5264

LET	ALTERATION	DATE	BY	LET	ALTERATION	DATE	BY

VIEW LOOKING INBOARD
-2 ASSY. ONLY
SCALE 3"=1'-0"
FOR DIMS. NOT SHOWN SEE L.H. ASSY.

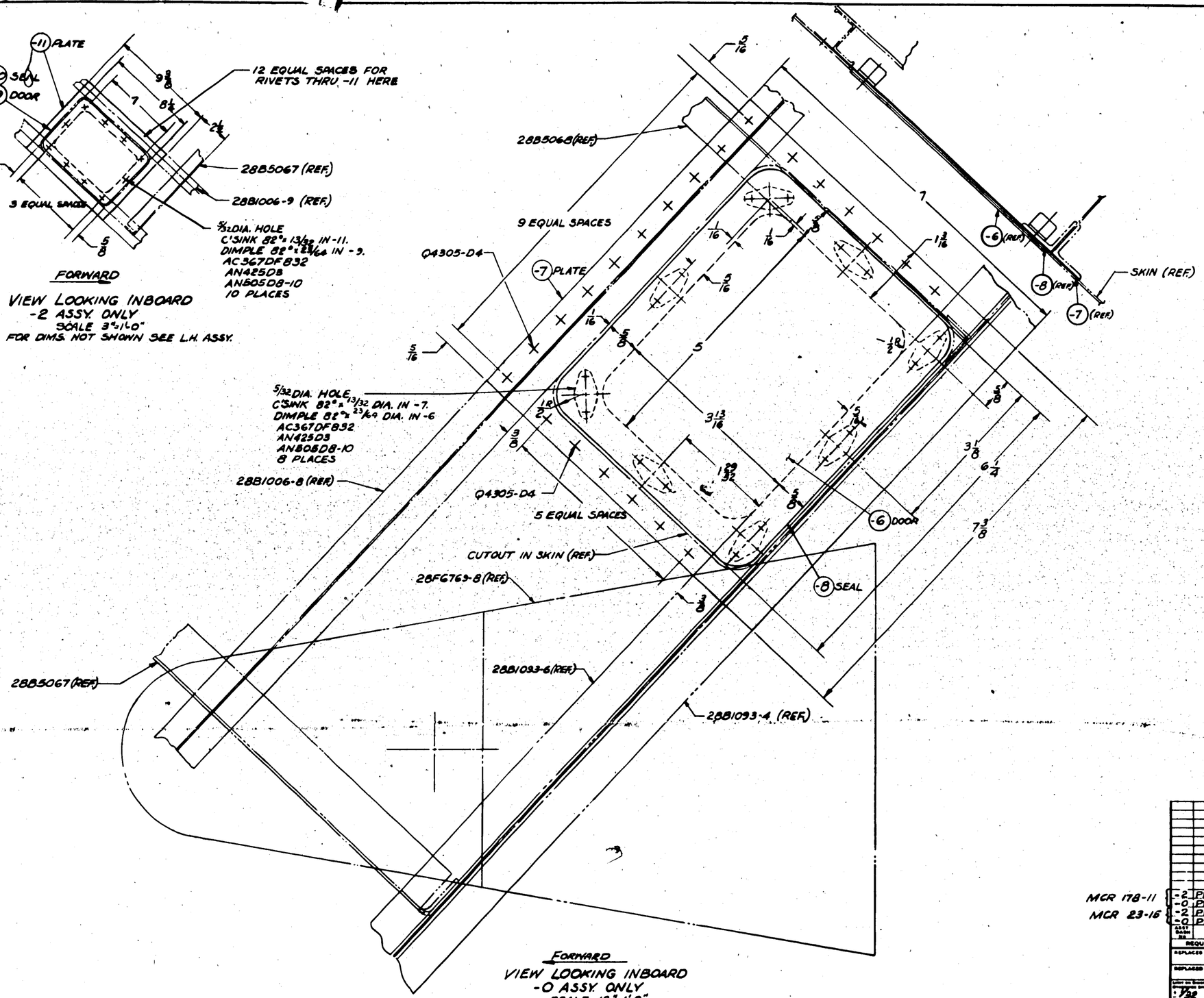

VIEW LOOKING INBOARD
-0 ASSY. ONLY
SCALE 12"=1'-0"

Q4305D4

AN505D8-10										8		10				
AN425D3																
AC367DF832										8		10				

MCR 178-11
MCR 23-16

ASSY SHOW DASH	MODEL	NEXT ASSY	REQ
-2	PBY-5A	28B5076	1
-0	PBY-5A	28B5076	1
-2	PBY-5	28B5076	1
-0	PBY-5	28B5076	1

REQUIREMENTS PER AIRPLANE

REPLACES	-R-35 Scale 3/4"
REPLACED BY	ACT QTY

Unless otherwise specified all dimensions are in inches
DECIMALS ± .010 FRACTIONS ± 1/64
ANGLES ± 1°
BREAK ALL SHARP EDGES .005 TO .015 R MAX UNLESS OTHERWISE SPECIFIED
SCALE NOTED
STAMP PART NUMBER WHERE SHOWN

PART NO	STOCK	MATERIAL	SPEC.	LH REQ	RH REQ	LH REQ	RH REQ	LH REQ	RH REQ	LH REQ	RH REQ
PARTS LIST PER ASSY.				-0		-2		-3		-4	-5
-11	.040x7 1/2 x 9 1/2	ALCLAD	47AQ-T			1					
-10	1/32 x 5 1/2 x 6 1/2	BUTYL RUBBER	AN-A-6			1					
-9	.032 x 5 1/2 x 6 1/2	ALCLAD	47AQ-T			1					
-8	1/32 x 5 1/2 x 7 1/2	BUTYL RUBBER	AN-A-6	1							
-7	.040 x 7 1/2 x 7 1/2	ALCLAD	47AQ-T	1							
-6	.032 x 5 1/2 x 6 1/2	ALCLAD	47AQ-T	1							

A C
NAVY NONE
HEAT TREAT
Z-P-GP
FINISH
STRESS 2-R-49
DRAFT CHECK STRESS MAT APPROV ENG

NAME DOOR-HULL-LOWER FIN-HEATER ACCESS
OPP. HAND
CONSOLIDATED AIRCRAFT CORP. SAN DIEGO, CALIF.
SPEC G
SIZE 28B5275

R

LET	ALTERATION	DATE	BY	LET	ALTERATION	DATE	BY

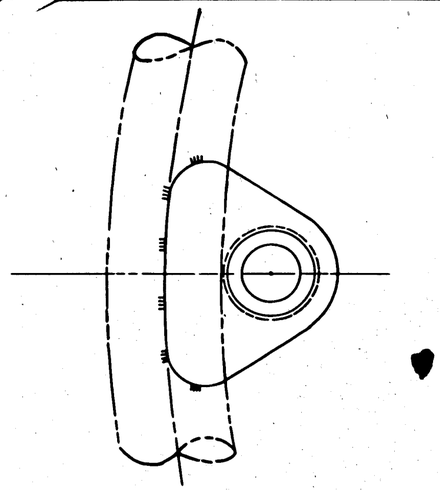

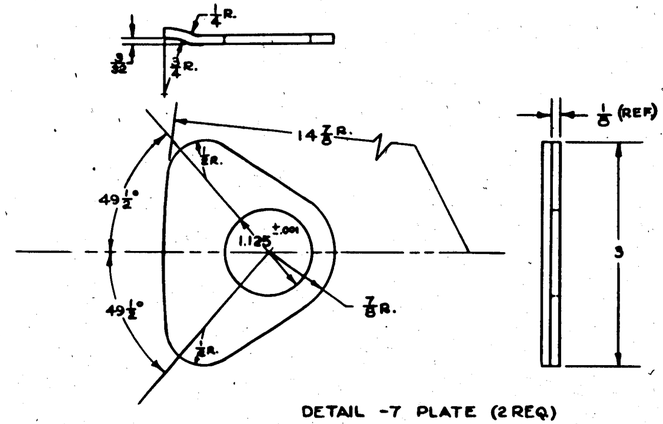

DETAIL -7 PLATE (2 REQ)

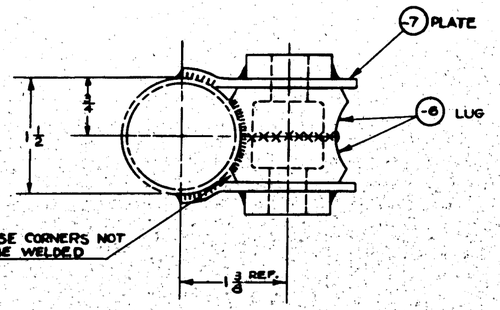

-0 ASSEMBLY

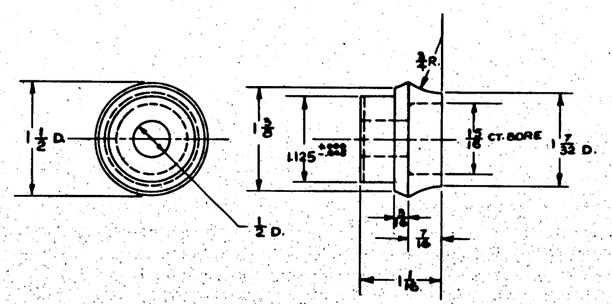

DETAIL -6 LUG (2 REQ.)

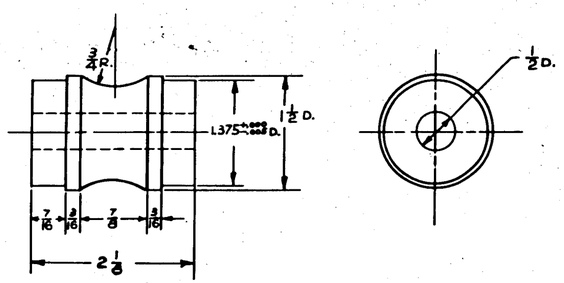

DETAIL -8 LUG

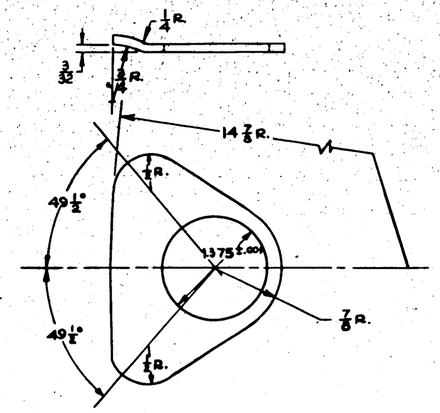

DETAIL -9 PLATE

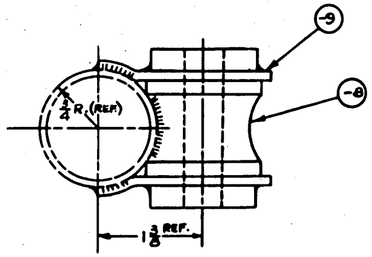

-2 ASSEMBLY

NOTES:
1. NORMALIZE AFTER WELDING.
2. 2885277 -0 & -2 ARE INTERCHANGEABLE ALTERNATES FOR & REPLACE TWO PARTS EACH OF 2885010.
3. THIS PART IS EQUIVALENT TO KELLETT AUTOGIRO CORP DWGS. SK70, SK76, & SK88
▲ 4. -0 & -2 ASSEMBLYS ARE INTERCHANGEABLE

△	PB4Y-2	105P017	32
△	28-5AMN	2885000	16
△	28-5MN	2885000	16
△	28-5MC	2885000	16
△	28-5MA	2885000	16
△	28-5MK	2885000	16
△	B24E	3281500	32
△	B24D	3281500	32
△	28-5AMC	2885000	16
△	B24E	3281000	32
△	PB2Y3	2883000	32
△	B24D	3261000	32
△	LB30	6885000	32
△	B24C	3281000	32
△	XB24	3261000	32
△	PBY-5B	2885000	16
△	PBY-5A	2885000	16
△	B24A	2885000	32
△	PBY-5	2885000	16
ASSY DASH NO.	MODEL	NEXT ASSY	USE

REQUIREMENTS PER AIRPLANE

REPLACES	
REPLACED BY	

ACT WT

UNLESS OTHERWISE SPECIFIED DIMENSIONS ARE IN INCHES	SCALE 12" = 1'0"
± 1/32	
STAMP PART NUMBER WHERE SHOWN	

PART No	STOCK	MATERIAL	SPEC	LH REQ	RH REQ	LH REQ	RH REQ	LH REQ	RH REQ	LH REQ	RH REQ
PARTS LIST PER ASSY				-0		-2		-3		-4	-5
-0	.185 x 2 3/8 x 3 1/8		AN-QQ-A-250/5								2
-6	1 7/8 x 2 3/4		MIL-QQ-A-250/4								1
-7	.185 x 2 3/8 x 3 1/8		AN-QQ-A-250/5	1							
-8	1 1/2 x 1 3/16		MIL-QQ-A-250/4	1							

A/C NOTED	C.V.A.C. ZF-32-001				
NAVY NOTED	C.R. 26P	3-19-43			
HEAT TREAT	FINISH	DRAFT	CHECK	ENGINEER	MAT

NAME LUG - ASS'Y - P.R. ENGINE MOUNT RING

CONSOLIDATED AIRCRAFT CORP. San Diego, Calif.

OPP HAND

SIZE G — DWG NO. 28B5277

R

2885277

LET	ALTERATION	DATE	BY	LET	ALTERATION	DATE	BY

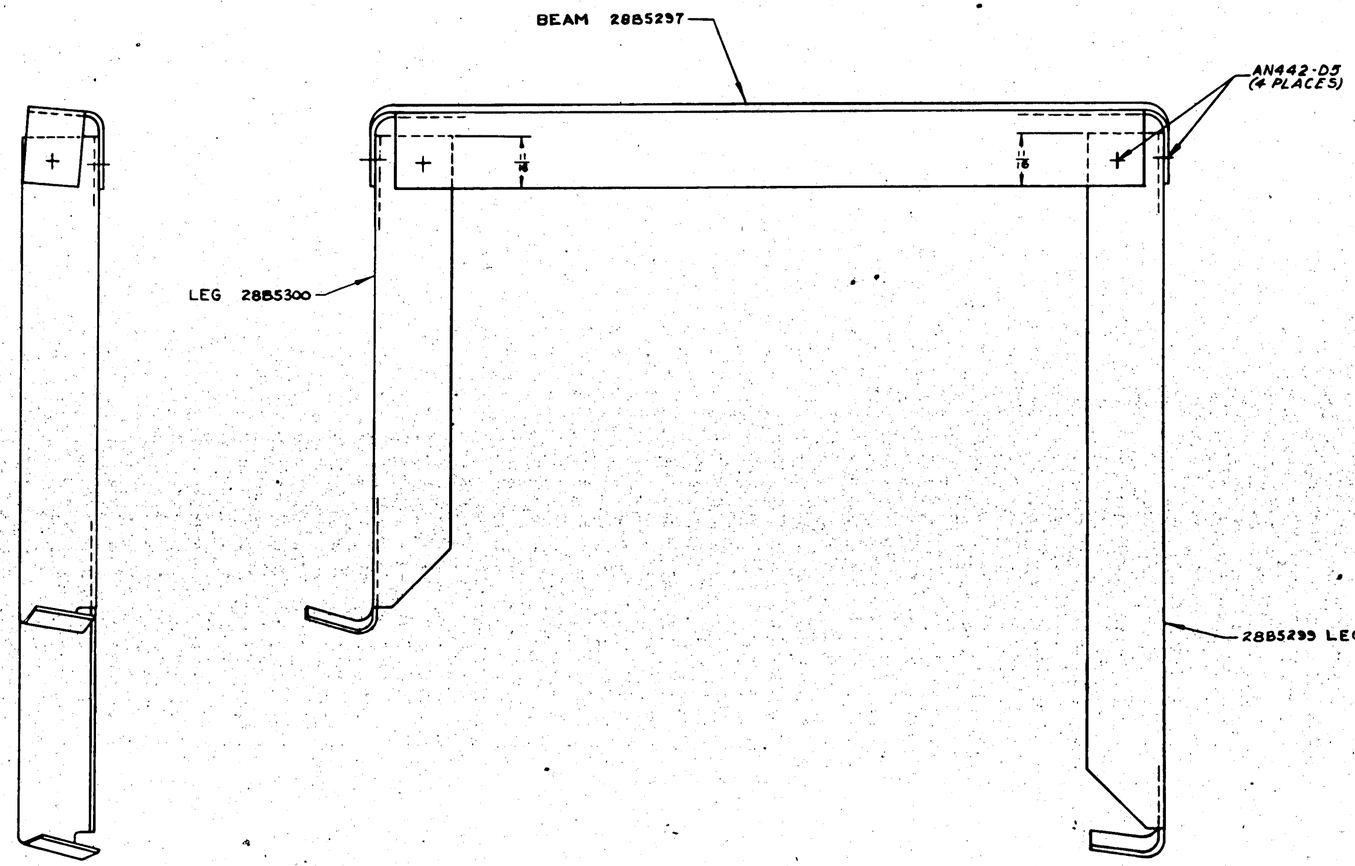

MCR 198A & ON
MCR 111A & ON

APPROVED FOR TOOLING BY
E. E. Dalton
6-28-43

ARMY SAEN NO.	MODEL	NEXT ASSY	NOS.
	PBY-5A	28B5279 △	28B5300
	PBY-5	28B5279 △	28B5299
			28B5297

REQUIREMENTS PER AIRPLANE

REPLACES — .33 SCALE WT.

REPLACED BY — ASY. WT.

LIST ON DRAWING UNLESS OTHERWISE SPECIFIED: YES

SCALE 12"-1'0"

STAMP PART NUMBER WHERE SHOWN

AN442D5

PART NO	STOCK	MATERIAL	SPEC.	LH REQ. -0	RH REQ. -2	LH REQ. -3	RH REQ. -4	LH REQ.	RH REQ. -5
		PARTS LIST PER ASSY.							

A C
NAVY NONE
HEAT TREAT

2-P-G P
FINISH

DRAFT: BUNDE 6-28-43
CHECK
STRUCT
MAT
ASSY
ENG

NAME FRONT SUPPORT ASSEM-
AMMUNITION CHUTE STEP

OPP. HAND NONE

DWG. G
SIZE

28B5298

CONSOLIDATED AIRCRAFT CORP. SAN DIEGO, CALIF.

R 28B5298

LET	ALTERATION	DATE	BY
A	CHANGED DIMENSIONS TO AGREE WITH CUTTING OF DWG. No. WTG. CHANGE.	7-25-41	

LET	ALTERATION	DATE	BY

CHANGE FORGING PART NO. 28B5511 TO 28B5515

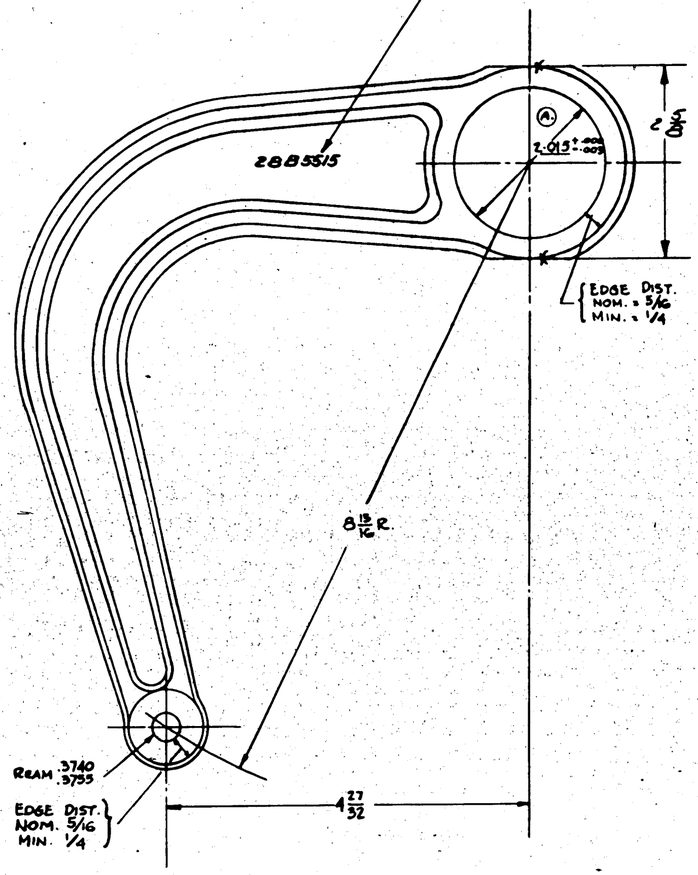

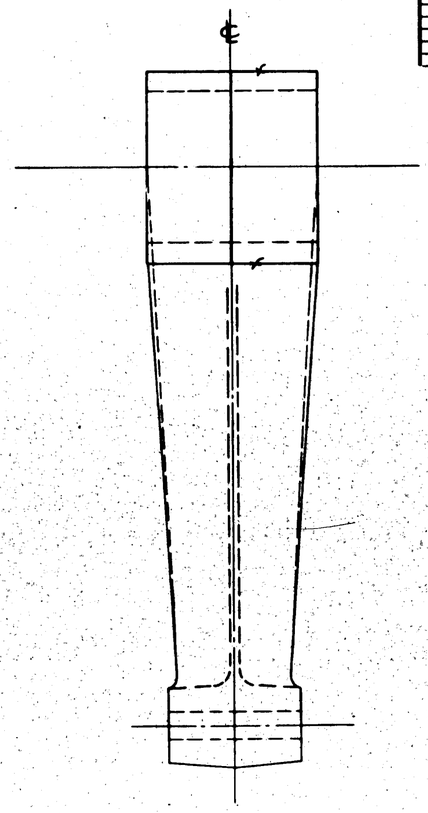

FINISH CODE	
Z	ANODIC TREATMENT
P	P-37 PRIMER
AP	ALUMINIZED PRIMER
C	CADMIUM PLATE

ARMY-I	28B5510	E
NAVY	28B5510	E
PSY. SA	28B5510	E

ARMY DWG. No.	MODEL	NEXT ASSY	No.

REQUIREMENTS PER AIRPLANE

REPLACES	2.5 Ship Wt
REPLACED BY	Assy Wt
Layout on Engineering Drawing Drawing Scale	SCALE 12" = 1'-0"
STOCK PART NUMBER WHERE SHOWN	

PART No	STOCK	MATERIAL	SPEC.	LH REQ.	RH REQ.	LH REQ.	RH REQ.	LH REQ.	RH REQ.	LH REQ.	RH REQ.
28B5511				1							
PARTS LIST PER ASSY.				-0	-2	-3	-4	-5			

A.C.		Engineer	Chief	9-10-41			
NAVY		Lab		9-13-41		9-26-41	
HEAT TREAT	FINISH	DRAFT	CHECK	STRUCT	STAT	APPROV	ENG

NAME ARM-HULL-NOSE DOOR-OPERATING

CONSOLIDATED AIRCRAFT CORP. San Diego Calif.

OPP HAND NONE

DWG G 28B5515

SIZE R

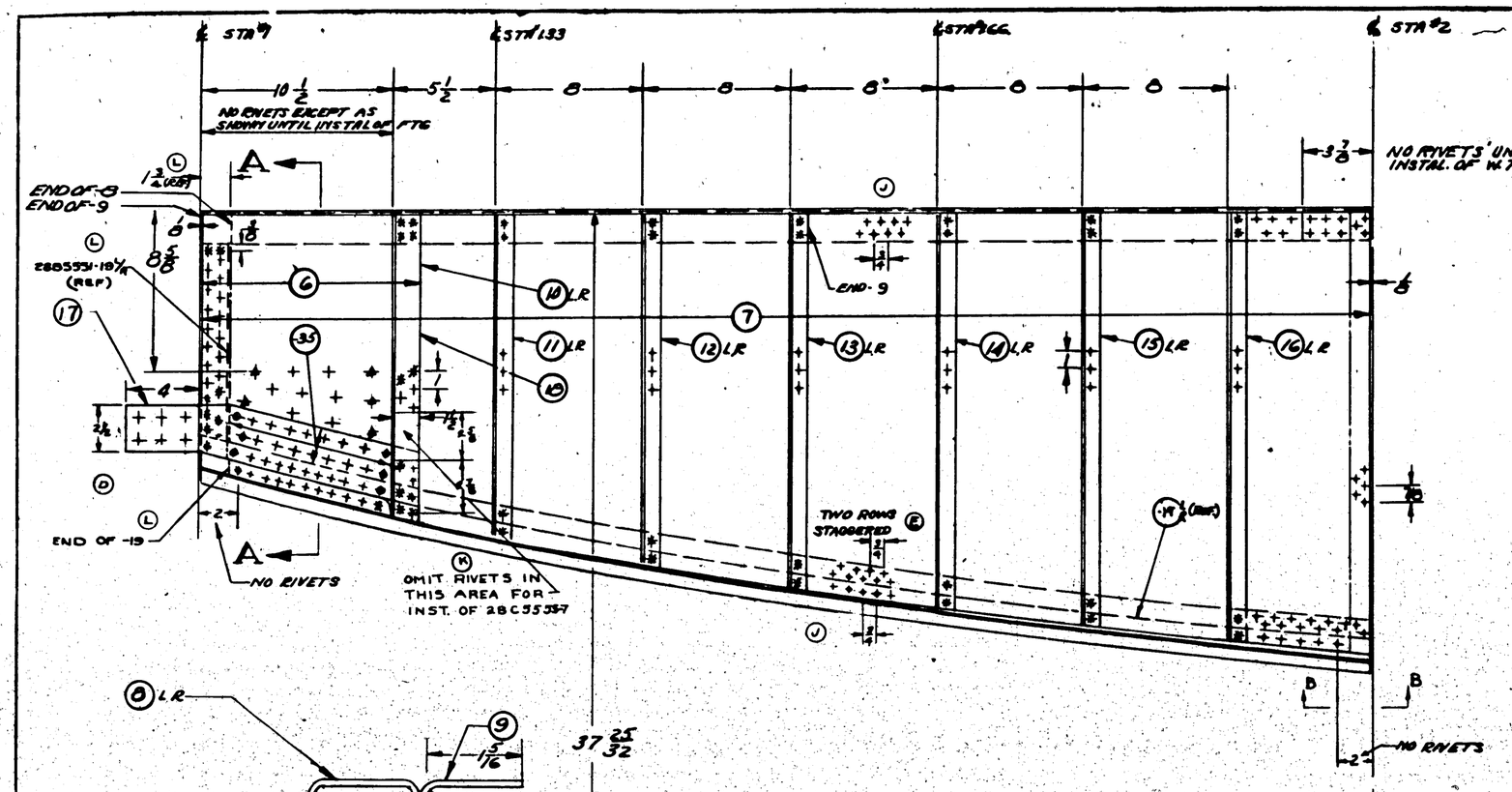

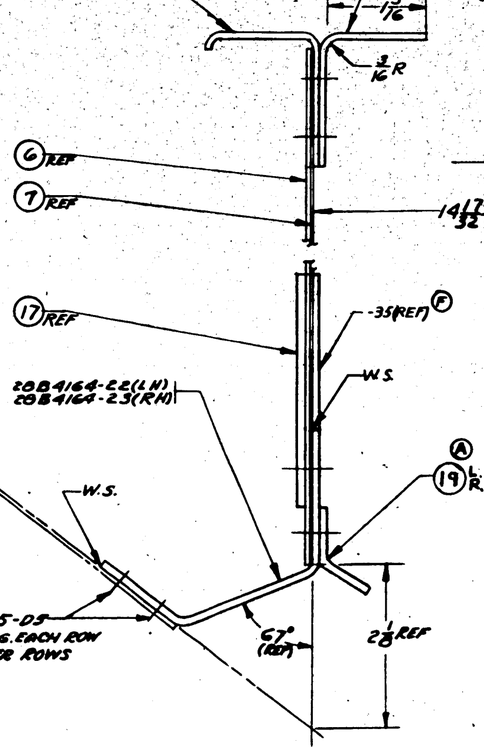

SECTION A-A
FULL SIZE

OUTBOARD SIDE SHOWN

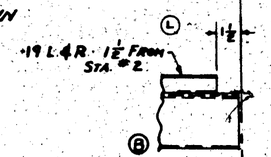

VIEW B-B

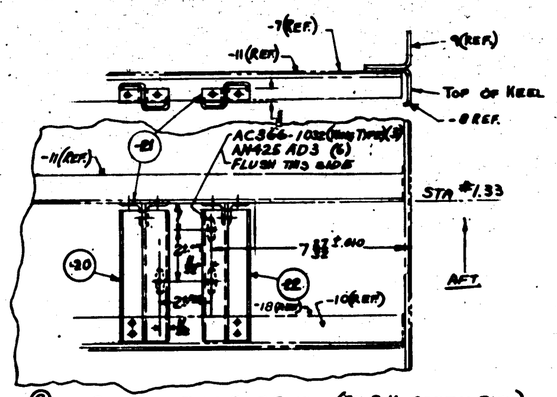

© OUTBOARD SIDE SIDE SHOWN (ON R.H. ASSEM. ONLY)

⑥

FINISH AL ALLOY DETAILS - Z-P-1-C-D AFTER ASSY APPLY 1 AP

INSULATE DISSIMILAR METALS WITH 1/64 DUPRENE OR EQUIV

H.T. -17-150,000 PSI

+	RIVETS
⊕	- 1/8
⊕	- 1/4
⊕	- 3/32
⊕	- 5/16
⊕	- 3/8

E.O. 28508 REV-EA, GAU-1, EB-6ANC

GAU-1, E.O. 28550 REV-EA, EB-6ANC.
REVISED E.O. 31161 EB-6ANC, GAU-1

E.O. - 7443 (GO SAME REV-2A)

E.O. - A18809

E.O. A18809

E.O. A18809

LET	ALTERATION	DATE	BY
A	CHANGE [illegible] -19 L.R.		
	[illegible] -19 L.R.		
	ADDED NOTE: "Outer Runner A"		
	L.R. (IN TAIL INSTALL 5 CHANGE MAT'L		
B	CUT OFF 1/8 AT END OF -19 L.R. ADDED NOTE	8-6-52	KEA
C	ADDED 1/4" DIA HOLE ADDED NOTE	8-26-52	KEA
D	REVISED ARRGMT. ONLY AS SHOWN	4-[illegible]-53	
	ADDED NOTE "DO NOT RIVET"		
E	RIVET PATTERN CHANGED WAS 1 ROW IN -19 L.R.	5-11-53	KEA
F	ADDED -35 (BLIND) - CALC. WT. 14.5 LBS WAS 14.5 LBS	5-26-53	KEA
G	ADDED NOTE: "DO NOT RIVET-- --APPLY WHEEL DOOR" NO WT. CHG.	5-29-53	KEA
H	CHG'D COND. OF MAT'L FOR -19 L.R.	5-29-53	KEA

LET	ALTERATION	DATE	BY
	NO. WT CHG.	5-29-53	KEA
J	RIVET PATTERN SYM ADDED WAS [illegible]	5-29-53	KEA
	WT. CHG. NIL	5-29-53	KEA
K	REMOVED 4 RIVET INDICATIONS	7-2-53	KEA
	ADDED DIMS. 2 3/8 & 2 7/8		
	ADDED NOTE "OMIT RIVETS-8" AND (REF) WAS [illegible]	7-2-53	KEA
L	REVISED WAVY LINE SET-UP IN DWG.		
	ADDED 2885551-19 1/4 (REF)		
	DWGS. 2885551-19 1/4 & 2885357		
	ADDED NOTES "2885551-19 1/4 (REF) & "END OF -19" AT VIEW "B-B" DIM. 17/8 WAS 1 3/4 & NOTE "-19 L.R. 1/2 FROM STA. 2" WAS "-19 L.R. 1 1/8 — STA. 1" WT. CHG. NIL	7-29-53	KEA

FINISH. CO.

Z	ANODIC TREATMENT
P	P-37 PRIMER
AP	ALUMINIZED PRIMED
C	CHROMATE PLATE

PART NO.	STOCK	MATERIAL	SPEC.	PARTS LIST PER ASSY.				
				REQ'D	REQ.	REQ.	REQ.	REQ.
				-0	-3	-5	-4	-5
	AN425AD3							
	AC366-1032							
	AN442-06							
	AN442-06							
	AN442-05							
	AN442-06							
	94305-05							
-22	Y564AD3-5 3/16	5/16 DIA 24ST	4 7AB-T					
-21	K1524-2	AL ALLOY	4 6A9-T					
	20B4164-22							
	20B4164-23							
-20	Y564AD3-5 3/16	ALCLAD 24ST	4 7AB-T					
-18	K1523 x 62 3/16	AL. ALLOY	4 6A9-A					
-11	R1827-2-62 3/16	AL. ALLOY	4 6A9-A					
	1/32 x 1 1/2 x 14	ALCLAD	4 7A9T					
	1/32 x 1 1/2 x 12	CHR. MOL. ST.	4 215A					
	1/64 x 1 1/2 x 24	DURAL	4 6A9T					
	1/64 x 1 1/2 x 22							
	1/64 x 1 1/2 x 21							
	1/64 x 1 1/2 x 23							
	1/64 x 1 1/2 x 25							
	1/64 x 1 1/2 x 26							
	1/64 x 1 1/2 x 27							
	1/64 x 1 1/2 x 24							
	1/64 x 1 1/2 x 28							
	1/64 x 1 1/2 x 29							
	1/64 x 1 1/2 x 30							
	1/64 x 1 1/2 x 19							
	1/64 x 1 1/2 x 18	DURAL	4 6A9T					
	1/64 x 1 1/2 x 17							
	1/64 x 1 1/2 x 17							
-7	1/32 x 3/4 x 3 3/4	ALCLAD	4 7A9T					
-6	1/32 x 3/4 x 3 1/4	ALCLAD	4 7A9T					

R	28-6 AMN	1	
L	28-6 AMN	1	
	28 SERIES		
	28 SERIES		
R	PARKER	2885522	1
L	PARKER	2885552	1

MODEL	PART NO.	NEXT ASSY	REQ.

REQUIREMENTS FOR SIMILAR

REPLACED	44-73
REPLACED BY	
ENGR. RELEASE	
SCALE	3"=1'-0"
DRAWN	
TRACED	
CHECKED	

A.R.			4/4/52	LOC
ENGR'G APPR.	NOTED	NOTED	7/16/52	
SHOP APPR.		FINISH		

CHKD. 5/4/53 APP'D 5/4/53

NAME TWIN KEEL - HULL - STA #1-#2

CONSOLIDATED AIRCRAFT CORP.

OPP. HAN 28B5521-LA

DWG. NO. G 28B5521

SIZE

28B5521

LET	ALTERATION	DATE	BY
E	TRACED NO. WT. CHG	8-5-43	DAC
F	28B5131-2-(4) WAS 28B5154-2 (8) ADDED 28B5151-5-(4) WT. CHG. NEG.	8-5-43	DAC

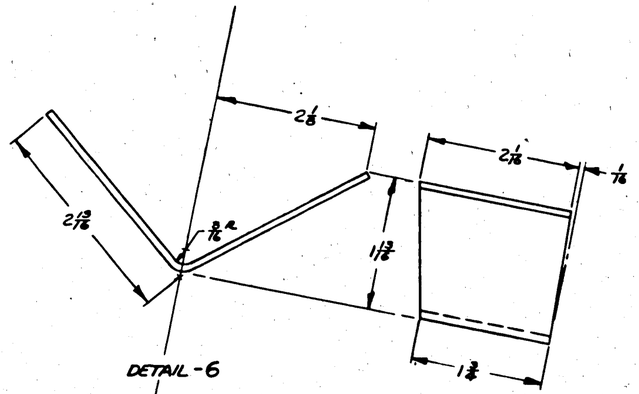

DETAIL-6

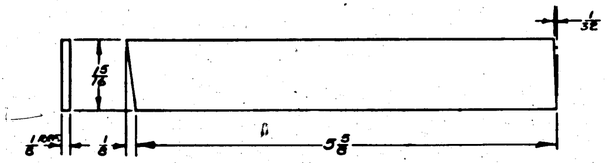

DETAIL-7

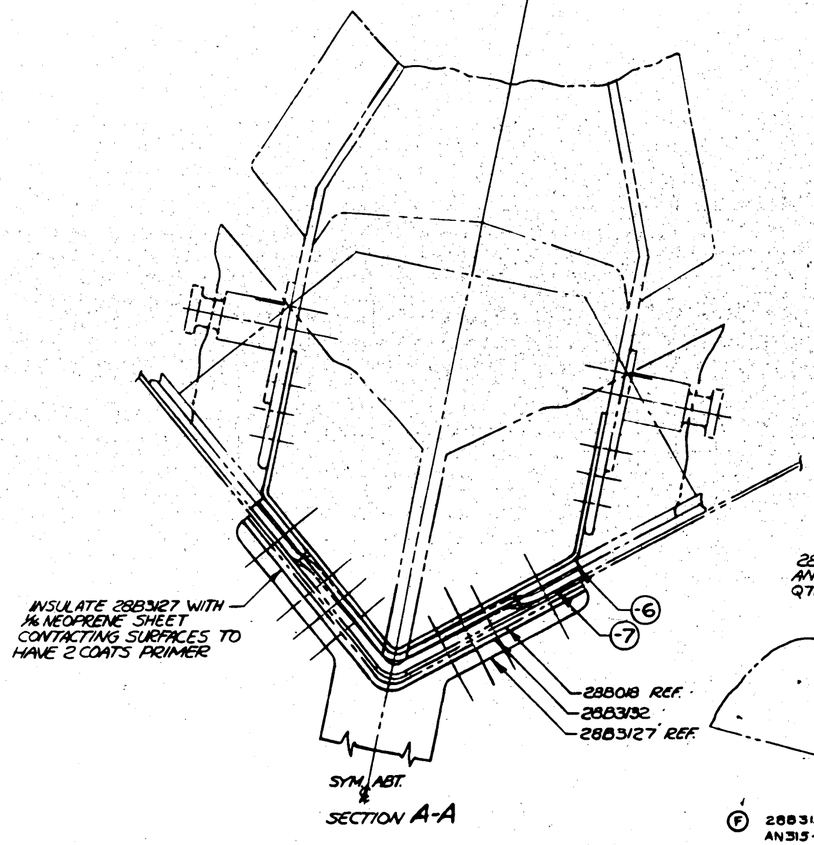

SECTION A-A

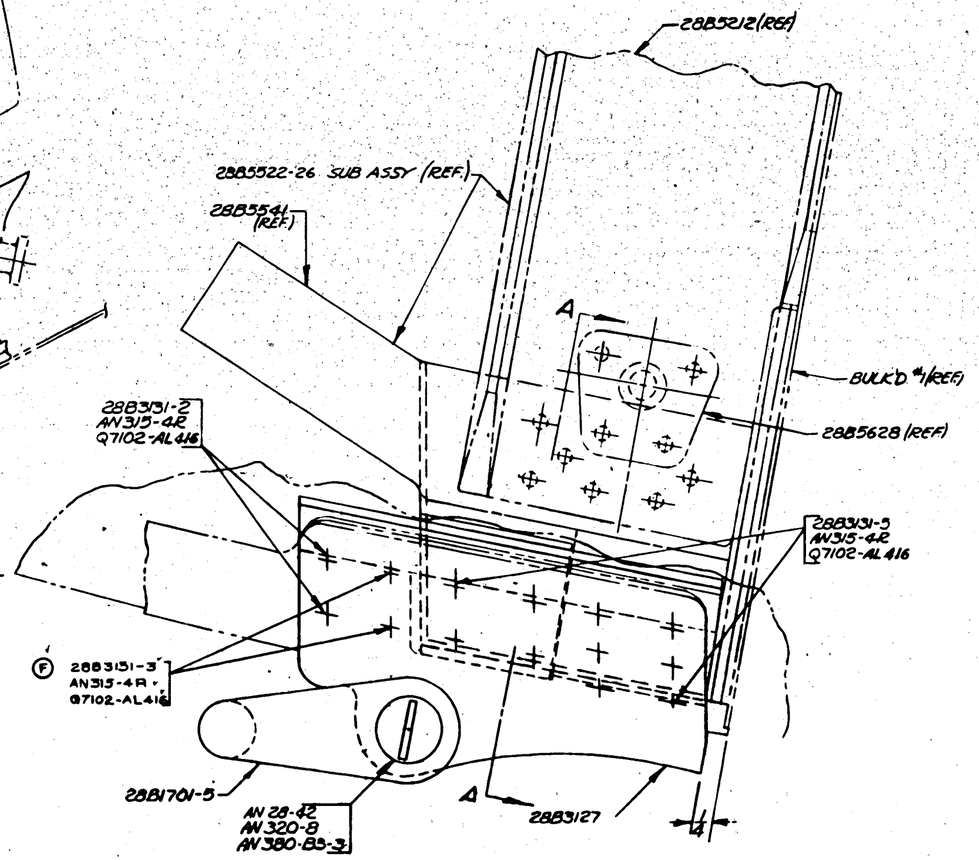

NOTE:
INSULATE ALL DISSIMILAR MAT'LS WITH NEOPRENE SHEET CONTACTING SURFACES TO HAVE 2 COATS PRIMER FINISH -6 C-7 Z-P-GP
STAKE ALL 28B3131 BOLTS IN THREE PLACES EACH BOLT

FINISH CODE	
Z	ANODIC TREATMENT
P	P-27 PRIMER
GP	GREEN PRIMER
C	CADMIUM PLATE

PART No	STOCK	MATERIAL	SPEC.	-0 REQ.	-2 REQ.	-3 REQ.	-4 REQ.	-5 REQ.
	PARTS LIST PER ASSY.							
-7	1/16 SH 1/8 x 5 1/8	ALCLAD	67A8A					
-8	C93 x 2 1/4 x 6	ALCLAD	67A8A					
	Q7102-AL416					28		
	AN380-83-3					1		
	AN 320-8					28		
	AN 315-4R					1		
	AN 28-42					1		
	28B3131-3					4		
	P.R. WASHER					4		
	28B3131-2					20		
	28B3131-5					4		
	28B3131-4					1		
	28B1701-5					1		

ABT SHEET NO.	MODEL	NEXT ASSY	REQ.
03-34WW	28B3500	/	
03-WC	28B3500	/	
ABY-34	28B3500	/	

REQUIREMENTS PER AIRPLANE
REPLACES: 03 Calc. Wt.
REPLACED BY: Act. Wt.
USED ON ASSEMBLY SHOWN: X
DRAWN: 12"=1'-0"

AC		Checked DATE						
NAVY NONE	NOTED	4/5/43	LAC		4/6/43	4/6/43		
HEAT TREAT	FINISH	DRAFT	CHECK	STRUCT	MAT	APPROV	ENG.	

NAME INSTALLATION - HULL MOORING & TOWING FITTING
CONSOLIDATED AIRCRAFT CORP. San Diego, Calif.
GRP. NUMB.
SIZE G
DWG. 28B5540

28B5540
R

E.O. 29681
E.O. 30468

LET	ALTERATION	DATE	BY	LET	ALTERATION	DATE	BY
A	3/32 HOLES ETC - WAS ALL HOLES 3/32 DRILL	11-13-40	GRAY				
B	1 31/32 WAS 1 15/16 ; 1 1/4 WAS 1 1/2	1-17-41	ARAC				
C	NEXT ASSY 28B5522 WAS 28B5540	6-6-41	STANBERRY				

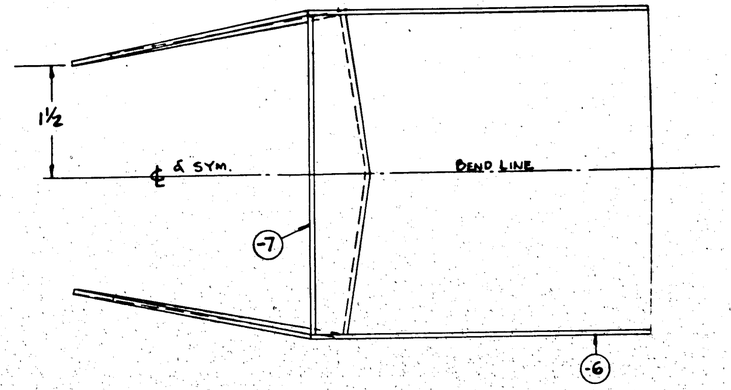

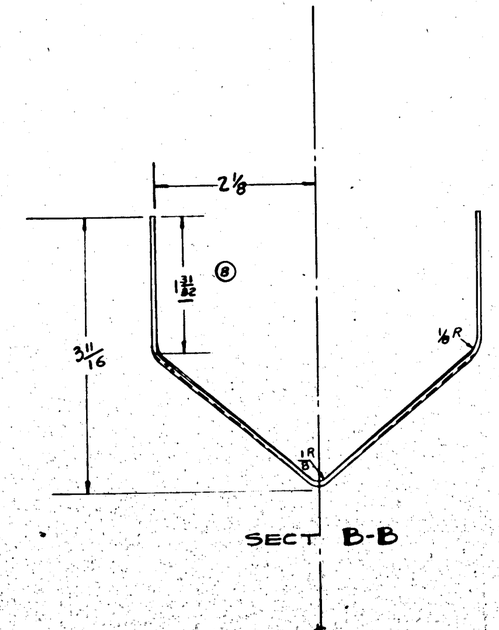

SECT B-B

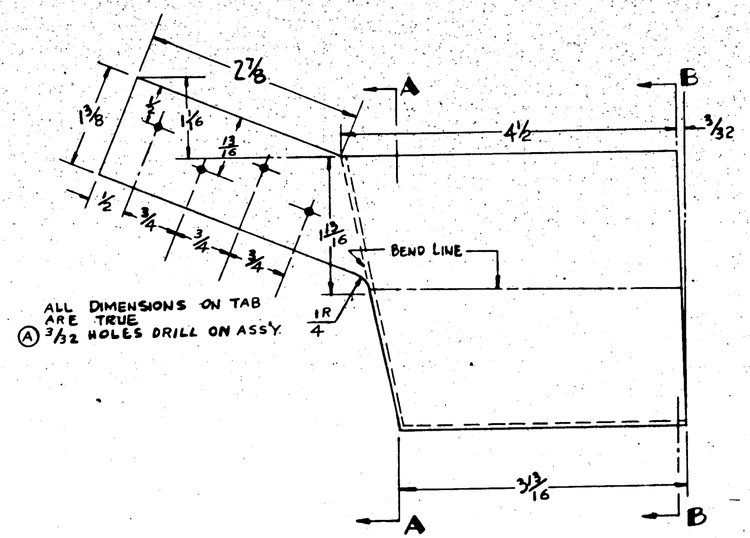

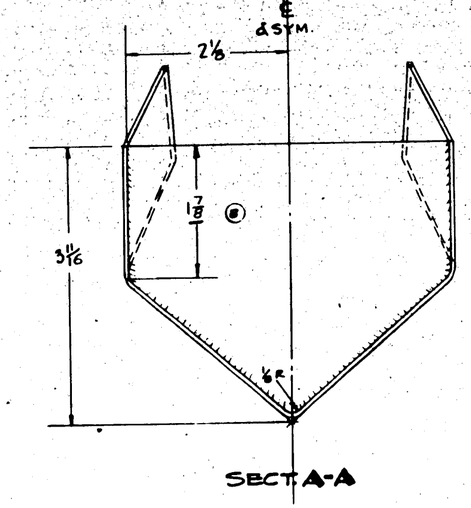

SECT A-A

NOTE:
WELD ON INSIDE ONLY

FINISH: SAND BLAST, CADMIUN PLATE, P27 PRIMER, 2 ALUMINIZED PRIMER

0	28-5AMM	28B5582	1
0	5AU-1	28B5521	1
0	28-5AMC	28B5532	1
0	PBY 5A	28B5522	1

ASSY DASH NO.	MODEL	NEXT ASSY	REQ.

REQUIREMENTS PER AIRPLANE

REPLACES ·35⁵ ONLY QTY

REPLACED BY ASY. QTY

LIMIT OF DIMENSIONS SHOWN ARE ± 1/32 — SCALE 12" = 1'-0"

STAMP PART NUMBER WHERE SHOWN

PART No	STOCK	MATERIAL	SPEC.	LH REQ.	RH REQ.	LH REQ.	RH REQ.	LH REQ.	RH REQ.	LH REQ.	RH REQ.
-7	.063 x 4 x 4 1/2	C.M. STEEL	47514	1							
-6	.063 x 8 x 12	C.M. STEEL	47514	1							

PARTS LIST PER ASSY. -0 -2 -3 -4 -5

AC			M.W.			WPZ	
NAVY 125,000 T.S.	SB-C-P-2AP	9/14/40	LOC		9/16/40		
HEAT TREAT	FINISH	DRAFT	CHECK	STRUCT	MAT	APPROV	ENG

NAME: GUSSET - HULL MOORING & TOWING FITTING

OPP. HAND —

CONSOLIDATED AIRCRAFT CORP. SAN DIEGO, CALIF.

DWG. G

SIZE 28B5541

R

LET	ALTERATION	DATE	BY
	TO BE DETERMINED BY DRGS ON ASG 288870; MEA WT. CHG.	3-25-42	Tinkler
J	REMOVED (1) .133 DIA HOLE ADDED (1) .128 DIA HOLE & NOTE	3-27-42	[illegible]
K	1/4 R WAS 1/16 R, NO WT. CHG	5-14-42	EMC
L	REM'D 7/8 DIM. & EXTENDED WELD TO CENTER OF BEAM	6-16-42	EMC
	WT. CHG. MEA.		
M	CHGD 3/4 DIM. ARROW FROM OUTSIDE OF -7 TO INSIDE. ADDED VIEW OF NEW 11/16 DIA. HOLES (2) (7/8, 1 1/8 & 7.50 & .005 LOCATING DIMS. & NOTE "J16 LOCATE ——— ETC." YYY. CHG MEA.	7-10-42	[illegible]
N	REMOVED "WELDED ASSY - 6" NO WT. CHG.	7-15-42	[illegible]
P	5/16 R WAS 1/4 R NO WT. CHG	7-14-42	[illegible]

E.O. A36820

INC. BY AERO. CHANGE #35 PBY-5A

E.O. A49185

LET	ALTERATION	DATE	BY
M	WAS "DRILL ± 0 RIV" [illegible]	3-5-42	[illegible]
	[illegible]	3-5-42	[illegible]
	[illegible]		
	[illegible]		
	[illegible]		
	[illegible]		
	[illegible]		
	[illegible]		
C.M.	[illegible]		
A.J.	ADDED "-7" TO ASS'Y	4-6-42	[illegible]
E	ADDED DIMENSIONS FOR PLACEMENT OF HOLES IN FLANGE	5-14-42	[illegible]
P	REMOVED .161 ± .010 (.151 .171) HOLES FROM PER OF DWG	7-14-42	[illegible]
Q	CHANGED SIZE (1) .128 DIA. HOLE & NOTE "DRILL 1/4 HOLES ON ASS'Y" WAS "DRILL 5/16 HOLES ON ASS'Y"	7-15-42	[illegible]
N	2 PLACES ADDED NOTE ".128 DIA HOLES LOCATION OF HOLES [illegible]"		

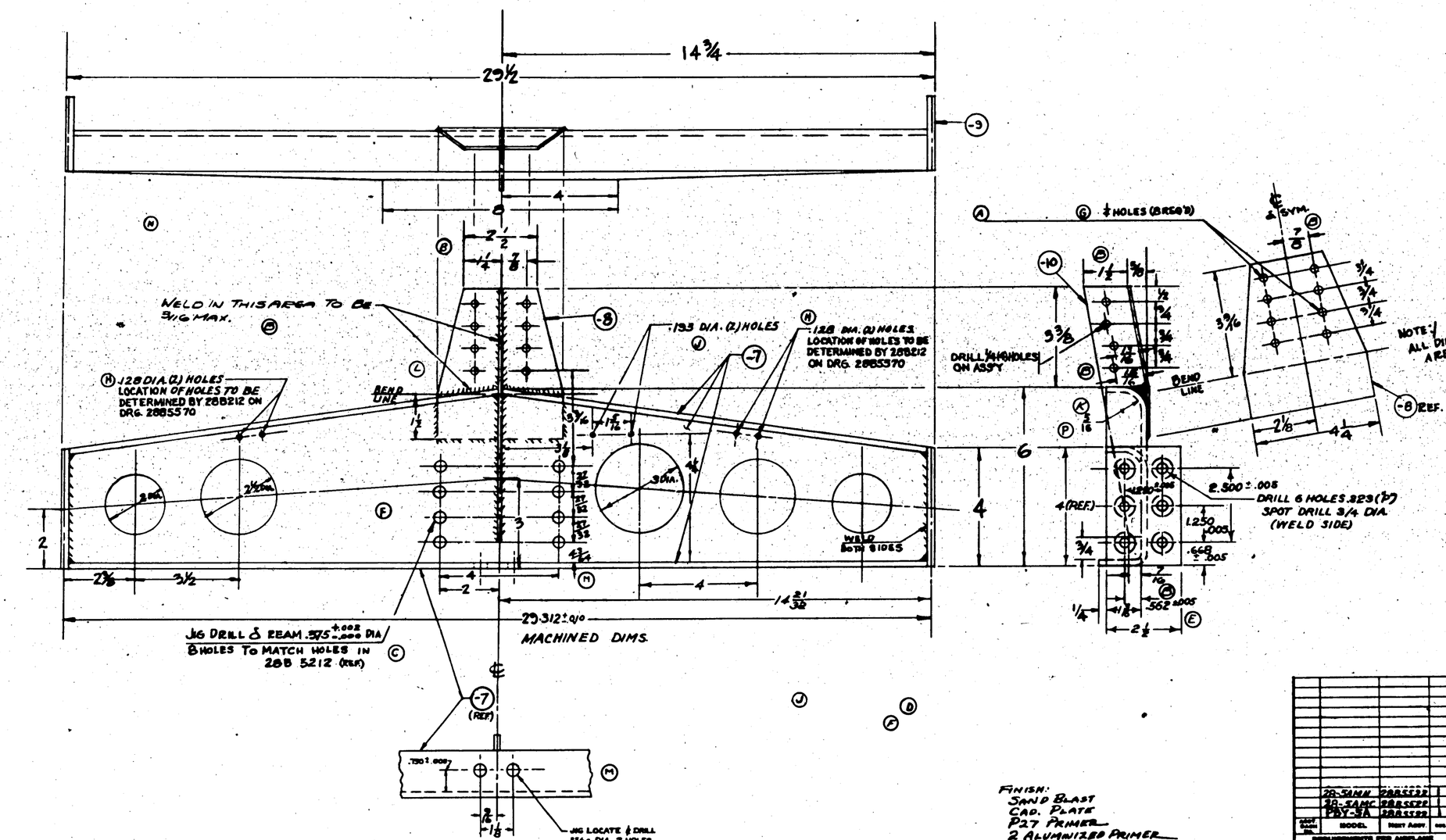

FINISH:
SAND BLAST
CAD. PLATE
P27 PRIMER
2 ALUMINIZED PRIMER

PART NO.	STOCK	MATERIAL	SPEC.	LH REQ.	LH REQ.	RH REQ.	RH REQ.
-10	.064 x 1 1/2 x 9	C.R. STEEL	47B 14	1			
-9	1/8 x 3 1/4 x 12			1			
-8	.064 x 4 1/2 x 12			1			
-7	.187 x 3 x 7.50	C.R. STEEL	47B 14			1	

PARTS LIST PER ASSY. -0 -2 -3 -4 -5

BODY PLANT NO.	MODEL	NEXT ASSY	NOS.
	28-5AMH	CROSSED	
	28-5AMC	CROSSED	
	PBY-5A	CROSSED	

REQUIREMENTS PER AIRPLANE
REPLACED: 11-5-42
REPLACED BY:

SCALE	DRAWN BY
1/32	G = 1'-0"

STAMP PART NUMBER WHERE SHOWN

A.C. ——— ——— ——— ———
NAVY 175.000 PSI | 5B-C-P-2AP | 9/24/42 | [illegible]
HEAT TREAT | FINISH | DRAFT | DESIGN | TRACED | STAT | APPROV | DATE

NAME CROSS BEAM - HULL BULK'D. #1
CONSOLIDATED AIRCRAFT CORP., San Diego, Calif.

DRG. NO. G 28B5542

28B5542

R

LET	ALTERATION	DATE	BY
A	ADDED AN442-06 TO BM 1 FACE OF DRAWING		
B	CUT OFF TOP FLANGE OF -6 TO 45° WT SHO. MEA	3/13/44	HUNT

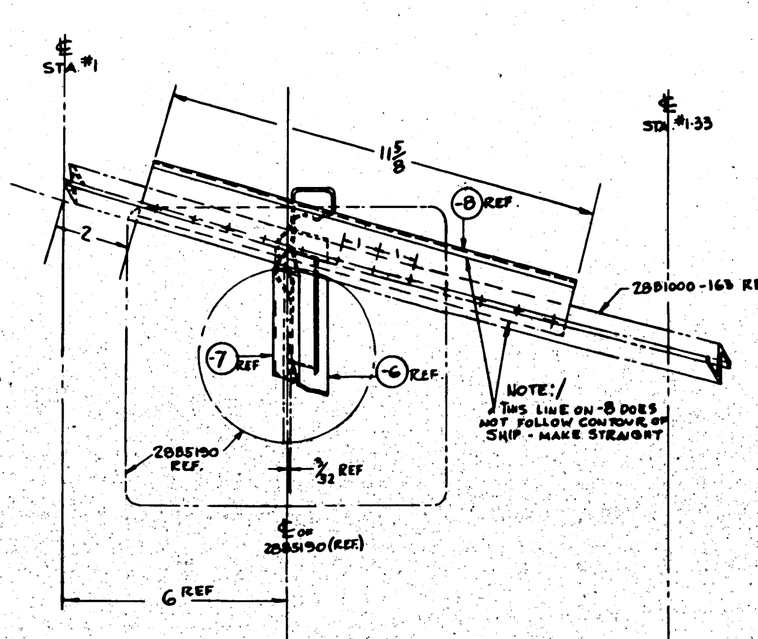

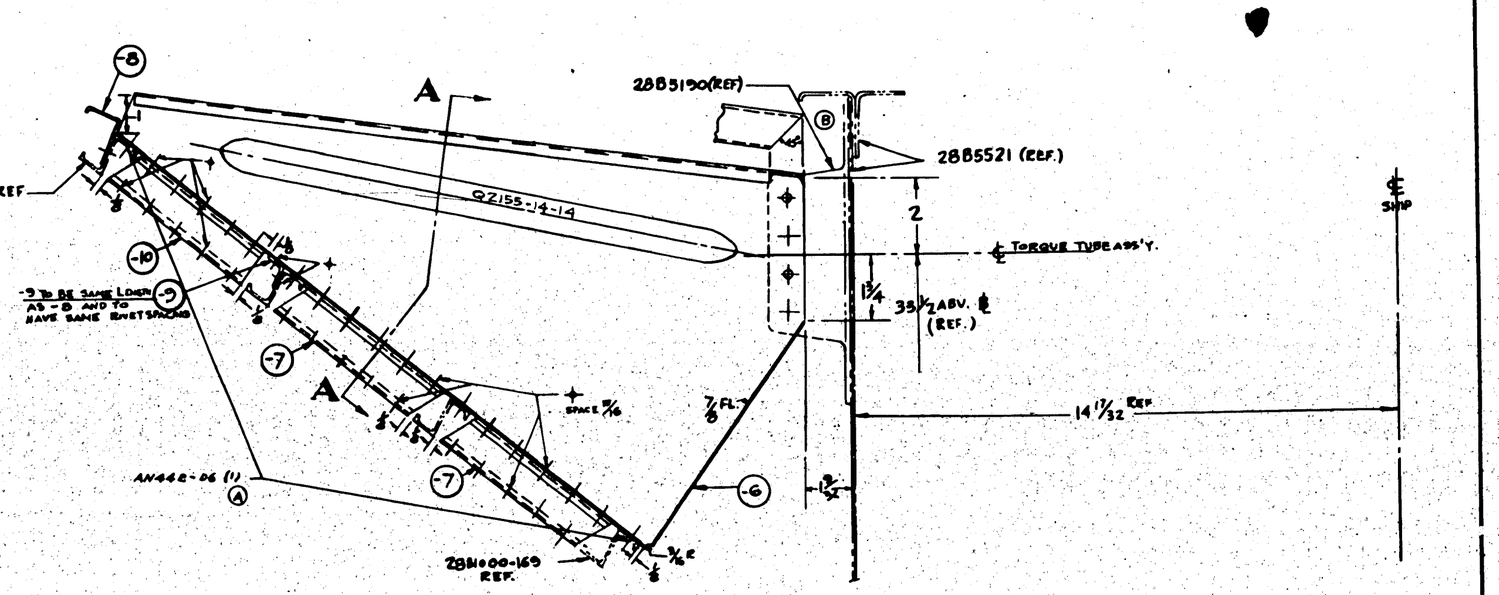

VIEW - LOOKING FWD.
L.H. ONLY

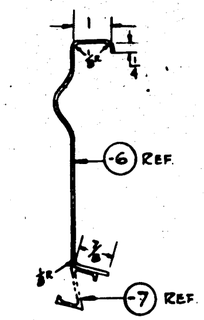

SECTION A-A

NOTE :/
ALL RIVETS AN442-0 EXCEPT AS NOTED
FOR CONTOUR SEE 288003
FOR STENGER LOCATIONS SEE 2881007

+ = RIVETS	(SIZE INDICATED AT INTERSECTION OF THE FOLLOWING LINES)		
✣ = 1/8	✥ = 5/32	✳ = 3/16	
⊕ = 1/4	⧺ = 5/16	⊛ = 3/8	

FINISH CODE	
Z	ANODIC TREATMENT
P	P-27 PRIMER
AP	ALUMINIZED PRIMER
C	CADMIUM PLATE

ASSY DASH NO.	MODEL	NEXT ASSY	QTY
	28SAMW	2885522	1
	28SAMC	2885523	1
	P8Y-5A	2885524	1

REQUIREMENTS PER AIRPLANE: 1 SET

REPLACES

REPLACED BY

LIMIT OF DIMENSIONS SHOWN ARE FOR FINISHED CONDITION: 1/32

SCALE: 6" = 1'-0"

STAMP PART NUMBER WHERE SHOWN

PART No	STOCK	MATERIAL	SPEC.	LH REQ.	RH REQ.	LH REQ.	RH REQ.	LH REQ.	RH REQ.
PARTS LIST PER ASSY.				-10	-9	-8	-7	-6	
-10	K9047-4-5A	EXTRU	4GA3	1					
-9	K58764-1/8A	EXTRU	4GA3		1				
-8	VS-A43-11/8					1			
-7	K9047-5-5A	EXTRU	4GA3				1		
-6	.064 x 14 x 20	ALCLAD	4/18					2	2

AC
NAVY SRS9-T — HEAT TREAT
Z-P-AP — FINISH
LOG CHECK 10/4/44 — DRAFT
CHECK — STRUCT — MAT. — AERO — ENG
NAME BRACKET-HULL-SIDE THRUST NOSE WHEEL
CONSOLIDATED AIRCRAFT CORP. San Diego, Calif.
DWG NUMBER
SIZE G
28B5547

LET	ALTERATION	DATE	BY
H	TRACED NO WT. CHG.	9/1/40	DESIGN
J	REMOVED 9 1/8 DIM, NO WT. CHG.	10/1/40	FISHER

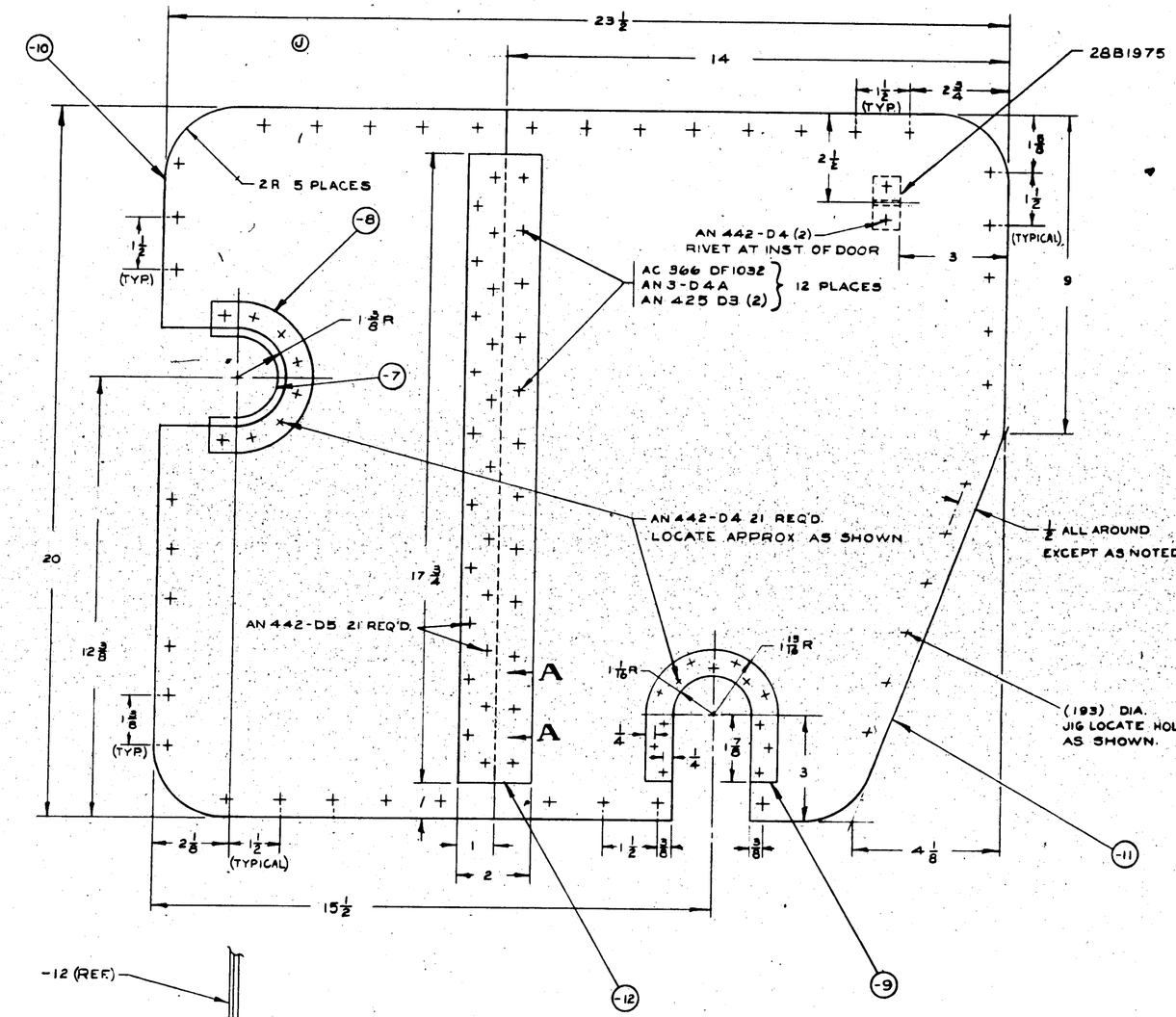

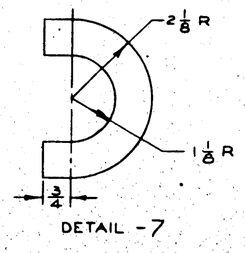

DETAIL -7

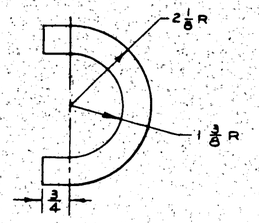

DETAIL -8

FINISH CODE	
Z	ANODIC TREATMENT
P	P-27 PRIMER
GP	GREEN PRIMER
C	CADMIUM PLATE

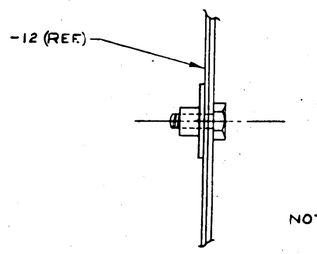

NOTE:-
HEAD OF BOLT MUST BE ON INB'D SIDE TO MAKE DOOR USEABLE.

SECT. A-A
SCALE 12"= 1'-0"

ASSY. DASH NO.	MODEL	NEXT ASSY.	REQ.
	PBY-5A	2885529	1
	28-5AMN	2885529	1
	28-5AMC	2885523	1

REQUIREMENTS PER AIRPLANE

REPLACES 2885553 OF 10/3/40 — 3.23 Cole. QTY

REPLACED BY — Acct. QTY

LIMIT ON SHRINKAGE SPLICES DIVISION OF SHRINKAGE ± 1/32 — SCALE 6"= 1'-0" & NOTED

STAMP PART NUMBER WHERE SHOWN

PART No	STOCK	MATERIAL	SPEC.	LH REQ. -0	RH REQ. -2	LH REQ. -3	RH REQ. -4	LH REQ. -5	RH REQ.
	AC 566 DF 1032					12			
	AN 3D4A								
	AN 425-D3					12			
	AN 442-D5								
	AN 442-D4								
	2881975					1			
-12	.064 x 2 x 18	ALCLAD	QQ-A-362T	1					
-11	.064 x 14 1/4 x 20 1/4	ALCLAD	QQ-A-362T	1					
-10	.064 x 19 3/4 x 20 1/4	ALCLAD	QQ-A-362T	1					
-9	.064 x 3 3/4 x 15	ALCLAD	QQ-A-362T	1					
-8	1.025 x 5 x 4 1/8	ALCLAD	QQ-A-362T	1					
-7	1 1/8 x 3 x 4 3/8	ASBESTOS	COMM.	1					

PARTS LIST PER ASSY.

A C — NAVY NONE — HEAT TREAT

Z-P-GP — FINISH

9/1/40 — DRAFT — CHECK

4/2/40 — STRUCT — MAT.

APPROV. — ENG.

NAME DOOR - L. H.
SHEAR WEB - HULL

OPP. HAND

CONSOLIDATED AIRCRAFT CORP. SAN DIEGO, CALIF.

DWG. G SIZE 2885553

2885553

LET	ALTERATION	DATE	BY	LET	ALTERATION	DATE	BY

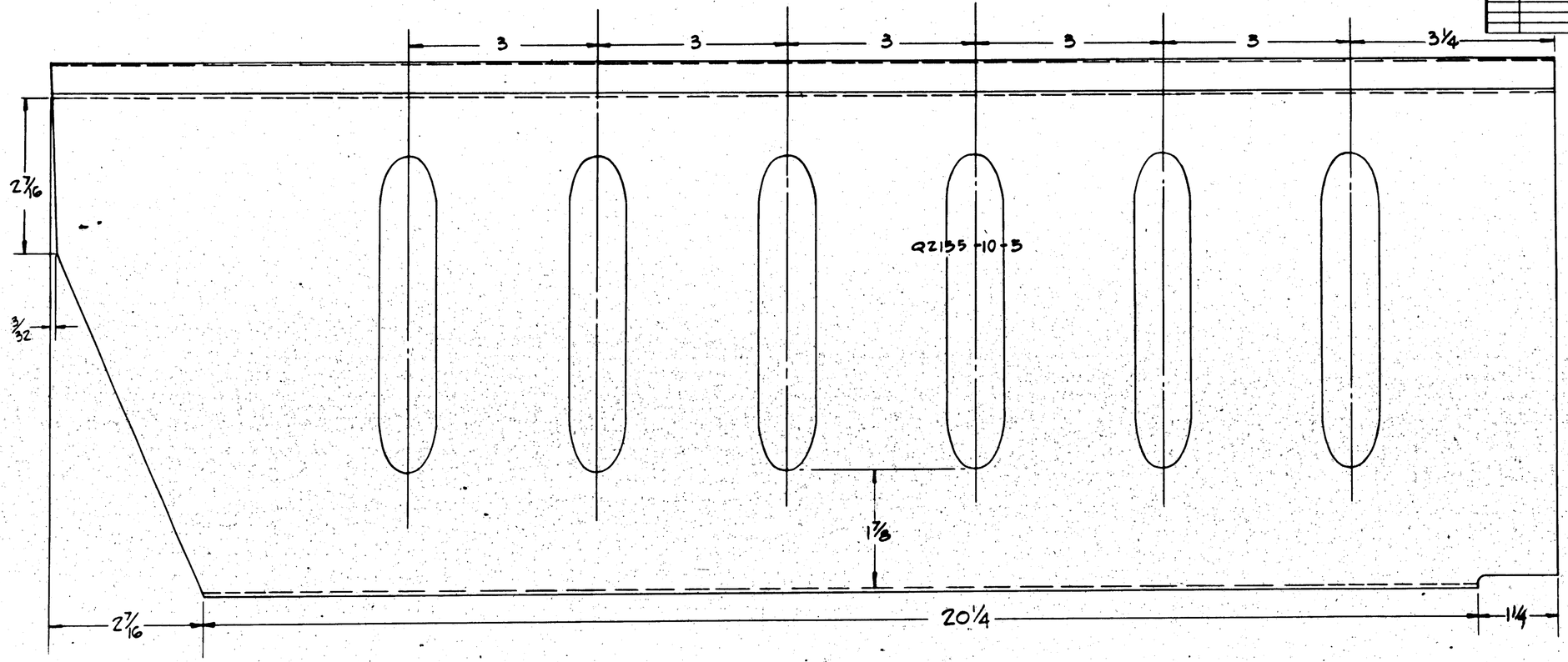

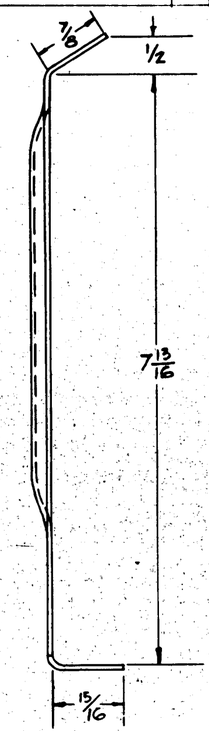

Z ANODIC TREATMENT
P P-27 PRIMER
AP ALUMINIZED PRIMER
C CADMIUM PLATE

NOTE:/
ALL BEND RADII 1/8

-R	QAU-1	2885529	1
	QAU-1	2885523	1
-R	285 AMC	2885527	1
	283 AMC	2885525	1
-R	PBY-5A	2885524	1
-L	PBY-5A	2885522	1

ASSY GAGH No.	MODEL	NEXT ASSY	QTY

REQUIREMENTS PER AIRPLANE

REPLACES — QTY 1-53

REPLACED BY — QTY

Unless otherwise stated all dimensions are in inches. SCALE 12" = 1'-0"

STAMP PART NUMBER WHERE SHOWN

PART No	STOCK	MATERIAL	SPEC.	LH INB REQ	LH INB REQ	LH INB REQ	LH INB REQ	LH INB REQ
	PARTS LIST PER ASSY.			-0	-2	-3	-4	-5
-R	.064 W/4 X 24	ALCLAD	47A6 A	1	1			
-L	.064 W/4 X 24	ALCLAD	47A6 A	1	1			

AC		CHKD/MFG Rel.	2885				
NAVY SR-53T	Z-P-AP	10/3/40	LOS				
HEAT TREAT	FINISH	DRAFT	CHKD	STRUCT	DAT	APPROV	DWG

NAME BEAM - SHEAR WEB HULL — OPP HAND 2885522-R

CONSOLIDATED AIRCRAFT CORP. SAN DIEGO, CALIF — DWG G — 2885555

LET	ALTERATION	DATE	BY
A	DIM. 5 1/16 WAS REMOVED ADDED DIM'S. 4 3/32 & 1 1/8. DIM. 5 5/8 WAS 6 1/4. 48 5/8 WAS 48 1/8. 12 5/8 WAS 12 1/4.	7-15-41	
B	REMOVED 3/4 & 1-5/8 CUTOUT E.P.	4-6-42	

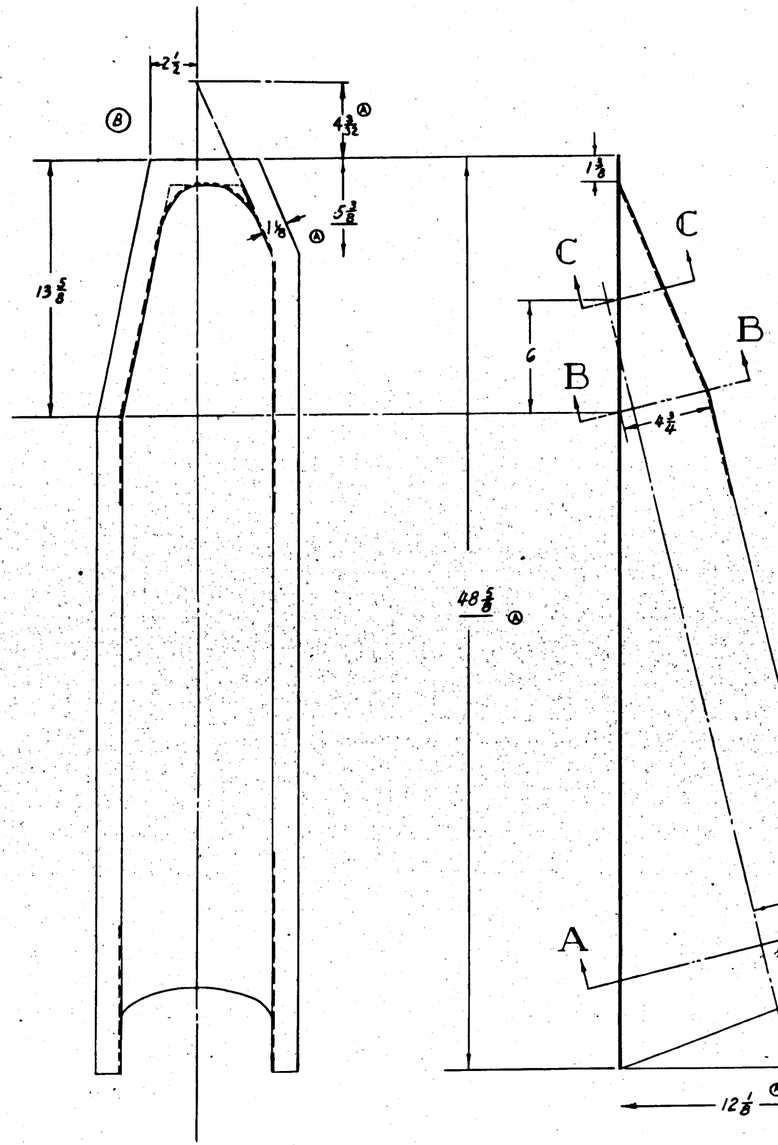

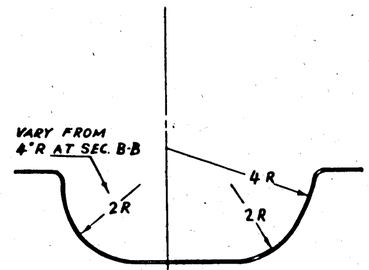

SECTION C-C
SCALE 6"=1:0"

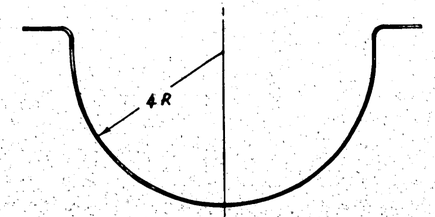

SECTION B-B
SCALE 6"=1:0"

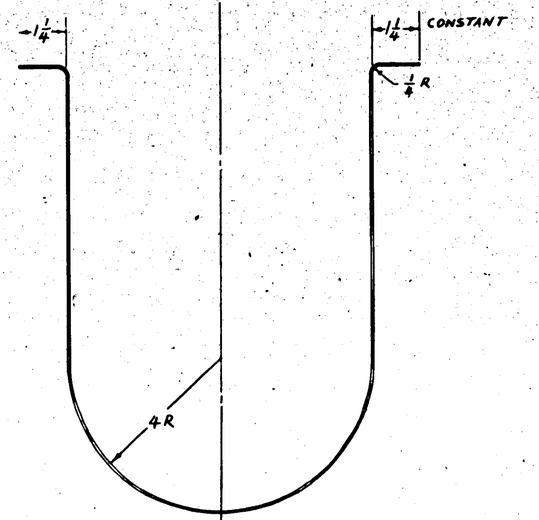

SECTION A-A
SCALE 6"=1:0"

S/I CODE

Z	ANODIC TREATMENT
P	P-37 PRIMER
AP	ALUMINIZED PRIMER
C	CADMIUM PLATE

R	OAU-1	28B5528	1
L	OAU-1		1
R	28-5 ANC		1
L	28-5 ANC		1
R	P&Y-5A		1
L	P&Y-5A	28B5523	1
ASSY BASIC DWG. NO.	MODEL	NEXT ASSY	QUAN.

REQUIREMENTS PER AIRPLANE

REPLACED	58 EA. QUAN. QTY
REPLACED BY	QUAN. QTY
LIST OF SUBSTITUTION SHEET NUMBERS SHOWN	SCALE 2"-1'-0" UNLESS OTHERWISE NOTED
STAMP PART NUMBER WHERE SHOWN	

PART No.	STOCK	MATERIAL	SPEC	LH REQ	RH REQ	LH REQ	RH REQ	LH REQ	RH REQ
0	068 x 36 x 56	ALCLAD	47A8A	-2	-2	-3	-3	-4	-4

PARTS LIST PER ASSY.

A.C. NAVY SR-537	Z-P-AP	ORDER NO. 10-1548	DRAFT	CHECK	STRUCT	DAY	APPROV
HEAT TREAT	FINISH						

NAME WELL - HULL - MAIN LANDING GEAR STRUT

CONSOLIDATED AIRCRAFT CORP. San Diego, Calif.

OFF HAND 28B5558R

DWG. G 28B5558

REV. R

LET	ALTERATION	DATE	BY
A	SUBASSY -11, -7, -12 ADDED		
B	[illegible]		
C	(SEC. BB) 1 3/32 WAS 1 1/8, 3/16 WAS 5/16		
	3/16 R WAS 7/64		
	(SEC. A-A) 1 3/32 WAS 1 1/8	11-4-40	Dunbar
D	CHANGED AN365-1032A-10 NUTS ADDED		
	DWG. 6 NOW (P&D)	6-15-41	DWS
E	ADDED NOTE TO FACE DWG.	7-29-41	WILKS
	[illegible]		
F	IN DETAIL "C" 11/16 DIM. WAS 13/16		
	(12 PLACES) 1/8 CLEARANCE FOR		
	22F0750M-8 WAS 5/16 (NO WT. CHG.)	6-21-42	DUNTZE
G	REMOVED FROM B/M FOR -7:		
	"K5401 x 18 1/8, 24ST EXTR.,		
	46A9-T) FOR -8: "K5401 x 18 5/16,		
	24ST. EXTR., 46A9-T" & FOR -10		
	"K5401 x 18 5/8, 24ST EXTR.,		
	46A9-T" ADDED IN B/M FOR -7		
	STOCK "Y-2-A27RT x 18 1/8" FOR		
	-8: "Y-2-A27RT x 18 5/16" FOR		
	-10: "Y-2A27RT x 14 5/8 WT. CHG. NO.	4-2-42	WILKES DUNTZE

LET	ALTERATION	DATE	BY
H	IN B/M REMOVED "Y-2-A27RT x		
	18 1/8 FOR -7, "Y-2-A27RT x 18 5/16		
	FOR -10, & "Y-2-A27RT x 18 1/2" FOR		
	-8, & REPLACED BY "NOTED" ADDED		
	NOTED TO MATERIAL & SPEC. FOR		
	-7, -8, & -10. ON FACE OF DWG. ADDED		
	MATERIAL NOTE FOR -7, -8, & -10.		
	NO WT. CHG.	10-19-42	LARSEN

E.O. 25540A
E.O. 28268
P.O. 88377

AMD. 3-21-41 TM V.B

60 AS-43
PBY-5
28-5741/2/5/6/10
E043320

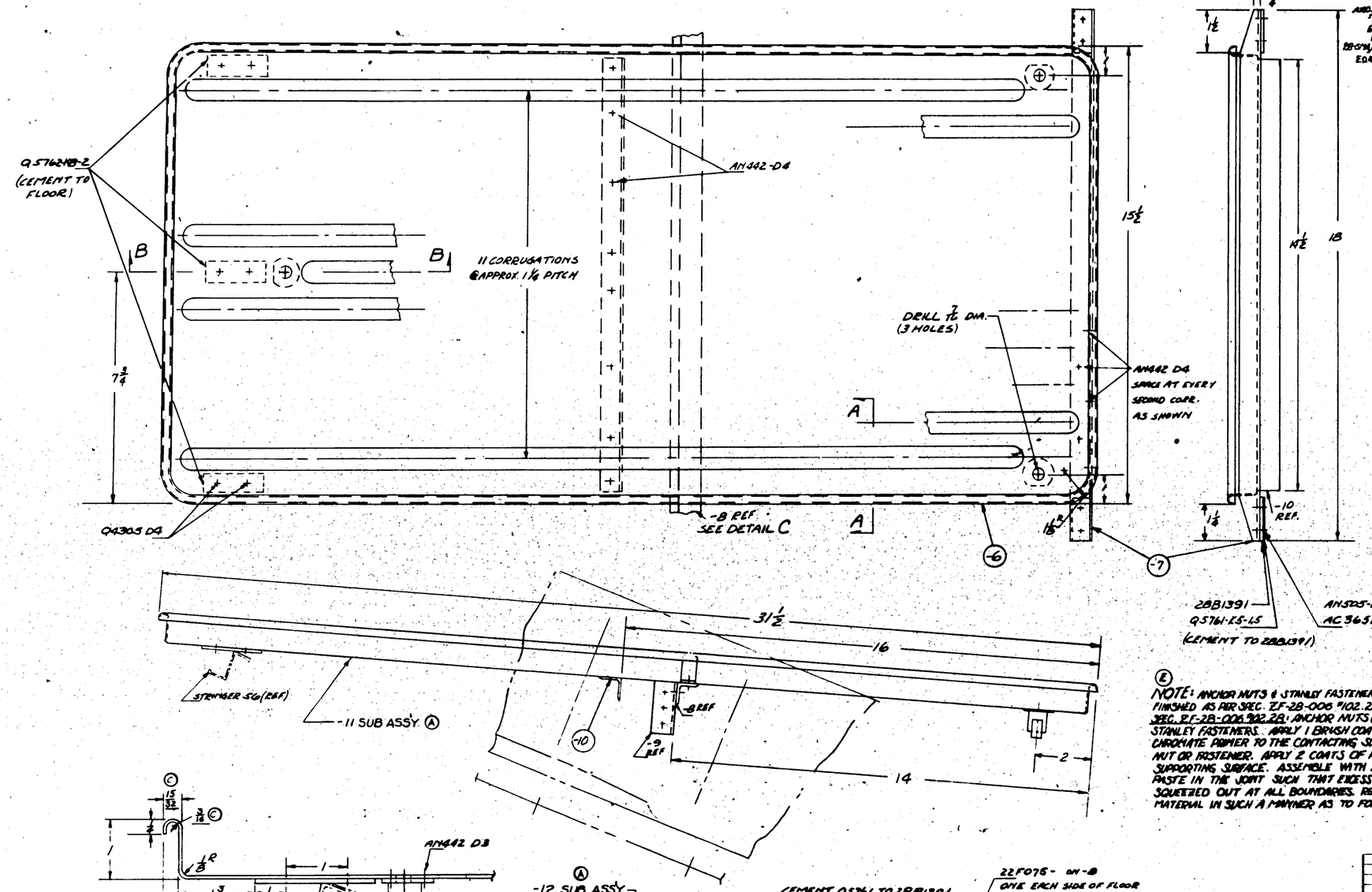

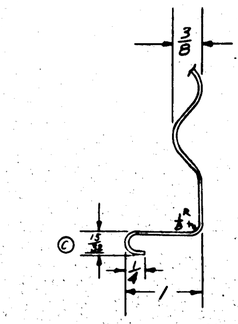

SECTION A-A
FULL SIZE

NOTE:
(H) 1-MATERIAL FOR -7 MAY BE:
(A) Y-2-A27RT X 18 1/8, OR
(B) K5401 X 18 1/8, AL. AL. EXTR., SPEC. QQ-A-354-T.
2-MATERIAL FOR -8 MAY BE:
(A) Y-2-A27RT X 18 5/16, OR
(B) K5401 X 18 5/16, AL. AL. EXTR., SPEC. QQ-A-354-T.
3-MATERIAL FOR -10 MAY BE:
(A) Y-2-A27RT X 14 5/8, OR
(B) K5401 X 14 5/8, AL. AL. EXTR., SPEC. QQ-A-354-T.

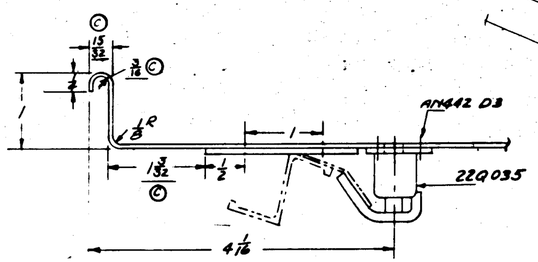

SECTION B-B
FULL SIZE

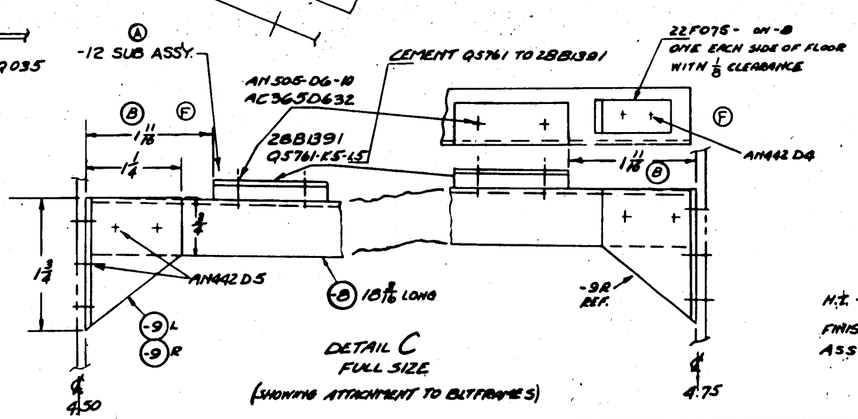

DETAIL C
FULL SIZE
(SHOWING ATTACHMENT TO BULKHEADS)

H.T. -6 TO 24ST PER SPEC. SR53
FINISH Z-P2AP BEFORE ASS'Y OF 22Q035.

FINISH CODE	
Z	ANODIC TREATMENT
P	P-27 PRIMER
AP	ALUMINIZED PRIMER
C	CADMIUM PLATE

(E) NOTE: ANCHOR NUTS & STANLEY FASTENERS ARE TO BE FINISHED AS PER SPEC. ZF-28-006 "102.2B SPEC. ZF-28-006 "102.2B: ANCHOR NUTS (STEEL) & STANLEY FASTENERS APPLY 1 BRUSH COAT OF ZINC CHROMATE PRIMER TO THE CONTACTING SURFACES OF THE NUT OR FASTENER. APPLY 2 COATS OF PRIMER TO THE SUPPORTING SURFACE. ASSEMBLE WITH ZINC CHROMATE PASTE IN THE JOINT SUCH THAT EXCESS MATERIAL IS SQUEEZED OUT AT ALL BOUNDARIES. REMOVE THE EXCESS MATERIAL IN SUCH A MANNER AS TO FORM A FILLET

PART No	STOCK	MATERIAL	SPEC.	LH RH REQ	LH RH REQ	LH RH REQ	LH RH REQ	LH RH REQ
	PARTS LIST PER ASSY.			-0	-2	-3	-4	-5
-12	SUB ASSEMBLY							1/1
-11	SUB ASSEMBLY							1/1
-3R	K13682 x 1/16	24ST. EXTR.	46A9-T					1/1
-3L	K13682 x 1/16	24 ST. EXTR.	46A9-T					1/1
-10	NOTED**	NOTED	NOTED					1/1
-7	NOTED	NOTED	NOTED					1/1
-6	.040 / 36 x 21	2450 ALCLAD	4740-A					1/1
	PARTS ON -11 SUB ASSEMBLY							
	AN505-D6-10							4
	AC365-D632							4
	Q5762-K8-2							3
	Q5761-K5-15							2
	28B1391							2
	22Q035							5
	-10 NOTED**	NOTED	NOTED					1
	-7 NOTED	NOTED	NOTED					1
	-6 .040 / 36 x 21	2450 ALCLAD	4740-A					1
	PARTS ON -11 SUB ASSEMBLY							
	AN505-D6-10							4
	AC365-D632							4
	Q5762-K8-2							3
	Q5761-K5-15							2
	28B1391							2
	22Q035							5
	-10 NOTED**	NOTED	NOTED					1
	-7 NOTED	NOTED	NOTED					1
	-6 .040 / 36 x 21	2450 ALCLAD	4740-A					1
	PARTS ON -11 SUB ASSEMBLY							
	Q4305-D4							
	AN442-D5							
	AN442-D4							
	AN442-D3							

ASSY DASH NO	MODEL	NEXT ASSY	REQ
PBY-5B	28B5100		2
28-5MH	28B5100		2
28-5TLF	28B5100		2
28-5MG	28B5100		2
28-5MA	28B5100		2
PBY-5	28A5100		2

#12 ℄ ON
#25 ℄ ON

REQUIREMENTS PER AIRPLANE
REPLACED
REPLACED BY
ASS'Y WT.
SCALE 6" = 1'-0"
℄ NOTED
STAMP PART NUMBER WHERE SHOWN

A.C.
NAVY NOTED
HEAT TREAT
NOTED
FINISH
2-1-40
BRANDT
DRAFT
CHECK
STRUCT
MAT
APPROV
ENG

NAME FLOOR-HULL STA. 460 TO STA. 475

OPP HAND

DWG G
SIZE

28B5561

CONSOLIDATED AIRCRAFT CORP. SAN DIEGO, CALIF.

1955888

LET	ALTERATION	DATE	BY
A	REMOVED FOR -7 MIL SPEC "KS401 X28, AL. ALL EXTR., 4040 (mat'l" ADDED IN B/M. STOCK FOR -7: "Y-2-A27RT X28" WT. CHG. WAS 0.143		
B	IN B/M FOR -7 REPLACED "Y-2-A27RT X28" WITH "NOTE 8" & ADDED "NOTE 8" TO MATERIAL & SPEC. TO FACE OF DWG. ADDED NOTE 8 "1. NO WT. CHG.	10-943	LARSEN

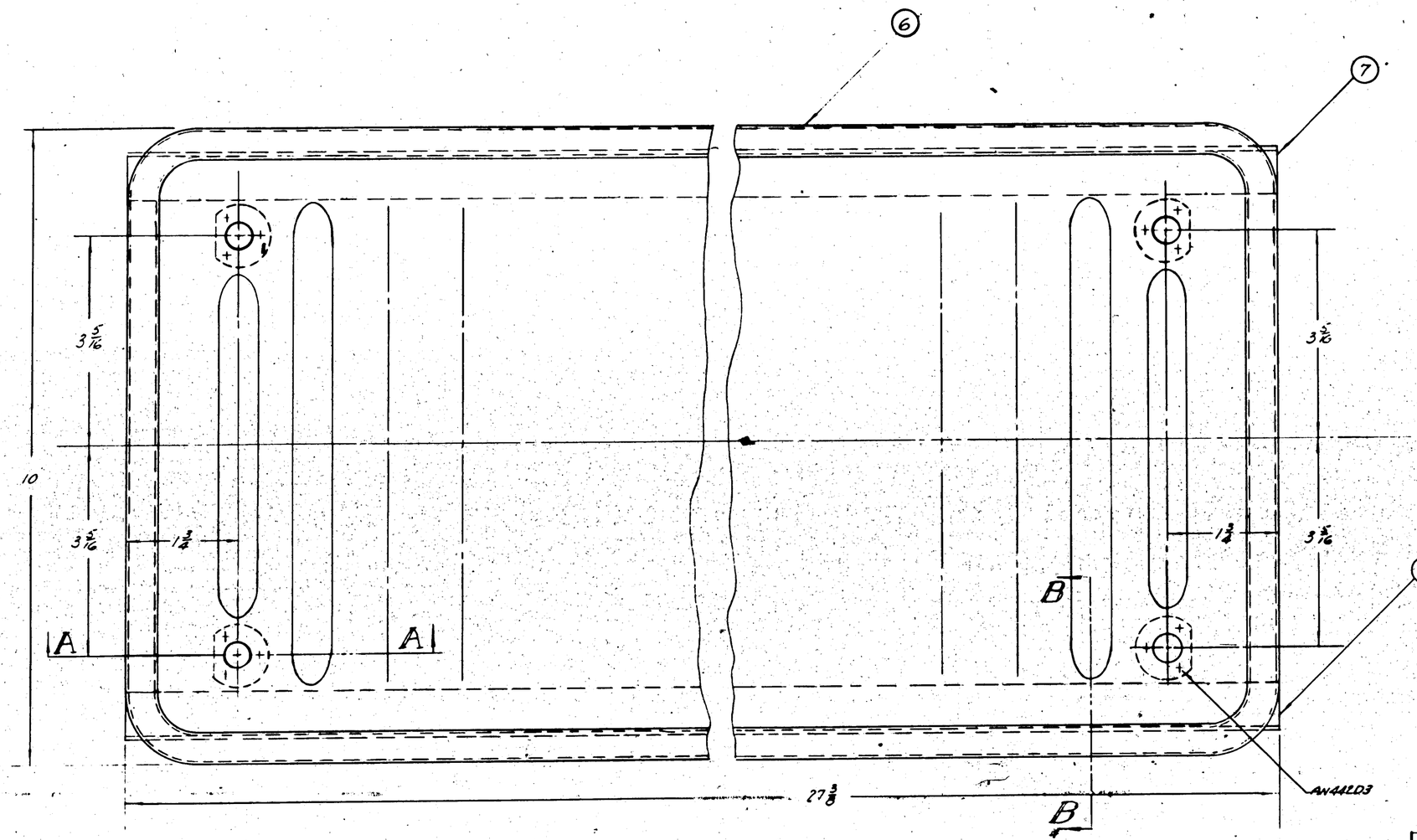

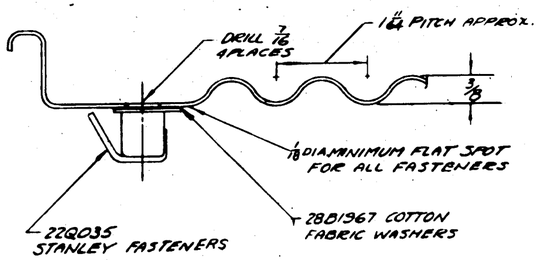
DRILL 7/16 4 PLACES
1 1/4" PITCH APPROX.
3/8
1/8 DIA MINIMUM FLAT SPOT FOR ALL FASTENERS
22Q035 STANLEY FASTENERS
28B1967 COTTON FABRIC WASHERS

SECTION A-A

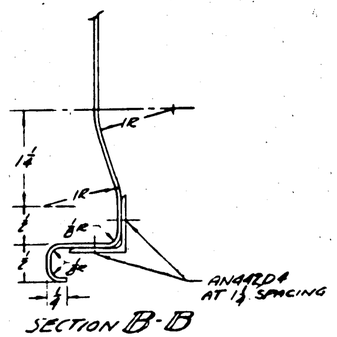

SECTION B-B

(8) NOTE:-
L- MATERIAL FOR -7 MAY BE:
(a) Y-2-A27RT X 28, OR
(b) KS401 X 28, AL. AL. EXTR., SPEC. QQ-A-354-T.

FINISH CODE	
Z	ANODIC TREATMENT
P	P-07 PRIMER
AP	ALUMINIZED PRIMER
C	CADMIUM PLATE

AN442D4
AN442D3

28-5AMN	28B5596	/											
EA-10	28B5596	/											
28-5AMC	28B5596	/	28B1967										
P3Y-5A	28A5596	/	22Q035	STANLEY MFG CO.								4	4
ASSY. DASH NO.	MODEL	NEXT ASSY	DWG	REQUIREMENTS PER AIRPLANE									
REPLACES			Z 28B5598 CALC QTY										
REPLACED BY			ACT QTY										
LIST BY DASH NO. OTHERWISE SPECIFIED	SCALE 12"=1'-0"												
A1													
STAMP PART NUMBER WHERE SHOWN													

PART No	STOCK	MATERIAL	SPEC	LH RH REQ	LH RH REQ	LH RH REQ	LH RH REQ	LH RH REQ
· 7	NOTED	NOTED	NOTED	2				
· 6	.040 X 16 X 34	ALCLAD	4148-0 OR A	1				
PARTS LIST PER ASSY.				-0	-2	-3	-4	-5

A.C. COVER No.		MATERIAL	NCV	GREEN	R	NPB
NAVY 3859-7 HEAT TREAT	Z-P-AP	W'T. LBS	LOS			
	FINISH	DRAFT	CHECK	STRUCT	MAT	APPROV.

NAME FLOOR - HULL - STA. 40-42

OPP HAND

DWG NO. G 28B5598

CONSOLIDATED AIRCRAFT CORP. San Diego Calif.

28B5598 R

LET	ALTERATION	DATE	BY
	E.O. AB110 PBY-5A OA-10 & LA-10 AMC		
A	ADDED -13 WAS -10 ON DWG. B/L	7-6-43	Duncan
B	ADDED 17½° DIM.	12-4-43	Duncan
C	ADDED -2 ASS'Y & REF. E.O. A 16248	4-29-44	WARD
D	2881391 WAS 2881391-2 (1) DIM. 15/16 WAS 1 1/16, ADDED 2881300-65 & LOC. DIM. 33 TO ℄ ADDED AN442-D4, AN509D6-8(1) & AC365-D632 (1) REQ. WT. CHG.	2-13-45	Bonney
E	18 B/M. FOR -8, REPLACED "K1288 X9, ALCOA 24ST, 4GA9T" WITH NOTED: 1 FOR -9 REPLACED "K1288X8, ALCOA 24ST, 4GA9T" WITH "NOTED" TO FACE OF DWG. ADDED NOTES "E & "3 (SUPERCHG)	9-20-45	Fuller

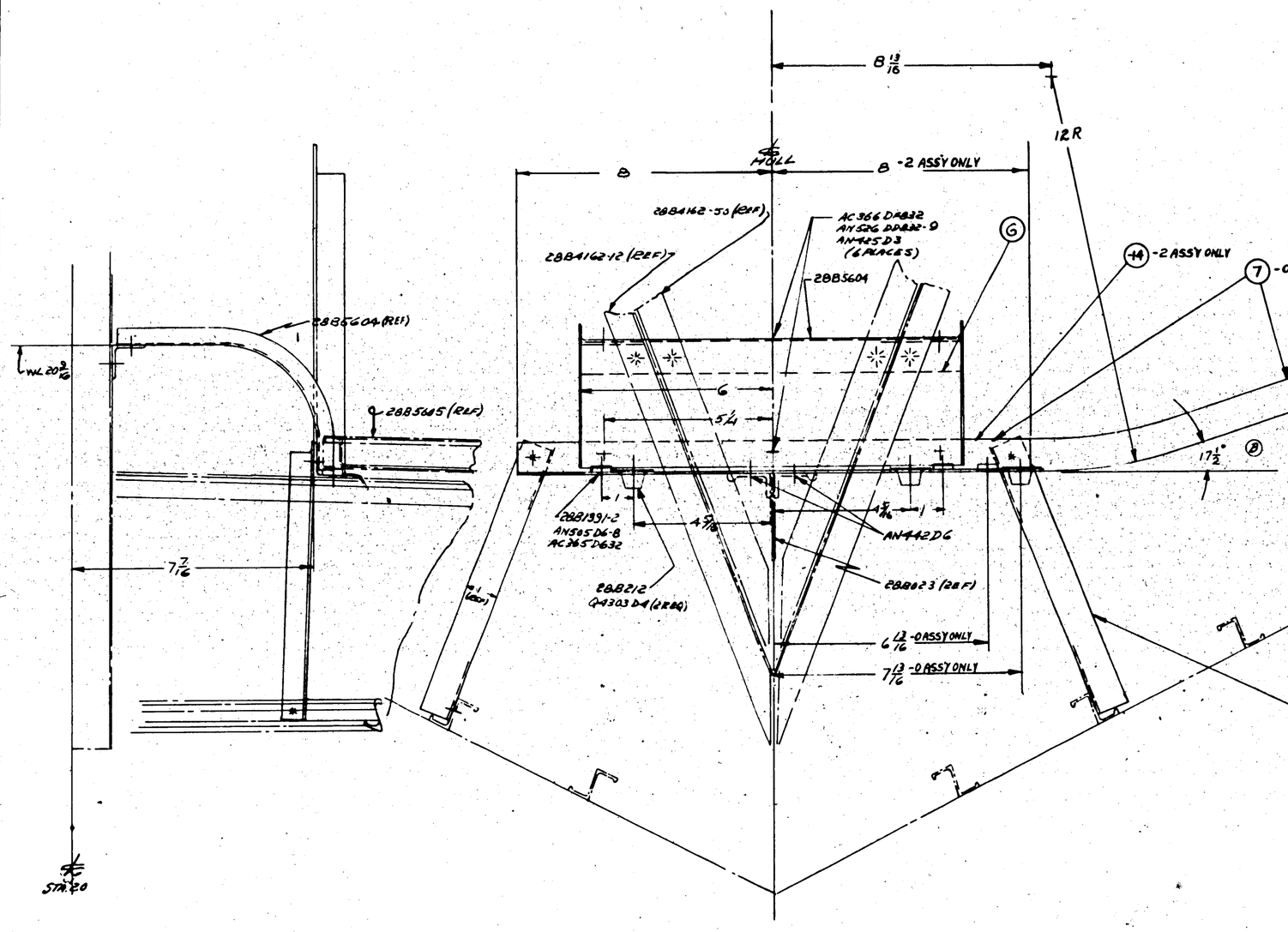

VIEW LOOKING FORWARD

NOTE:-1 ALL RIVETS AN442 D UNLESS OTHERWISE SPECIFIED

E 2. MAT'L. FOR -8 MAY BE:
A. YG-A24RT X 9, OR
B. K1288 X 9, 24ST AL. ALLOY EXTR., SPEC. 4GA9, COND. T.

3. MAT'L. FOR -9 MAY BE:
A. YG-A24RT X G, OR
B. K1288 X G, 24ST AL. ALLOY EXTR., SPEC. 4GA9, COND. T.

AN442 D6			6	6
AN425 D3			6	6
QA303 D4			6	6
AN526 DD832-3			6	6
AC366 DD832			6	6
AC365 D632			6	6
AN505 D6-8			6	2
AN442-D5				
AN442-D4				
2881300-65			1	
2881391			1	
2881391-2			5	2
2881212			4	2
2881604			1	1
-11 K78.1 X 1 3/16	ALCOA 24ST	16A9T	-	1
-13 AN442D6-13	ALCOMFST	16A9T	1	-
-9 NOTED	NOTED	NOTED	1	-
-8 NOTED	NOTED	NOTED	6	2
-7 K78.1 X 33	ALCOA 24ST	16A9T	1	-
-6 K78.1 X 1 3/16	ALCOA 24ST	16A9T	1	1

PART NO	STOCK	MATERIAL	SPEC.	LH REQ -0	RH REQ -0	LH REQ -2	RH REQ -2	LH REQ -3	RH REQ -3	LH REQ -4	RH REQ -4	LH REQ -9	RH REQ -9

PARTS LIST PER ASSY.

MCR 14822

ASSY DASH NO.	MODEL	NEXT ASSY	REQ.
-0	EB-5AMN	2885500	1
-2	PBY5A	PB2B500	1
-3	EB AMC	2885500	1
-9	PBY5A	PB2B500	1

REQUIREMENTS PER AIRPLANE

REPLACES — REPLACED BY — Qty. 1.0

STAMP PART NUMBER WHERE SHOWN — SCALE 6"=1'-0"

FINISH CODE
Z ANODIC TREATMENT
P P-27 PRIMER
AP ALUMINIZED PRIMER
.016 PLATE

AC — NAVY NONE — HEAT TREAT — Z-P-AP — FINISH

Drawn — Checked — Engineer — Date — Approved

NAME COVER INSTALLATION -HULL- ABSE WHEEL DOOR JACK MECH.

CONSOLIDATED AIRCRAFT CORP. San Diego, Calif.

OPP. HAND — DWG. G — 2885603 — SHEET 1 OF 2

LET	ALTERATION	DATE	BY

LET	ALTERATION	DATE	BY
A	ADDED NOTE TO FACE OF DWG. REVISED 28B1391 FROM (B) & FACE OF DWG.	7-9-45	BLACK
B	ADDED TO FACE OF DWG & B/M - 28B15M (B), AN515-D6-11 (C) AC365T-D632 (D) ; QQ-T-451-FS-1 (E) & K5401 X41	12-6-45	
C	1/8" PITCH-HTYPICAL WAS 1/4"	12-20-45	
D	IN B/M. FOR -7L & -7R REPLACED "K5401 X 41, AL. AL EXT, QQ-A-354-T" WITH "Y-2-A27RT X41" (MT. CHG. NIL)	2-21-46	TRACE
E	IN B/M. 28B1391 WAS 29B1391. NO WT. CHG.	7-9-45	PAIN
F	IN B/M FOR -7 1/2 R REPLACED "Y-2-A27RT X41" WITH "NOTED" ADDED "NOTED" TO MATERIAL SPEC. IN FACE OF DWG. ADDED NOTE #2. NO WT. CHG.	10-8-46	LARSON

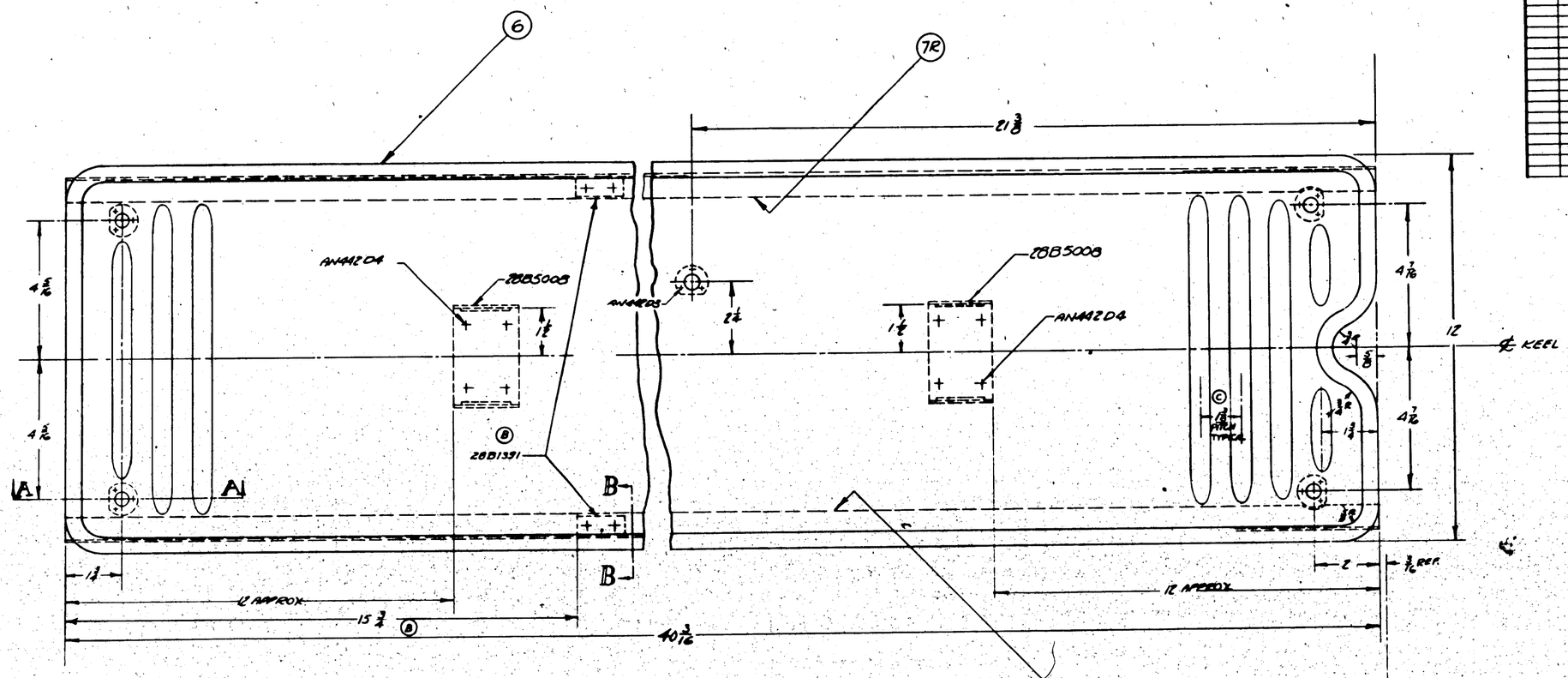

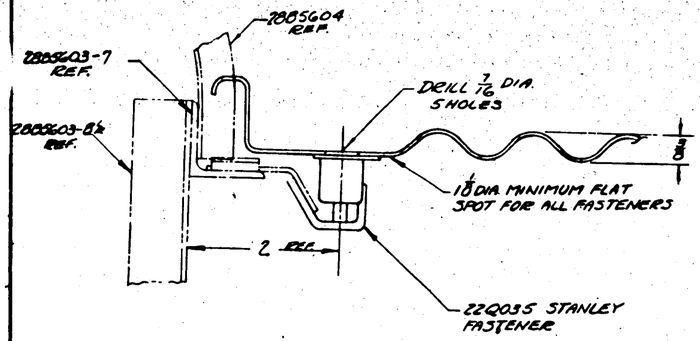

SECTION A-A
12"=1'-0"

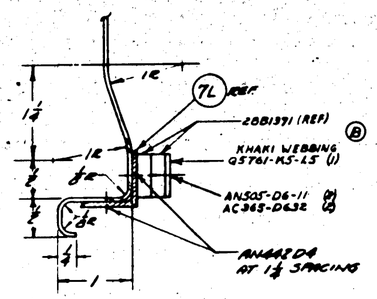

SECTION B-B
12"=1'-0"

A NOTE: ANCHOR NUTS & STANLEY FASTENERS ARE TO BE FINISHED AS PER SPEC. ZP-28-006 #102.28 SPEC. ZP-2A-006 #102.2B: ANCHOR NUTS (STEEL) & STANLEY FASTENERS. APPLY 1 BRUSH COAT OF ZINC CHROMATE PRIMER TO THE CONTACTING SURFACES OF THE NUT OR FASTENER. APPLY 2 COATS OF PRIMER TO THE SUPPORTING SURFACE. ASSEMBLE WITH ZINC CHROMATE PASTE IN THE JOINT SUCH THAT EXCESS MATERIAL IS SQUEEZED OUT AT ALL BOUNDARIES. REMOVE THE EXCESS MATERIAL IN SUCH A MANNER AS TO FORM A FILLET.

F 2- MATERIAL FOR -7L & -7R MAY BE:
(A) Y-2-A27RT X41, OR
(B) K5401 X41, AL. AL. EXTR, SPEC. QQ-A-354-T.

FINISH ZP-2AP BEFORE ASSY. OF 22Q035 FASTENERS

| | | |

LET	ALTERATION	DATE	BY
A	12 1/2° ANGLE ADDED TO -6	12-2-41	[illegible]
B	HOLES ON ANCHOR NUT & STANLEY FASTENER WAS ADDED 28B1967 WAS REMOVED FROM B/P (PART OF) ASSY.	12-27-41	[illegible]
C	REPLACED -8 (1) 28B2224-3 (1) WITH 28B2224-5 (2) — ADDED TO -6 (ONE) 28B2224-4 BLANK AND ADDED CHGS 12 1/2° & 3/16 RT. CHANNEL ASSY.	2-2-42	[illegible]

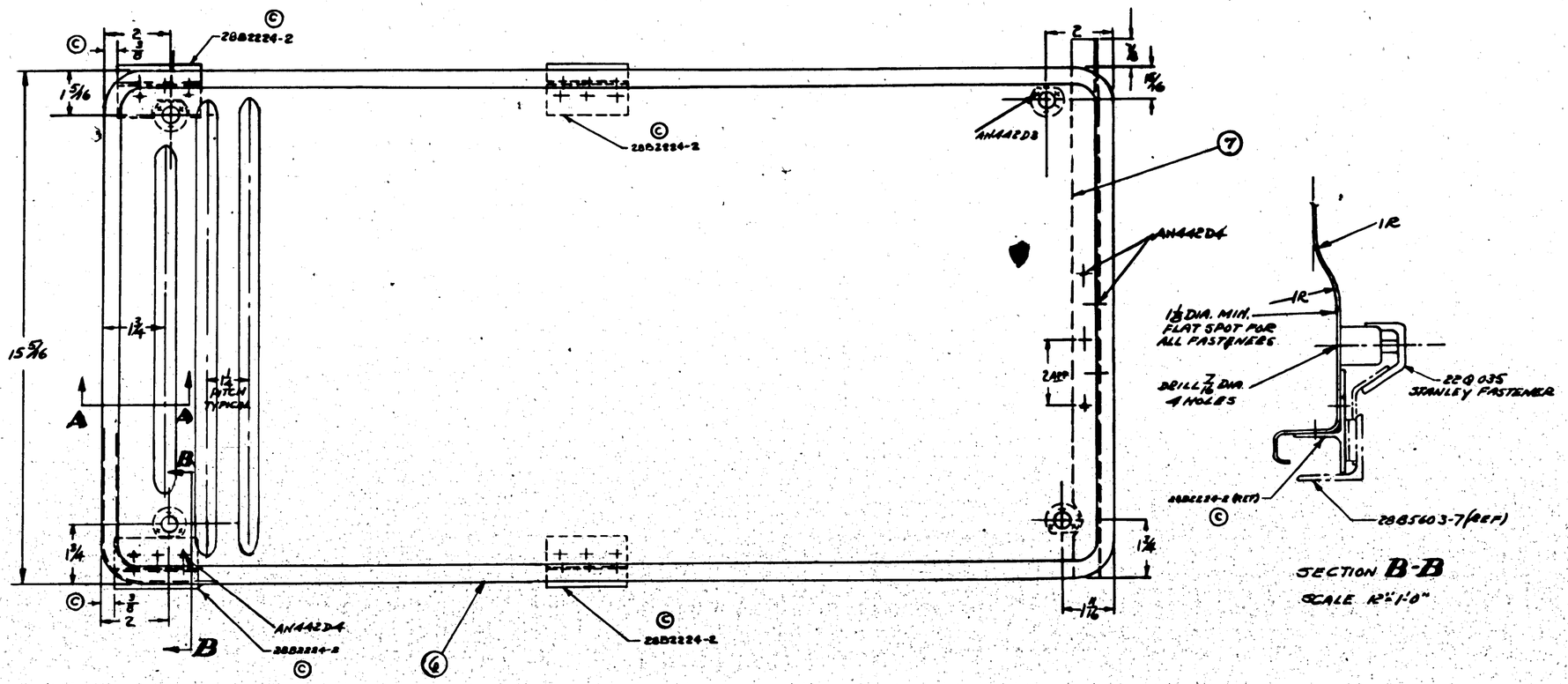

SECTION B-B
SCALE 12"=1'-0"

FINISH - Z-P-2AP BEFORE ASS'Y OF 22Q035 FASTENERS

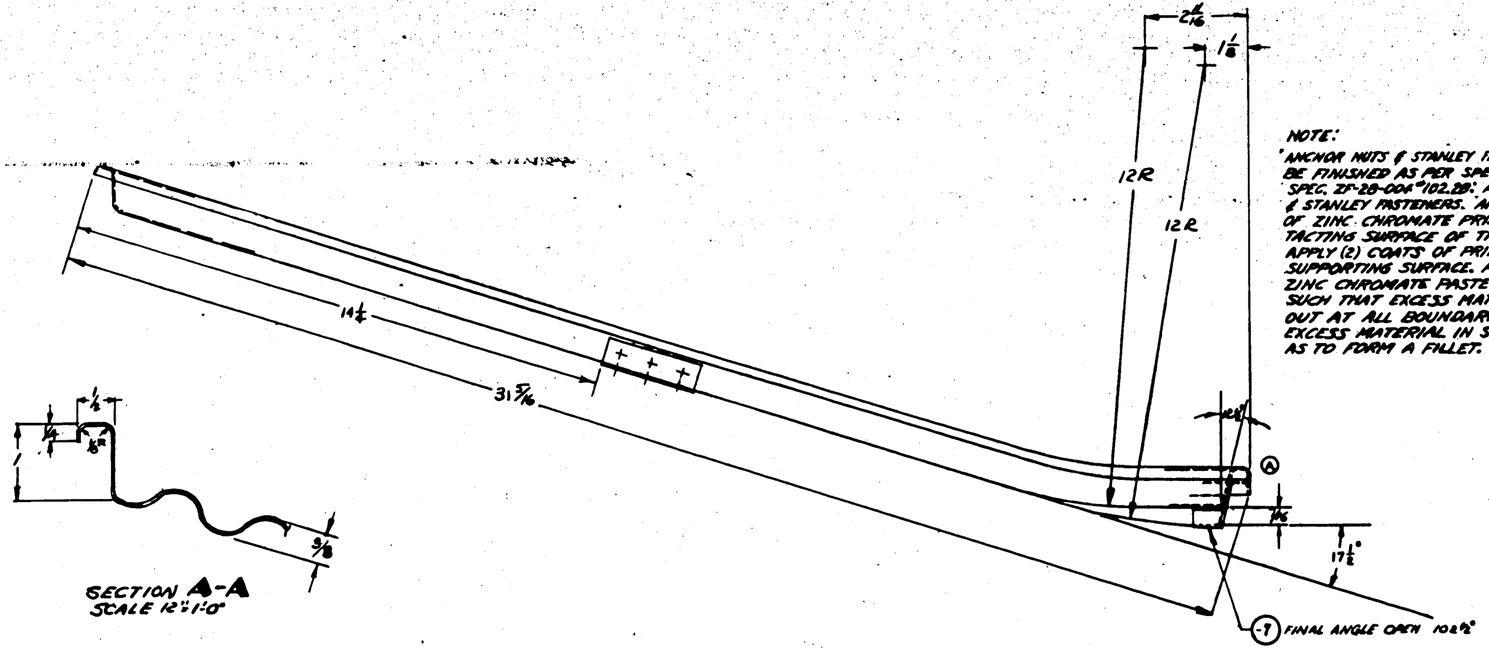

SECTION A-A
SCALE 12"=1'-0"

NOTE:
"ANCHOR NUTS & STANLEY FASTENERS ARE TO BE FINISHED AS PER SPEC. ZF-2B-006 "102.28" SPEC. ZF-2B-006A "102.28": ANCHOR NUTS (5) & STANLEY FASTENERS. APPLY (1) BRUSH COAT OF ZINC CHROMATE PRIMER TO THE CONTACTING SURFACE OF THE NUT OR FASTENER. APPLY (2) COATS OF PRIMER TO THE SUPPORTING SURFACE. ASSEMBLE WITH ZINC CHROMATE PASTE IN THE JOINT SUCH THAT EXCESS MATERIAL IS SQUEEZED OUT AT ALL BOUNDARIES. REMOVE THE EXCESS MATERIAL IN SUCH A MANNER AS TO FORM A FILLET.

SH CODE

Z	ANODIC TREATMENT
P	P-17 PRIMER
AP	ALUMINIZED PRIMER
C	CADMIUM PLATE

PART NO	STOCK	MATERIAL	SPEC.	-0 REQ.	-2 REQ.	-3 REQ.	-4 REQ.	-5 REQ.
	PARTS LIST PER ASSY.							
-7	1/32 x 4 x 18	AICOR 24ST	4643-T					1
-8	.040 x 2 1/2 x 3 5/8	ALCLAD	4278-A					1
							4	
	22Q035	STANLEY PARTS CO.					4	
	28B2224-2					4		
	AN442D4 AN442D3				2			

ASSY DWG NO.	MODEL	NEXT ASSY	QUAN.
	PBY-5A	28B5710	
REQUIREMENTS PER AIRPLANE			
REPLACED		S.O. DWG. NO.	
REPLACED BY		NEXT ASSY	

SCALE 6"=1'-0" & 12"=1'-0"
STAMP PART NUMBER WHERE SHOWN

A.C.								JPZ	LWA
HEAT TREAT	NOTED	FINISH			GREEN		11/40		
NAME FLOOR - NULL - FOOD LOCKER ACCESS						OPP. HAND			
CONSOLIDATED AIRCRAFT CORP. San Diego, Calif.						DWG. G	28B5609		

LET	ALTERATION	DATE	BY
A	ORIG.	8-5-41	SALS
B	DIM. [illegible] WAS ADDED -14	8-8-41	SALS
C	SUBSTITUTED -16 FOR -11, -16 FOR -18, -10 FOR -7, ADDED -14; CLASS WAS 4 ASST ADDED -16	8-11-41	Ryan
D	CHANGE "C" REFLECTION ON PART 28-BSAK-6 (OR-10 ALL SHIPS) WAS REFLECTION ON REV-24-SHIPS 87 & ON 88-BSAK-SHIPS 2 & ON 4 OR-10 - ALL SHIPS.	8-12-41	[illegible]
E	COMBINED NOTES FROM -7 & -19 AND ADDED NOTES FOR VIEWS	8-19-41	BOYD
F	T.S.A.N.C. NO WEIGHT CHANGE. ADDED -12 TO PART IN -9 SUB ASSY. NO WT. CHG.	8-22-41	HUNT
G	ADDED VIEW V-V (NO WT CHG)	9-16-41	NUMP
H	IN VIEW L-L TRIMMED -16 & -15, ADDED DIMS. 1 3/8, 1/2, & 4.5° (2 PLACES). WT. CHG. NEG.	9-30-41	[illegible]
J	CREATED -20 SUB-ASS'Y (PBY-5A FOR MCR 305-322) ON		
K	(CONT.) SAME AS -8 EXCEPT -211 091X4 7/8 2024-T; ALCLAD; ADDED -22 (.091 X 3 X 3 1/8, ALCLAD; 24-A-362-T (1)) WAS -19 & ADDED -22 (.091 X 3 X 3 1/8, ALCLAD; 24-A-362-T (1)). LIMITED -6 SUB-ASS'Y (PBY-5A (TO MCR 305-322) ADDED DIMS B, 3 DIA & 4 1/4 IN. NOTE: OPPOSITE HAND TO -17 ASS'Y ETC." EXCEPT AS NOTED WAS "EXCEPT FOR CONNECTION TO 28B1066" WT. CHG NEG.	12-8-41	[illegible]

PBY-5A, -5A-10, 28-5AK E.O. A 1456
PBY-5A, -5A-10, 28-5AK E.O. A 3339

E.O. A 13727 PBY-5A 28-5AK -5A-10

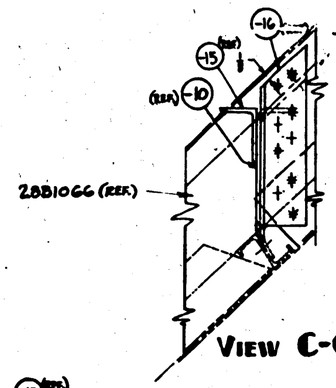

VIEW C-C

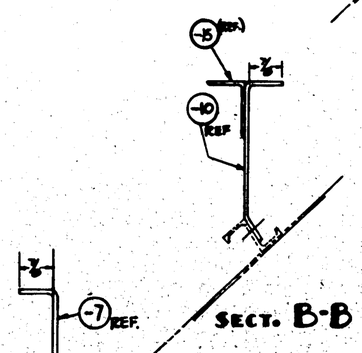

SECT. B-B

SECT. F-F

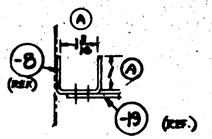

SECT. H-H

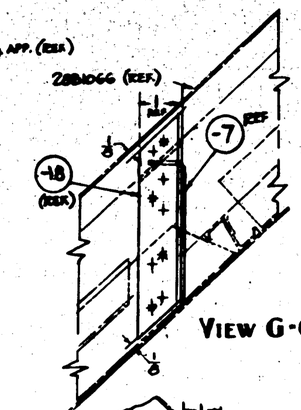

VIEW G-G

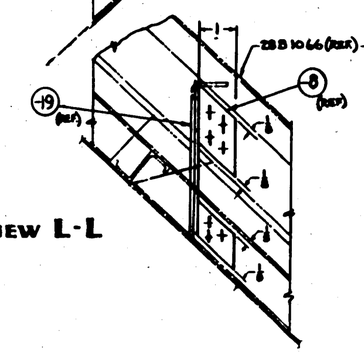

VIEW L-L

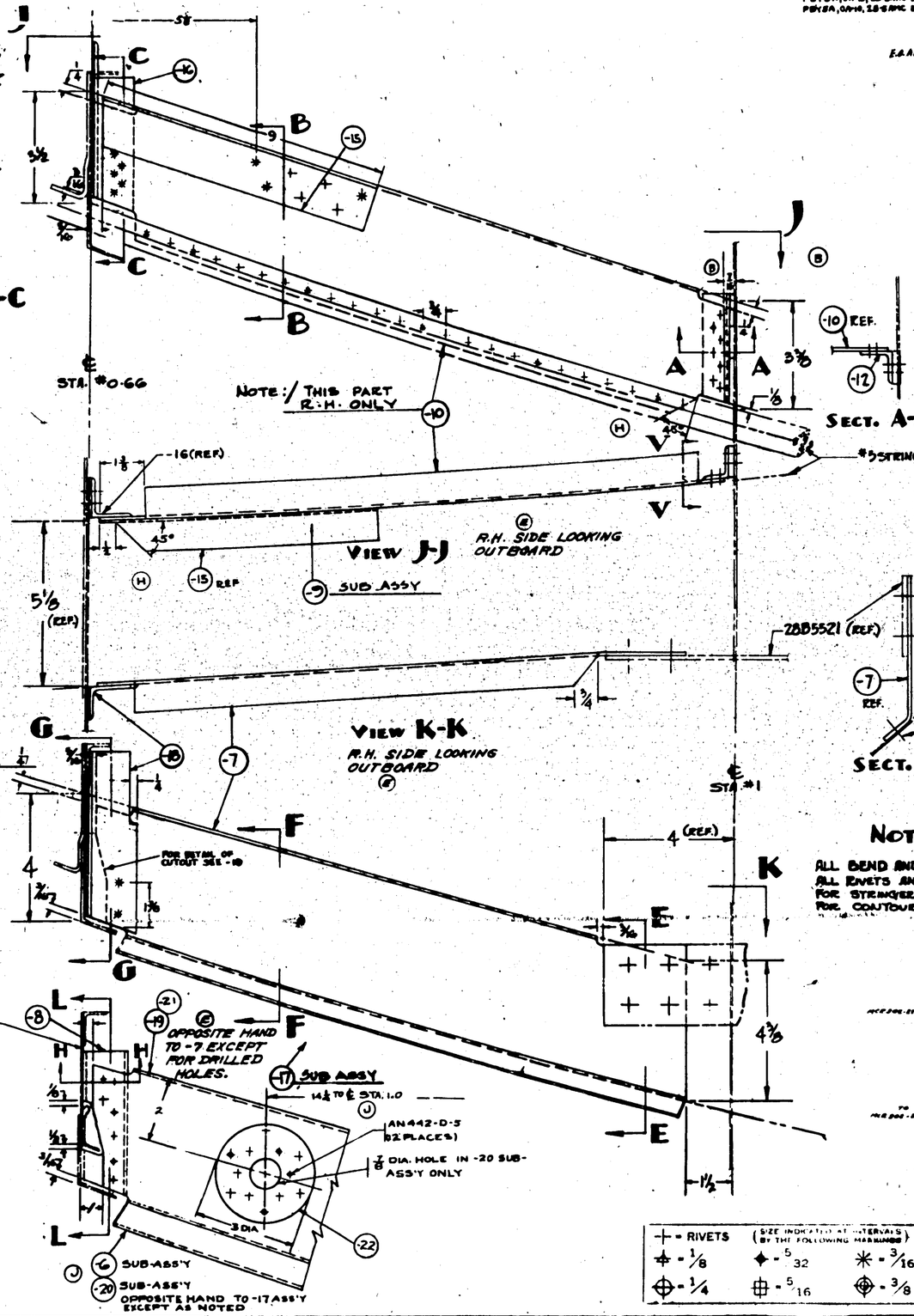

NOTE :/
ALL BEND AND CUTOUT RADII 5/32
ALL RIVETS AN442-D
FOR STRINGER LOCATIONS SEE 28B1007
FOR CONTOUR SEE 28B098

= RIVETS	(SIZE INDICATED AT INTERVALS BY THE FOLLOWING MARKINGS)		
- 1/8	- 5/32	- 3/16	
- 1/4	- 5/16	- 3/8	

AN442-D5				
-22	.091 X 3 3/8 X 3 1/8	ALCLAD	24-A-362-T	1
-21	.091 X 4 3/4 X 3 1/8	ALCLAD	24-A-362-T	1
-8				
-20	SUB-ASS'Y			
AN442-D6				
-18	K6434 X 6 1/8	AL. AL. EXT.	4449-T	1
-7	.091 X 6 1/8 X 21 5/8	ALCLAD	47AB-A	1
-11	SUB ASSY			
AN442-D8				
-16	K6834 X 8 1/8	AL. AL. EXT.	4449-T	1
-14	K6834 X 8 3/4	AL. AL. EXT.	4449-T	1
-15	K6834 X 4 1/8	AL. AL. EXT.	4449-T	1
-10	.091 X 8 1/8 X 21 5/8	ALCLAD	47AB-A	1
-9	SUB ASSY			
AN442-D5				
-18	.091 X 4 3/8 X 2 3/8	ALCLAD	47AB	1
-8	.091 X 3 3/8 X 4 3/8	ALCLAD	47AB	1
-6	SUB ASSY			

-20	PBY-5A	28B5522		
-17	PBY-5AMN	28B5522		
-9	PBY-5MN	28B5522		
-6	PBY-5AMN	28B5522		
-17	28-5AMC	28B5522		
-9	28-5AMC	28B5522		
-6	28-5AMC	28B5522		
-17	PBY-5A	28B5522		
-9	PBY-5A	28B5522		
-6	PBY-5A	28B5522		
ASSY. SUB ASSY.	MODEL	PART ASSY.	REQ.	

REQUIREMENTS PER AIRPLANE

PART NO.	STOCK	MATERIAL	SPEC.	LH BH REQ	LH FH REQ	RH BH REQ	RH FH REQ	LH SH REQ	RH SH REQ
PARTS LIST PER ASSY.				-0	-2	-3	-4	-5	

UNLESS OTHERWISE SPECIFIED: ± 1/32 — SCALE 6"=1'-0"
STAMP PART NUMBER UNDER

HEAT TREAT	FINISH	SPEC.	STRUCT	MAT	ASSEMBLY	DWG.
AN-H-32 T	Z-P-AP	P AP	CHECK	STRUCT	MAT	ASSEMBLY	DWG.

NAME: BEAMS - HULL - FWD BOTTOM
CONSOLIDATED AIRCRAFT CORP. San Diego, Calif.
DRAWING NO. G 28B5612
SCALE FULL

THIS PRINT WAS RUSH RELEASED FOR CHANGE "C" 8-12-41

R 21958

LET	ALTERATION	DATE	BY
	ADDED PART NO'S TO CALLOUTS WHERE REQUIRED		
	ADDED AN526D01032-9 & AC365D1032 RIVETS		
	REMOVED AN423DD5 & AC365D425		
	FROM (B) ADD AN4DD8-10 STOCK		
	SIZE 2¾ WAS 2½	12-1-41	[illegible]
H	DET "K" (I) WAS 1⅞ CHANGED		
	STRINGER CUTOUT FROM TRIM		
	REVISED TO AGREE SHOP	12-17-41	[illegible]
C	ADDED DETAILS -B (19) TO FACE OF DRAWING	4-11-42	[illegible]
D	AN490-7A WAS AN490-10A (6 REQ) AN490-8A WAS AN490-10A (3 REQ)	4-13-42	HART
E	(WT. CHANGE ONLY)		
	4½ WAS 4⅝, 13½ WAS 13⅝, ADDED DIMS. 4⅝ & 2⅛ (WT. CHG. ONLY)	5-13-42	HART
F	REVISED -7 & -13. ASSIGNED -15 & -16 FOR REFERENCED PARTS. DIM. 9⅛ WAS 10⅛. ADDED DIMS. 9⅛ & 3/4		
	WT. CHG. ONLY.	8-27-42	[illegible]
G	ADD -18 (1) TO ASM & FACE OF DWG. & NOTE: "-18 — SPARES (NEG. WT. CHG.)"	10-8-42	[illegible]

LET	ALTERATION	DATE	BY
H	[illegible]		
J	[illegible]		
	ALL AL. EXTR. 24ST WAS 24S		
	NOTED "NO EDGE RADIUS"		
	ADDED "MATERIAL MATL."		
	CHG. -8 A/R WT. CHG.		
K	ADDED SURFACE (VIEW L.H.) W. FWD.) & S/M AN8DD-7A (5), AC365DD824-5(2), AN4DD7A & AC365D428 (8) & -15 REQ (WAS (6) EA. REQ. WT. CHG. NEG.	12-21-42	[illegible]

DETAIL OF -6

DETAIL OF -15½

DETAIL OF -18
SCALE: 12" = 1'-0"

DETAIL OF -8
SCALE: 12" = 1'-0"

DETAIL OF -9
SCALE: 12" = 1'-0"

PLAN VIEW

VIEW LOOKING INB'D FWD

VIEW LOOKING FWD.

SEC A-A

NOTE: -15 IS LOCATED BETWEEN -6 & -16

THIS DWG. HAS BEEN REVN RELEASED 9-17-41

(J) NOTES:-
1. MATERIAL FOR -8 MAY BE:
(A) K778 X 1-3/4, 24ST AL. ALLOY EXTR, SPEC. QQ-A-354-T, OR
(B) K778 X 1-3/4, 14ST AL. ALLOY EXTR, SPEC. AN-A-8-T.

FINISH CODE	
Z	ANODIC TREATMENT
P	P-27 PRIMER
AP	ALUMINIZED PRIMER
C	CADMIUM PLATE

PART NO	STOCK	MATERIAL	SPEC.	LH SH REQ.	LH SUP REQ.	RH SH REQ.	RH SUP REQ.
AN526D01032-9							
AN442D6							
AN442D5							
AC365D8824							
AC365D1032							
AC365D428							
AN4DD18A							
AN5DD7A							
AN4DD7A							
28B5638-6				1		1	
28B5639				1		1	
28B5585-2				1		1	
-18	.064 X 11 7/8 X 5 3/16	ALCLAD	24ST-T	1		1	
-16	.125 X 1 3/4 X 3 1/4	ALCLAD	24ST-T	1		1	
-15R	.064 X 2 3/4 X 4 3/16	ALCLAD	24ST-T	1		1	
-15L	.064 X 2 1/2 X 3 1/16	ALCLAD	24ST-T	1		1	
-11	.064 X 11 7/8 X 5 3/16	ALCLAD	61S-T	1		1	
-10	K1362A X 5 3/8	AL. ALL. EXT.	24ST-T	1		1	
-9	NOTED	NOTED	NOTED	1		1	
-8	K691 A 2 3/4	AL. ALL. EXT.	24ST	1		1	
-7	.064 X 7 X 18 3/4	ALCLAD	24ST-T	1		1	

REQUIREMENTS PER AIRPLANE
REPLACES 2.5 BASIC QTY.
REPLACED BY ASSY. QTY.
SCALE: 6" = 1'-0"
PARTS LIST PER ASSY.

AC
NAVY SPEC #
HEAT TREAT
26-P-AP
FINISH
DRAFT: Fosco 9-14-41
CHECK
STRESS
WEIGHT
CAP. HAND

NAME INSTAL.-NULL-NOSE WHEEL DOOR - TORQUE TUBE STIFFENER.
CONSOLIDATED AIRCRAFT CORP. San Diego, Calif.
DWG. NO. 28B5637
SIZE G
REV

LET	ALTERATION	DATE	BY

LET	ALTERATION	DATE	BY
A	ON FACE OF DWG ADD ⅜ DIAG TO -7 1/16 DIA -7 .020 X 15/16 X 16 MAS .020 X 15/16 X 15/32 WT CHG NEG.	3/24/42	[illegible]
B	ADDED NOTE "WELD THIS EDGE ON -6" CHG MAT'L SPEC FOR -6 FROM ALCLAD 47A8-A TO AL ALLOY 47AII-TEMPER	3-13-42	[illegible]
C	CHGD DIRECTION OF LAP OF -6&-7 (NO WT. CHG)	3-13-42	[illegible]
D	ADDED 2ND DIM. (NO WT CHG.)	4-4-42	[illegible]
E	ADDED TO VIEW B-B 6 REMOVED FROM NOTE SPACED AS REQ'D - ⅜ (NO WT CHG)	8-14-42	[illegible]
F	SPEC. 47AII-TEMPER WAS 47A8-TEMPER FOR -6 IN B/M NO WT. CHG.	8-18-42	[illegible]
G	CHGD LAP JOINT TO BUTT JOINT ADDED -8 FOR SPLICE ADDED VIEW D-D. WT CHG NEG IN B/M -6, 10¾ WAS 10⅞	8-18-42	[illegible]

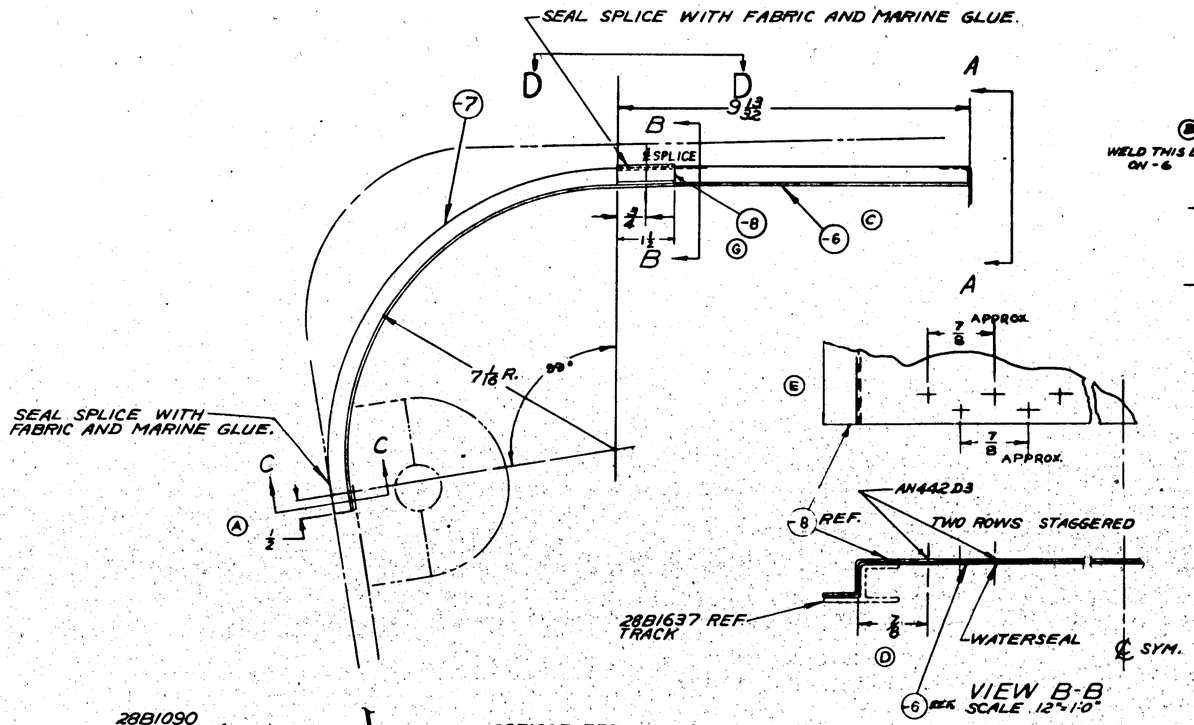

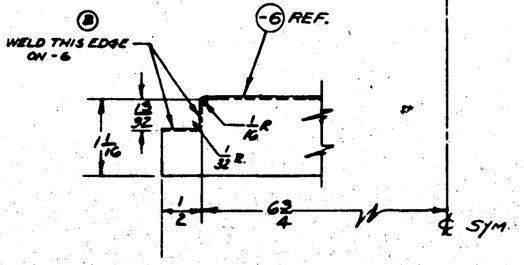

VIEW A-A
12"=1'-0"

VIEW B-B
SCALE 12"=1'-0"

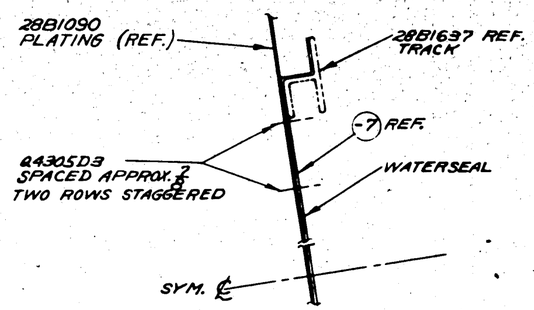

VIEW C-C
SCALE 12"=1'-0"

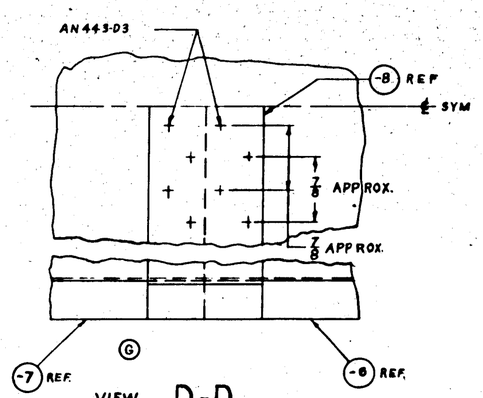

VIEW D-D
SCALE 12"=1'-0"

FINISH	
Z	BRODIE TREATM.
P	P-D PRIMER
AP	ALUMINIZED PRIMER
C	CADMIUM PLATE

THIS DWG. RUSH RELEASED 11-27-41

CONT. 9876 HULL 460 TON.

NOTE:
THIS INSTALLATION SHALL BE MADE ON THE FIRST PRODUCTION AIRPLANE ON WHICH PARTS ARE AVAILABLE FOR COMPLETE INSTALLATION.

ASSY DASH NO.	MODEL	NEXT ASSY	QTY
	28-BA(M,AP,P,C)105	28B105	1
	PBY-5	28B105	1
	PBY-5A	28B105	1
	PBY-5B	28B105	1

REQUIREMENTS PER AIRPLANE
REPLACES .5
REPLACED BY
ACT QTY
LIMIT ON DECIMALS UNLESS OTHERWISE SHOWN ON ± 1/32
SCALE 6"=1'-0" & NOTED
STAMP PART NUMBER WHERE SHOWN

PART NO	STOCK	MATERIAL	SPEC	LH REQ -0	RH REQ -2	LH REQ -3	RH REQ -4	LH REQ -5
	-8 .020 X 15/16 X 15/16	ALC 24ST	47A8-T	1				
	-7 .020 X 15/16 X 16	ALCLAD	47A8-A	1				
28B5645-4	.020 X 10 7/8 X 15/32	AL ALLOY	47AII-TEMPER		1			

PARTS LIST PER ASSY.

A.C. No. 50 SR-53 HEAT TREAT | Z-P FINISH

	DRAFT	CHECK	STRUCT	MAT	APPROV	ENG
TRACING	[illegible]	[illegible]	[illegible]	[illegible]	[illegible]	[illegible]
10-24-41	[illegible]	[illegible]	R		12-27-41	[illegible]

NAME INSTALL.-CASING-HULL-WINDOW COVER
CONSOLIDATED AIRCRAFT CORP. SAN DIEGO, CALIF.
OPP HAND
DWG G
SIZE 28B5645

LET	ALTERATION	DATE	BY	LET	ALTERATION	DATE	BY
	33417						
A	REMOVED FROM DWG. CARRIED ON PIC.						
B	ADDED SPOTFACE TO -6 CASTING						
	ADDED 1 PC. VIEW TO SIDE VIEW						
	CHG. LIMITS FROM MIXED TO 2 PL.						
C	SHT. 1 ADDED 1/4 DIA HOLE DRILL						
D	ON SHEET 2 & 3 ADDED AND MADE (REF.) TO DIM.						
	ADDED 1/4 DIA.						
E	MACHINED PART -DWG 2885664 WAS "MACHINED PART WITHOUT HOLES DRILLED" (NO LETTER)						
	ASSEMBLED TO LOOK LIKE PART						
F	ADDED (4) (1935) HOLES & LOC. DIM. 7/8, 1 1/2, 1 3/8 & 1 3/16						
	W.T. CHG. NEG'L						

E.O. A8793
E.O. A12267 PBY-5
E.O. A43548

FTG

3/8 R

FILE FINISH THIS SURFACE

SECTION B-B

-6 CASTING STAINLESS STEEL SPEC. 46527 GRADE I HEAT TREAT 70,000 #/□ IN.

-8 MACHINED PART FOR HOLE SIZE & LOCATION SEE DWG. 2885664

B

A B

SPOTFACE 1 1/4 DIA

8 3/4

5 3/8

4 3/8

1/4 DIA HOLE DRILL

AFTER SPOTFACING

2 11/16

2

1 3/16

1 1/16

3 5/32

5 1/16

10 (1935) (4) HOLES

CAST PART No. HERE

A

SECTION A-A

1 3/4 (REF.)

2 1/2

NOTE: SALES ORDER 93691 CONTRACT CHG'E"

NOTE — BREAK CORNERS

-8 PBY-5 28B5664.1

-6 NOTED NOTED NOTED

PART No	STOCK	MATERIAL	SPEC.	LH RH REQ. -0	LH RH REQ. -2	LH RH REQ. -3	LH RH REQ. -4	LH RH REQ. -5
PARTS LIST PER ASSY.								

ASSY DASH NO.	MODEL	NEXT ASSY	NO.
REQUIREMENTS PER AIRPLANE			
REPLACED		4.4 CALC WT	
REPLACED BY		ACT WT	
SCALE 12" = 1'0"			

STAMP PART NUMBER WHERE SHOWN

A.C. NAVY NOTED HEAT TREAT C-P-2GP FINISH

DRAFT	CHECK	STRUCT	WAT	APPROV	ENG
12-4-40 LFW SWEN	MJK				RJ

NAME FITTING-HULL-MOORING GEAR QUICK RELEASE

OPP HAND NONE

DWG G SIZE 28B5665

CONSOLIDATED AIRCRAFT CORP. San Diego, Calif.

LET	ALTERATION	DATE	BY	LET	ALTERATION	DATE	BY

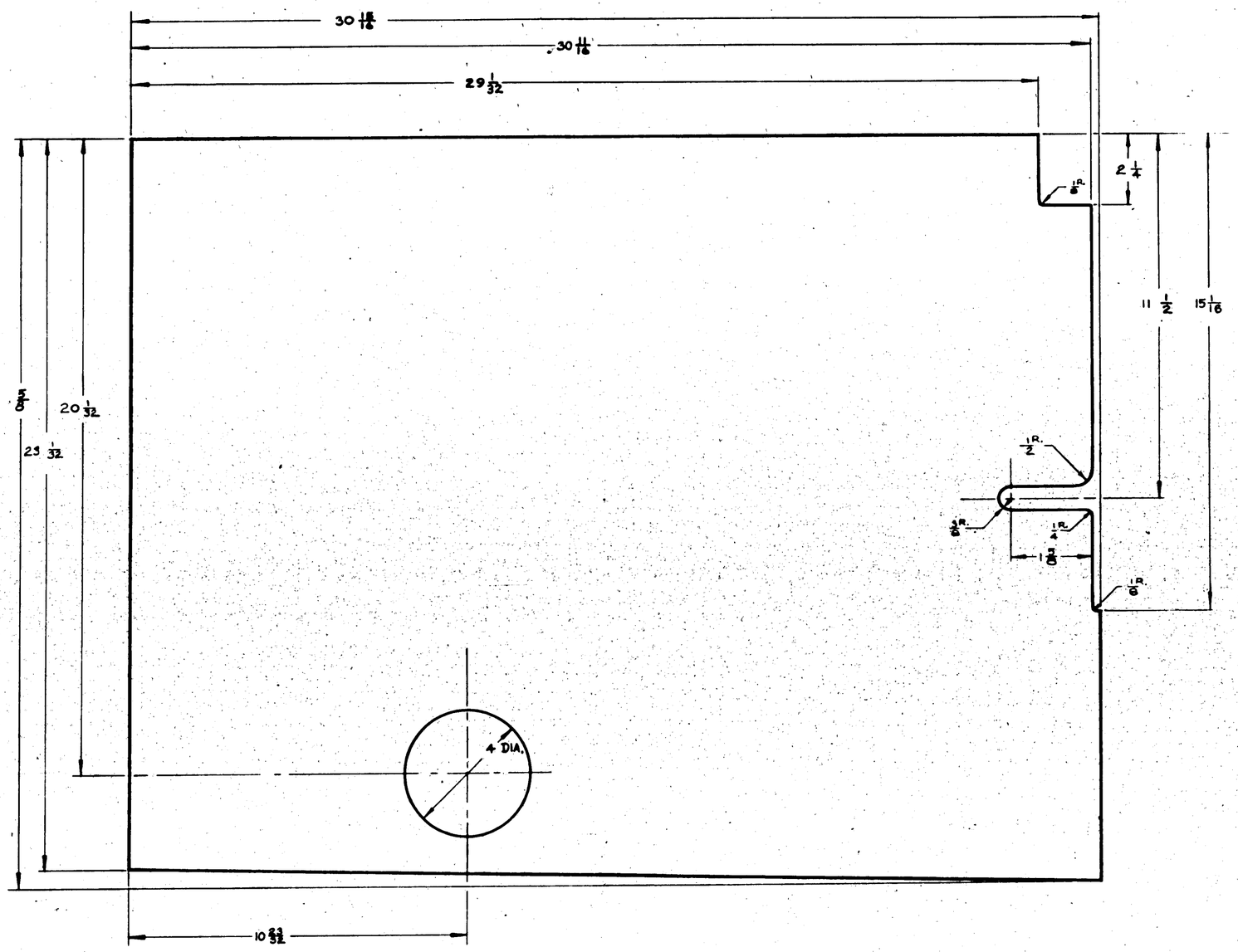

APPROVED FOR TOOLING BY
Gene 6/30-43

ARMY SHOP NO.	MODEL	NEXT ASSY.	REQ.
	PBY-5A	2885519	2

REQUIREMENTS PER AIRPLANE

REPLACES	4.65# Est. Wt.
REPLACED BY	Act. Wt.
LINE OR EQUIPMENT SYMBOL OR NOMENCLATURE: 1/32	SCALE: 6"=1'-0"
STAMP PART NUMBER WHERE SHOWN	

PART No	STOCK	MATERIAL	SPEC.	LH REQ.	RH REQ.	LH REQ.	RH REQ.	LH REQ.	RH REQ.
PARTS LIST PER ASSY.				-0	-2	-3	-4	-5	
	.064 x 3 1/16 x 23 3/4	ALCLAD	QQA362 T						

AC						
NAVY NONE	Z-P G-P	6-28-43	8-4-43			
HEAT TREAT	FINISH	DRAFT	CHECK	STRUCT	MAT.	APPROV	ENG

NAME WEB - AUX. KEEL STA 4 TO 5 FWD

CONSOLIDATED AIRCRAFT CORP. San Diego, Calif.

OPP. HAND

SIZE G | 28B5674

28B5674 R

LET	ALTERATION	DATE	BY	LET	ALTERATION	DATE	BY

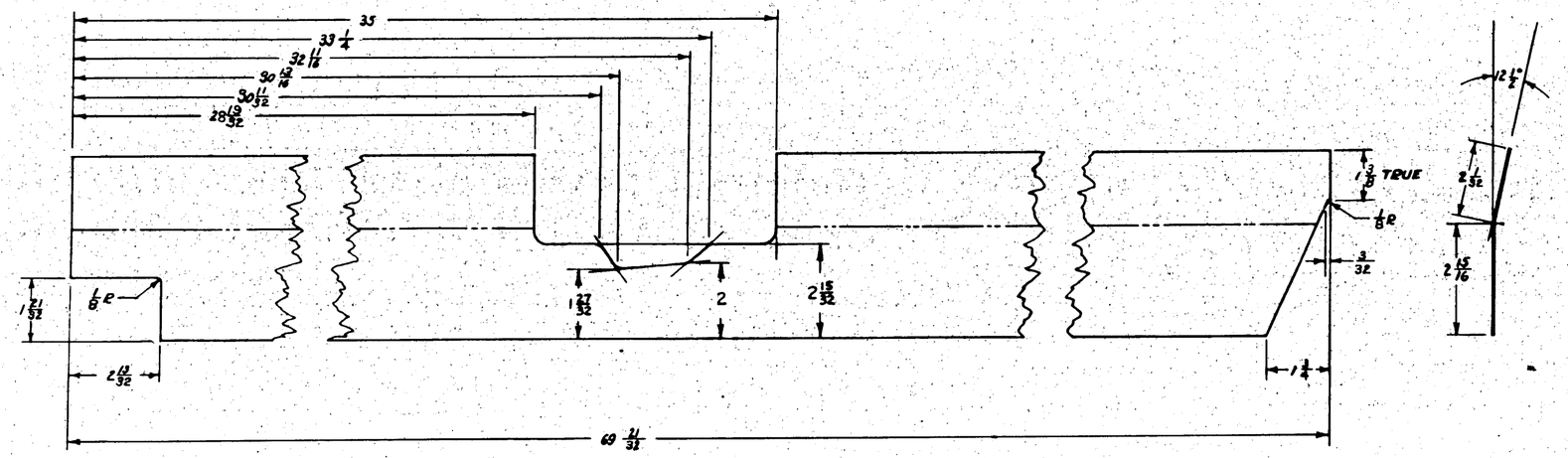

NOTE:
ALL RADII NOT SPECIFIED 3/8 R.

APPROVED FOR TOOLING BY
6/30-43

C-NO. A(1)444 #851 ON

LAST CHANGE NO.	MODEL	NEXT ASSY. NO.
R	PBY 5A	2885519
L	PBY 5A	2885519

REQUIREMENTS PER AIRPLANE

REPLACES	QUAN. PER
2885519-8 4/R	1.07
REPLACED BY	ASY. QTY.

LOFT OR ENGINEERING DRAWING NO. Y92 | SCALE 6" = 1'-0"
STAMP PART NUMBER WHERE SHOWN

PART NO	STOCK	MATERIAL	SPEC.	LH REQ.	RH REQ.	LH REQ.	RH REQ.	LH REQ.	RH REQ.	LH REQ.	RH REQ.
	.032 × 5 1/16 × 70	ALCLAD	QQ A362Y								
PARTS LIST PER ASSY.				-0		-2		-3		-4		-5	

A C
NAVY NONE | E-P-GP
HEAT TREAT | FINISH

	HYMAN					
	6-25-43					
	DRAFT	CHECK	STRUCT	MAT.	APPROV.	ENG

NAME PLATE - AUX. KEEL TO SHEAR WEB SPLICE
CONSOLIDATED AIRCRAFT CORP. SAN DIEGO, CALIF.

OPP. HAND 28B5676 R
DWG. G
DWG. 28B5676

28B5676 R

LET	ALTERATION	DATE	BY
A	TOLERANCE ADDED E.&W. WELL 2 PLS.	4/8/41	[illegible]
	A-0004 RELEASED NOTE.		
B	FINISH CAT REMOVED "AL. ALLOY."		
	"46 N CL 4 TYP 29,000 P.S.I."		
	ADDED "NOTED" TO FACE ADDED		
	MATERIALS NOTE. "NO WT. CHG. B/SH. HOOK"		

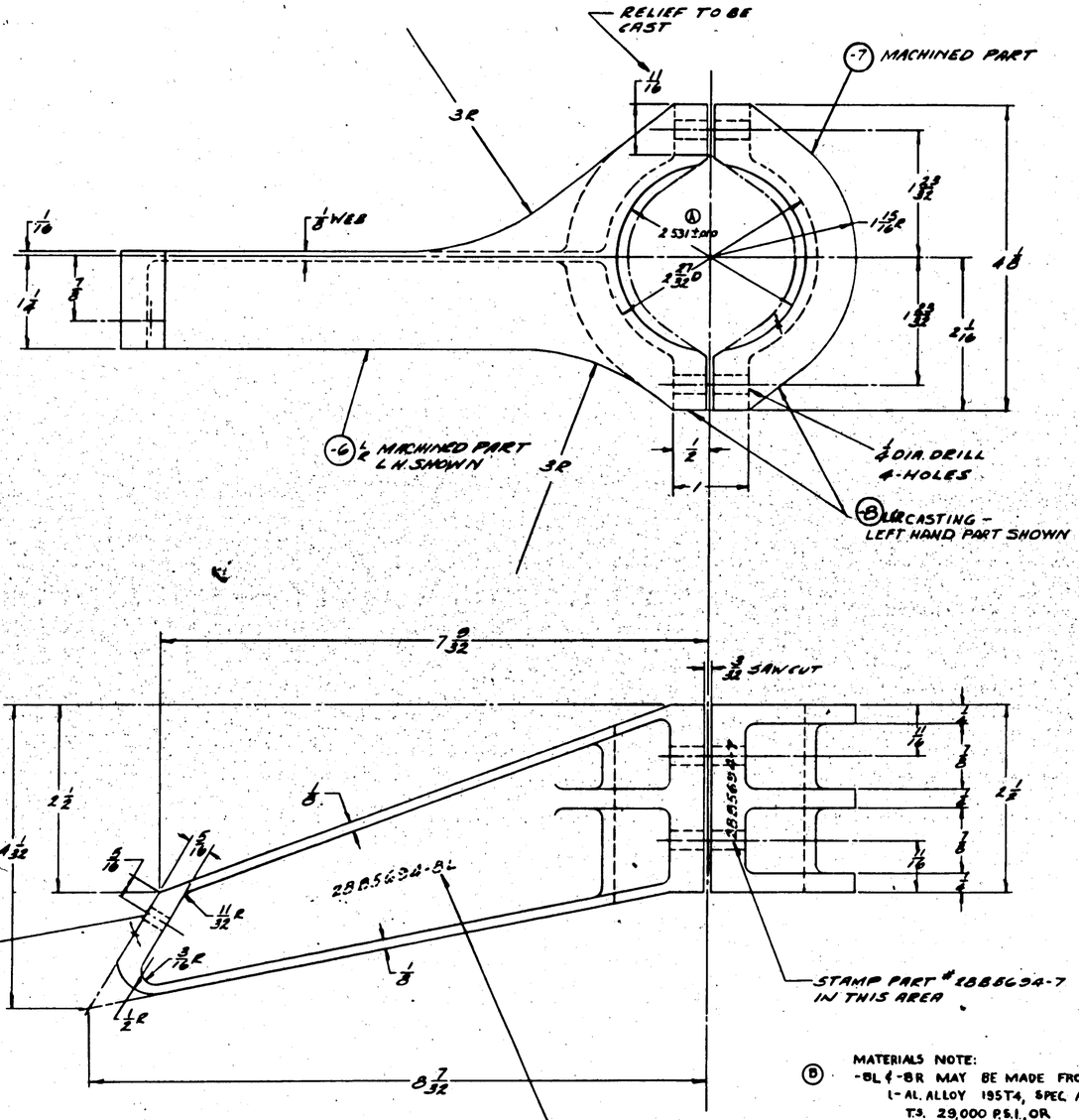

Ⓑ MATERIALS NOTE:
-8L & -8R MAY BE MADE FROM:
1- AL. ALLOY 195T4, SPEC. AN-QQ-A390 CL.I, T.S. 29,000 P.S.I., OR
2.- AL. ALLOY 5195T6, SPEC. AN-A-8 CL.II, T.S. 32,000 P.S.I.

NOTE:-
ALL RADII TO BE 1/8 UNLESS OTHERWISE SPECIFIED. BREAK ALL SHARP CORNERS WITH 1/64R.

FINISH CODE

Z	ANODIC TREATMENT
P	A-17 PRIMER
AP	ALUMINIZED PRIMER
C	CADMIUM PLATE

-8	28-SAPH	28B5694	1
-8L	28-SAMH	28B5694	1
-8L	SR-8 AMC	28B5694	1
-8L	CR-10	28B5694	1
-8L	PRT-SR	28B5694	1
-8R	28-SAMC	28B5694	1
-8R	CR-10	28B5694	1
-8R	PRT-SR	28B5694	1
-8L	SR AMC	28B5694	1
-8L	CR-10	28B5694	1
-8L	PRT-SR	28B5694	1

ASSY DRAW. NO.	MODEL	NEXT ASSY	QUAN.
REQUIREMENTS PER AIRPLANE			
REPLACES		1.26 Orig. QTY	
REPLACED BY		ADV QTY	

SCALE: 1/32 — 12" = 1'

STAMP PART NUMBER WHERE SHOWN

-8	CASTING	NOTED	NOTED
-8L	CASTING	NOTED	NOTED
-7			
-8L	MACH. FROM -8		

PART No.	STOCK	MATERIAL	SPEC.	LH REQ.	RH REQ.	LH REQ.	RH REQ.	LH REQ.	RH REQ.
PARTS LIST PER ASSY.				-0	-2	-3	-4	-8	

A.C. — NAVY NOTED — HEAT TREAT — 2-P-AP — FINISH

	DATE	BY
DRAFT	4-9-41	L.C.S.
CHECK		STRIGHT
DAY.		
APPROV.		
ENG.		

NAME BRACKET-MAN WHEEL WELL DOOR CONTROL

CONSOLIDATED AIRCRAFT CORP. San Diego, Calif.

CAT. NUMB. 28B5694

DWG. G

SIZE

28B5694

R

LET	ALTERATION	DATE	BY	LET	ALTERATION	DATE	BY
A	-6 REDRAWN ADDED DIM -8						
	CHANGED DIM -14	2-25-44	[illegible]				
B	-6L,R REPLACED BY -16L,R; -9L,R,-13L,R, REPLACED BY -17L,R; -14L,R, REPLACED BY -18L,R; -10L,R, REPLACED BY -19L,R; -7L,R REPLACED BY -20; -11L,R, REPLACED BY -21; -15L,R, REPLACED BY -22; -16L,R ADDED; HOLES REMOVED FROM -8L,R DRILL NOTE ADDED.	4/24/44	[illegible]				

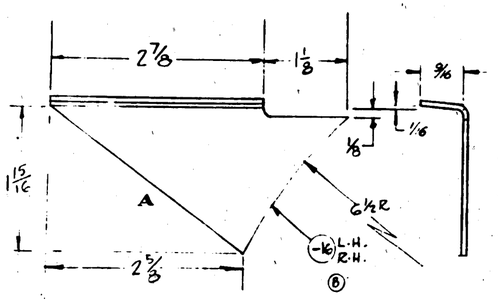

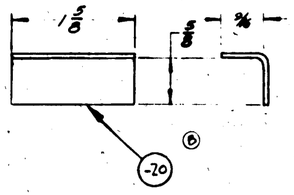

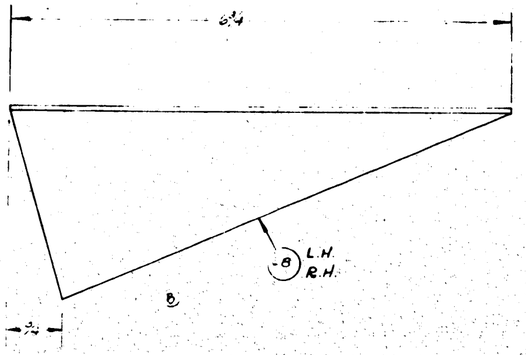

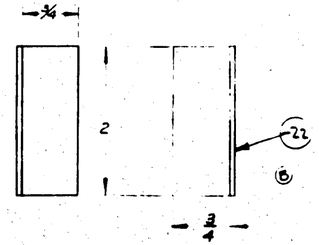

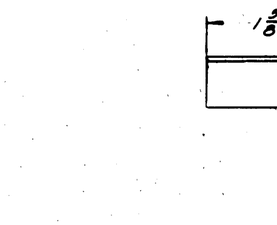

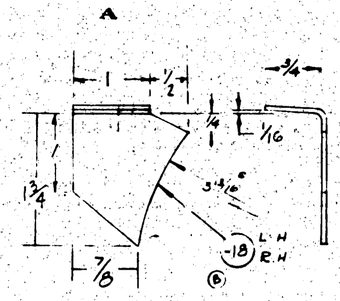

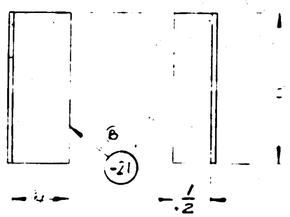

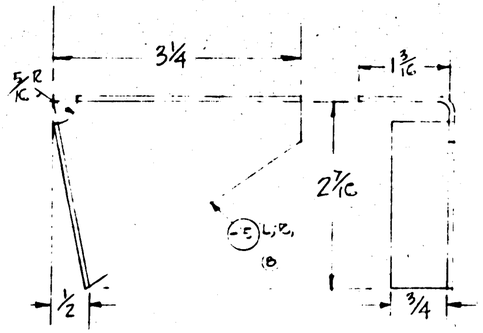

NOTE: THESE PARTS ARE NOT TO BE DRILLED UNTIL INSTALL IN SHIP

1/8 RADII UNLESS STATED OTHER-WISE.

FINISH	
Z	ANODIC TREATMEN
P	P-27 PRIMER
AP	ALUMINIZED PRIMER
C	CADMIUM PLATE

DASH NO.	WEIGHT IN POUNDS
-16	.036
-20	.011
-8	.094
-17	.019
-19	.011
-18	.019
-21	.013
-22	.015
-15	.056

S.O. #936-53

PART No	STOCK	MATERIAL	SPEC.	LH REQ -0	RH REQ -2	LH REQ -3	RH REQ -4	LH REQ -5	RH
-22	.064 x 1 3/16 x 2 1/8	ALCLAD	47-AB T						
-21	.064 x 2 1/4 x 1 1/2		47-AB T						
-20	.064 x 1 1/4 x 1 3/8		47-AB						
-15R	.064 x 1 5/8 x 1 1/4		47-AB						
-15L	.064 x 1 5/8 x 1 1/4		47-AB						
-19R	.064 x 1 5/8 x 2 3/4		47-AB						
-19L	.064 x 1 3/4 x 2 1/4		47-AB						
-17R	.064 x 2 1/4 x 2 3/4		47-AB						
-17L	.064 x 2 3/4 x 2 1/4		47-AB						
-16R	.064 x 2 3/4 x 4 1/4		47-AB						
-16L	.064 x 2 3/4 x 4 1/4		47-AB						
-18R	.064 x 3 7/8 x 4 1/4		47-AB						
-18L	.064 x 3 7/8 x 4 1/4		47-AB						
-8R	.064 x 3 1/4 x 6 1/8		47-AB T						
-8L	.064 x 3 1/4 x 6 1/8	ALCLAD	47-AB T						

PARTS LIST PER ASSY.

ASSY DASH NO.	MODEL	NEXT ASSY	USED
-22	PBY-5	28U5071	2
-21	" -5	"	2
-20	" -5	"	2
-15L,R	PBY-5	"	1 EA
-19L,R	PBY-5	"	1 EA
-18L,R	PBY-5	"	1 EA
-17L,R	PBY-5	"	2 EA
-16L,R	PBY-5	"	1 EA
-8L,R	PBY-5	28U5071	1 EA

REQUIREMENTS PER AIRPLANE

	NOTED
REPLACES	CALC. WT.
REPLACED BY	ACT. WT.

SCALE: 12"=10" — STAMP PART NUMBER WHERE SHOWN

A C		Unless Noted					
NAVY - R-537	Z-P-AP	1:41	[illegible]		F.R.F.		
HEAT TREAT	FINISH	DRAFT	CHECK	STRUCT	MAT	APPROV	ENG

NAME: BRACKET - ARMOR PLATE - FUEL SUMP

OPP HAND

CONSOLIDATED AIRCRAFT CORP. San Diego Calif.

DWG G SIZE 28B5695

LET	ALTERATION	DATE	BY	LET	ALTERATION	DATE	BY

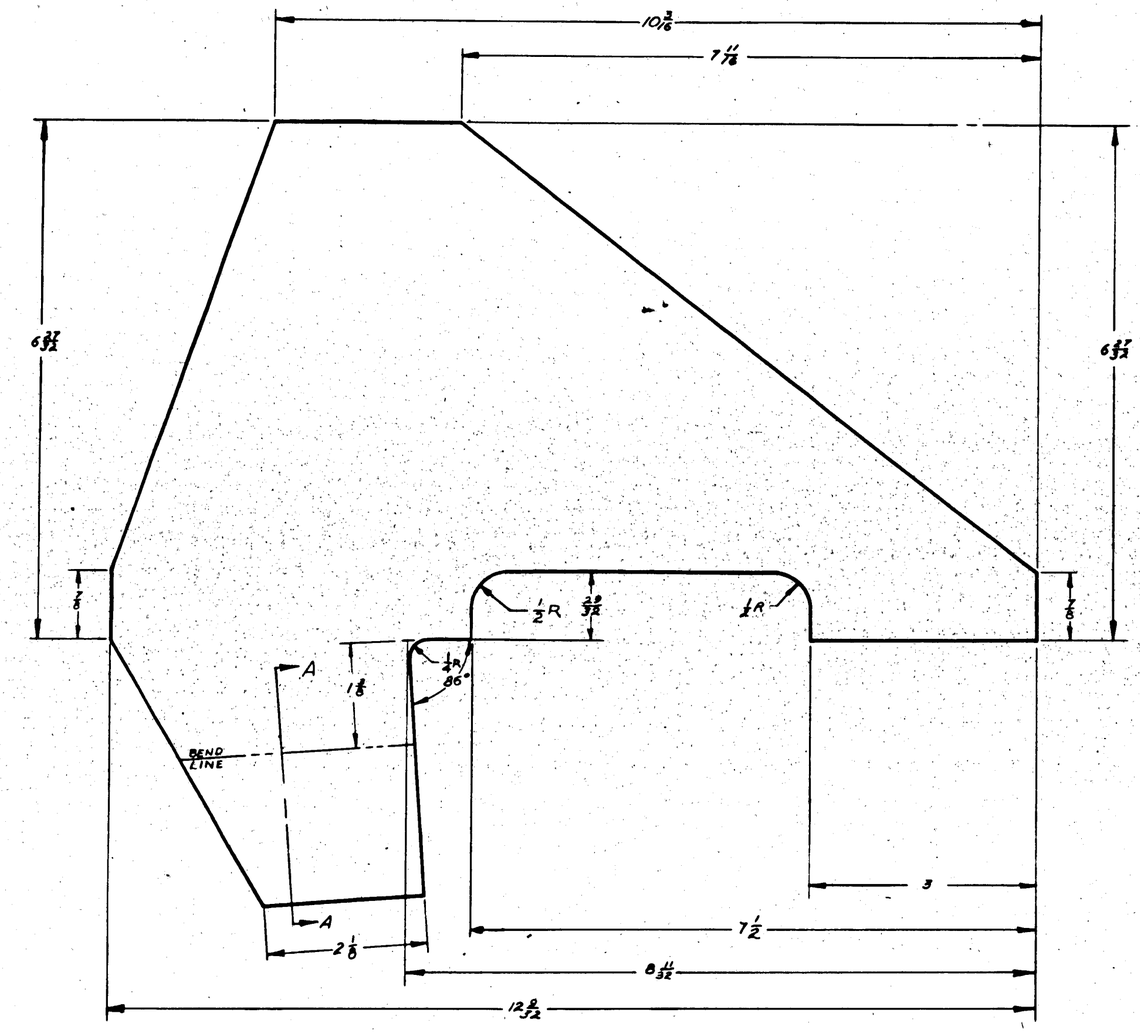

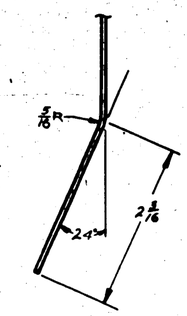

SECTION A-A

APPROVED FOR TOOLING BY
8-5-43

M.C.R #299

ASSY QUAN PER	MODEL	NEXT ASSY.	QUA.
-R	PBY-5A	28855901	1
-L	PBY-5A	28855902	1

REQUIREMENTS PER AIRPLANE

REPLACES	ART. NO.	QUA. PER
28855590-95		57
REPLACED BY		ART. QTY

Limit Dimensions Unless Otherwise Specified	SCALE
± 1/32 ± 1°	12 1/2 : 1 0"

STAMP PART NUMBER WHERE SHOWN

PART NO	STOCK	MATERIAL	SPEC.	LH REQ. -0	RH REQ. -2	LH REQ. -3	RH REQ. -4	LH REQ. -5	RH REQ.
	.072 X 10 3/16 X 12 3/16	ALCLAD	QQA362-T						

PARTS LIST PER ASSY.

A C			SHAPE			
NAVY NONE	ZP-GP	7-21-43	E-13		9-1-43	
HEAT TREAT	FINISH	DRAFT	CHECK	STRUCT	MAT	APPROV	ENG

NAME GUSSET - HULL BLKH'D STA #5.0 COLUMN ATTACH

OPP. HAND 28855713 R

CONSOLIDATED AIRCRAFT CORP. SAN DIEGO, CALIF.

DWG. G SIZE 28855713

R 28855713

LET	ALTERATION	DATE	BY	LET	ALTERATION	DATE	BY
A	REMOVED -7 (2) FROM B/M & FACE OF DWG. REMOVED AN 442 D4 FROM B/M & FACE OF DWG. REMOVED DIM. 1, 2 3/8, 1 9/16 & 1 3/8. REMOVED NOTE "USE OF --- OPTIONAL". WT. .45" WAS .49"						

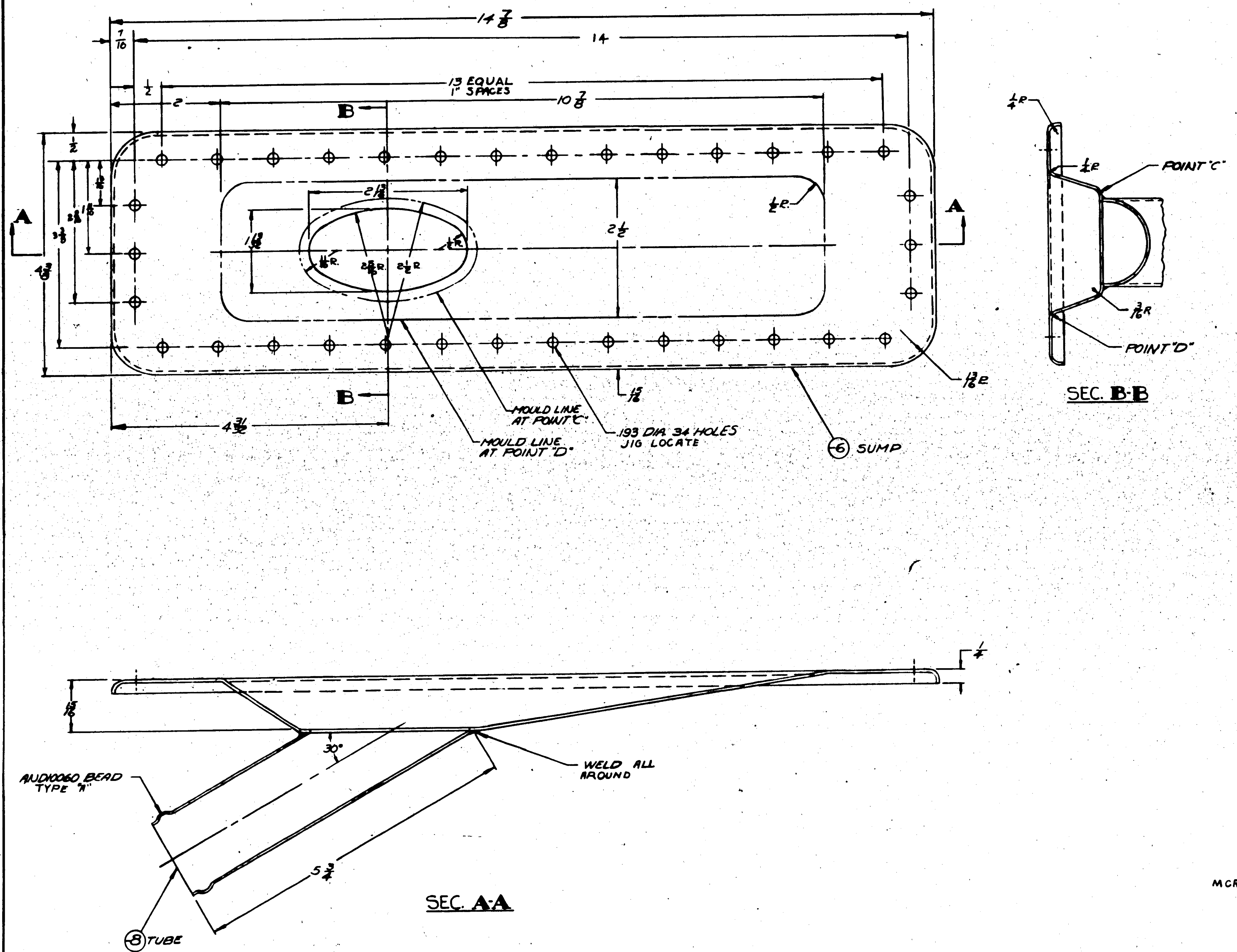

MCR 272-A-1

APPROVED FOR TOOLING BY
F. HOWARTH 9/10/43

PART No	STOCK	MATERIAL	SPEC.
-8	.049 X 1 1/2 O.D. X 6		
-6	.051 X 6 X 16 1/2	AL. AL. SHT.	11-A

PARTS LIST FOR ASSY. -0

SCALE 1/2" = 1'-0"

WT .45

[redacted]

HEAT TREAT NONE

FINISH ZP-2GP

NAME: SUMP ASSY BOMBERS WINDOW SHUTTER HOUSING DRAIN.

CONSOLIDATED AIRCRAFT CORP.

28B5801

LET	ALTERATION	DATE	BY	LET	ALTERATION	DATE	BY

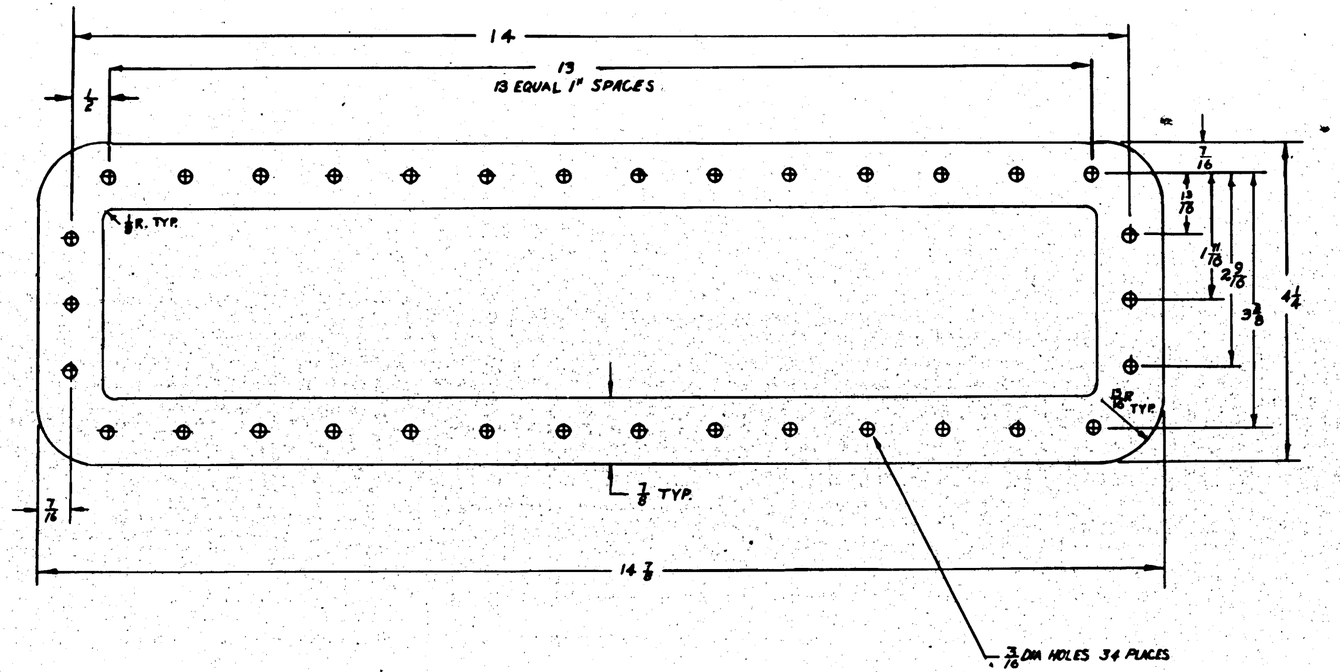

NOTE:
MAKE FROM GENERAL USE SYN RUBBER
CVAC SPEC. ZM-048 TYPE III GRADE A

MCR 272A-1

APPROVED FOR
TOOLING BY
J. Howard
9/10/43.

PART NO.	1/8 X 14 1/16 X 14 7/8	MOTOR	MATERIAL	SPEC.
	STOCK			

PARTS LIST PER ASSY.

LIST	REQ'D	REQ'D	REQ'D	REQ'D	REQ'D	REQ'D
	-0	-2	-3	-4	-5	

60	NONE		
HEAT TREAT	FINISH		

NAME GASKET - BOMBERS WINDOW SHUTTER HOUSING DRAIN SUMP

CONSOLIDATED AIRCRAFT CORP. San Diego, Calif.

SIZE G | DWG. NO. 28B5802

SUB. STAND. NONE

R 208588

LET	ALTERATION	DATE	BY	LET	ALTERATION	DATE	BY

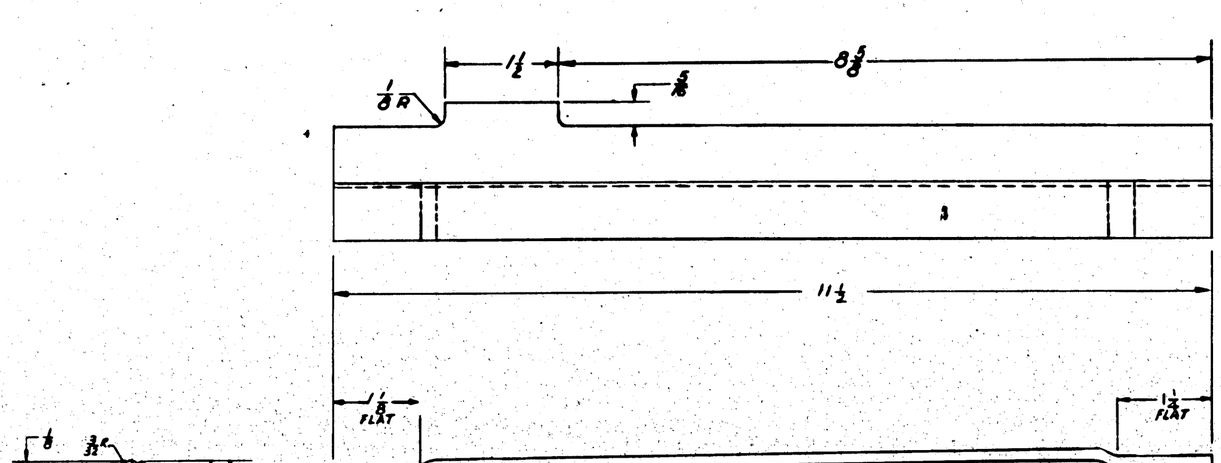

JOGGLE .051

JOGGLE .102

MCR #272 A-1

WT.	
L	.187
R	.281

APPROVED FOR TOOLING BY
F. Howard
9/10/43

-R	PYLON	2885806	1	
-L	PYLON	2885806	1	
ITEM DASH NO.	MODEL	PRINT ASSY.	QTY.	

REQUIREMENTS FOR AIRPLANE

REPLACED	AIRFRAME SERIAL NO.
REPLACED BY	DATE WITHDRAWN
LOCATION REFERENCE ON AIRPLANE	SCALE 12" = 1'0"

PART No	STOCK	MATERIAL	SPEC.	LH RH REQ.	LH RH REQ.	LH RH REQ.	LH RH REQ.	LH RH REQ.
	.064 x 8 x 113/4	24 ALCLAD SHEET	4TA10-T					
PARTS LIST PER ASSY.				-0	-2	-3	-4	-5

A C
NAVY NONE
HEAT TREAT
Z P2G P
FINISH
9-1-43
DRAFT

NAME LONGERON - BOMBER'S WINDOW SHUTTER HOUSING OUTBOARD

CONSOLIDATED AIRCRAFT CORP. SAN DIEGO, CALIF.

CAT. NUMBER 2885806-R-1

SIZE G

DWG 2885806

R 9085882

LET	ALTERATION	DATE	BY	LET	ALTERATION	DATE	BY

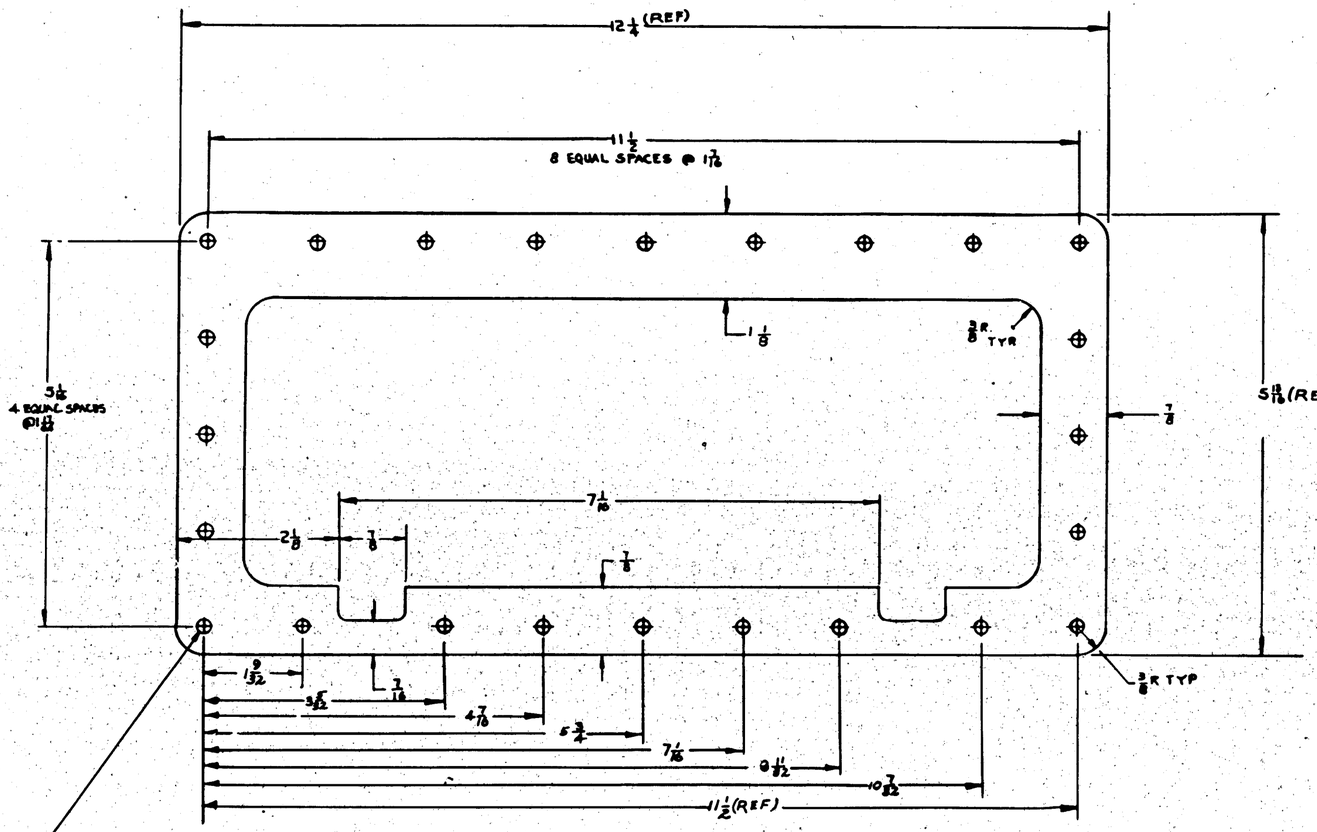

NOTE:
MAKE FROM GENERAL USE
SYNTHETIC RUBBER (VAC
SPEC. ZM-048 TYPE II GRADE A.

MCR #272A-1

APPROVED FOR TOOLING BY
J. Howard
9/10/43

LAST EACH SER. NO.	PBY-5A	28B5820	1
	MODEL	PART ASSY NO.	NOS.
REQUIREMENTS PER AIRPLANE			
REPLACED		12 (Ord. Wt.)	
REPLACED BY		(Adv. Wt.)	
Latest Rev. Requirements Engineering Drawing	SCALE	12"=1'0"	
STAMP PART NUMBER WHERE SHOWN			

PART NO	STOCK	MATERIAL	SPEC.	LH REQ.	RH REQ.	LH REQ.	RH REQ.	LH REQ.	RH REQ.	LH REQ.	RH REQ.
	1/16 X 5 1/16 X 12 1/4	NOTED	NOTED								
PARTS LIST PER ASSY.				-0		-2		-3		-4	

A C					
NAVY NONE	NONE				
HEAT TREAT	FINISH	DRAFT	CHECK	STRUCT	ENG

NAME GASKET- BOMBER'S WINDOW SHUTTER OPERATING MECHANISM HOUSING

CONSOLIDATED AIRCRAFT CORP. San Diego, Calif.

OPP. HAND NONE

DWG. G 28B5812

R 2185882

LET	ALTERATION	DATE	BY
F	TRACED UP TO DATE :-	5-3-37	WEB
G	ADDED -6-7 SUB ASS'YS (PBY-2)	1-3-38	BCM
H	CHG'D. MAT'L. OF -4 ARM'S	6-23-39	
	-24ST SPEC. 44T28 B (TST USE 44T2)		
J	Q816-05-85 WAS Q816-05-7	7-28-39	
K	AN960D416 WAS AN960D416L	8-30-40	
L	REVISED NOTE "FOR PBY-1 & A"	11-4-40	
	CHG. ALL AN960-416 TO AN960D416	"	"
M	ADDED BUTT JOINT NOTE &	10/24/41	WELDON
	MIN. EDGE DIST. AT BOLTS 3/8		
N	AN425-D4 WAS AN425-D3	10/24/41	WELDON
O	INSERTED AN4-D8E & AN24-31 BOLTS	7/28/42	WELDON
	TRIM FWD SIDE OF ASSEMBLY		
P	CREATED -50 ASS'Y, Q899-10-7		
	WAS Q816-10-6 (NO WT CHG)	8-19-42	
Q	REPLACED BOMB WITH "REAR -7 SUB ASSY [18 1/2 FOR -9 SUB ASS'Y		
	ALSO "18 FOR -6 SUB ASS'Y [14 1/2		
	ADD -6 SUB ASS'Y (NT CHG WGT)	8-19-42	
R	-24-9-1 1/2 O.D. X .049 WAS 1 1/2 O.D. X		
	.042, -4-1 5/8 O.D. X .049 24ST SPEC.		
	44T28 WAS 1 5/8 O.D. X .065 17ST SPEC.		
	44T21 "SWAGE I.D. -- 1.580 +.000 -.010		
	WAS "REAM I.D. FOR PUSH FIT ON		
	1 1/2 DIA. TUBE" (WT. 3.6 WAS 3.0)	7-4-42	
S	AN4D4-21 (H) WAS AN4D4-20	7-7-42	
T	-5 SPACER DIA. 1.125 +.010 -.000 WAS		
	1 1/16 +.000 -.004 WT CHG NEG.	1-13-43	
U	THE FINISH FOR -2, -3, -4;		
	INSIDE IS Z-P-16P, WAS		
	Z-ANV; OUTSIDE IS Z-P-16P		
	WAS Z-9AKV. ALSO IN -4		
	NOTE 1510 +.005 -.010 WAS 1500 +.005 -.010	4-13-43	ADLER

C.O. #3054

E.O. 10413

E.O. 15363

E.O. 26080

E.O. #21885B

E.O. #28272

E.O. A95446

E.O. B 2640

(R) (A) SLEEVE 1 5/8 O.D. x .049 24ST AL. ALLOY TUBE - SPEC. 44T28A COND T. SWAGE I.D. FOR PUSH FIT TO 1.510 +.005 -.010 (H)
FINISH - OUTSIDE - Z-P-16P
INSIDE - Z-P-16P (U)

3/32 DRILL THRU TUBE & SPACER. CT'SK. .78" x .168 DIA. BOTH SIDES AC 425-D4 RIVET (N)

(O) REAM .252 .250 THRU FOR PBY-1 REAM .2505 .249 THRU FOR PBY-2
AN24-31
AN960-416
AN320-4
AN380-2-2

F (.257) DRILL THRU AN442-D8 RIVET

28C054-CLEVIS

(M) BUTT JOINT IS NOT NECESSARY BETWEEN TUBE & TERMINALS AT ENDS

REAM .252 .250 THRU
AN4D4-21 (S) (K)
AN960D416
AN310-D4
AN380-2-2

(2) (R) 1 1/2 O.D. x .049 AL. ALLOY TUBE SPEC 44T28 COND T
FINISH: - OUTSIDE - Z-P-16P (U)
INSIDE - Z-P-16P

22C016 CLAMP -0 ASS'Y
28C6028 CLAMP -50 ASS'Y (P)

(3) (R) 1 1/2 O.D. x .049 AL. ALLOY TUBE SPEC 44T28 COND T
FINISH: - OUTSIDE - Z-P-16P (U)
INSIDE - Z-P-16P

22C016 CLAMP -0 ASS'Y
28C6028 CLAMP -50 ASS'Y (P)

(O) REAM .252 .250 THRU
AN4D4-21 (S) (K)
AN960D416
AN310-D4
AN380-2-2

BUTT JOINT IS NOT NECESSARY BETWEEN TUBE & TERMINAL AT ENDS (M)

F (.257) DRILL AN442-D8 RIVET

28C054 CLEVIS

AN442-D5-RIVET (-0 ASS'Y ONLY) (P)

Q816-D5-85 SPACER (-0 ASS'Y ONLY) (P)

28C021-7 ASS'Y (SEE B/M) (Q)

REAM .375 .365 Q600-10-4 BUSHING (-0 ASS'Y ONLY) (P)

REAM .375 .365 Q600-10-4 BUSHING (-0 ASS'Y ONLY) (P)

(M) BUTT JOINT BETWEEN -2 & -3 IS NOT NECESSARY AT SPLICE OF -2 & -3

AN442-D5 RIVET (-0 ASS'Y ONLY) (P)

Q816-D5-85 SPACER (3) (-0 ASS'Y ONLY) (P)

28C021-6 ASS'Y (SEE B/M) (Q)

18 FOR -7 SUB ASS'Y. 14 1/2 FOR -9 SUB ASS'Y. (Q)

18 FOR -6 SUB ASS'Y. 14 1/2 FOR -8 SUB ASS'Y. (Q)

292 3/32

292 3/32

586 15/16

CHAMFER 1/32 x 45°

1 25/64 +.010 -.000

4 1/2

5/16 5/8

(5) SPACER
AL. ALLOY BAR SPEC. 46A5 COND T
FINISH Z-P-16P

(M) MIN. EDGE DIST AT BOLTS 3/8

ALL AL. ALLOY SHEET SPEC. 47A10 (CONDITION T) ALLOY 24T EXCEPT AS NOTED
ALL AL. ALLOY EXTRUSIONS SPEC (CONDITION T) ALLOY 24T EXCEPT AS NOTED
HEAT TREAT ALL CONDITION A MATERIAL PER SPEC. SR63
RIVETS AL ALLOY EXCEPT AS NOTED

28C6028					
AN960-D416	4	4			
AN960-416	4	4			
AN4D4-21	2	2			
Q600-10-4	2	2			
Q816-D5-85	2	2			
28C054	1	1			
22C016	1	1			
-5	1	1			
-6	1	1			
SUB ASS'YS	-7	-9			
28C6028	1				

-50	28-5AMM	28C5750	1	AN442-D5	2		
-50	PBY-5B	28C3500	1	AN442-D8	2	2	
-50	PBY-5A	28C3564	1	AN380-2-2	2	2	
-50	PBY-5	28C5086	1	AN310-D4	2	2	
-0	28-5MA,MC	28C5750	1	AN960D416	2	2	
-0	PBY-5A	28C3700	1	AN4D4-21	2	2	
-0	28-5MA,MC	28C5500	16A	Q600-10-4	2		
-0	28-5ME,MC	28C5500	8A	Q816-D5-85	2		
-0	PBY-5	28C5000	1	28C054	1	1	
-0	PBY-4	28C2000		22C016	1	1	
-0	PBY-3	28C2000	-5		1	1	
-0	PBY-2	28C2000	-6	SUB ASS'YS	-7	-8	
-0	PBY 1	28C1000		28C021-7	1		
-0	XPBY-1	28C001		28C021-6	1		
				28C021-5	1		
				28C021-4	1		

C88476
C91876
C70496 & C77713
C70496

FINISH CODE	
Z	ANODIC TREATMENT
P	PZT PRIMER
GP	GREEN PRIMER
C	CADMIUM PLATE

REPLACES	XC20	5-3-37	O.H.	MODEL	NEXT ASSY
REPLACED BY	APPROVED	DATE	13	28C5750	28C5086
	SHT WT	ACT WT	SCALE 12"=1'0"		
	A.C.		NAVY NOTED		
	MATERIAL				
	CONSOLIDATED AIRCRAFT CORP BUFFALO, NY				

REQUIREMENTS PER AIRPLANE			PARTS LIST PER ASSY
MAT			
NOTED	NOTED	NOTED	
SPEC	HEAT TREAT	FINISH	

DRAWN D.T.N. TRACED H.P. CHECKED 6-6-37 STRESS CHECK STRAIN ENG

TUBE-CONTROL-AILERON PUSH & PULL ASSEMBLY

SIZE G 28C021. REV R

120293

SUPPLIES & EQUIPMENT CLASSIFICATION			
LET	ALTERATION	DATE	BY
G	TRACED	8-4-37	[illegible]
H	AN6D36 WAS AN6D37	1-7-38	[illegible]
J	AN 960-416 WAS AN 960-816	10-30-40	[illegible]
K	AN4-7 WAS AN4-10 (BRACES) ✓		
	AN4-12 WAS AN4-11	12-2-40	[illegible]

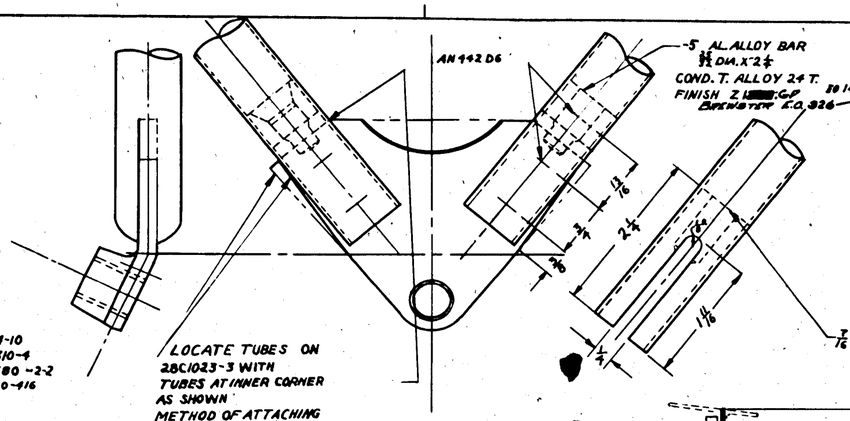

LOCATE TUBES ON 28C1023-3 WITH TUBES AT INNER CORNER AS SHOWN
METHOD OF ATTACHING TUBES TO PLATES 28C1023-21-3
SCALE 12"=1'-0"

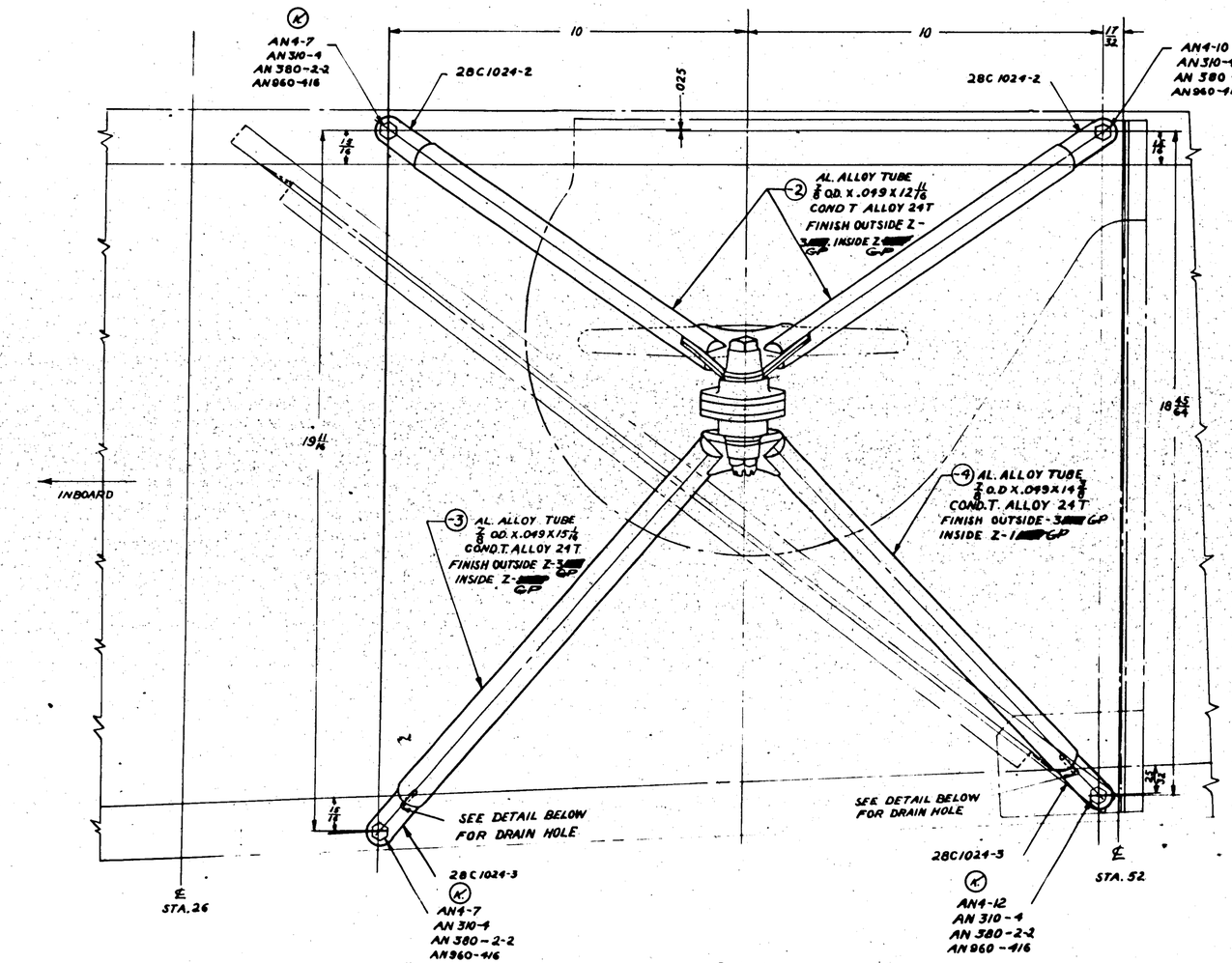

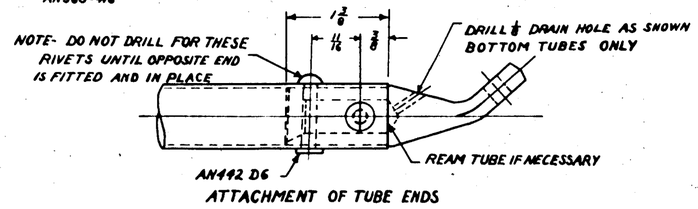

ATTACHMENT OF TUBE ENDS
SCALE 12"=1'-0"

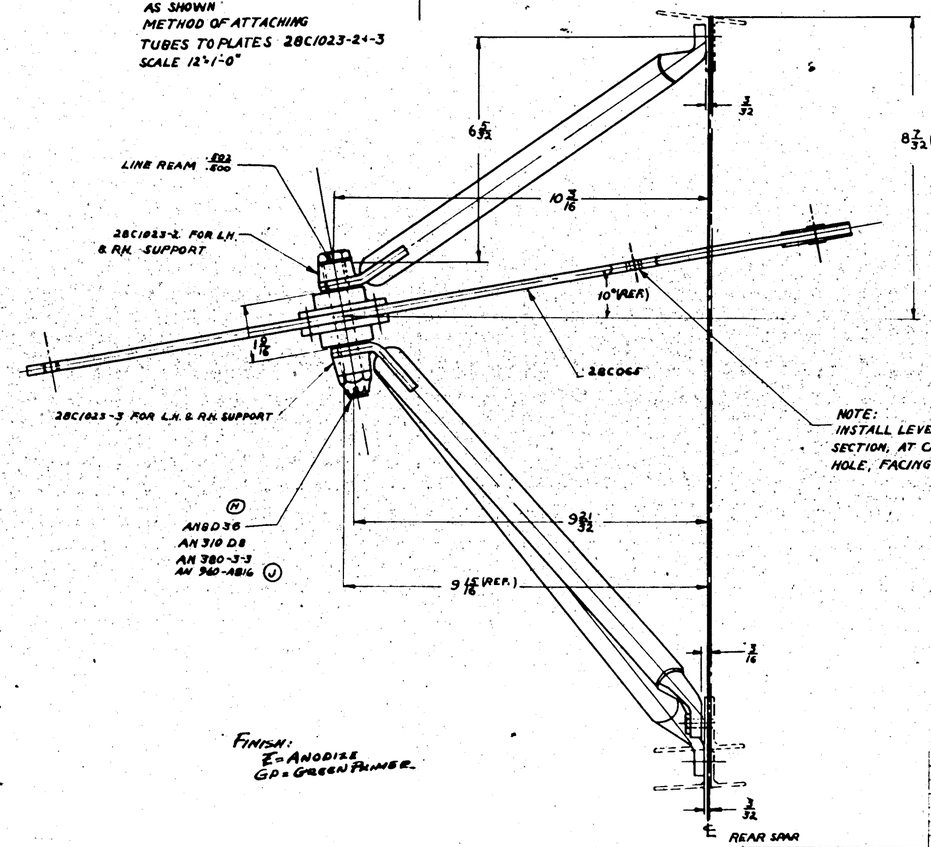

FINISH:
Z=ANODIZE
GP=GREEN PRIMER.

28C022 L.H. INSTALL AS SHOWN.
28C022-1 RH. INSTALL OPPOSITE.

| | | |

C.06889

SUPPLIES & EQUIPMENT CLASSIFICATION			
LET	ALTERATION	DATE	BY
F	TRACED "H" TO DATE	4-8-37	
G	11/16 WAS 3/4 WAS 5/8 WAS 3/8	11-10-37	
H	REMOVED "FINISH TO SUIT 28C0102"	1-24-38	
	ADDED MACHINING DIMEN.	" "	"
	PBY-2,3,3 NEXT ASSY WAS 28C012	" "	"
I	REMOVED(-2) PARTS FOR PBY-1, PBY-2	2-10-38	
	PBY-3 & PBY-4, ALSO 6612-8-10 AND	"	"
	6612-8-6 PARTS USED ON -8 ASSY.	"	"
J	DIM 2 1/4 WAS 2 3/8	2-28-38	
K	[illegible]	4-14-38	
L	INCREASED WEBS TO 5/16 - WERE 3/8	12-2-38	
	ADDED VIEW C-C & CUTOUT		
	INCREASED FILLET ON WEBS		
M	REMOVED TOP & BOTTOM		
	MTG. FLANGES OF G STIFF.	COMPLETED	
	REMOVED THICKNESS DIM OF		
	FLANGE - WAS 3/8 REMOVED		
	WIDTH DIM. OF FLANGE - WAS		
	1 5/8" AT TOP & 1 1/2" AT BOTTOM		
	CHG'D OVERALL DIM - WAS 3 1/2		
	AT TOP & 2 3/8 AT BOTTOM	COMPLETED	

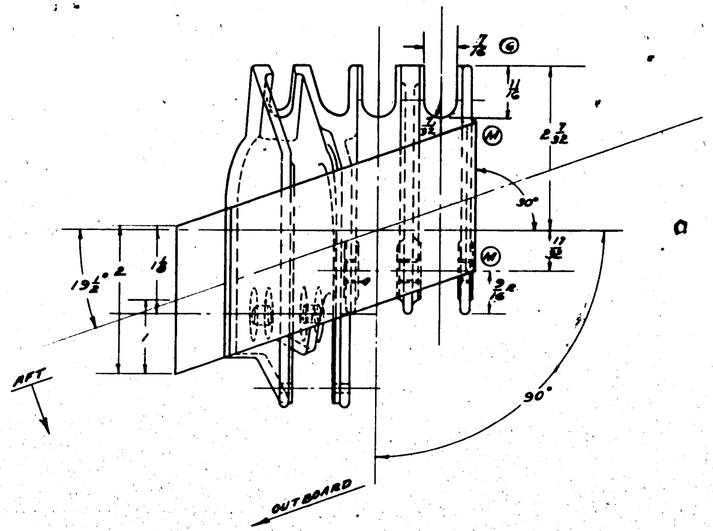

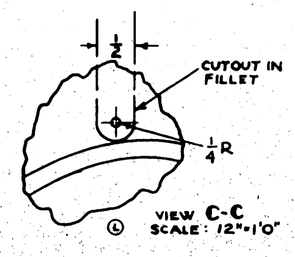

VIEW C-C
SCALE: 12"=1'0"

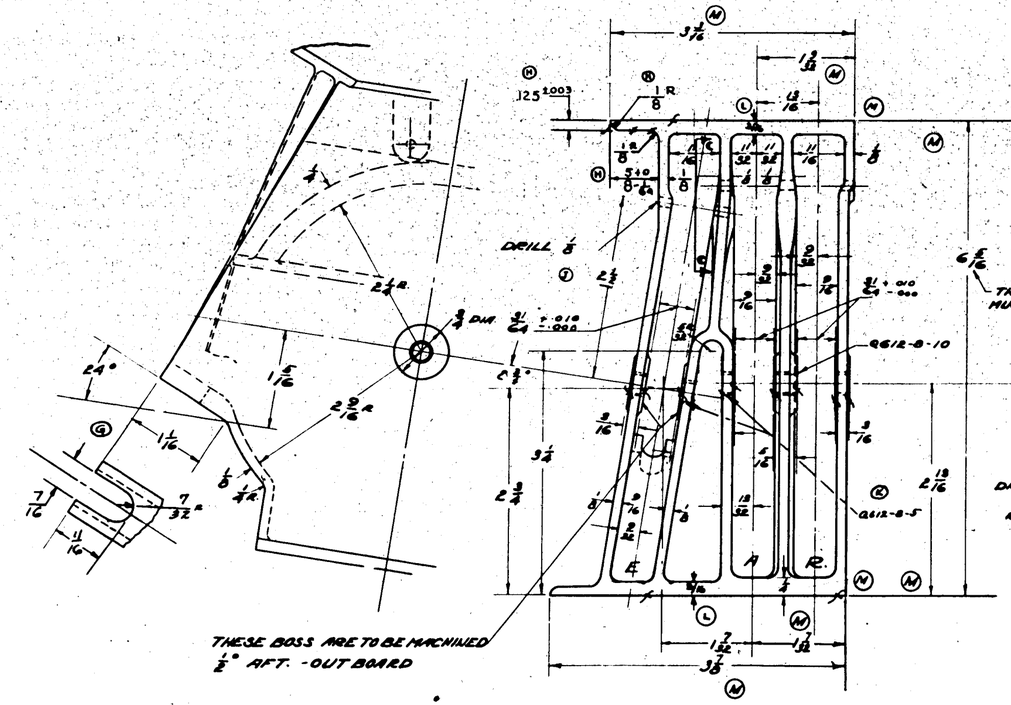

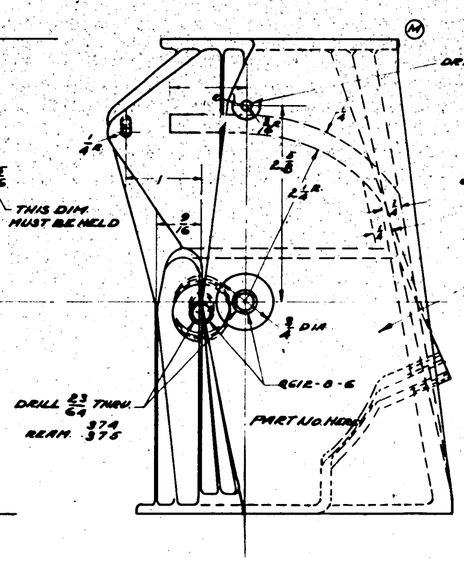

28C028-2 L.H SHOWN
28C028-3 R.H. OPPOSITE
MATL - ALUM. ALLOY CASTING
SPEC. M-186
H.T. 42000 #/SQ. IN.
FINISH Z ~~ALODINE~~ CP
(BEFORE ASSEM. BUSHINGS)

CP-(GREEN) PRIME
FINISHES CO.
[illegible]

NOTE:-
RADII NOT GIVEN TO BE 1/8

28C028 LEFT HAND ASSEM. SHOWN
28C028-1 RIGHT HAND OPPOSITE

-1	PBY-2,3	28C012	REQ.										
-1	PBY-5	28C1008											
-1	PBY-4	28C012		6G12-8-10	1	1	1	1	1	1			
-1	PBY-3	28C012		6G12-8-6 & 8	1	1	1	1	1	1			
-1	PBY-2	28C012		6G12-8-5	2	2	2	2	2	2			
-1	PBY-1	28C012											
-1	XPBY-1	28C012		28C028-3	1	1	1	1	1	1			
	XPBY-1	28C012		28C028-2	1	1	1	1	1	1			

REPLACES													
REPLACED BY													
LIMIT ON DIMENSIONS UNLESS OTHERWISE SPECIFIED	+.005 -.010												
[redacted]													
SCALE 12"=1'-0"													
AC													
NAVY NOTED													
MATERIAL													

APPROVED	DATE
[illegible]	4-8-37
CALC. WT.	ACT. WT.
O.H.	MODEL
REQUIREMENTS PER AIRPLANE	
NOTED	NONE
SPEC.	HEAT TREAT

NEXT ASSY.	REQ.	PARTS LIST PER ASSY.
MAT.		
2-[illegible]	5-[illegible]	
FINISH		

CONSOLIDATED AIRCRAFT CORP. BUFFALO, N.Y.

NAME HOUSING STAB. SURFACE CONTROL

DRAFT [illegible] CHECK [illegible] EXAM. [illegible]

OPP. HAND 28C028-1

SIZE G DWG. 28C028

SUPPLIES & EQUIPMENT CLASSIFICATION			
LET	ALTERATION	DATE	BY
G	TRACED OUT TO DATE	5-1-37	
H	[illegible]	[illegible]	
J	NOTE REMOVED; FINISH DIM.	1-24-38	
K	ADDED TO CORNER	"	"
	[illegible]	[illegible]	
L	ADDED [illegible]	[illegible]	
M	CUTOFF ADDED	7/8/38	
N	[illegible]	[illegible]	
P	[illegible]	[illegible]	
Q	ADDED 24.5° DIM. NO WT. CHG.	6-22-42	

C.O. 6888

C.O. 7338

E.O. 27981
E.O.C. 10858
E.O.^A A45973-

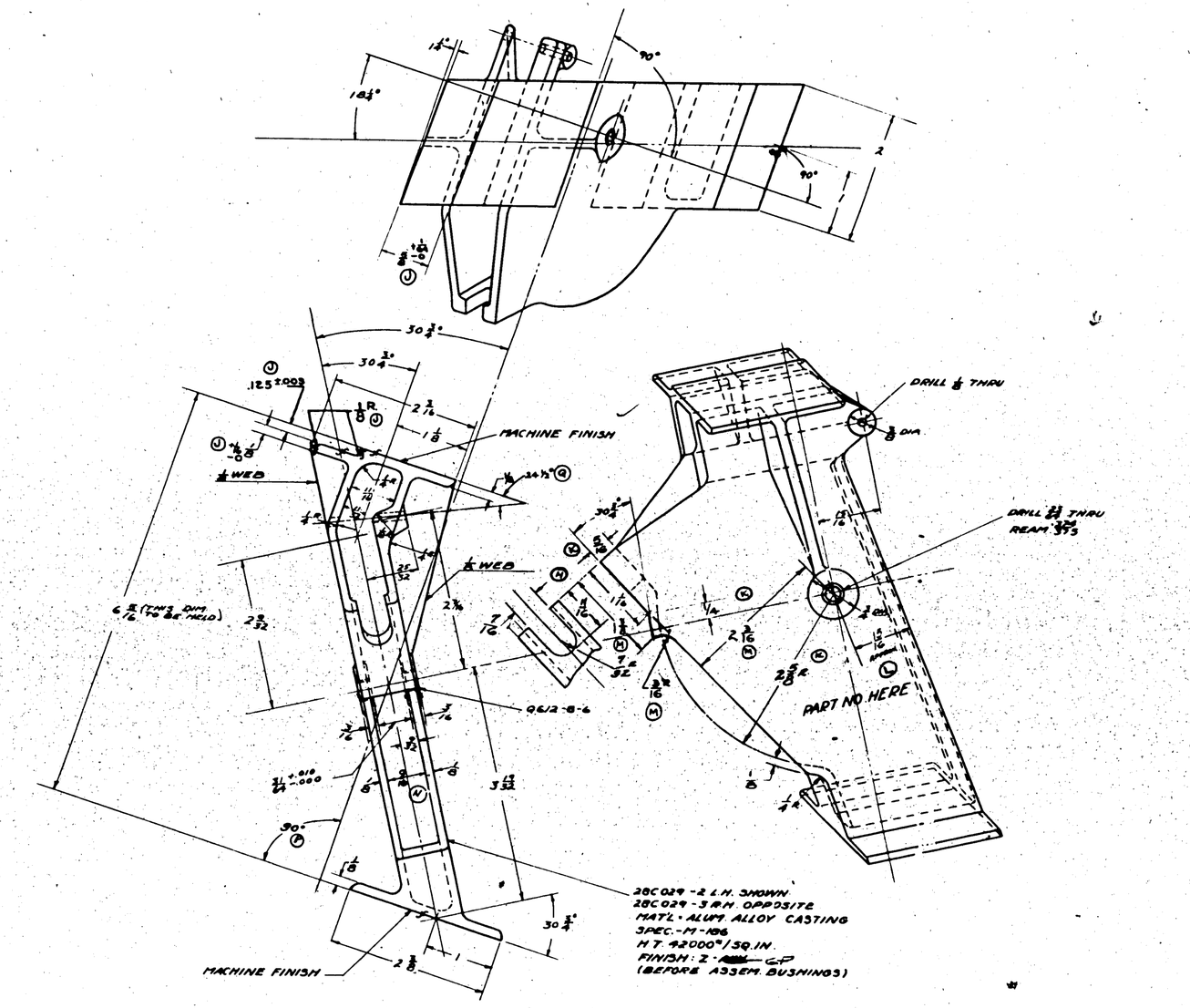

28C029 -2 L.H. SHOWN
28C029 -3 R.H. OPPOSITE
MATL - ALUM. ALLOY CASTING
SPEC. -M-186
H.T. 42000#/SQ.IN.
FINISH: Z - [illegible] - CP
(BEFORE ASSEM. BUSHINGS)

28C029 LEFT HAND AS SHOWN
28C029-1 RIGHT HAND OPPOSITE

NOTE:-
RADII NOT GIVEN TO BE ⅛

LIMITS:
± 1/32 ON CASTING DIM.
± .010 ON MACHINE "

P-GREEN PRIME
FINISH CC [redacted]

-1/2	PBY58	28C1012	1EA.	
-1/2	28-5AMH	28C1012	1EA.	
1/2	28-5MC	28C1012	1EA.	
-1/2	28-5MH		1EA.	
1/2	28-5MS		1EA.	
1/2	28-5MC		1EA.	
-1/2	28-5MA		1EA.	
-1/2	PBY-6A		1EA.	
1/2	PBY-6	28C1012	1EA.	
-	PBY-4	28C1012		
	PBY-4	28C1012		
-1	PBY-3	28C1012		
	PBY-3	28C1012		
-1	PBY-2	28C1012		
	PBY-2	28C1012		06/2-8-6
-1	PBY-1	28C1012		
	PBY-1	28C1012		
-1	PBY-1	28C1012		28C029-3
	PBY-1	28C1012		28C029-2

O.H.	MODEL	NEXT ASSY.	REQ.	PARTS	MAT.	PARTS LIST PER ASSY.
REQUIREMENTS PER AIRPLANE						

REPLACES
REPLACED BY
LIGHT ON DIMENSIONS UNLESS OTHERWISE SPECIFIED ± NOTED
APPROVED 2 APR 1-37 DATE
CALC. WT. 60 ACT. WT.
SCALE 12"=1'-0"
NAVY NOTED MATERIAL
NOTED SPEC. NONE HEAT TREAT 2 ANOD ⊕ P FINISH
CONSOLIDATED AIRCRAFT CORP. BUFFALO, N.Y.
STAMP PT. No. WHERE SHOWN

DRAWN [illegible] 3-30-37 DRAFT
TRACED [illegible] CHECK
STRESS [illegible] STRESS
ENG. [illegible] ENG.

NAME HOUSING
STA. 2-ELEVATOR PULLEY

OPP. HAND 28C029-1
DWG. NO. G 28C029
STOCK

SUPPLIES & EQUIPMENT CLASSIFICATION			
LET	ALTERATION	DATE	BY
G	TRACED TO DATE	5-4-37	[illegible]
H	3/16 WAS 1 3/16 - 5/8 WAS 7/8	1-7-37	[illegible]
J	PORTSIDE END OF -2 CUT	1-20-38	[illegible]
	OFF AND -8 ADDED	" "	"
K	PRICK PUNCH WAS 1/16 DRILL	1-20-38	[illegible]
L	CONDITION "T" WAS COND. "A"	1-20-38	[illegible]
M	FLANGE WIDTHS ON -3 INCREASED BY 3/16	7-2-38	[illegible]

E.O. 20957

FLAT PATTERN OUTLINE -2
SCALE 6"=1'-0"

NOTE:- NOT 90°

FLAT PATTERN OUTLINE -3
SCALE 6"=1'-0"

15/64 DRILL .2505/.249 LINE REAM

PRICK PUNCH ON UNDERNEATH SURFACE 3 PLACES

BRACKET SYMM. ABOUT THIS ℄ EXCEPT AS SHOWN

PRICK PUNCH 14 PLACES (K)

PRICK PUNCH AS SHOWN ON PORT SIDE.

-4 AL. ALLOY SHT .064 CONDITION "T" (L)

AC 425-D4 C'SINK HEADS TO BE ON INSIDE

.064 AL. ALLOY SH.

-2 AL. ALLOY SH. .064

-3 AL. ALLOY SH. .064

VERTICAL

PRICK PUNCH 5 PLACES (K)

(J) -8 (REF.) -7

(J) -2 CUT OFF ALONG THIS LINE

-5 AL. ALLOY SHT. .051

℄ BRACKET

AN442-D5

DRILL 1/8 THRU.

PRICK PUNCH (K)

-7 .064 AL. ALLOY SH'T.

-8 OPPOSITE.

(J) NOTE:- INSTALL ON 28C1015 ASSEMBLY.

PRICK PUNCH 9 PLACES

| | | |

LET	ALTERATION	DATE	BY
J	TRACED NO WT. CHG.	6-25-37	HARRY
K	IN D/M REPLACE, FOR -3 & -4, "Y-2-A28T X 2 1/2, MAT & SPEC." WITH "NOTED" ON PKLE ADDED MAT. NOTE "3" NO WT. CHG.	7-29-37	HARRY

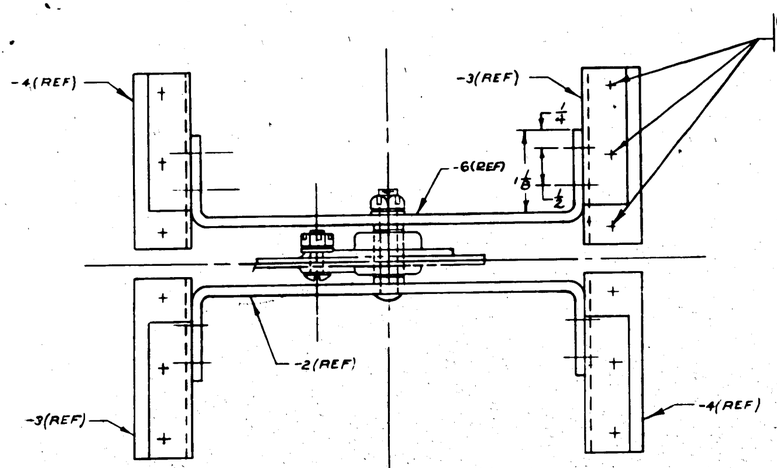

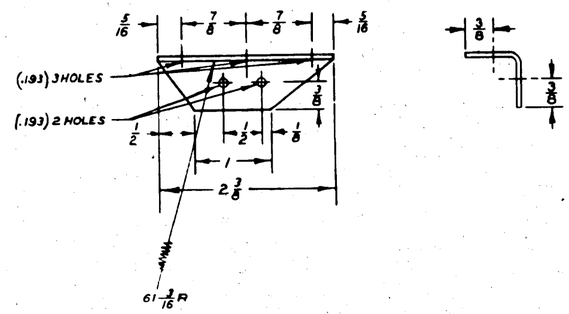

DETAIL -3
-4 OPP.

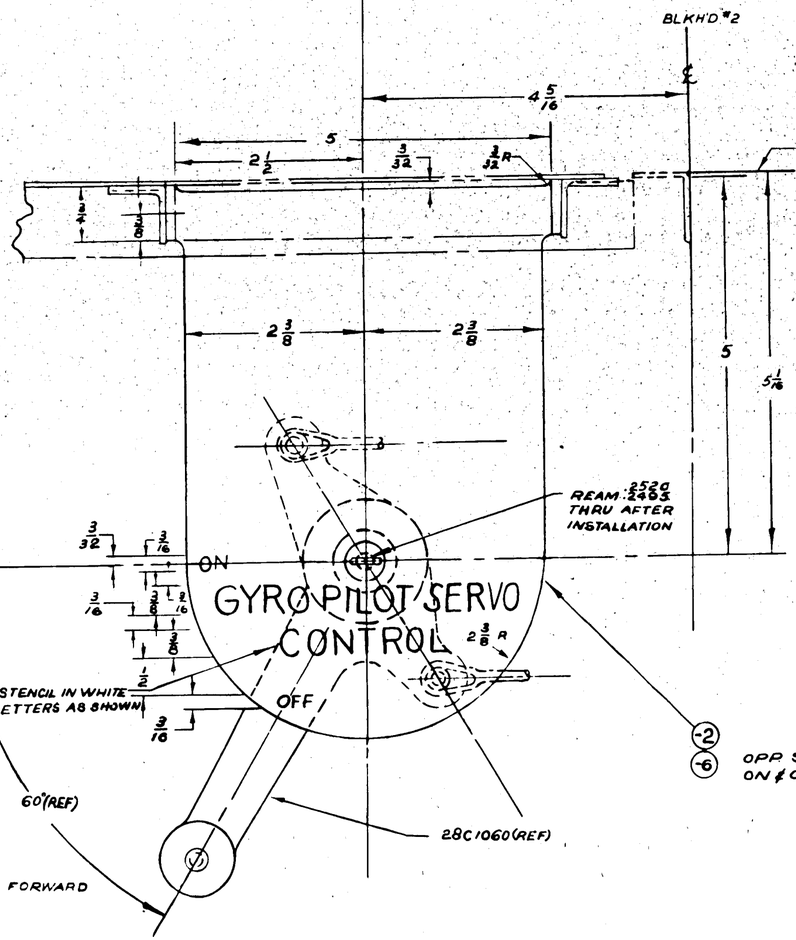

-2
-6
OPP. SAME AS -2 EXCEPT STENCIL ON ℄ OFF NOTATIONS ON OPP EDGE.

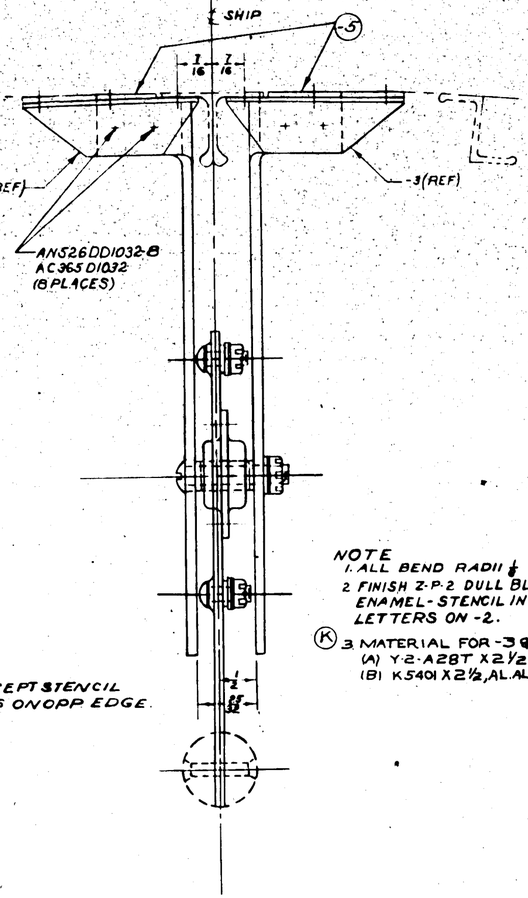

#4 ℄ ON
#18 ℄ ON

NOTE
1. ALL BEND RADII ℄
2 FINISH Z-P-2 DULL BLACK ENAMEL - STENCIL IN WHITE LETTERS ON -2.
(K) 3 MATERIAL FOR -3 & -4 MAY BE: C91876 C.884-76
(A) Y-2-A28T X 2 1/2, OR
(B) K5401 X 2 1/2, AL. AL. EXT., SPEC: QQ-A-354T

ASSY DASH NO.	MODEL	NEXT ASSY	NO.
-0	28-8MA	28C5300	1
-0	28-5ME	28C5300	1
-0	28-8MC	28C5300	1
-0	28-8MN	28C5300	1
-0	PBY-5B	28C5306	1
-0	28-8AMC	28C5730	1
-0	28-8AMN	28C5730	1
-0	U3C-B	28C5001	1
-0	PBY-5	28C5006	1
-0	PBY-5A	28C5306	1
	PBY-1	28C1006	1
	XPBY-1	28C001	1

REQUIREMENTS PER AIRPLANE

28C1006	5-1-37	.98	GALS. WT.
REPLACED BY			ACT. WT.

LIST OR DIMENSIONAL DRAWING	SCALE
1	12"=1'-0"

STAMP PART NUMBER WHERE SHOWN

Q2305-04
AC365D1032
AN442-05
AN526D1032-8

PART NO	STOCK	MATERIAL	SPEC	LH REQ	RH REQ	LH REQ	RH REQ	LH REQ	RH REQ
-3	1/16 x 1 1/16 x 1 5/16	AL AL SHEET	QQ-A-355 ¾	4		4		4	
-4	NOTED	NOTED	NOTED	2		2		2	
-5	NOTED	NOTED	NOTED	2		2		2	
-2	1/25 x 2 5/8 x 7 15/16	AL AL SHEET	QQ-A-355 ¾	1		1		1	
-6	1/25 x 2 5/8 x 7 15/16	AL AL SHEET	QQ-A-355 ¾	1		1		1	

PARTS LIST PER ASSY — -0 28C1006 -1 XPBY-1 -4 -5

A.C.			5-22-37	TW		1 OF 1
NAVY	NOTED		6-25-37			
HEAT TREAT	FINISH		7-29-37			
			SCALE	DRAFT	CHECK	STRUCT	MAT	APPROV	ENG

NAME QUADRANT INSTALL GYRO PILOT SERVO CONTROL

OPP HAND: NONE

DWG NO. 28C1006 SIZE G

CONSOLIDATED AIRCRAFT CORP. SAN DIEGO CALIF.

R

28C1006

SUPPLIES & EQUIPMENT CLASSIFICATION			
LET	ALTERATION	DATE	BY
C	TRACED UP TO SHEET	8-3-37	[redacted]
D	AC535-1032, AN365-1032, AN960-10 TO REPLACE AN442-06. CREATED SUBASS'Y. BASED ON DASH NO.-148-M4-10-41		PREPD
E	CHANGED AC535-1032-8 (4) TO AC535-1032-6 (4) & AN3-4A (2) TO AN3-6A (2) ON DWG & B/M	4-6-41	[illegible]
F	ADDED -22-7 TO 5/16	7-5-41	[illegible]
G	ADD'D STD ASSY 188119 AND 148115	8-7-41	[illegible]
H	T.125) FILLER 1/2 X 3 5/8 AL-ALLOY SHEET, SPEC. 47A10 WAS "(.125) FILLER 5/8 X 3 5/8 AL-ALLOY SHEET, SPEC. 47A10 COMB. T 24 ST. FOR .19 WT. CHG. [illegible]	1-43	[illegible]

EQ. SHEET B
PBY-5&5A
SEE SHT. DA-10
AVO. SHEET F

EAC WALKER 68-69

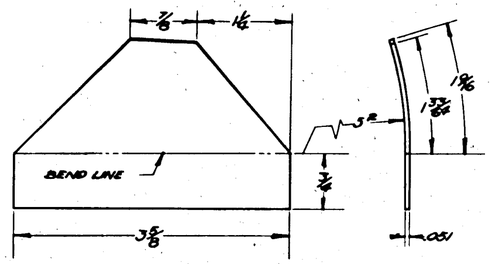

(4) L.H. SHOWN
(5) R.H. OPPOSITE
SCALE - 12"=1'-0"

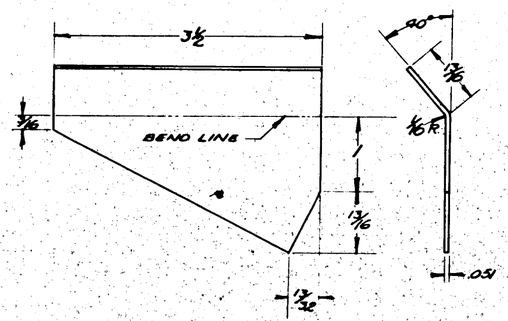

(2) L.H. SHOWN
(3) R.H. OPPOSITE
SCALE - 12"=1'-0"

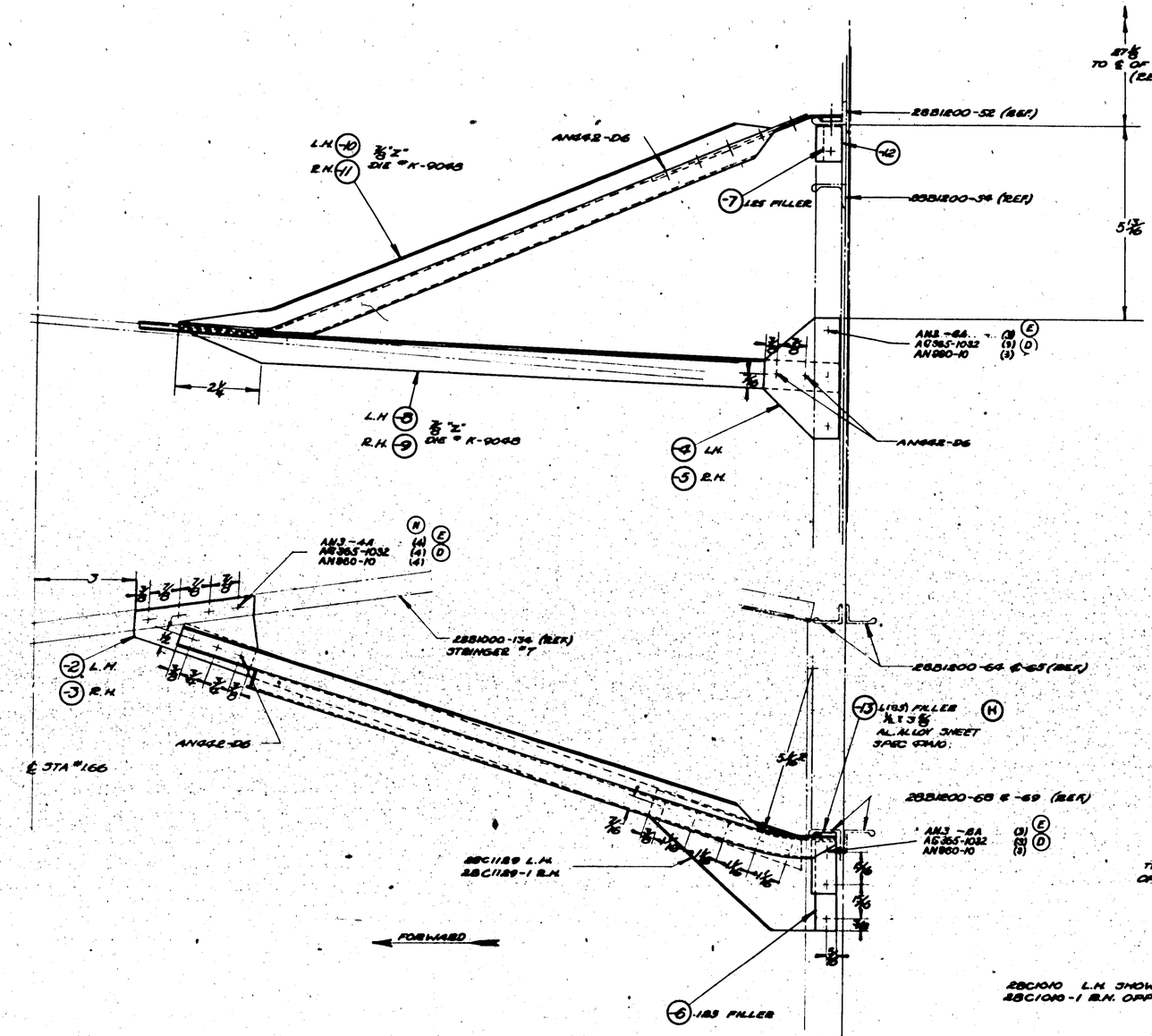

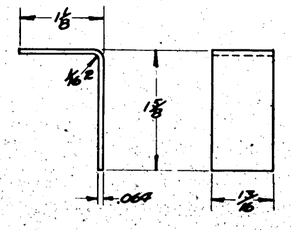

(12) CLIP
SCALE - 12"=1'-0"

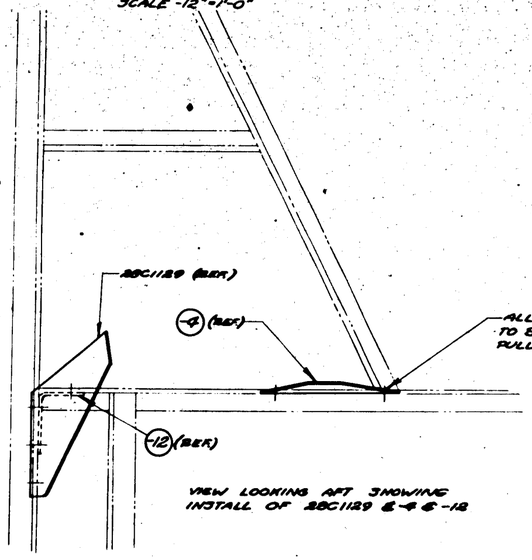

VIEW LOOKING AFT SHOWING INSTALL OF 28C1129 & -4 & -12

2BC1010 L.H. SHOWN
2BC1010-1 R.H. OPP

				28C1010-6		
				-7		
1/4	PBY-5&5A	28C1012	11	AN3-4A	4	
1/4	28-STAMP	28C1012	11	AN3-6A	6	
1/4	28-STAMP	28C1012	11	AC365-1032	10	
1/4	28-STAMP	28C1012	11	AN442-06		
1/4	PBY-5A	28C1012	11	AN960-10	10	
-1	28-STMN	28C1012		28C1129-1	1	
	28-STMN	28C1012		-11	1	
-1	28-STME	28C1012		-3	1	
	28-STME	28C1012		-9	1	
-1	28-STMC	28C1012		-5	1	
	28-STMC	28C1012		-19	1	
-1	28-STMA	28C1012				
	28-STMA	28C1012		28C1129	1	
-1	PBY-5	28C1012		-10	1	
	PBY-5	28C1012		-8	1	
-1	PBY-4	28C1012		-7	1	
	PBY-4	28C1012		-4	1	
-1	PBY-3	28C1012		-6	1	
	PBY-3	28C1012				
-1	PBY-2	28C1012		SUBASS'Y-19	1	
	PBY-2	28C1012		SUBASS'Y-18	1	
-1	PBY-1	28C1012		-17	1	
	PBY-1	28C1012		28C1010-2	1	

A 1 8-3-37 APPROVED DATE
CALC. WT. ACT. WT.
SCALE 6"=1'-0" NOTED
AC
NAVY NOTED
MATERIAL

O.H.	MODEL	NEXT ASSY.	REQ.
NOTED		NOTED	

REQUIREMENTS PER AIRPLANE

MAT.	PARTS LIST PER ASSY.
2-P-2 MARK P	

A	B	C	D
NEXT ASSY	REQ.	NEXT ASSY	REQ.

STRESS [illegible] HELLER
DRAFT CHECK ENGR. DNS
9-25-37

REPLACES
REPLACED BY
LIMIT ON DIMENSIONS UNLESS OTHERWISE SPECIFIED ± [redacted]

ALL AL. ALLOY SHEET SPEC. 47A10 (CONDITION T) ALLOY 24S EXCEPT AS NOTED
ALL AL. ALLOY EXTRUSIONS SPEC. 46A8 CONDITION T) ALLOY 24S EXCEPT AS NOTED
HEAT TREAT ALL CONDITION A MATERIAL PER SPEC. 3563 COMBAT
RIVETS AL. ALLOY EXCEPT AS NOTED

CONSOLIDATED AIRCRAFT CORP. BUFFALO, N. Y.
STAMP PT. NO. WHERE SHOWN

NAME REINFORCEMENT ASS'Y. SURFACE CONT-BULK #2

DWG. G 28C1010

OPP. HAND 28C1010-1

[redacted] FINISH COLOR

SUPPLIES & EQUIPMENT CLASSIFICATION			
LET	ALTERATION	DATE	BY
E	TRACED	4-28-41	E.P.
F	MADE MISC: DRILL #18 (.166) 3 HOLES AN4820-DB-14 ; AN 365 DD ; AN 960-6 ; AN 935-6 ; 3 PLACES		
G	2-2-4 WERE SHOWN ATTACHED WITH AN 442 DS. PBY-5 & PUT. ASS'Y. CREATED	4-29-41	PAUL
H	ON DWG. & B/M CHANGED AN 3-6 TO AN 3-5	5-12-41	PAUL
J	DRILL #18 (2 HOLES) WAS DRILL #18 (3 HOLES). AN515-DB-12 WAS AN515-DB-14 ALL ON NOTE FOR 28C1081. ON NOTE FOR 28C1141 DRILL #18 (2 HOLES) WAS DRILL #18 (3 HOLES). IN B/M AN515-DB-12 (4 WAS 3), AN365-DD32 (4 WAS 2) REMOVED AN515-DB-14 FROM B/M & C B/M	5-14-41	GEORGE

E.O. 19476

E.O. 39986 PBY-5 28-5

E.O. 39986 A NOTED

E.O. E-5271 PBY-5 28-5 SMS, MA MC, MM

(F) DRILL #18 (.180) 2 HOLES

(J) AN515-DB-12 AC365-DD32 2 PLACES

DRILL #6 2 HOLES IN BULK'D WEB LOCATE FROM MILE TAB CABLE

28C3001 INSTALL WITH CABLES IN PLACE, COUNTER BORE TO BE FACING FORW'D

DECK LINE

PILOT DRILL #6 4 HOLES

DRILL #6 DIA 2 HOLES THRU BULK'D

28C1141

DRILL #18 (.180) 2 HOLES AN515-DB-12 AC365-DD32 (J)

INSTALL WITH CABLES IN PLACE (1 PER SHIP ON PORT SIDE ONLY

VIEW 'A' LOOKING F'WD SCALE 3"=1'0"

DRILL #24 THRU LINE REAM .257/.259

-2

MAT'L .064 AL ALLOY SN SPEC 47010 COND 'A' ALLOY 24S HT SP 53 COND 'T' ALL BEND RADII 1/16

DRILL #24

PILOT DRILL #6 2 HOLES

-3

DRILL #24

PILOT DRILL #6 2 HOLES

-4

BULKHEAD #4

AN 210-30 3 PLACES

20 7/32 TO DECK LINE

22 5/32 TO DECK LINE

23 27/32 TO DECK LINE

44 1/8 TO ℄ SHIP

63 1/2 TO ℄ SHIP

46 29/32 TO ℄ SHIP

USED ON PBY-5 28-5 SMS

- AN 3-5
- AN 310-3
- AN 960 A10
- Q 710 2 A10
- AN 380-2-2

12 PLACES

AN 24-15
AN 320-4
AN 960-416
AN 320-2-2
3 PLACES

28C1416 (REF)

INSTALL ON PORT SIDE ONLY VIEW LOOKING AFT

FINISH CODE	
Z	ANODIC TREATMENT
P	P-27 PRIMER
AP	ALUMINIZED PRIMER
C	CADMIUM PLATE

SP-GREEN PRIME

Q 710 2 A10		24	
AN 960 A10		18	
AN 310-3		18	
AN 3-5		36	
AN 365 DD 32	4	4	4
AN 515 DB 12	6	6	6
AN 442 DS	12	12	
AN 380-2-2	3	3	15
AN 960-416	3	3	3
AN 320-4	3	3	3
AN 24-15	3	3	3
AN 210-30	3	3	3
AN 365 DD 32	4	4	4
AN 515 DB 12	6	6	6
AN 442 DS	12	12	
AN 380-2-2	3	3	15
AN 960-416	3	3	3
AN 320-4	3	3	3
AN 24-15	3	3	3
AN 210-30	3	3	3

(F)

	PBY-5B	28C3201	1	28C2081		1	1
	28-5 SMS	28C2000	1	28C1141		1	1
	MC, ME, MN	28C2001	1		-4	1	1
	PBY-5	28C2002	1		-3	1	1
	PBY-4	28C2003	1	28C1414-2		2	2
	PBY-5	28C1004	1				
	PBY-5	28C2004	1				
	PBY-5	28C2005	1				

REPLACES		APPROVED	DATE				
REPLACED BY 28C1014 SHEET 1 & 2		JV	5-1-41				
LIMIT ON DIMENSIONS UNLESS OTHERWISE SPECIFIED		CALC. WT.	ACT. WT.	O.H.	MODEL	NEXT ASSY.	REQ.
		SCALE 12"=1'0"		REQUIREMENTS PER AIRPLANE			
		AC					
		NAVY NOTED		NOTED		NOTED	
		MATERIAL		SPEC.		HEAT TREAT	

ST'D PARTS	MAT.	PARTS LIST PER ASSY.	
		MADE	
		2-2-4	
		FINISH GP	
		DRAFT	CHECK

CONSOLIDATED AIRCRAFT CORP. BUFFALO, N.Y.

STAMP PT. No. SHALL BE SHOWN

NAME INSTALL SURFACE CONTROL PULLEYS BULK'D #4

OPP. HAND

SIZE G

DWG. NO. 28C1014

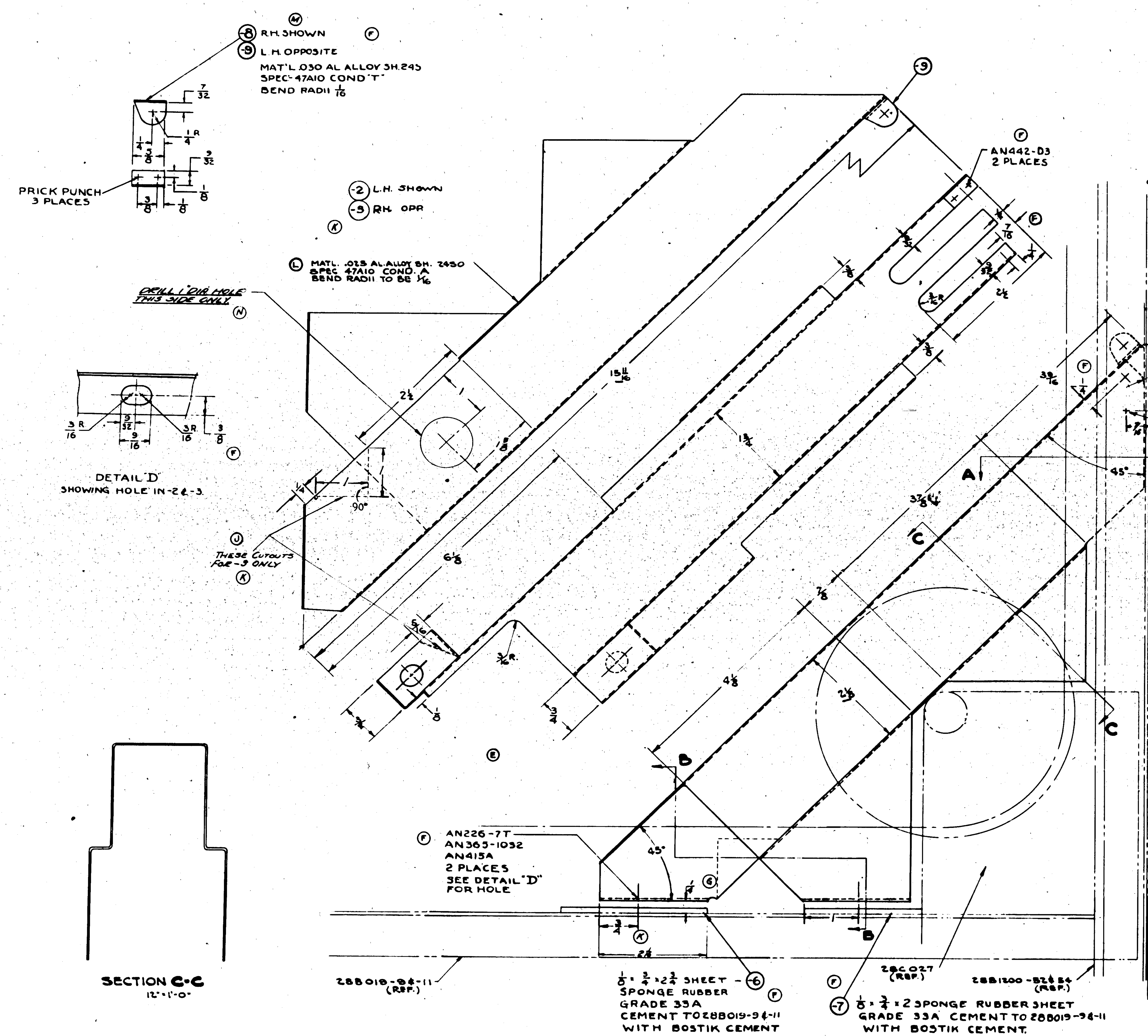

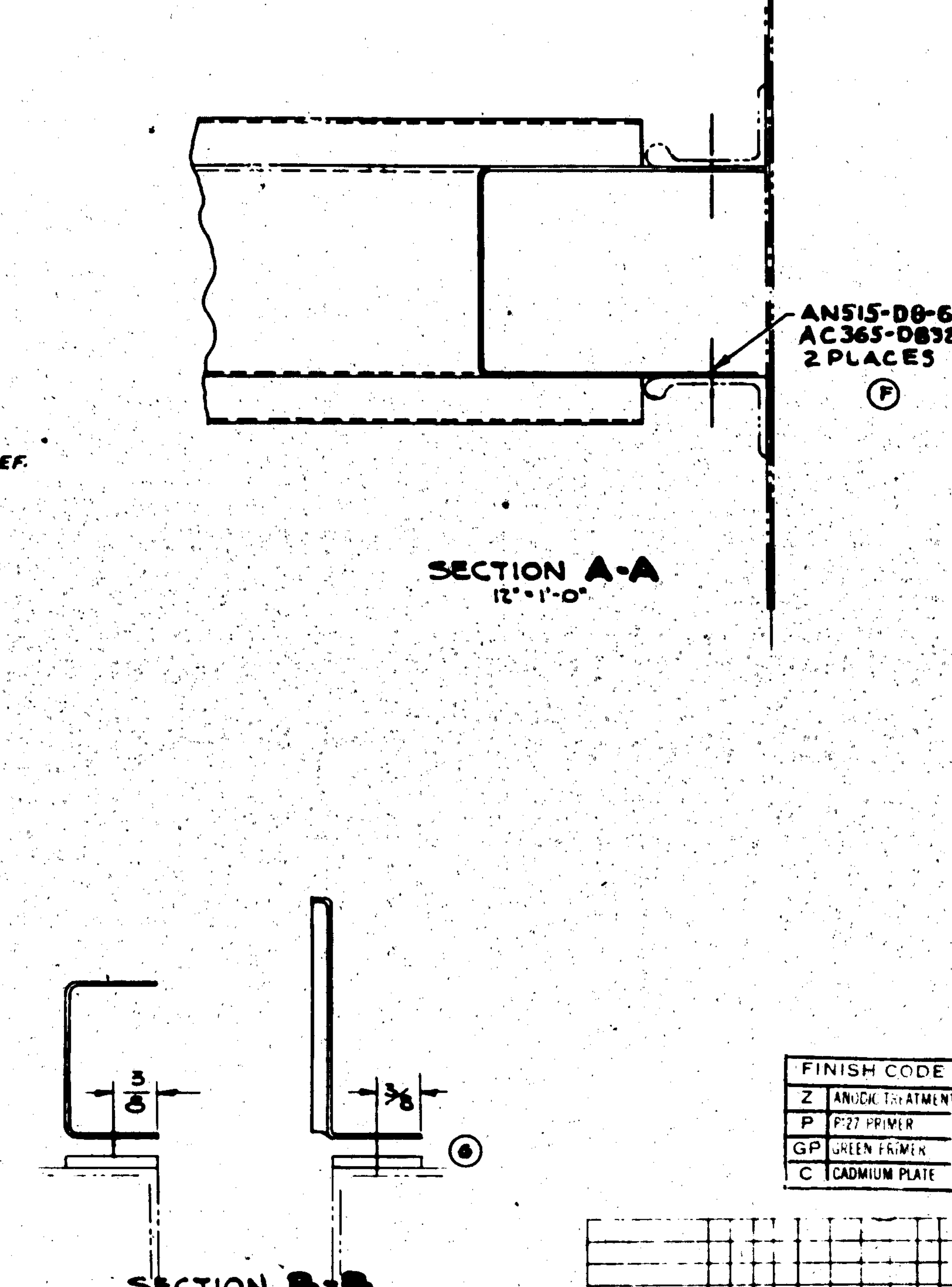

E.O.80079 PBY-1 K
E.O.A25252

SUPPLIES & EQUIPMENT CLASSIFICATION			
LET	ALTERATION	DATE	BY
M	DWG & BLM CHANGE -8RH SHOWN & -9LH OPPOSITE WAS -8LH SHOWN & -9RH OPPOSITE.	8-25-41	[illegible]
N	ADDED 11" LOCATING DIM. ADDED 1" DIA HOLE & LOCATING DIM. WT. CHG. NEG.	4/3/42	CARLSON

#5992
E.O. 30964

SUPPLIES & EQUIPMENT CLASSIFICATION			
LET	ALTERATION	DATE	BY
D	TRACED	7-7-37	
E	Revised Lower End Of -2 & -3	8-26-37	
F	ADDED DETAIL "D", -6, -7, -8, -9, AN226-7T, AC365-1032, AN415A, AND AN442-D3. REMOVED AN515-D8-6 4 REQ, AC365-D832 2 REQ AND AN428-D3 4 REQ. ADD 1 5/16 & 7/16 DIMS. ADDED HINGE AT TOP	11-4-37	
F	CHANGED FASTENING AT BOTTOM	11-4-37	
G	RAISED GUARD & ABOVE 28B019-94-11	1-7-38	
H	ADD PBY-4 REQD. OMITTING -6 & -7 -40 RH, -41 LH ASS'Y PBY-4	"	
J	ADDED -10, -51 ASSY. & XPBY-5 REQUIREMENT	10-18-39	
K	-10 & -51 ASSY REPLACED WITH -3 & -41 ASSY. 3/4 WAS 1 1/2, 2 1/16 WAS 2 1/16 CHANGED -2 & -3 TO SUIT	12-27-40	
L	2450, COND. A, WAS 24ST, COND. T, SF63 ADDED FOR H.T. SPEC.	7-1-41	

FINISH CODE	
Z	ANODIC TREATMENT
P	P27 PRIMER
GP	GREEN PRIMER
C	CADMIUM PLATE

O.H.	MODEL	NEXT ASSY.	O.H.	MODEL	NEXT ASSY.
-41	28-5MMN	28C1012	-41	28-5MC	28C1012
-40	28-5MMN	28C1012	-40	28-5MC	28C1012
-41	PBY-5B	28C1012	-41	28-5MA	28C1012
-40	PBY-5B	28C1012	-40	28-5MA	28C1012
-41	28-5AMC	28C1012	-41	PBY-5	28C1012
-40	28-5AMC	28C1012	-40	PBY-5	28C1012
-41	28-MN	28C1012	-40	XPBY-5	28C1012
-40	28-MN	28C1012	-41	PBY-4	28C1012
-41	PBY-5A	28C1012	-40	PBY-4	28C1012
-40	PBY-5A	28C1012	-1	PBY-3	28C1012
-41	28-5ME	28C1012		PBY-3	28C1012
-40	28-5ME	28C1012	-1	PBY-2	28C1012
				PBY-2	28C1012
			-1	PBY-1	28C1012
				PBY-1	28C1012

REQUIREMENTS PER AIRPLANE

PARTS							
AN415A	2	2	2	2	2	2	2
AN226-7T	2	2	2	2	2	2	2
AN515-D8-6	2	2	2	2	2	2	2
AN442-D3	2	2	2	2	2	2	2
AC365-1032	2	2	2	2	2	2	2
AC365-D832	2	2	2	2	2	2	2
-9	1	1	1	1			
-8	1	1	1	1			
-7	1	1	1	1	1		
-6	1	1	1	1	1		
28C1016-3	1	1	1	1			
28C1016-2	1	1	1	1			

LH RH LH RH LH RH LH RH — PBY-1, PBY-2, PBY-3, -40, -41 — PARTS LIST PER ASSY.

REPLACES	
REPLACED BY	
LIMIT ON DIMENSIONS UNLESS OTHERWISE SPECIFIED	± 1/32

APPROVED 7-7-37 DATE
CALC. WT. AG — ACT. WT.
SCALE 12" = 1'-0"
AC
NAVY NOTED — MATERIAL
NOTED — SPEC.
5R53 — HEAT TREAT
Z-P-2GP — FINISH
2-5-37 — C.C.P. 4-27-37 CN
DRAFT — CHECK — EXAM. — ENG.

CONSOLIDATED AIRCRAFT CORP. BUFFALO, N. Y.
STAMP PT. No. WHERE SHOWN

NAME: GUARD-AILERON & RUDDER PULLEY'S - LOWER BULKHEAD #2
OPP HAND 28C1016-1
SIZE G — DWG. 28C1016

R
28C1016

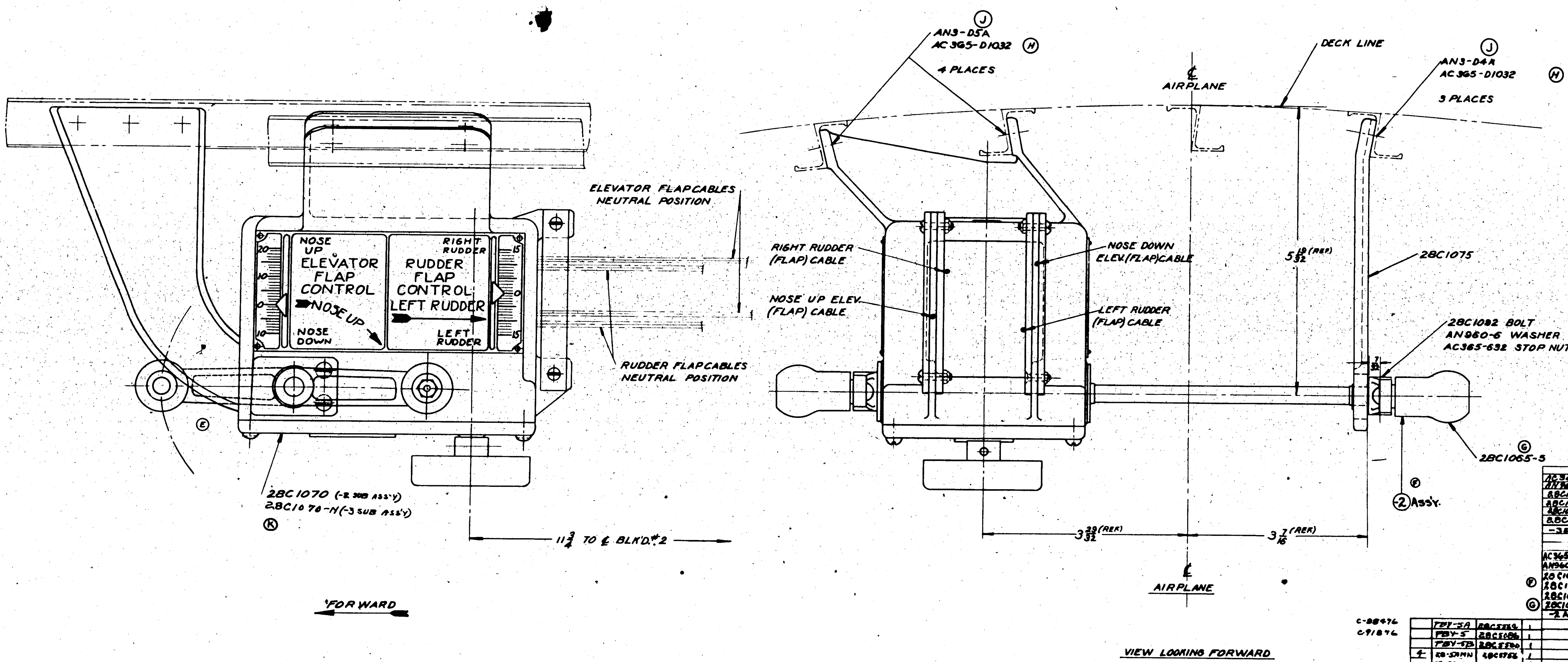

SUPPLIES & EQUIPMENT CLASSIFICATION

	LET	ALTERATION	DATE	BY
	D	TRACED	5-1-37	
	E	R.H. UNIT OF 28C1068 ROTATED 180° FROM L.H. UNIT		
	F	ADDED -2 ASS'Y., CONSISTING OF 28C1065, 28C1070, 28C1075, 28C1092, AN960-6 & AC365-632		
E.O. 15271A	G	28C1065-5 WAS 28C1065		
EO 28659	H	AC 365-D1032 WAS AN-320-D3, AN 380-2-2 REMOVED	12-5-40	
E.O. 33300A	J	WAS AN3-D4, AN3-D5	1-3-41	
E.O. 42493A	K	ADDED -2 ASS'Y & -3 SUB ASS'Y		

	AC365-632	1
	AN960-6	1
	28C1092	1
	28C1075	1
	28C1070-N	1
	28C1065-5	1
	-3 SUB ASS'Y	
	AC365-632	1
	AN960-6	1
	28C1092	1
F	28C1075	1
	28C1070	1
G	28C1065-5	1
	-2 ASS'Y.	

	O.H.	MODEL	NEXT ASSY.	REQ.	PART NO.			
C-88476		PBY-5A	28C5569	1				
C-91876		PBY-5	28C5086	1				
		PBY-5B	28C5500	1				
	4	28-5AMN	28C5756	1				
		28-5AMC	28C5750	1				
C-704964 77713		28-5A	28C5500	1EA	AN3-D4A	3	3	3
		PBY-5A	28C5700	1				
C-70476		PBY-5	28C5000	1	AC365-D1032	7	7	7
		PBY-4	28C2000		AN3-D5A	4	4	4
		PBY-3	28C3000					
		PBY-2	28C2000					
		PBY-1	28C1000		-3		1	
		XP3Y-1			28C1018-2	1	1	1

REQUIREMENTS PER AIRPLANE — MAT. — PARTS LIST PER ASSY.

REPLACES	
REPLACED BY	
LIMIT ON DIMENSIONS UNLESS OTHERWISE SPECIFIED ±	
[redacted]	
APPROVED	5-1-37 DATE
CALC. WT.	ACT. WT.
SCALE	12" = 1'-0"
AC	
NAVY: NOTED MATERIAL	NOTED SPEC.
NONE HEAT TREAT	NONE FINISH
DRAFT	WIER 5-25-37
CHECK	
EXAM.	
ENG.	
CONSOLIDATED AIRCRAFT CORP. BUFFALO, N.Y.	NAME: INSTALLATION - FLAP CONTROL - GEAR BOX
STAMP PT. No. WHERE SHOWN	OPP. HAND
DWG.	G 28C1018

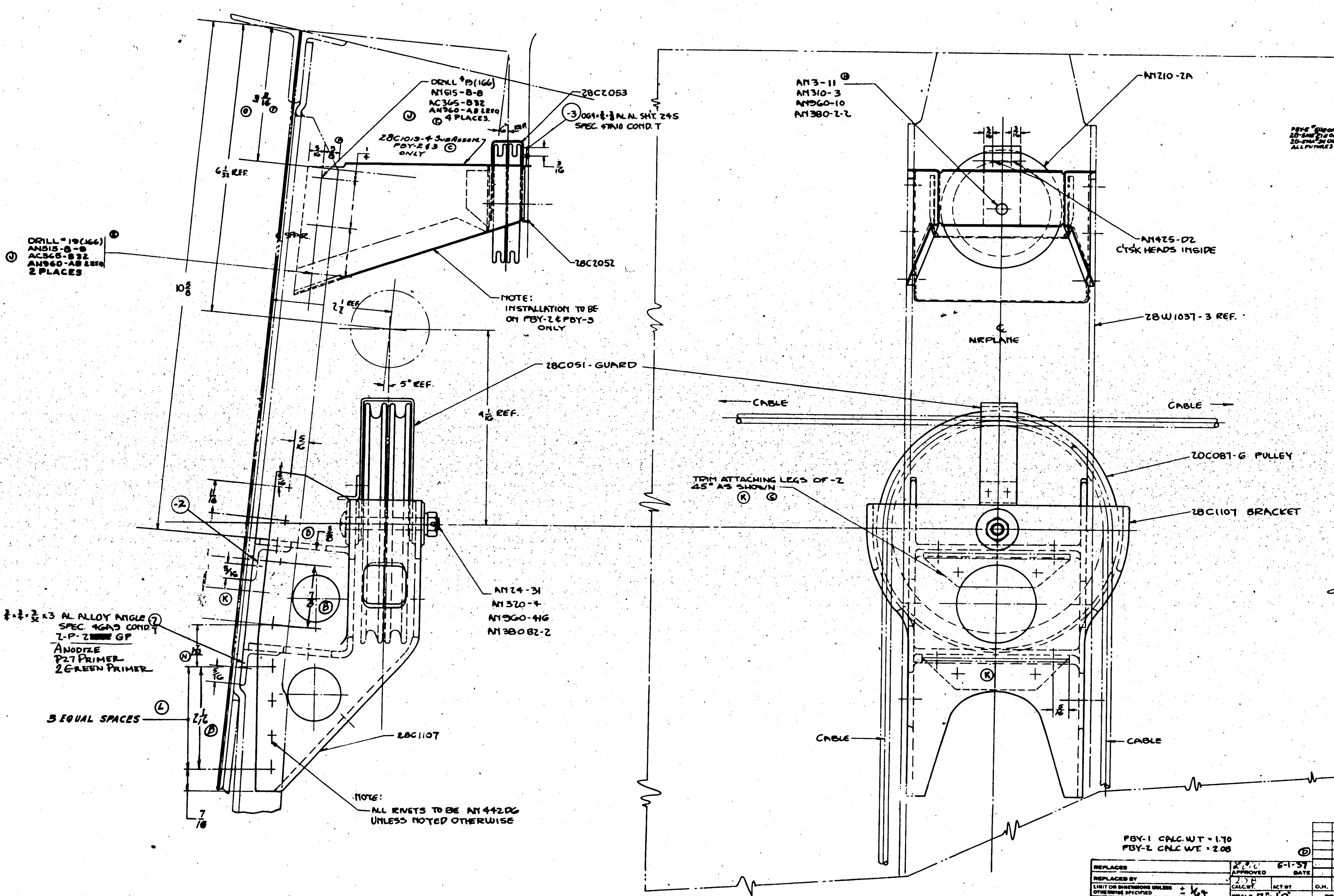

SUPPLIES & EQUIPMENT CLASSIFICATION

	LET	ALTERATION	DATE	BY
	B	TRACED	5-1-37	[illegible]
	C	ADDED -4 SUB ASSEM	9-17-37	[illegible]
	D	ADDED MODEL No. IN TITLE BLOCK	9-17-37	[illegible]
	E	[illegible]	1-7-38	[illegible]
C.O.6752	F	[illegible]	"	"
	G	ATTACH LEGS OF -2 TRIMMED 45°	"	"
	H	AN3-11 WAS AN3-10	"	"
C.O.7536	J	AN515-8-8 WAS AN515-D8-7	3-5-38	[illegible]
	"	AN515-8-9 WAS AN515-D8-8	"	"
	"	AC365-832 WAS AC365-D832	"	"
	"	AN960-A8 ADDED	"	"
E.O.23466	K	REVERSED ANGLE -2 & REMOVED	10-31-40	[illegible]
		ONE AN442-D6 FROM DWG. & B.M.		
E.O.30322	L	REARRANGED RIVET SPACING	12-9-40	[illegible]
	"	(WAS 8 EQUAL SPACES)	"	"
E.O.30326	M	REARRANGED RIVETS	[illegible]	[illegible]
E.O.30326	N	1 1/32 DIM. WAS 7/8	1-27-41	[illegible]
E.O.38953	O	3 3/16 DIM. WAS 2 15/16 FOR -4	4-9-41	[illegible]
		SUB ASS'Y. THIS DIM. WAS		
		INCREASED AT THE F CHANGE		

PBY-5 "[illegible]" ON 28-5A [illegible] ON 28-5 [illegible] ON ALL FUTURES

	PART				
	AN210-2A		2	2	2
H	AN3-11		1	1	1
	AN310-3		1	1	1
	AN960-10		1	1	1
	AN380-2-2		1	1	1
	AN425-D2		2	2	2
	28C2053		1	1	1
	28C2052		1	1	1
	28C1019-3		1	1	1
C	28C1019-4 COMPOSED OF ABOVE PARTS				
	AC365-832		6	6	6
J	AN515-8-8		4	4	4
	AN515-6-8		2	2	2
	AN960-A8		12	12	12
K	AN442-D6	30	30	30	29
	AN960-416	1	1	1	1
	AN380-B2-2	1	1	1	1
	AN320-4	1	1	1	1
	AN24-31	1	1	1	1
	20C087-6	2	2	2	2
	28C1107	1	1	1	1
	28C051	1	1	1	1
	28C1019-4		1	1	1
	28C1019-2	2	2	2	2
	PARTS				

PARTS LIST PER ASSY.

O.H.	MODEL	NEXT ASSY.	REQ.
	PBY-5A/B	28W2014	1 EA
	PBY-5	28W2014	
	PBY-4	28W2014	
	PBY-3	28W2014	1
	PBY-2	28W2014	1
	PBY-1	28W014	1

REQUIREMENTS PER AIRPLANE

PBY-1 CALC. WT. = 1.70
PBY-2 CALC. WT. = 2.08

REPLACES	
REPLACED BY	
LIMIT ON DIMENSIONS UNLESS OTHERWISE SPECIFIED	± 1/64
[redacted]	

APPROVED [illegible]	DATE 6-1-37		
CALC. WT. [illegible]	ACT. WT.		
SCALE 12" = 1'0"		MAT.	
AC			DRAFT 4-10-36 [illegible]
NAVY		NOTED	CHECK GP 5-5-37
MATERIAL	SPEC. / HEAT TREAT	FINISH	EXAM. / ENG.

CONSOLIDATED AIRCRAFT CORP. BUFFALO, N.Y.

STAMP PT. No. WHERE SHOWN

NAME: BRACKET INSTALL. CENTER SECT. REAR SPAR AILERON PULLEY

OPP. HAND

DWG SIZE G 28C1019

DIETZGEN-MCFADDEN CO., INC. BUFFALO — IMPERIAL TRACING CLOTH

SUPPLIES & EQUIPMENT CLASSIFICATION			
LET	ALTERATION	DATE	BY
C	TRACED	5-3-37	HW
D	ADDED REQMTS. FOR PB2Y-2, REVISED REQMTS. ON XB-24, B-24, B-24A, B-24C & D & LB-30	7-3-41	GMAY
E	ON FACE OF DRG. 23/32 DIM. WAS 11/16, AN-QQ-A-332 WAS M-186 & AC-143-2 WAS A-219-33A	2-17-42	NOBLE
F	ON FACE OF DWG AT (-2) ADDED ALTERNATE MAT'L NOTE (B), IN B/M, BR'T AIR/REQTS. TO DATE (NO WT. CHG.)	7-6-43	NOBLE

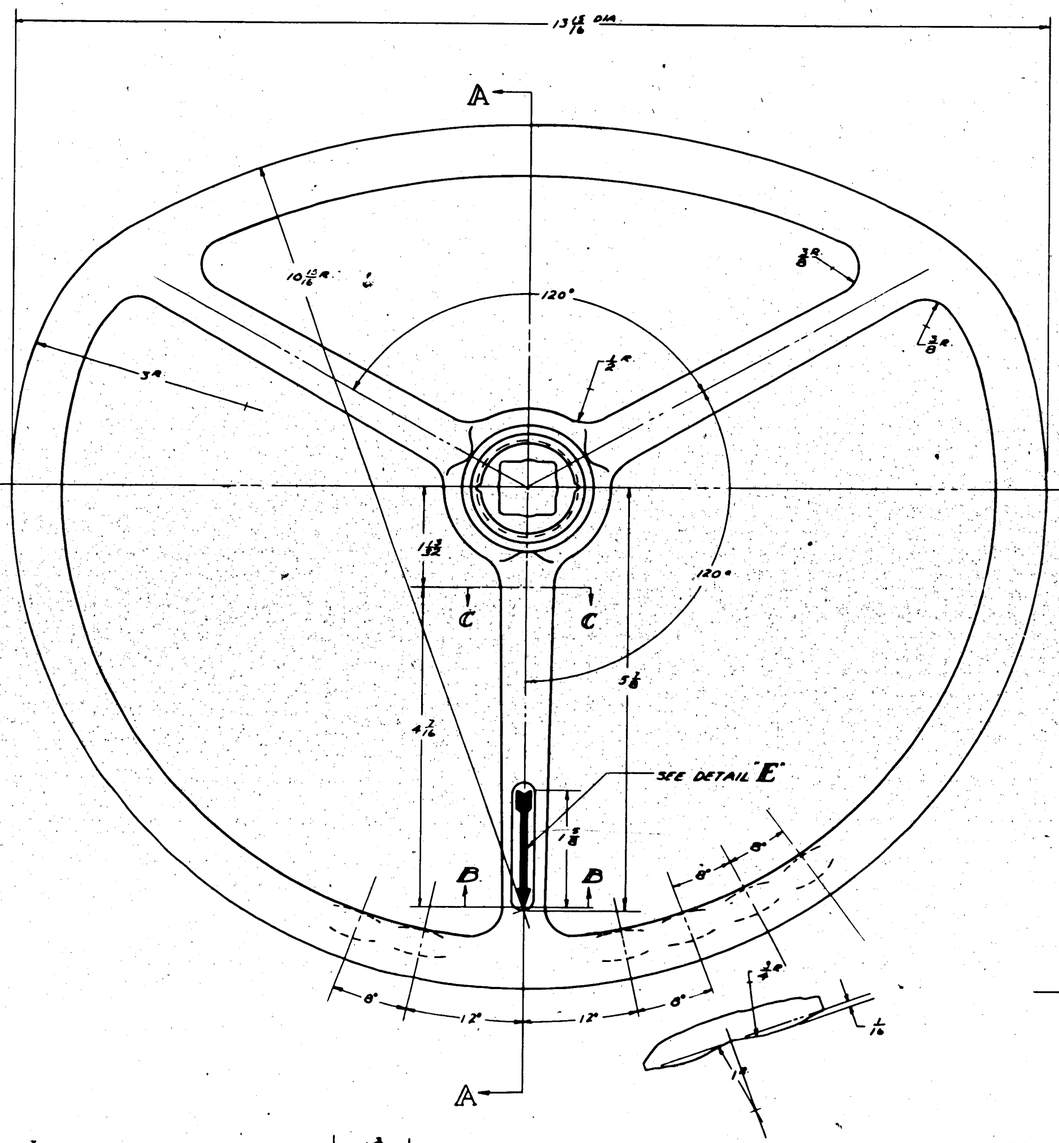

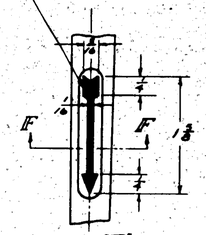

DETAIL "E"

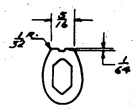

SECTION F-F

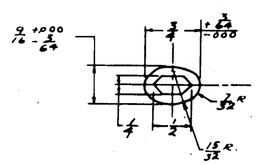

SECTION B-B

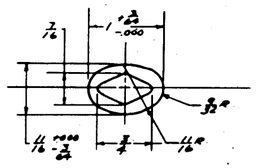

SECTION C-C

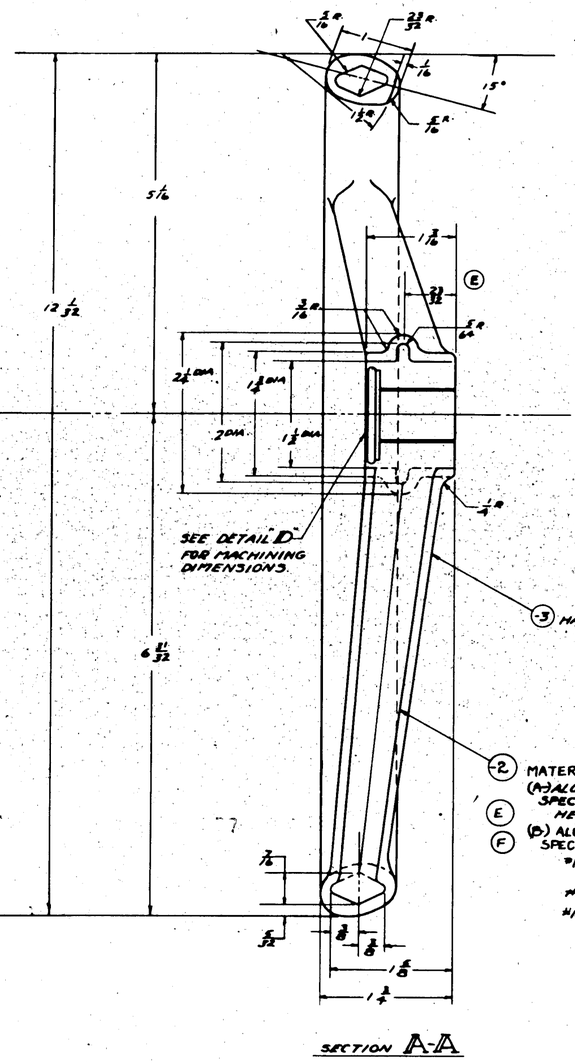

SECTION A-A

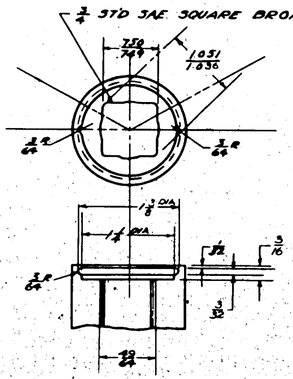

DETAIL "D"

(3) HARD RUBBER COVERING

FINISH
ANODIZE
P-27 PRIMER
2 GREEN PRIME

(2) MATERIAL MAY BE,
(A) ALUM ALLOY CASTING SPEC. AN-QQ-A-332 (ALCOA 220-T4) HEAT TREAT - 42,000 #/SQ. IN., OR
(E) (B) ALUM ALLOY CASTING 195-T6, SPEC. AN-QQ-A-330 CL. II, 32,000 #/SQ. IN. } FOR PBY'S ONLY.
(F)

NOTE -
THIS DRWG. IS IDENTICAL WITH DRWG. AC-143-2 OF (E) THE AMERICAN HARD RUBBER CO.

#1-494	B-24D	28C003	2	
	ALL 26-33	28C003	2 LH	
#1-16	PB2Y-3	32C003-30	2	
#1/16 ON	PB2Y-3	29C3236-1	1	
	PB2Y-3	29C3230-2	1	
	PBY-5, A & B	28C003	2 LH	
	LB-30	32C003	2	
	B-24D	32C3347	2	
	B-24D	32C3347	2	
	B-24C	32C005	2	
	B-24A	32C003-13	1	
	B-24A	32C003-13	1	
	B-24	32C003-31	1	
	B-24	32C003-31	1	
	XB-24	32C003-31	1	
	XB-24	32C003-31	1	
	PB2Y-2	32C003-29	1	
	PB2Y-2	32C003-29	1	
	PBY-4	28C003		
	PBY-3	28C003		
	PBY-2	28C003	28C1091-3	1
	PBY-1	28C003	28C1041-2	1

REPLACES									
REPLACED BY									
LIMIT DIMENSIONS UNLESS OTHERWISE SPECIFIED ±									
CALC. WT.	ACT WT.	O.H.	MODEL	HEAT ASSY	REQ.	PARTS			
SCALE 1/8" = 1'-0"			REQUIREMENTS PER AIRPLANE		MAT.		PARTS LIST PER ASSY		
AC							WEIR		
NAVY NOTED		NOTED		NOTED		NOTED	4-29-38	5-7-37	
MATERIAL		TYPE		HEAT TREAT		FINISH	DRFT	CHK	ENG
CONSOLIDATED AIRCRAFT CORP. BUFFALO N.Y.		NAME	WHEEL-CONTROL YOKE				DEP NAME		
		DWG	G 28C1041						

R 1/20/07

SUPPLIES & EQUIPMENT CLASSIFICATION			
LET	ALTERATION	DATE	BY
B	TRACED TO DATE	5-1-37	
C	11/16 WAS 5/8 1/4 CHMD 3/8, 3/8 C WAS 5/16	11-16-37	
D	SECT'S A-A AND B-B ADDED (M.30)	1-19-38	
E	INCREASED FILLET ON WEBS;	9-19-38	
	ADDED OUTPUT FOR CLEARANCE & VIEW C-C.		
F	INCREASED WEBS TO 9/16 & WERE 1/2	12-2-38	SINK
G	TOP & BOTTOM HOLD FLANGES REMOVED	6-30-41	DELVO
	DIMENSIONS CHANGED: 1 9/16 WAS 1 7/16, 1 17/32 WAS 1 15/32, 3 3/16 WAS 3 1/16		

C.O. 6886

E.O. A6402
P3P5, P3P-5A, OA-10, 28-5MA, MC, ME, MH, MHC

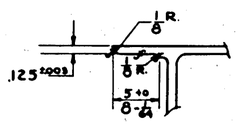

SECTION A-A
(D)

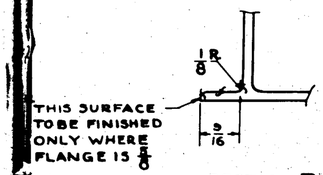

SECTION B-B
(D)

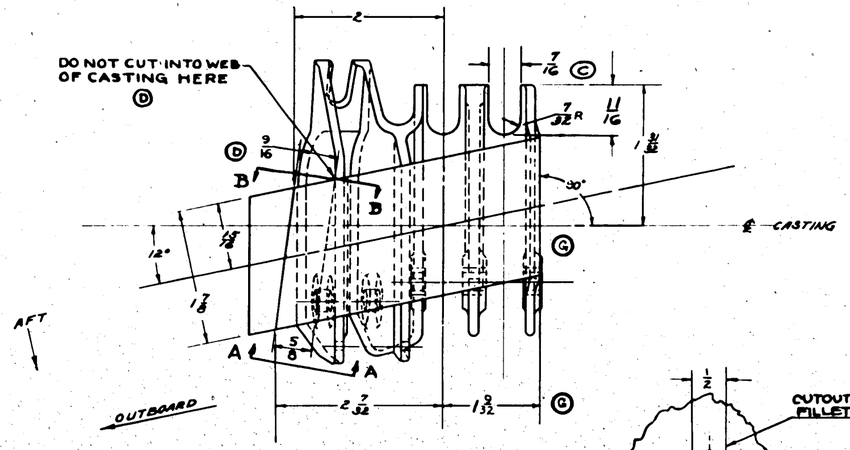

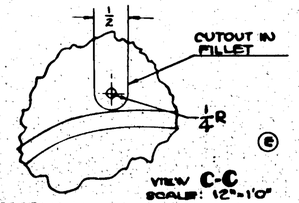

VIEW C-C
SCALE: 12"=1'0"

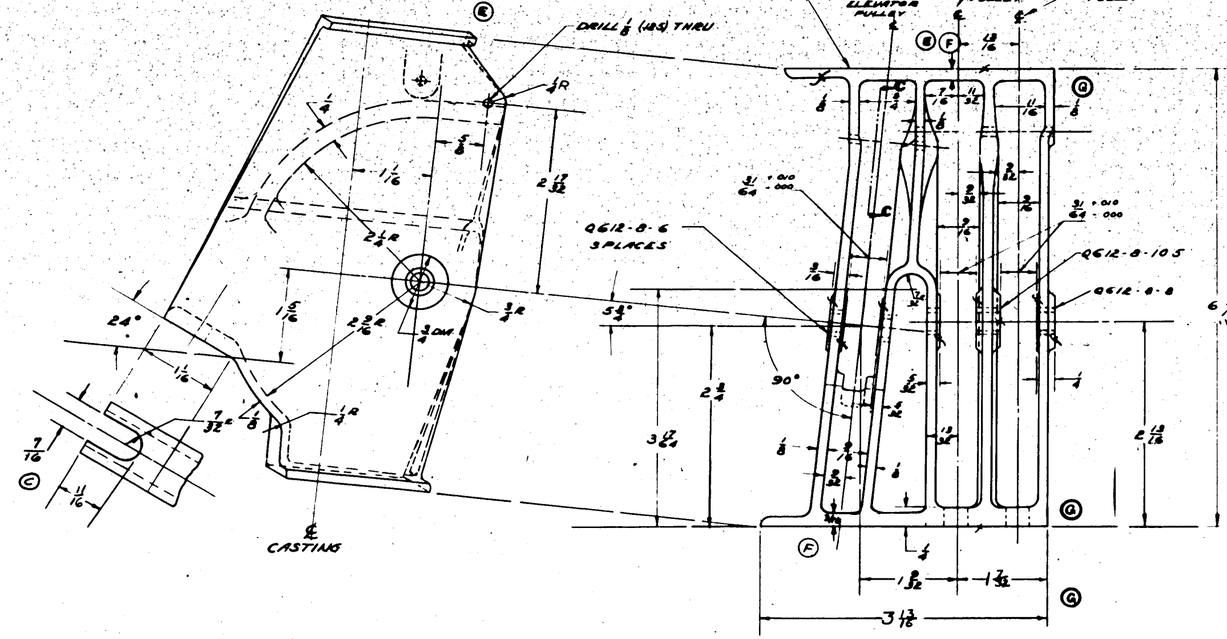

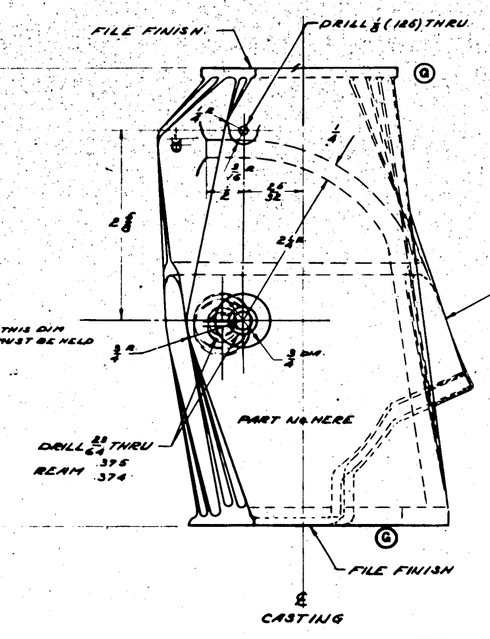

28C1046-2
MAT'L - ALUM ALLOY CASTING
SPEC. - M-186
H.T. 42,000 #/SQ. IN.
FINISH: Z-P.
(BEFORE ASSEM BUSHINGS)

FINISH CODE	
Z	ANODIC TREATMENT
P	P.27 PRIMER
GP	GREEN PRIMER
C	CADMIUM PLATE

NOTE:- ALL RADII NOT GIVEN TO BE 1/8 R.

2	28-5MD	28C1012	/							
2	28-5MN	28C1012	/							
2	28-5ME	28C1012	/							
2	28-5MC	28C1012	/							
2	28-5MA	28C1012	/							
2	P3Y-5B	28C1012	/							
2	P3Y-5A	28C1012	/							
2	P3Y-5	28C1012	/	Q612-B-6	3	3	3	3		
2	P3Y-4	28C1012	/	Q612-B-8	/	/	/	/		
2	P3Y-3	28C1012	/	Q612-B-10.5	/	/	/	/		
2	P3Y-2	28C1012	/							
2	P3Y-1	28C1012	/	28C1046-2	/	/	/	/		
U.N.	MODEL	NEXT ASSY	REQ	PART NO.						
	REQUIREMENTS PER AIRPLANE			MAT.	PARTS LIST PER ASSY. #					
AC					AIRIA			HULLA		
NAVY NOTED	NOTED	NOTED	2 GP		12335	12357				
MATERIAL	SPEC.	SPEC. NUMBER	FINISH							

REPLACES	
REPLACED BY	
LIMIT ON DIMENSIONS UNLESS OTHERWISE SPECIFIED	±
X.C.D.J. APPROVED	5-3-37 DATE
I.S. CALC. MT	ACC MT
SCALE 12"-1'-0"	
CONSOLIDATED AIRCRAFT CORP. BUFFALO N.Y.	
STAMP PT. NO. WHERE SHOWN	

NAME: HOUSING - SURFACE CONT. STA. "2" PORTSIDE PULLEY

DRAWING NO. G 28C1046

R 28C1046

SUPPLIES & EQUIPMENT CLASSIFICATION			
LET	ALTERATION	DATE	BY
A	TRACED	5-1-37	APPROVED
B	RIVET SMALL NEW RIVET PUNCH	11-5-38	APPROVED

C.O. # 4326

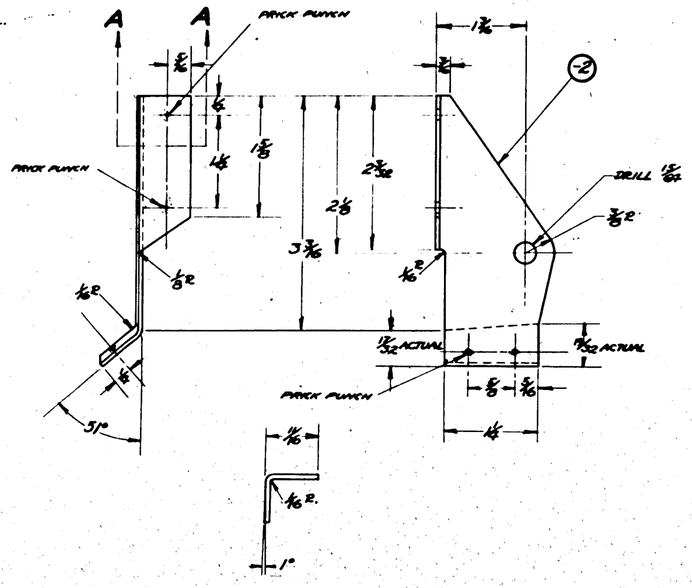

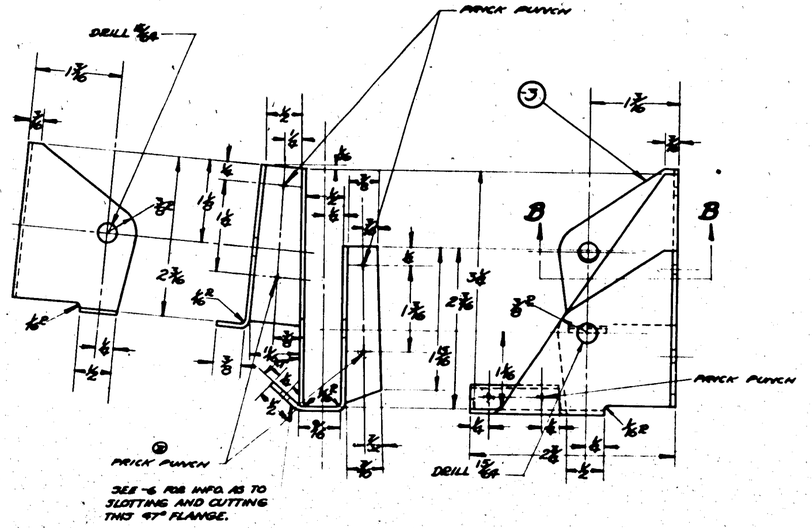

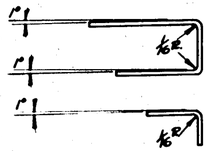

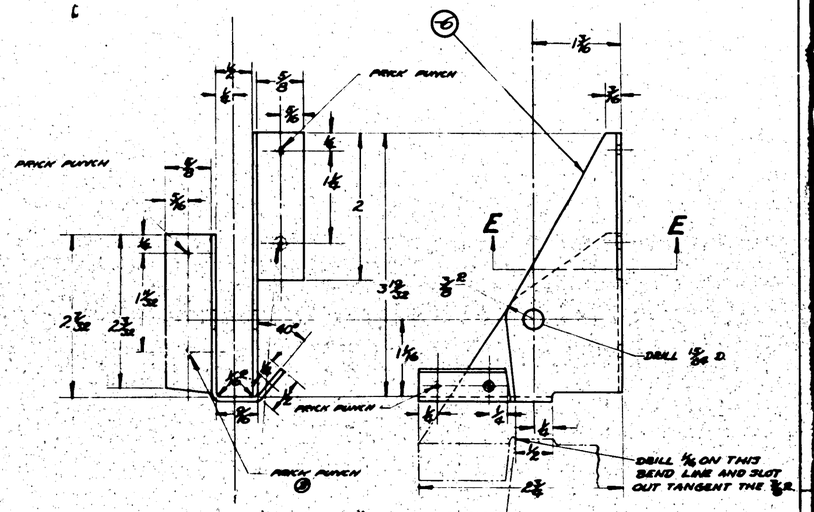
PRICK PUNCH
E
E
DRILL 13/64 D.
PRICK PUNCH
PRICK PUNCH
DRILL 1/16 ON THIS BEND LINE AND SLOT OUT TANGENT THE 3/8 R.
PARTIAL FLAT PATTERN SHOWING SLOT AND SHAPE OF 40° FLANGE
SECTION E-E

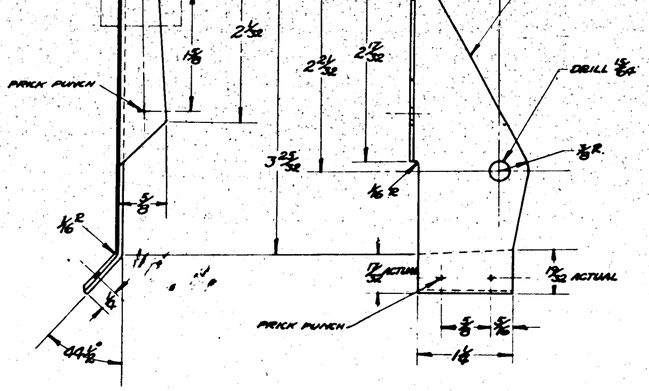

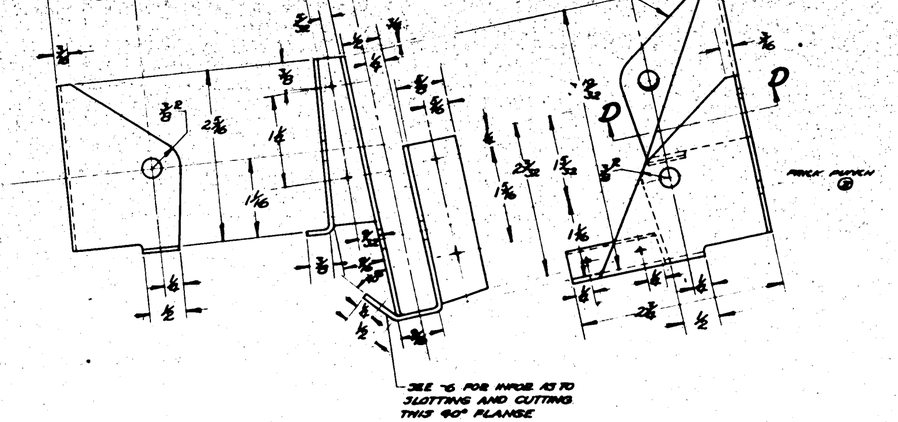

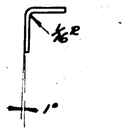

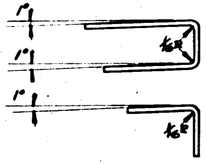

-6	PBY-6	28C1013				
-5	PBY-6	28C1013				
-4	PBY-6	28C1013				
-3	PBY-6	28C1013				
-2	PBY-6	28C1013				
-6	PBY-5	28C1013				
-5	PBY-5	28C1013				
-4	PBY-5	28C1013				
-3	PBY-5	28C1013				
-2	PBY-5	28C1013				
-6	PBY-2	28C1013				
-5	PBY-2	28C1013				
-4	PBY-2	28C1013				
-3	PBY-2	28C1013				
-2	PBY-2	28C1013				
-6	PBY-1	28C1013				
-5	PBY-1	28C1013				
-4	PBY-1	28C1013				
-3	PBY-1	28C1013				
-2	PBY-1	28C1013				

CUT	DR
-6	06
-5	07
-4	03
-3	07
-2	03

-6	ANC-5	28C1013				
-5	ANC-5	28C1013				
-4	ANC-5	28C1013				
-3	ANC-5	28C1013				
-2	ANC-5	28C1013				

REPLACES

REPLACED BY

LIMIT ON SHRINKING WELDS ± .010
STRAIGHTENING & PUNCHING

APPROVED 6-1-37
DATE

NOTED
CAL. WT. ACT. WT.

SCALE 12" = 1'-0"

O.H.	MODEL	NEXT ASSY.	REQ.	PART NO.

REQUIREMENTS PER AIRPLANE

PARTS LIST PER ASSY.

	MAT.				
AC ALL PARTS			GP		
NAVY .032" 24S ALCLAD sheet	.032" 24S ALCLAD sheet	3253 COVER	2-P-2 ASSY		
MATERIAL	SPEC.	HEAT TREAT	FINISH	DRAFT	CHECK	ESTM.

CONSOLIDATED AIRCRAFT CORP. BUFFALO, N.Y.

STAMP PT. No. WHERE SHOWN

NAME BRACKET CONTROL BULKHEAD #3

OPP. HAND

SIZE G DWG. 28C1053

Sullivan-Hodgdon Co. Inc. Buffalo
Imperial Tracing Cloth

LET	ALTERATION	DATE	BY
B	TRACED	2-9-38	[illegible]
C	WAS (5) AN435-4 RIVETS REPLACED BY (6) AN442-D4 ON FACE & B/M	6-9-41	[illegible]
D	NOTE, "FAFNIR---- A543," WAS "BEARING, FAFNIR A543." WR CHG. [illegible]	6-22-42	[illegible]
E	CREATED -2 ASSY. CALC. WT 12.42	6-22-42	[illegible]
F	"FAFNIR # B-543," WAS "FAFNIR #A-543." NO. WT. CHG.	8-6-42	[illegible]

E.O. 35281 (C)
E.O.# A32797 (E)
E.O.# A51270 (F)

SUPPLIES & EQUIPMENT CLASSIFICATION

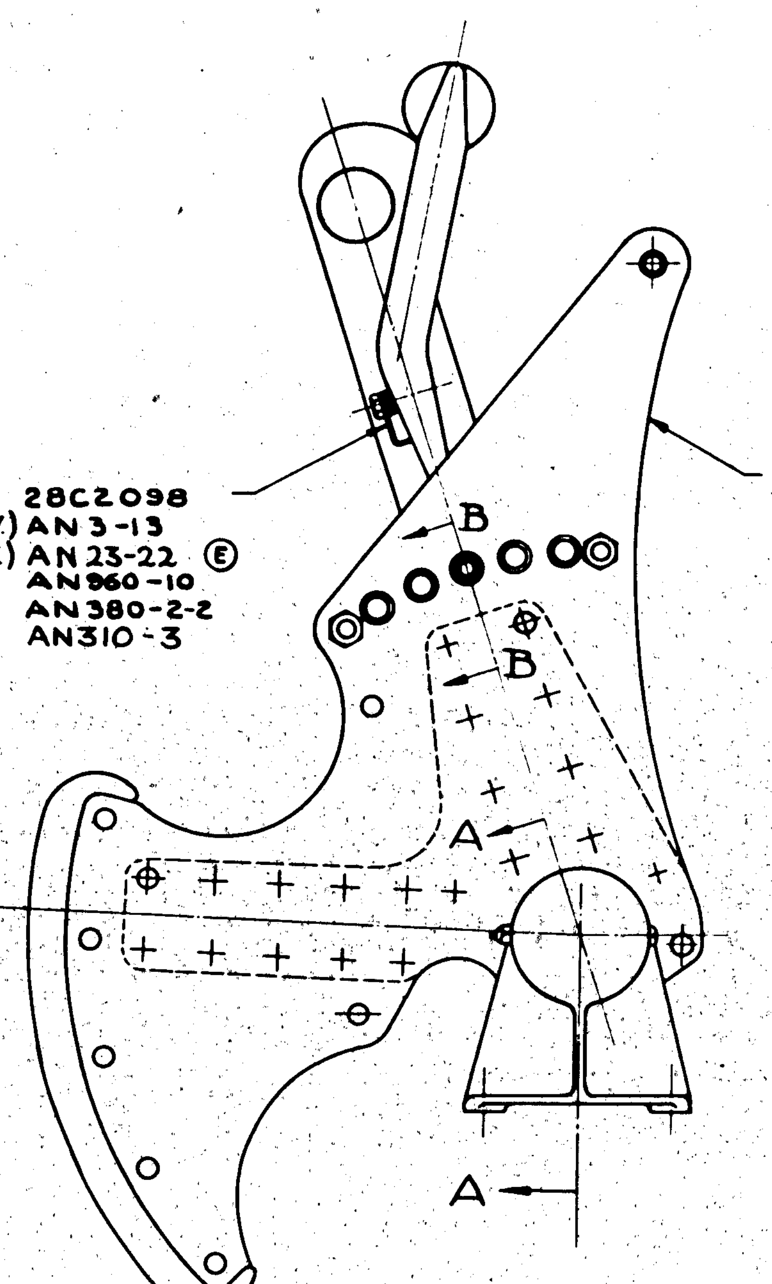

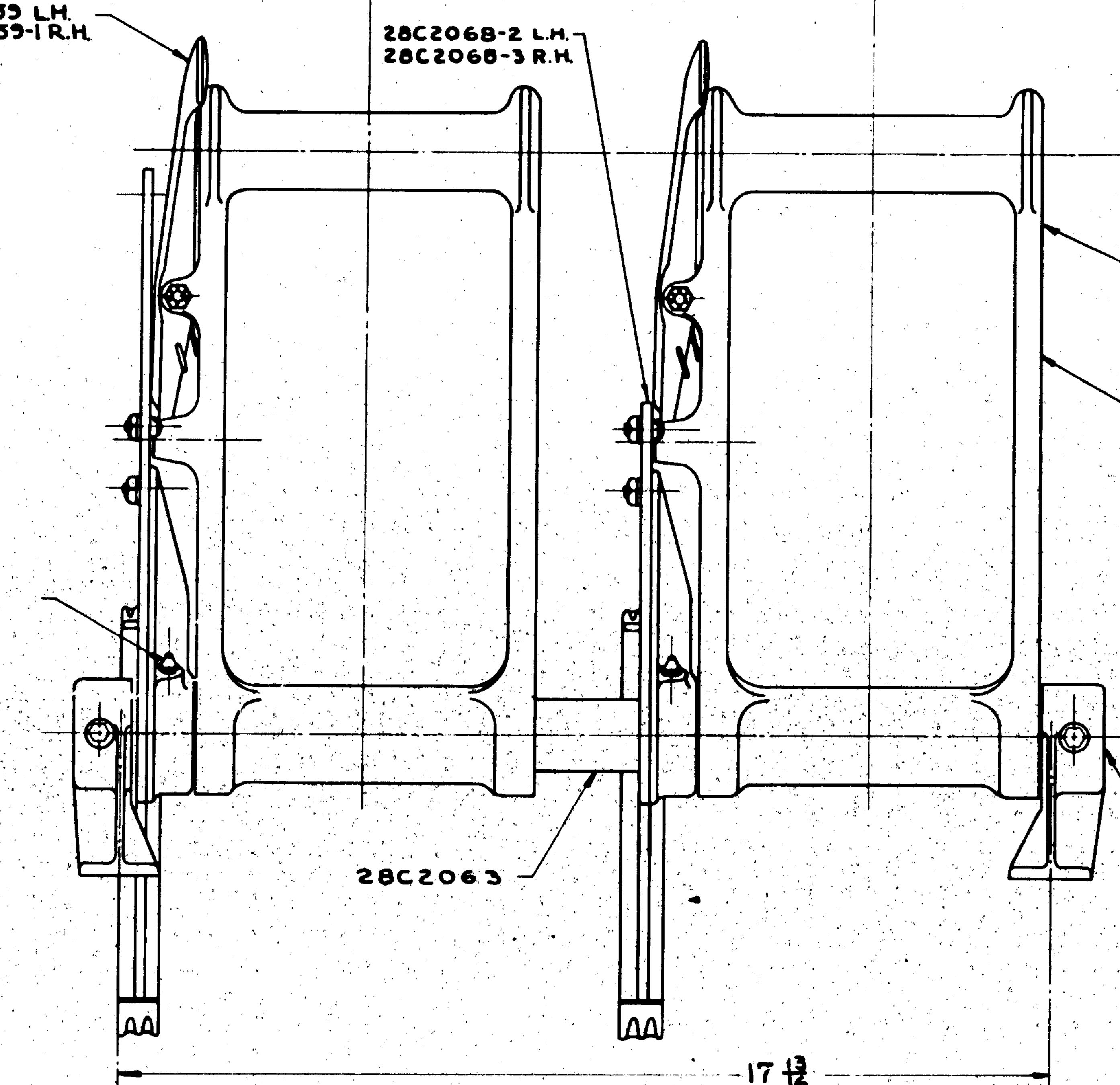

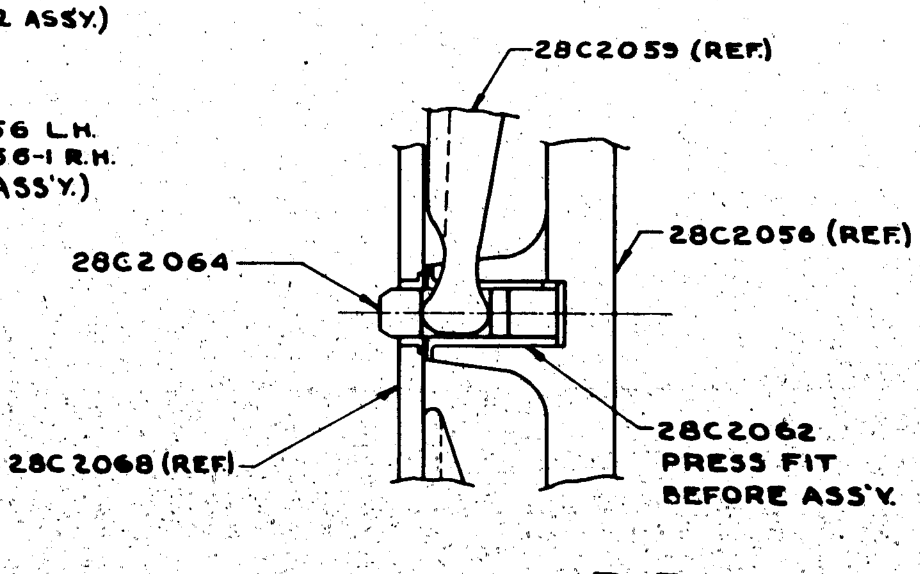

SECTION B-B
SCALE 12"=1'-0"

FINISH:-
EXPOSED SECTION OF 28C2063, ~~2AL~~ GREEN PRIME

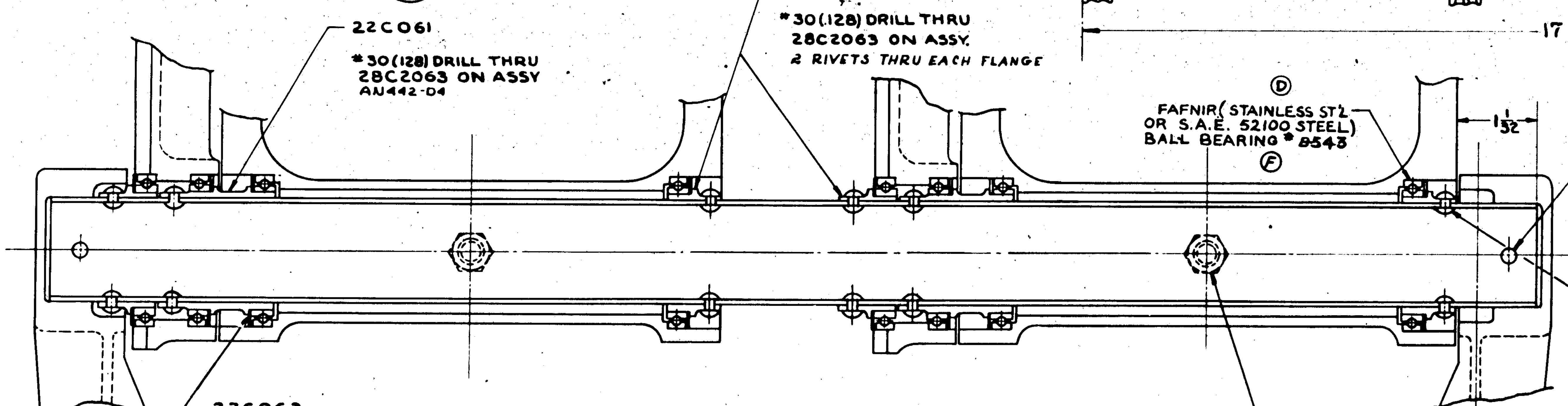

SECTION A-A
SCALE 12"=1'-0"

28C2005 - L.H. SHOWN
28C2005-1 R.H. OPPOSITE

D.H.	MODEL	NEXT ASSY.	REQ.
-2L	PBY5B	28C2008	1
-2R	PBY5B	28C2008	1
-L	28-5 MA	28C2008	1
-R	28-5 MA	28C2008	1
-L	28-5 MC	28C2008	1
-R	28-5 MC	28C2008	1
-L	28-5 ME	28C2008	1
-R	28-5 ME	28C2008	1
-L	28-5 MN	28C2008	1
-R	28-5 MN	28C2008	1
-2L	PBY-5	28C2008	1
-2R	PBY-5	28C2008	1
-L	PBY-5	28C2008	1
-R	PBY-5	28C2008	1
-1	PBY-3	28C2008	1
	PBY-3	28C2008	1
-1	PBY-2	28C2008	1
	PBY-2	28C2008	1

REQUIREMENTS PER AIRPLANE

CONTR. 9487E-916 on (-2L, -2R)
CONTRACTS # 70496A 9487E-17030 (-L, -R)

PART NO.	-0 LH REQ.	-0 RH REQ.	-2 LH REQ.	-2 RH REQ.
AN442-D4				
AN960-10	4	4	4	4
AN380-2-2	4	4	4	4
AN310-3	4	4	4	4
AN286-1	4	4	4	4
AN3-24	2	2	2	2
AN3-13	2	2		
AN23-22			2	2
28C6030-2R				2
28C6030-2L			2	
FAFNIR # [illegible]	8	8	8	8
22C063	8	8	8	8
22C062	4	4	4	4
22C061	2	2	2	2
28C2068-3		1		1
28C2068-2	1		1	
28C2068-1		1		1
28C2068	1		1	
28C2098	2	2	2	2
28C2064	2	2	2	2
28C2063	1	1	1	1
28C2062	2	2	2	2
28C2061	2	2	2	2
28C2059-1		2		2
28C2059	2		2	
28C2056-1		2		
28C2056	2			

PARTS LIST PER ASSY.

REPLACES	
REPLACED BY .010	APPROVED [illegible] DATE 2-9-38
LIMIT ON DIMENSIONS UNLESS + OTHERWISE SPECIFIED -	CALC. WT. 12.3 (-0 ASSY.) 12.42 (-2 ASSY.) ACT. WT.
	SCALE 6"=1'-0" & NOTED

[redacted]

AC				12-4-36 [illegible]
NAVY			NOTED	HACK
MATERIAL	SPEC.	HEAT TREAT	FINISH	DRAFT / CHECK / EXAM. / ENG.

CONSOLIDATED AIRCRAFT CORP.
SAN DIEGO, CALIF.

NAME: PEDAL ASSEMBLY
CONTROLS - RUDDER

OPP. HAND 28C2005-1
DWG. G 28C2005

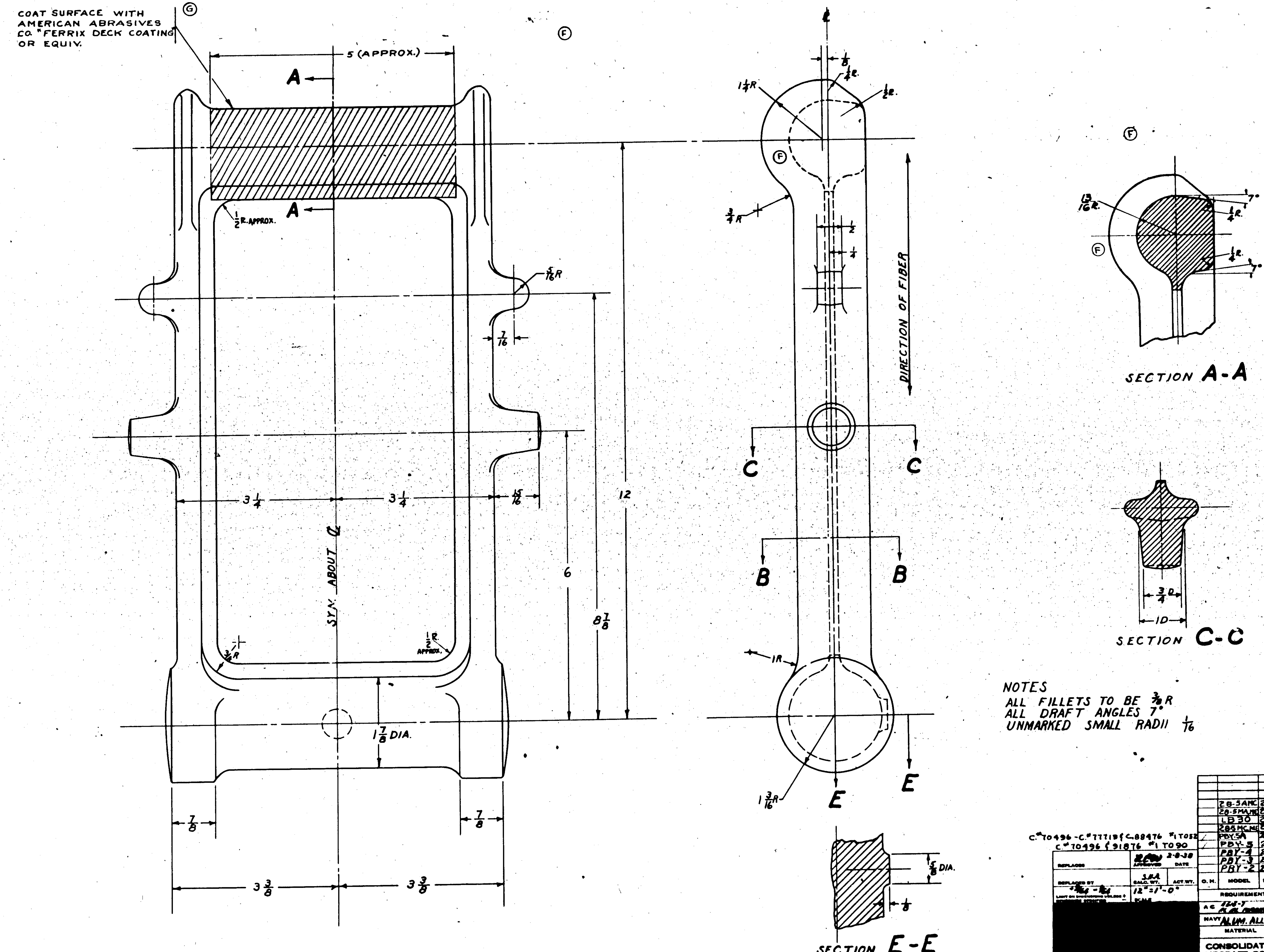

NOTES
ALL FILLETS TO BE 3/8 R
ALL DRAFT ANGLES 7°
UNMARKED SMALL RADII 1/16

SUPPLIES & EQUIPMENT CLASSIFICATION

	LET	ALTERATION	DATE	BY
	C	TRACED	2-8-38	
E.O.#37282	D	CHANGED M.S. AL. AL. FORGING, SPEC M277, H.T.-65000#/□" AS REC'D FINISH-NONE TO A51S-T AL. AL. FORGING SPEC. 14ST GR.3 H.T. 64000#/□" AS REC'D FINISH NONE	8-15-41	
	E	REMOVED SECTIONS "D-D" AND "F-F"; REDESIGNED SECT. "A-A" AND ADDED 3/16 RIB AT INSIDE PARTING LINE. TOL. CHG'D. +1/64 - 1/64 WAS ±.015	3-19-42	
FORGING CHG'D E.O. A34358	F	REMOVED SERRATIONS & ALL PERTAINING NOTES & DIMS. WT. CHG NEG.	4-14-42	
E.O.A94868	G	TO FACE ADD. 5" DIM. & NOTE: "COAT ---- OR EQUIV." WT. CHG NEG.	1-29-43	MOE

C#70496 - C#77719 { C.88476 #1 T052
C#70496 { 91876 #1 T090

O.H.	MODEL	NEXT ASSY.	REQ.
	28-5AMC	28C2056	4
	28-5MA	28C2056	4
	LB30	28C2056	4
	28-5MC	28C2056	4
	PBY-5A	28C2056	4
	PBY-5	28C2056	4
	PBY-4	28C2056	
	PBY-3	28C2056	
	PBY-2	28C2056	

REQUIREMENTS PER AIRPLANE | ST'D PARTS | MAT. | PARTS LIST PER ASSY. | PART NO. | LH RH REQ.

REPLACES | APPROVED 2-8-38 DATE
REPLACED BY | CALC. WT. | ACT. WT.
LIMIT ON DIMENSIONS UNLESS OTHERWISE SPECIFIED ±1/64 - 1/64 | SCALE 12"=1'-0"

[redacted]

	MATERIAL	SPEC.	HEAT TREAT	FINISH
AC	1265-? AL. AL. FORGING			
NAVY	ALUM. ALLOY	14ST GR.3	64,000#/□" AS REC'D	NONE

DRAFT 3-20-36 GREEN | CHECK 4-1-36 | EXAM.

CONSOLIDATED AIRCRAFT CORP. SAN DIEGO, CALIF.

NAME: PEDAL - CONTROL - RUDDER - FORGING

OPP. HAND
DWG. SIZE G 28C20

SUPPLIES & EQUIPMENT CLASSIFICATION			
LET	ALTERATION	DATE	BY
D	TRACED	2/5/30	[illegible]
E	REVISED MAT'L NOTE FOR -6 WAS "3/4 x 3/4 x 1/16 AL. ALL EXT -245 ALCOA DIE * K5401 SPEC 46A8 COND T." ADDED 3/4 DIMS. SIDE VIEW WT CHG NEG.	3-31-30	[illegible]
F	AT CALL OUT FOR -6 ADDED "OR K5401 x 9 1/8, AL. AL. EXTR., SPEC. QQ-A-354-T." NO WT CHG.	10-11-43	[illegible]

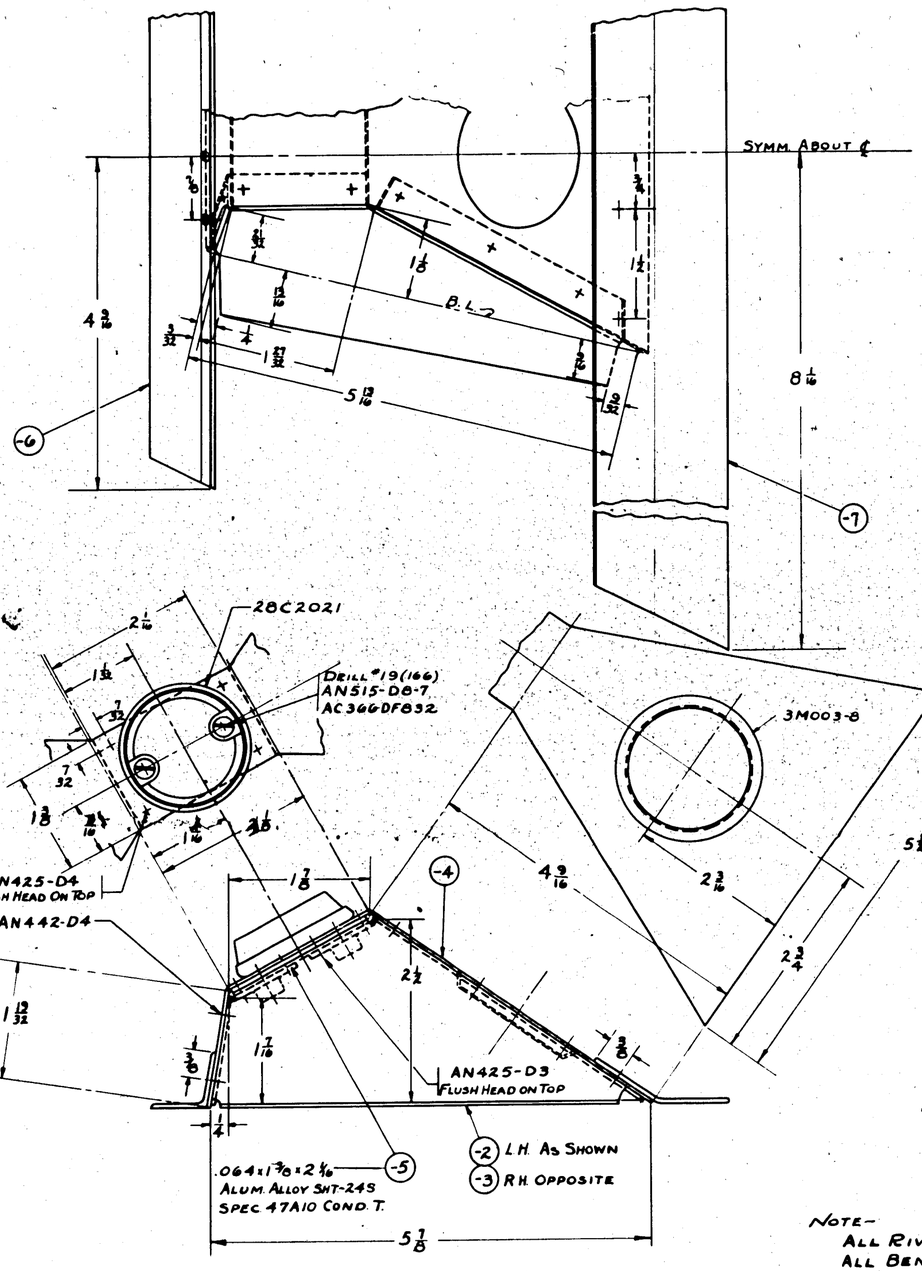

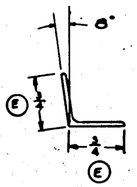

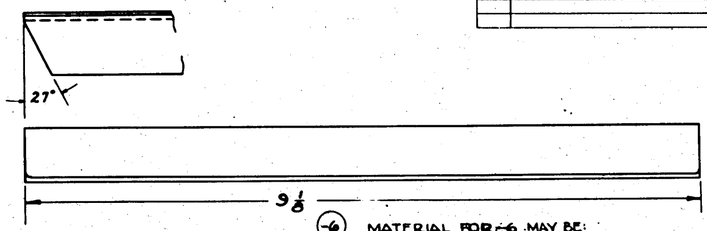

-6 MATERIAL FOR -6 MAY BE:
(A) .072 x 1 5/8 x 9 1/4, 24ST. ALCLAD SHT, SPEC.
(E) " QQ-A-362 COND T. BEND RADII TO BE 3/32, OR.
(F) (B) K5401 x 9 1/4, AL. AL EXTR., SPEC. QQ-A-354-T.

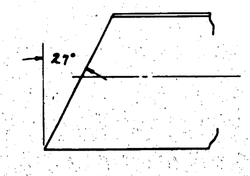

-7 .064 AL. AL. SHEET-24S SPEC. #47A10 COND. T.

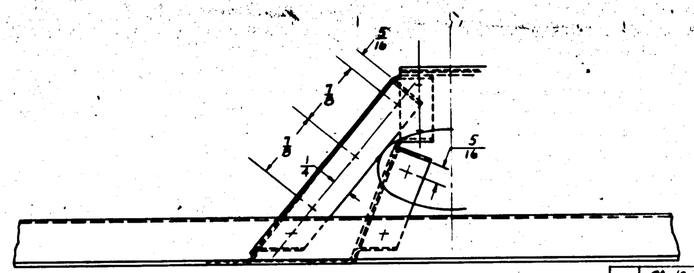

NOTE-
ALL RIVETS TO BE AN442-D4
ALL BEND RADII TO BE 1/16 UNLESS OTHERWISE NOTED
ALL FLANGES TO BE 1/2" UNLESS OTHERWISE NOTED.
BEND LINES ON -2 & -3 ARE TO BE IN LINE WITH EDGES OF -4 WHEN ASSEMBLED

MATERIAL-
(-4) .040 AL AL SHT-24S SPEC. 47A10 COND T.
-5, -6, & -7 NOTED
(-2) & (-3) .040 ALCLAD-2450-47A10 COND A KT SPEC. 3R-53A

GP-GREEN PRIME
FINISH CODE
Z ALODINE TREATMENT
P A-27 PRIMER
AP ALUMINIZED PRIMER
C CADMIUM PLATE

O. H.	MODEL	NEXT ASSY.	REQ.	STD PARTS	REQ.	PART NO.	REQ.	REQ.	REQ.	REQ.	REQ.
	OA-10	28C2012	1								
	28E-AMY	28C2013	1								
	28E-AMX	28C2013	1								
	28BMN	28C2013	1								
	28EMC	28C2013	1								
	28EME	28C2013	1								
	28BMA	28C2013	1								
	PBY-5A	28C2013	1			-7	1				
	PBY-5B	28C2013	1	AN425-D4	4	-6	1				
	PBY-4	28C2013		AN425-D3	4	-5	1				
	PBY-3	28C2013		AN515-D8-7	2	-4	1				
	PBY-2	28C2013		AN442-D4	16	-3	1				
	PBY-5	28C2013	1	AC366DF832	2	-2	1				

REQUIREMENTS PER AIRPLANE | MAT. | PARTS LIST PER ASSY.

REPLACES	APPROVED	DATE
	[illegible]	2-9-30
REPLACED BY	CALC. WT.	ACT. WT.
	12	
LIMIT OF DIMENSIONS	SCALE	12" = 1'-0"

A C
NAVY NOTED (MATERIAL) | NOTED (SPEC.) | NOTED (HEAT TREAT) | Z-P-26P (FINISH)
3-30-30 | MILLER | DRAFT | CHECK | C.C.F. | EXAM. | Cn | R | ENG.

CONSOLIDATED AIRCRAFT CORP. SAN DIEGO, CALIF.

NAME STOP-CONTROL-ELEVATOR-FRONT-ELASTIC

OPP. HAND | SIZE G | 28C2022

28C2022

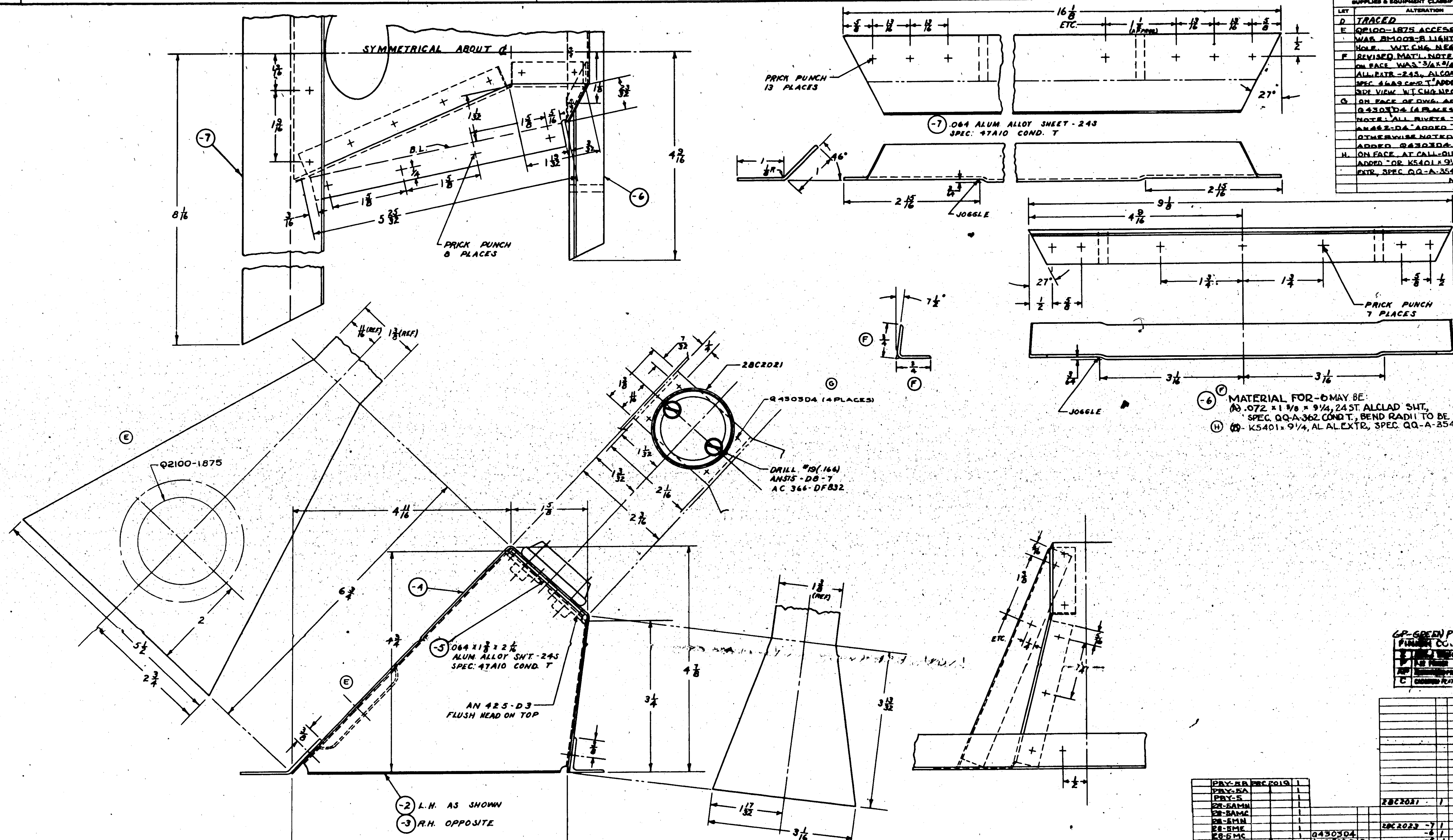

LET	ALTERATION	DATE	BY
D	TRACED	2-8-38	
E	Q2100-1875 ACCESS HOLE WAS 8M003-8 LIGHTNING HOLE. WT. CHG. NEG.		
F	REVISED MAT'L NOTE FOR -6 ON FACE. WAS "3/4 x 3/4 x 1/16 AL. ALL. EXTR. -24S, ALCOA DIE #K5401 SPEC 46A9 COND T" ADDED 3/4 DIMS SIDE VIEW. WT. CHG. NEG.	3-31-43	
G	ON FACE OF DWG. ADDED Q430304 (4 PLACES). TO NOTE: ALL RIVETS TO BE AN442-D4 ADDED "UNLESS OTHERWISE NOTED" IN B/M ADDED Q430304. NO WT CHG	10-5-43	
H.	ON FACE, AT CALL-OUT FOR -6 ADDED "OR K5401 x 9 1/4, AL. AL. EXTR., SPEC QQ-A-354-T." NO WT. CHG	10/20/43	

(-6) MATERIAL FOR -6 MAY BE:
(A) .072 x 1 3/8 x 9 1/4, 24 ST. ALCLAD SHT., SPEC. QQ-A-362 COND T., BEND RADII TO BE 3/32, OR
(H) (B) - K5401 x 9 1/4, AL. AL. EXTR., SPEC. QQ-A-354-T

GP-GREEN PRIME

MATERIAL:
(-2)(-3)(-4) .040 ALUM. ALLOY SHEET -24S SPEC: 47A10 COND. T
-5, -6, & -7 NOTED

NOTES
(G) ALL RIVETS TO BE AN442-D4 UNLESS OTHERWISE NOTED.
ALL BEND RADII TO BE 1/16 UNLESS OTHERWISE NOTED.
ALL FLANGES TO BE 1/2" UNLESS OTHERWISE NOTED.
BEND LINES ON -2 & -3 ARE TO BE IN LINE WITH EDGES OF -4 WHEN ASSEMBLED

MODEL	NEXT ASSY.	REQ.
PBY-5B	28C2019	1
PBY-5A		1
PBY-5		1
28-5AMN		1
28-5AMC		1
28-5MN		1
28-5ME		1
28-5MC		1
28-5MA		1
PBY-4	28C2019	
PBY-3	28C2019	
PBY-2	28C2019	

ST'D PARTS	REQ.	PART NO.	REQ.
		28C2021	1
		28C2023 -7	1
Q430304		-6	1
AN515D8-7	2	-5	1
AN442D4	23	-4	1
AN426D3	4	-3	1
AC366DF832	2	28C2023 -2	1

REQUIREMENTS PER AIRPLANE — MAT. — PARTS LIST PER ASSY.

REPLACES	APPROVED 2-8-38 DATE
REPLACED BY	CALC. WT. .63 SMA — ACT. WT.
LIMIT ON DIMENSIONS UNLESS OTHERWISE SPECIFIED ± 1/64" & ± 1/2°	SCALE 12" = 1'-0"

	MATERIAL	SPEC.	HEAT TREAT	FINISH
AC				
NAVY	NOTED	NOTED	NONE	2-P-28R

DRAFT 11-26-36 · CHECK · EXAM.

CONSOLIDATED AIRCRAFT CORP. SAN DIEGO, CALIF.

NAME: STOP - CONTROL - ELEVATOR - AFT - ELASTIC

DWG. SIZE G — 28C2023 — OPP. HAND

28C2023

LET	ALTERATION	DATE	BY
H (CONT)	FOR -12 & -13 ADDED "OR K5401 x 9 5/16, AL. AL. EXTR. SPEC QQ-A-354-T." FOR -14 & -15 ADDED "OR K5401 x 14 1/2, AL. AL. EXTR. SPEC QQ-A-354-T." FOR -16 & -17 ADDED "OR K5401 x 11 7/16, AL. AL. EXTR. SPEC QQ-A-354-T." NO WT. CHG.	[illegible]	[illegible]

LET	ALTERATION	DATE	BY
G	ON FACE OF DWG. 3/16 JOGGLE WAS 1/16 JOGGLE NO. WT. CHG.	10-7-43	WEICH
H	AT CALLOUT FOR -2, ADDED "OR K9876 x 14 7/16, AL. AL. EXTR. SPEC QQ-A-354-T." FOR -4 & -5 ADDED "OR K5401 x 10 7/8, AL. AL. EXTR. SPEC QQ-A-354-T." FOR -6 & -7 ADDED "OR K5401 x 13 1/2, AL. AL. EXTR. SPEC. QQ-A-354-T." FOR -8 & -9 ADDED "OR K9876 x 7 1/16, AL. AL. EXTR. SPEC QQ-A-354-T." FOR -10 & -11 ADDED "OR K9876 AL. AL. EXTR. SPEC QQ-A-354-T."		

SUPPLIES & EQUIPMENT CLASSIFICATION

LET	ALTERATION	DATE	BY
C	TRACED	2/9/39	[illegible]
D	ADDED PBY-5 APP. & NOTE	[illegible]	[illegible]
E	ADDED 28C2025-8-6-7 & -8 FOR PBY-5 IN B/M & REVISED NOTE AT STA 6	[illegible]	[illegible]
F	ON FACE, FOR -2, REPLACED "1/2 x 3/4 x 1/16 x 14 7/16 L.G. ALUM. ALLOY ANGLE (24ST) ALCOA DIE # K9876, SPEC. 46A9 COND. T" WITH "Y-6-A6T x 14 7/16"; FOR -8 & -9, REPLACED "1/2 x 3/4 x 1/16 x 7 1/16 L.G. ALUM. ALLOY ANGLE (24ST) ALCOA DIE # K9876, SPEC. 46A9 COND. T" WITH "Y-6-A6T x 7 1/16"; FOR -10 & -11, REPLACED "1/2 x 3/4 x 1/16 x 9 5/16 L.G. ALUM. ALLOY ANGLE (24ST) ALCOA DIE # K9876, SPEC. 46A9 COND. T" WITH "Y-6-A6T x 9 5/16"; FOR -12 & -13, REPLACED "3/4 x 3/4 x 1/16 x 9 5/16 L.G. (24ST) ALUM. ALLOY ANGLE ALCOA DIE # K5401, SPEC. 46A9 COND. T" WITH "Y-2-A28T x 9 5/16"; FOR -14 & -15, REPLACED "3/4 x 3/4 x 1/16 x 14 1/2 L.G. (24ST) ALUM. ALLOY ANGLE ALCOA DIE # K5401, SPEC. 46A9 COND. T" WITH "Y-2-A28T x 14 1/2"; FOR -16 & -17, REPLACED "3/4 x 3/4 x 1/16 x 11 7/16 L.G. ALUM. ALLOY ANGLE (24ST) ALCOA DIE # K5401, SPEC. 46A9 COND. T" WITH "Y-2-A28T x 11 7/16"; FOR -4 & -5, REPLACED [illegible] WITH "Y-2-A28T x 10 7/8"; ADDED [illegible] FOR 12-5 [illegible]	[illegible]	[illegible]

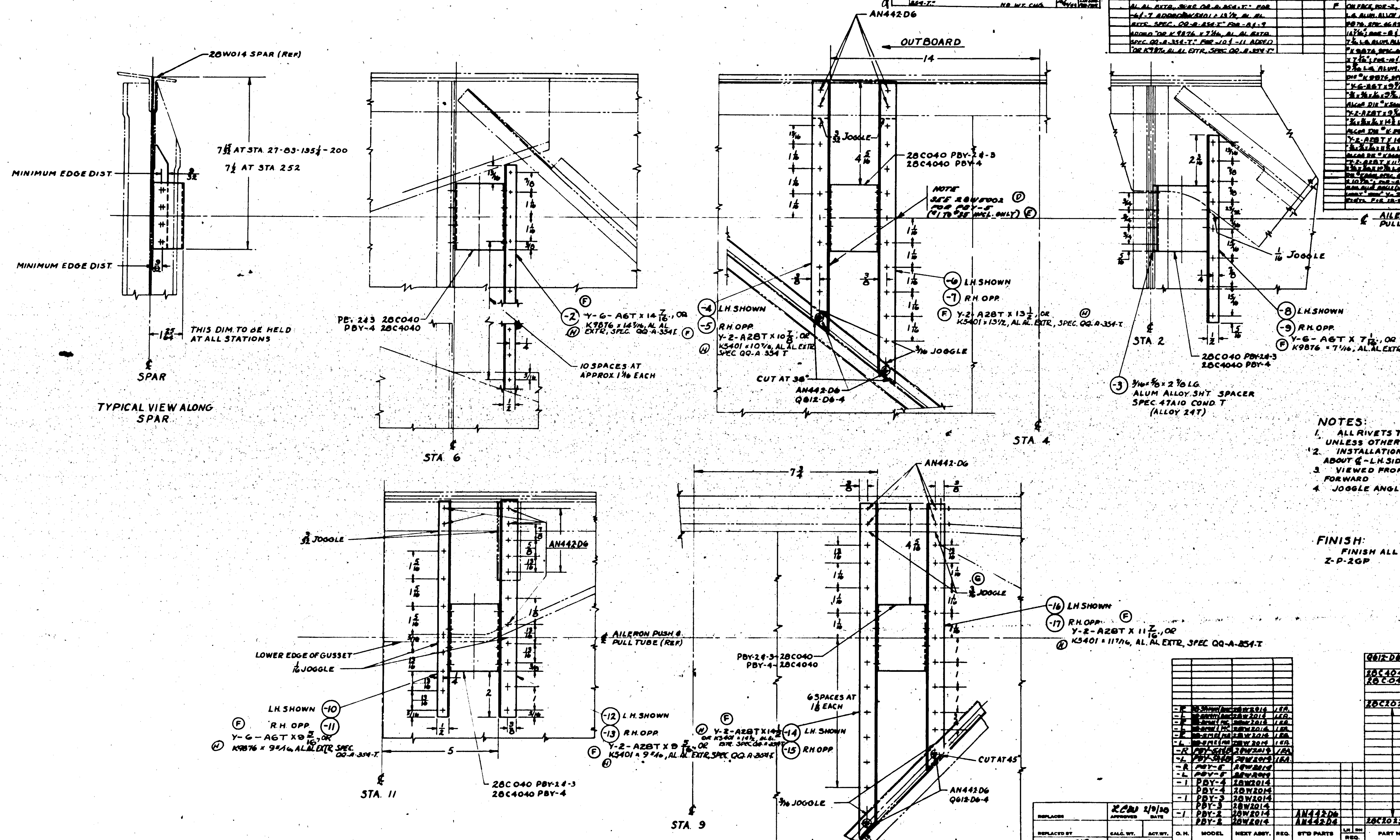

NOTES:
1. ALL RIVETS TO BE AN442-D4 UNLESS OTHERWISE NOTED
2. INSTALLATION IS SYMMETRICAL ABOUT ℄ - L.H. SIDE SHOWN.
3. VIEWED FROM AFT LOOKING FORWARD
4. JOGGLE ANGLES WHERE NECESSARY.

FINISH:
FINISH ALL DETAILED PARTS Z-P-2GP

GP-GREEN PRIME

O. H.	MODEL	NEXT ASSY.	REQ.
-R	[illegible]	28W2014	1 EA.
-L	[illegible]	28W2014	1 EA.
-R	[illegible]	28W2014	1 EA.
-L	[illegible]	28W2014	1 EA.
-R	[illegible]	28W2014	1 EA.
-L	[illegible]	28W2014	1 EA.
-R	PBY-5 [illegible]	28W2014	1 EA.
-L	PBY-5 [illegible]	28W2014	1 EA.
-R	PBY-5	28W2014	
-L	PBY-5	28W2014	
-1	PBY-4	28W2014	
	PBY-4	28W2014	
-1	PBY-3	28W2014	
	PBY-3	28W2014	
-1	PBY-2	28W2014	
	PBY-2	28W2014	

REQUIREMENTS PER AIRPLANE

STD PARTS	MAT.
AN442D6	
AN442D4	

PART NO.	PBY-2 LH	PBY-2 RH	PBY-3 LH	PBY-3 RH	PBY-4 LH	PBY-4 RH	PBY-5 LH	PBY-5 RH
Q612-D6-4	4	4	4	4	4	4	2	2
28C4040	-	-	-	-	5	5	5	5
28C040	5	5	5	5	-	-	-	-
28C2025-17		1		1		1		1
-16	1		1		1		1	
-15		1		1		1		1
-14	1		1		1		1	
-13		1		1		1		1
-12	1		1		1		1	
-11		1		1		1		1
-10	1		1		1		1	
-9		1		1		1		1
-8	1		1		1		1	
-7		1		1		1		1
-6	1		1		1		1	
-5		1		1		1		1
-4	1		1		1		1	
-3	1	1	1	1	1	1	1	1
28C2025-2	1	1	1	1	1	1	1	1

PARTS LIST PER ASSY.

REPLACES		APPROVED L.C.B.U.	DATE 2/9/39
REPLACED BY		CALC. WT.	ACT. WT.
LIMIT ON DIMENSIONS UNLESS ... .015		SCALE 6" = 1'-0"	

A C				DRAFT	CHECK	ENGR.
NAVY NOTED	NOTED	NONE	NOTED	[illegible] 1-2-39	Cn	MILLER
MATERIAL	SPEC.	HEAT TREAT	FINISH			

CONSOLIDATED AIRCRAFT CORP. SAN DIEGO, CALIF.

NAME: BRACKET INSTALL. AILERON CONTROL TUBE

OPP. HAND 28C2025

DWG. SIZE G — 28C2025

LET	ALTERATION	DATE	BY
C	TRACED & UP TO DATE	2-8-37	
D	WAS 17 P8 GR.-PBG		
E	JOGGLE 1/8 WAS JOGGLE 1/16		
F	-6 ADDED TO DWG. & B/M	1-27-41	

SUPPLIES & EQUIPMENT CLASSIFICATION

BREWSTER E.O. 275
BREWSTER E.O. 311
PBY-5 EO 311A

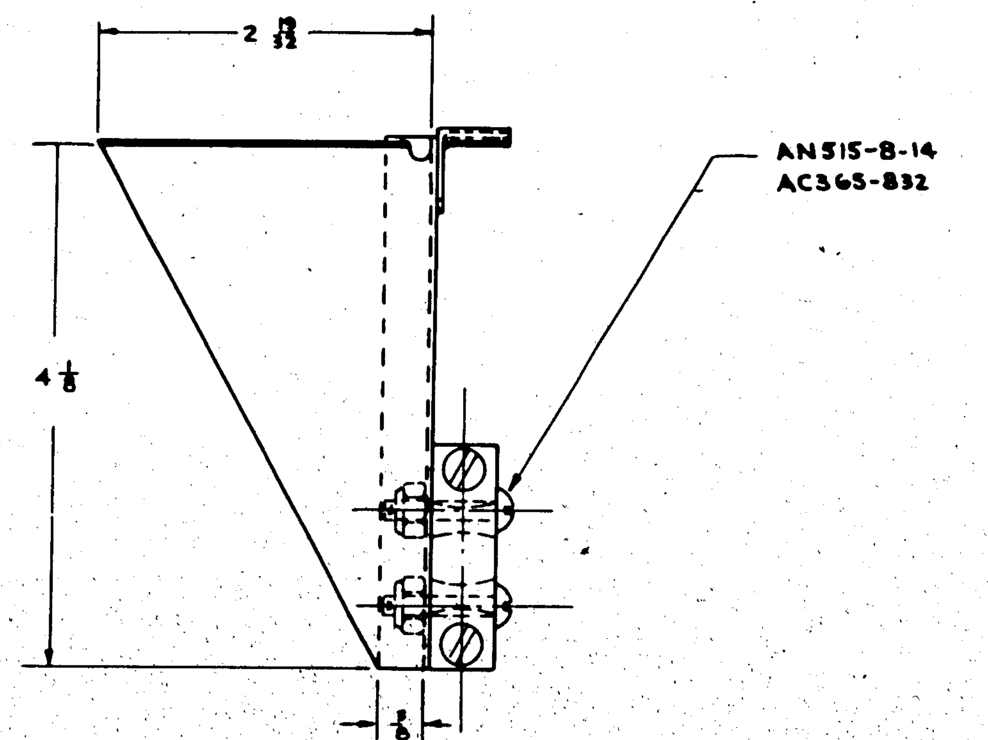

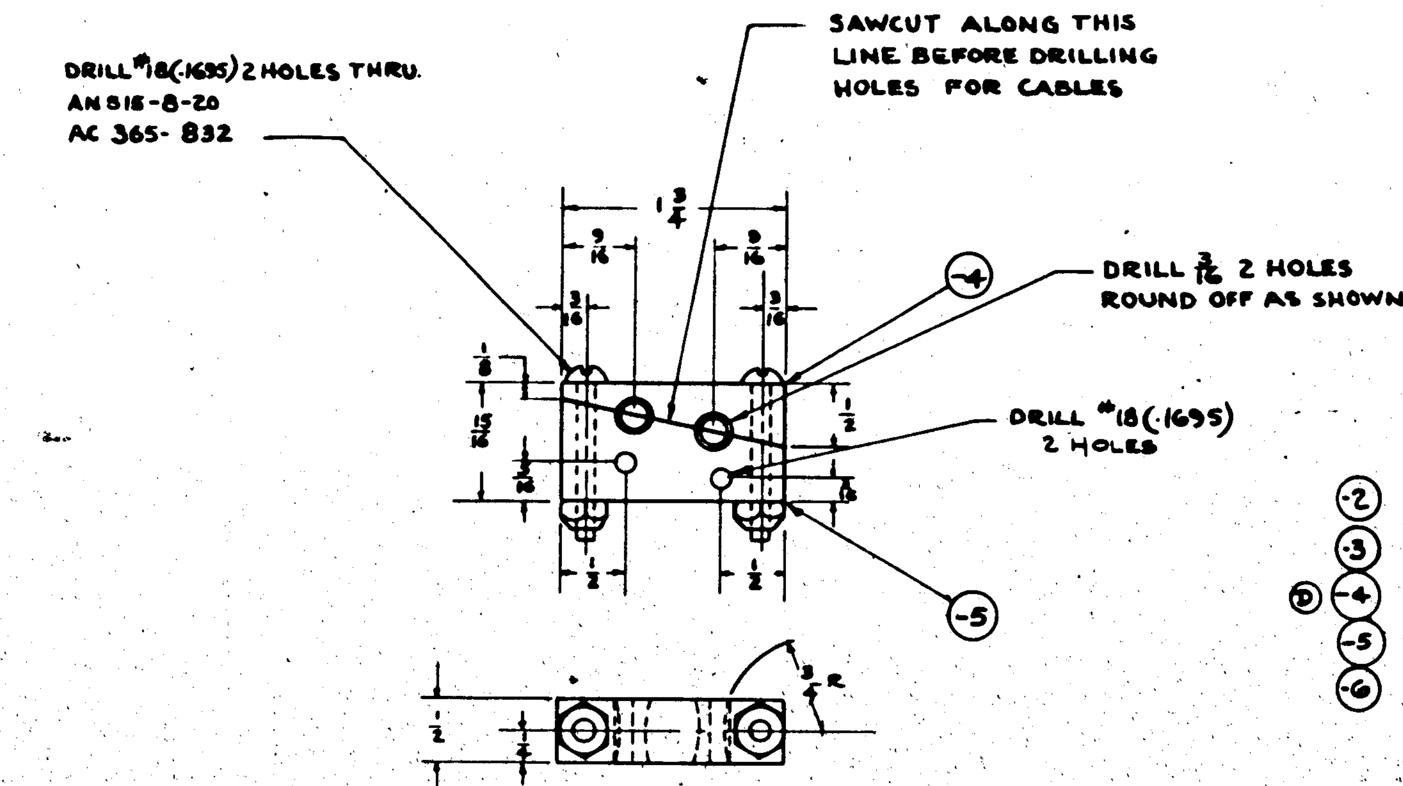

-2 9/16 x 9/16 x .040 AL. ALLOY EXTRUSION - 24S ALCOA DIE #K6240 SPEC. 46A9 COND T FINISH SP-2AL GP

-3 .040 AL. ALLOY SH'T. 24S SPEC. 47A10 COND T. FINISH S-P-2AL.

(D) -4 LAMINATED PHENOLIC MATERIAL SPEC: 17P5 GR-PBG

-5 LAMINATED PHENOLIC MATERIAL SPEC. 17P5 GR-PBG

-6 .040 AL. ALLOY SHT. 24 ST. SPEC. 47A10 COND T

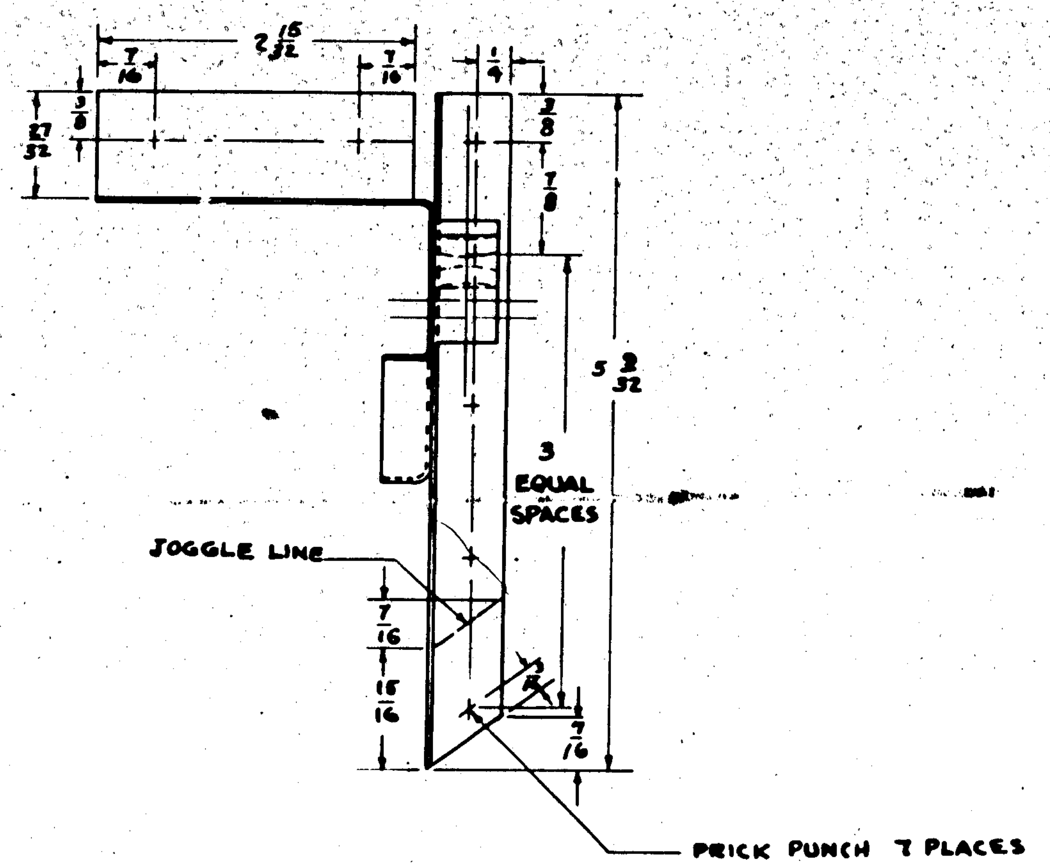

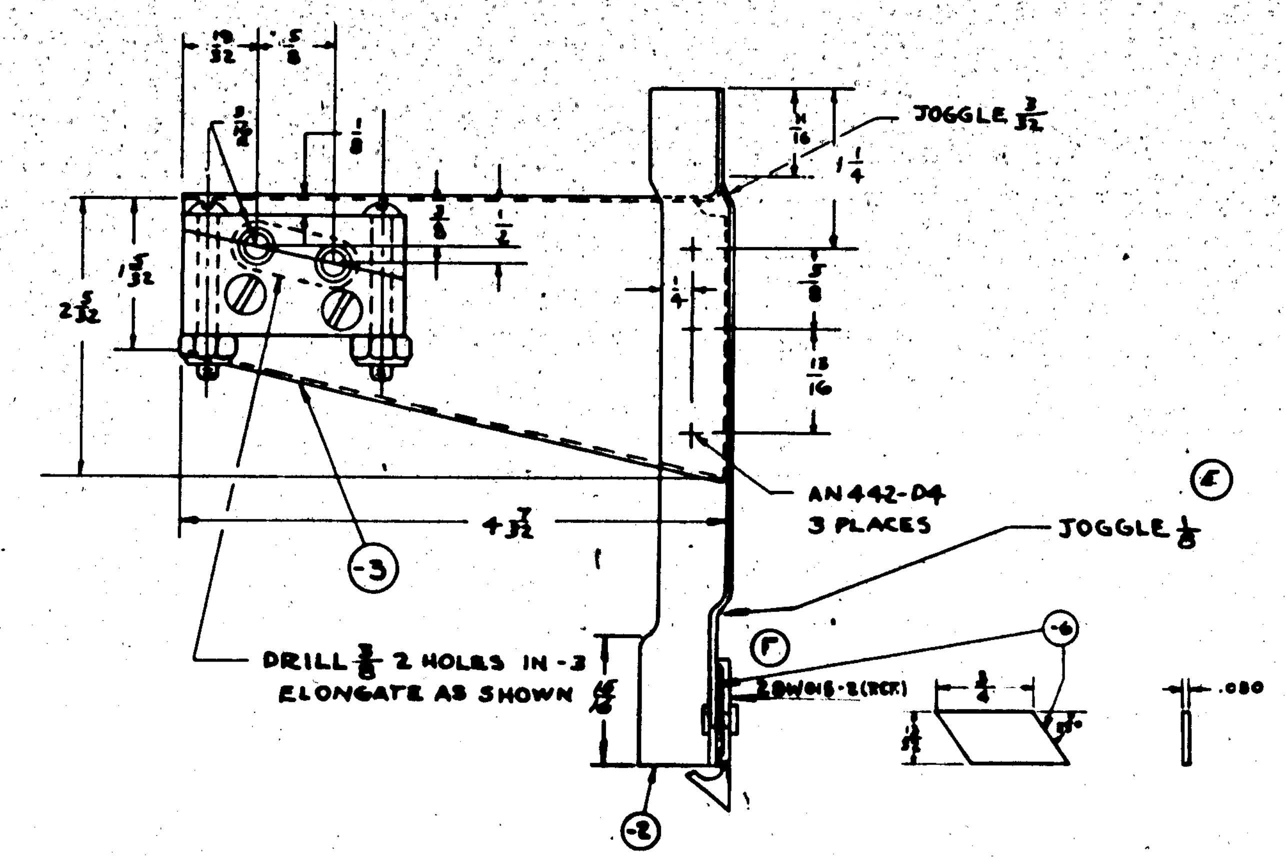

GP - GREEN PRIME

NOTE:
ALL BEND RADII 1/16

O.N.	MODEL	NEXT ASSY.	REQ.	STD PARTS	REQ.	PART NO.	REQ.
	PBY-5B	28W004	1				
	PBY-5A	28W004	1			-6	1
	PBY-5	28W004		AN442-D4	3	-5	1
	PBY-4	28W004		AC365-832	4	-4	1
	PBY-3	28W004		AN515-8-20	2	-3	1
	PBY-2	28W004		AN515-8-14	2	28C2039-2	1
REQUIREMENTS PER AIRPLANE				MAT.		PARTS LIST PER ASSY.	

REPLACES | APPROVED 2-8-37 DATE
REPLACED BY | .23 SHA. CALC. WT. | ACT. WT.
LIMIT ON DIMENSIONS UNLESS ± 1/32 | SCALE 12" = 1'-0"

[redacted]

A C			
NAVY NOTED	NOTED	NONE	NOTED
MATERIAL	SPEC.	HEAT TREAT	FINISH

CONSOLIDATED AIRCRAFT CORP. SAN DIEGO, CALIF.

NAME SUPPORT-AILERON TAB CONT. CABLE FAIRLEAD

DWG. G 28C2039

PBY-5 E.O.471

SUPPLIES & EQUIPMENT CLASSIFICATION			
LET	ALTERATION	DATE	BY
J	TRACED	2/10/36	[illegible]
K	Q507A-2-3 1 REQ'D WAS Q506A-2-4	7-12-38	[illegible]
L	ON FACE OF DWG [illegible] DIM. WAS [illegible]	2-6-41	[illegible]

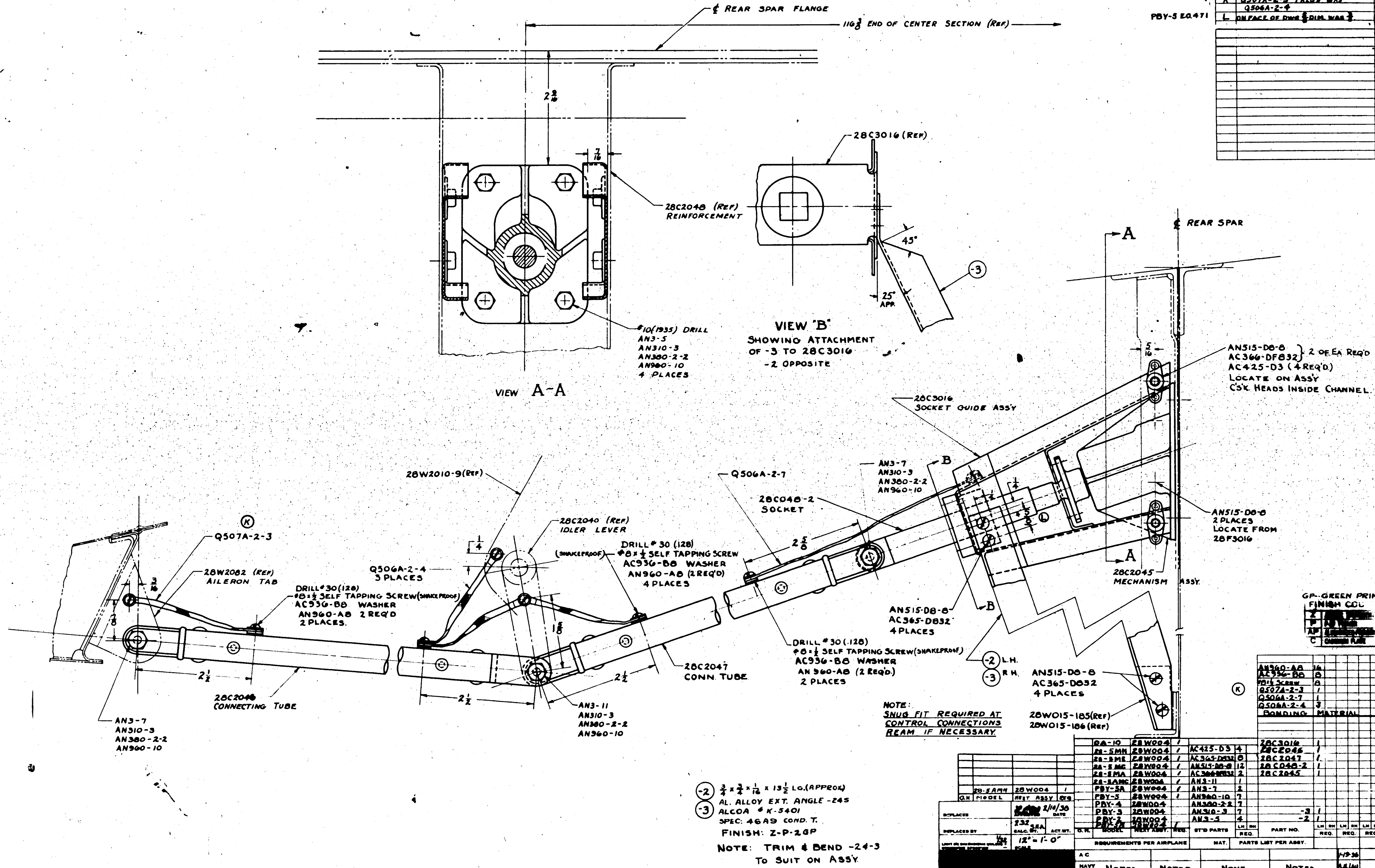

(-2) (-3) ¾ x ¾ x 1/16 x 13½ LG. (APPROX)
AL. ALLOY EXT. ANGLE -24S
ALCOA # K-5401
SPEC: 46A9 COND. T.
FINISH: Z-P-2GP

NOTE: TRIM & BEND -24-3 TO SUIT ON ASS'Y.

GP - GREEN PRIME

FINISH CODE	
Z	[illegible]
P	[illegible]
AP	[illegible]
C	[illegible]

(K)

AN960-A8	16
AC936-B8	8
#8-½ SCREW	8
Q507A-2-3	1
Q506A-2-7	1
Q506A-2-4	3
BONDING	MATERIAL

G.H.	MODEL	NEXT ASSY.	REQ.	STD PARTS	REQ.	PART NO.	REQ.
	28-5AMN	28W004	1				
	PA-10	28W004	1			28C3016	1
	28-5MN	28W004	1	AC425-D3	4	28C2046	1
	28-5ME	28W004	1	AC365-D832	8	28C2047	1
	28-5MC	28W004	1	AN515-D8-8	12	28C048-2	1
	28-5MA	28W004	1	AC366-DF832	2	28C2045	1
	28-5AMC	28W004	1	AN3-11	1		
	PBY-5A	28W004	1	AN3-7	2		
	PBY-5	28W004	1	AN960-10	7		
	PBY-4	28W004		AN380-2-2	7		
	PBY-3	28W004		AN310-3	7	-3	1
	PBY-2	28W004		AN3-5	4	-2	1
	PBY-5A	28W004	1				

REQUIREMENTS PER AIRPLANE — MAT. — PARTS LIST PER ASSY.

REPLACES	[illegible] 2/10/36	DATE
REPLACED BY	232 SHA CALC. WT.	ACT. WT.
LIMIT ON DIMENSIONS UNLESS OTHERWISE SPECIFIED ± 1/32	12" = 1'-0"	SCALE

AC				1-19-36		Cn
NAVY	NOTED	NOTED	NONE	NOTED	A.R.LAU	MILLER
	MATERIAL	SPEC.	HEAT TREAT	FINISH	DRAFT	CHECK	EXAM.

CONSOLIDATED AIRCRAFT CORP.
SAN DIEGO, CALIF.

NAME INSTALLATION-AILERON TAB CONTROLS IN WING

OPP. HAND

DWG. G 28C205

SUPPLIES & EQUIPMENT CLASSIFICATION			
LET	ALTERATION	DATE	BY
E	TRACED	2-1-38	Comm'd
F	PBY-4 SERIES NOTE ADDED		
	VIEW B-B ADDED FOR -24-5		
	DIMS. -24-5 ADDED & R.M.	4/6/38	Wood
G	ADDED SECTION C-C	6/16/38	Rec'd
H	ADDED PBY-5A DATA	8/9/38	Wood
J	ADDED LUGS AS SHOWN	10/10/38	Wood
	.850±.005 WAS .335±.005		
	[illegible] WAS [illegible] ERR		
K	ADDED SECT. D-D & CHANGE DESIGNATION		
	E.NOTE: "24 PLACES" ... "4 PLACES"		
	"3/8 DIA. DRILL THRU" WAS "1/2 DIA."		
	THRU (OMISSION)	6-18-40	Comm'd

E.O. 24721

E.O. A35322

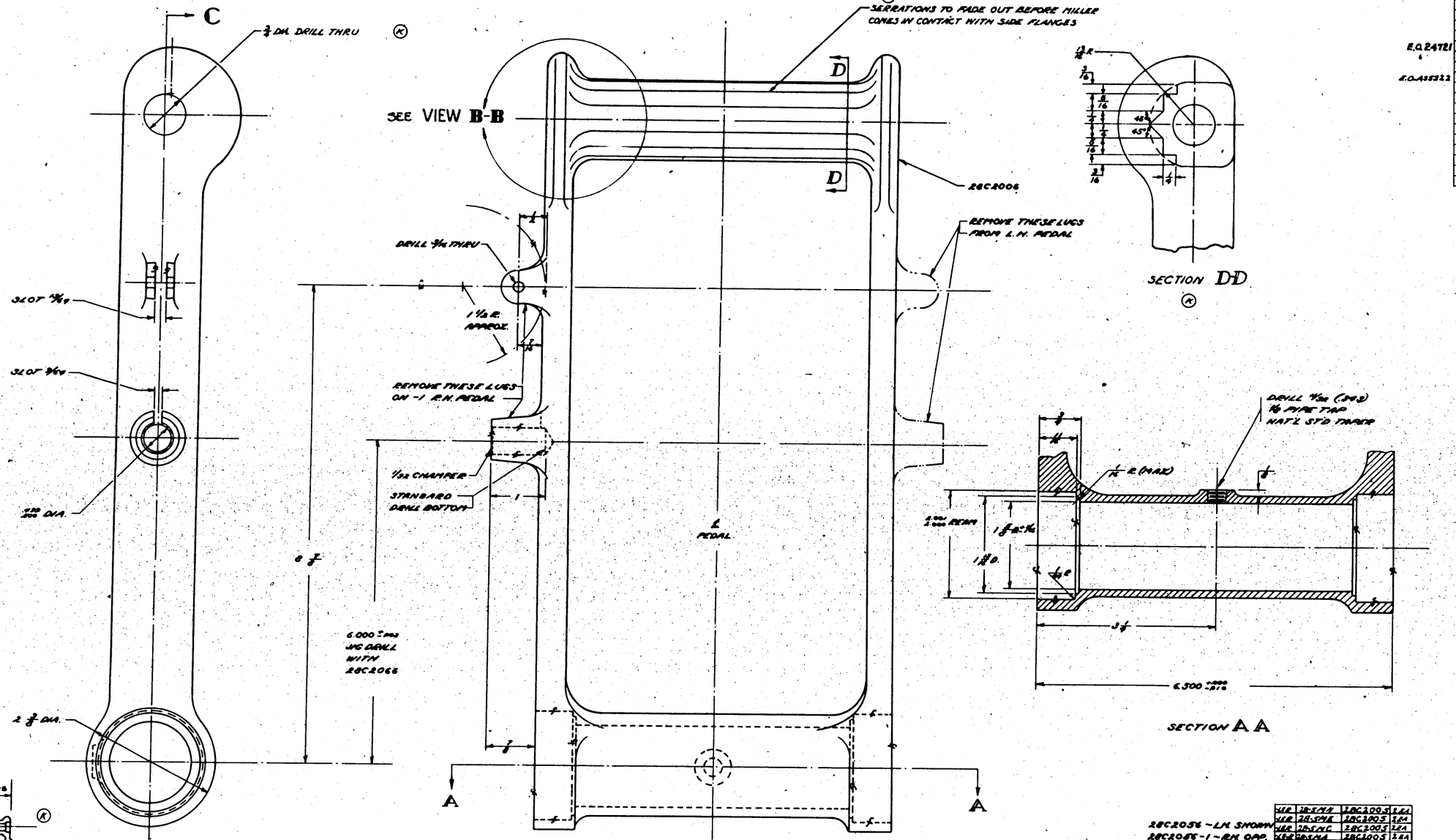

GP-GREEN PRIME FINISH CC.

Z	[illegible]
F	[illegible]
AP	[illegible]
C	CADMIUM PLATE

28C2056 -LH. SHOWN
28C2056-1 -RH. OPP.

ALR	28-5114	28C1005	2A1	
ALR	28-5115	28C1005	2A1	
ALR	28-5116	28C1005	2A1	
XLER	28-5114	28C1005	2A1	
-	PBY-5	28C2005	2	
	PBY-5A	28C2005	2	
2A3	28-5 AMC	28C3105	6A1	
2A3	28-5 AMH	28C3105	2A1	
-3	PBY-5A	28C5708	2	
-2	PBY-5A	28C5705	2	
-3	28B2-2A	28C4006	2	
-2	28B2-2A	28C4005	2	
-1	PBY-4	28C3005	2	
	PBY-4	28C2005	2	
-1	PBY-4	28C2005	2	
	PBY-4	28C2005	2	
-1	PBY-4	28C2005	2	
	PBY-4	28C2005	2	

O.N.	MODEL	NEXT ASSY.	REQ.	ST'D PARTS	LH	RH	PART NO.	LH	RH	LH	RH	LH	RH	LH	RH	LH	RH
					REQ.			REQ.		REQ.		REQ.		REQ.		REQ.	
REQUIREMENTS PER AIRPLANE				MAT.	PARTS LIST PER ASSY.		28C2005	1	1								

A C								
NAVY				2-P-2[illegible]GP				
MATERIAL	SPEC.	HEAT TREAT	FINISH		DRAFT	CHECK	ENGR.	ENG.

REPLACES 28C2056 APPROVED 2-9-38 DATE

REPLACED BY

2.9 LBS. GALS. WT. AST. WT.

.015 LIMIT ON DIMENSIONS UNLESS A DIFFERENT TOLERANCE IS GIVEN

AS 1"=1'0" SCALE

CONSOLIDATED AIRCRAFT CORP. SAN DIEGO, CALIF.

NAME PEDAL CONTROLS RUDDER

OPP. HAND 28C2056-1

SIZE G

DWG. NO. 28C2056

—NOTE—
1. WHEN USING PBY-4 OVERSTOCK TO MAKE -28-5, REWORK AS PER C.O. 6077.

SUPPLIES & EQUIPMENT CLASSIFICATION			
LET	ALTERATION	DATE	BY
F	TRACED	2-9-38	[illegible]
G	REMOVED REQUIREMENTS OF -0, -1, -2, & -3 ASSY. FOR PBY-5A, OA-10, & 28-5AMC	9-4-41	[illegible]
H	IN B/M & ON FACE, AC501-416-8 WAS AC501-416-10 (NO WT. CHANGE)	4-13-45	[illegible]

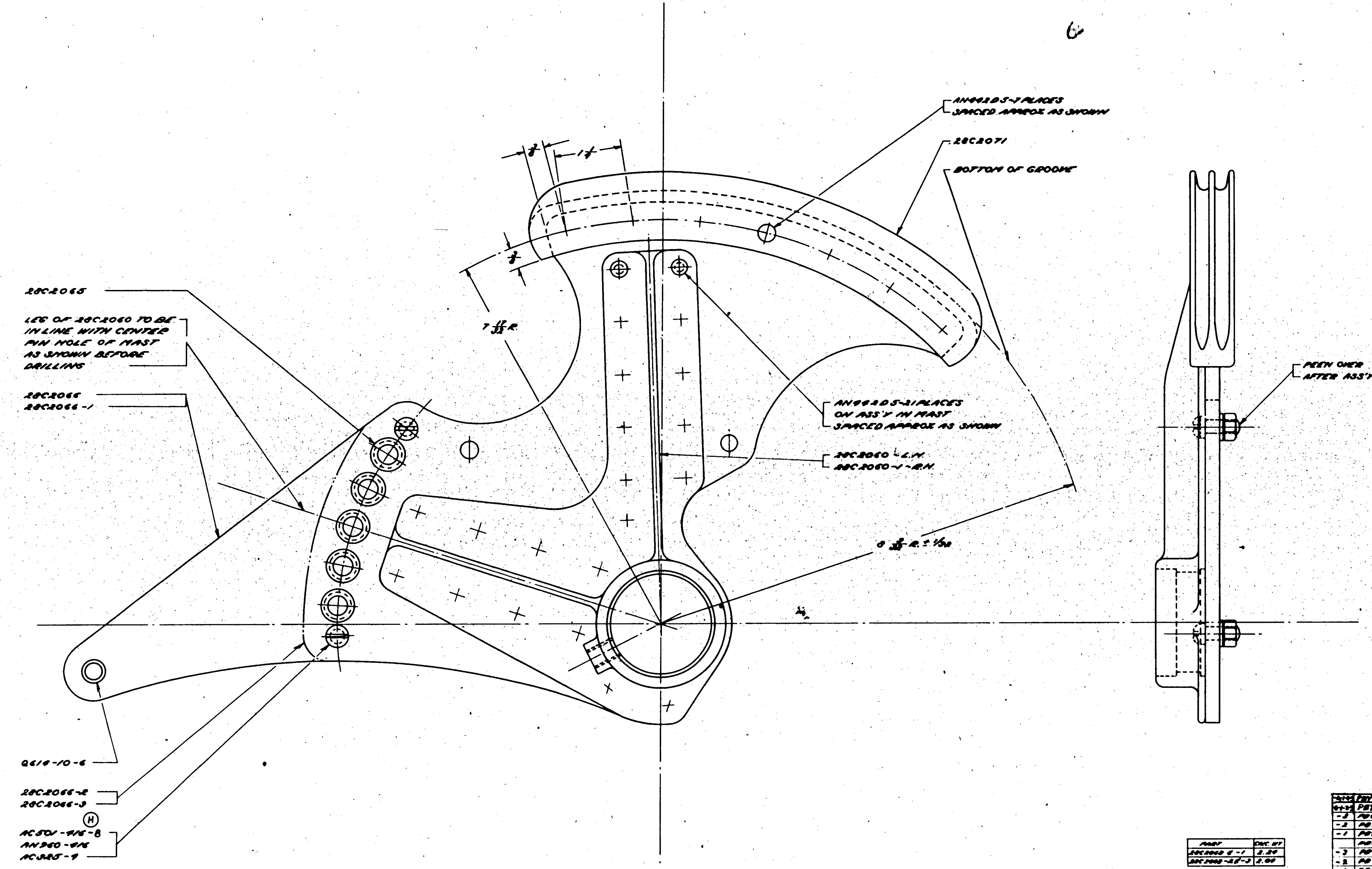

28C2068 ~ L.H SHOWN
28C2068-1 ~ R.H. OPP.
28C2068-2 ~ L.H.
28C2068-3 ~ R.H.

FINISH:
TOUCH UP AL. AFTER ASS'Y

PART	CALC. WT.
28C2068 & -1	2.29
28C2068-2 & -3	2.09

O.H.	MODEL	NEXT ASSY.	REQ.	ST'D PARTS	LH REQ.	RH REQ.	PART NO.	LH	RH	LH	RH	LH	RH	LH	RH	LH	RH
-0+3	PBY-5A	28C5705	1 EA.														
0+3	PBY-5B	28C2005	1 EA.														
-3	PBY-4	28C2005	1														
-2	PBY-4	28C2005	1														
-1	PBY-4	28C2005	1				Q614-10-6	1	1								
	PBY-4	28C2005	1														
-3	PBY-3	28C2005	1				28C2071	1	1	1	1						
-2	PBY-3	28C2005	1				28C2066-3				1						
-1	PBY-3	28C2005	1				28C2066-2			1							
	PBY-3	28C2005	1				28C2066-1		1								
-3	PBY-2	28C2005	1	AN960-416	4	4	28C2066	1									
-2	PBY-2	28C2005	1	AC501-416-8	4	4	28C2065	8	8	8	8						
-1	PBY-2	28C2005	1	AN442D5			28C2060-1	1	1		1						
	PBY-2	28C2005	1	AC325-4	4	4	28C2060	1		1							
REQUIREMENTS PER AIRPLANE				MAT.			PARTS LIST PER ASSY.	-1		-2	-3						

REPLACES		R. [illegible] 2-9-38 APPROVED	DATE				
REPLACED BY		NOTED CALC. WT.	ACT. WT.				
LIMIT ON DIMENSIONS UNLESS OTHERWISE SPECIFIED ± 1/64		12"=1'0" SCALE					
A C					11-2-36		11-10-36
NAVY			NOTED		[illegible]		[illegible]	R.
MATERIAL	SPEC.	HEAT TREAT	FINISH		DRAFT	CHECK	EXAM.	ENG.

CONSOLIDATED AIRCRAFT CORP.
SAN DIEGO, CALIF.
STAMP PT. NO. WHERE SHOWN

NAME MAST ASSY CONTROLS RUDDER PEDAL

OPP. HAND NOTED

DWG. SIZE G 28C2068

PRINTED ON "IMPERIAL" TRACING CLOTH

	SUPPLIES & EQUIPMENT CLASSIFICATION		
LET	ALTERATION	DATE	BY
	TRACED	[illegible]	[illegible]
C	[illegible]	[illegible]	[illegible]
E	AN520-DB-16 WAS [illegible]	[illegible]	[illegible]
F	ON DWG REMOVED NOTE "VIZ" LOCATE		
	& RIVET-6 UPON ASSY. ETC.-RETAINED		
	AN442-D4 4 PLACES	11-2-41	[illegible]
"G"	REMOVED REQUIREMENTS		
	FOR PBY-5A, 28-1B & 28-5AMC	9-16-41	[illegible]
H	.051 AL. AL. 24ST WAS .051 AL. AL.		
	2450 FOR-2&4. NO. WT. CHG.	1-2-42	[illegible]
J	AN520-DB-14(4) WAS AN520		
	-DB-16(4). NEG. WT. CHG.	1-2-42	[illegible]
K	DIM. 3/4 WAS 5/8. ADDED NOTE		
	NO. 30---10 HOLES. NO WT. CHG.	8-13-42	[illegible]
L	REMOVED DIMS 3/4 & 3/16 (2 PLACES EA)		
	& 3 EQ. SPACES. ADDED DIMS 7 3/16, 7/16		
	5/8 (3 PLACES) & 13/16 (2 PLACES)		
	NO WT. CHG.	8-21-42	[illegible]
M	AN526-D-832-14 WAS AN520-DB-16		
	NO WT. CHG.	12-6-42	[illegible]
N	ON FACE FOR -7 REPLACED NOTE "MAKE		
	-7 FROM 5/16 X 7/8 X 1/16 AL. ALLOY EXT. 24S		
	ALCOA DIE #K8878, SPEC 46A9 COND. T.		
	7 5/16 LONG" WITH "-7 MAT'L TO BE Y-6-A6T		
	X 7 5/16" WT. CHG. NEG.	4-16-43	[illegible]

E.O. 25316
E.O. 18225
E.O. A43731
E.O. A45578

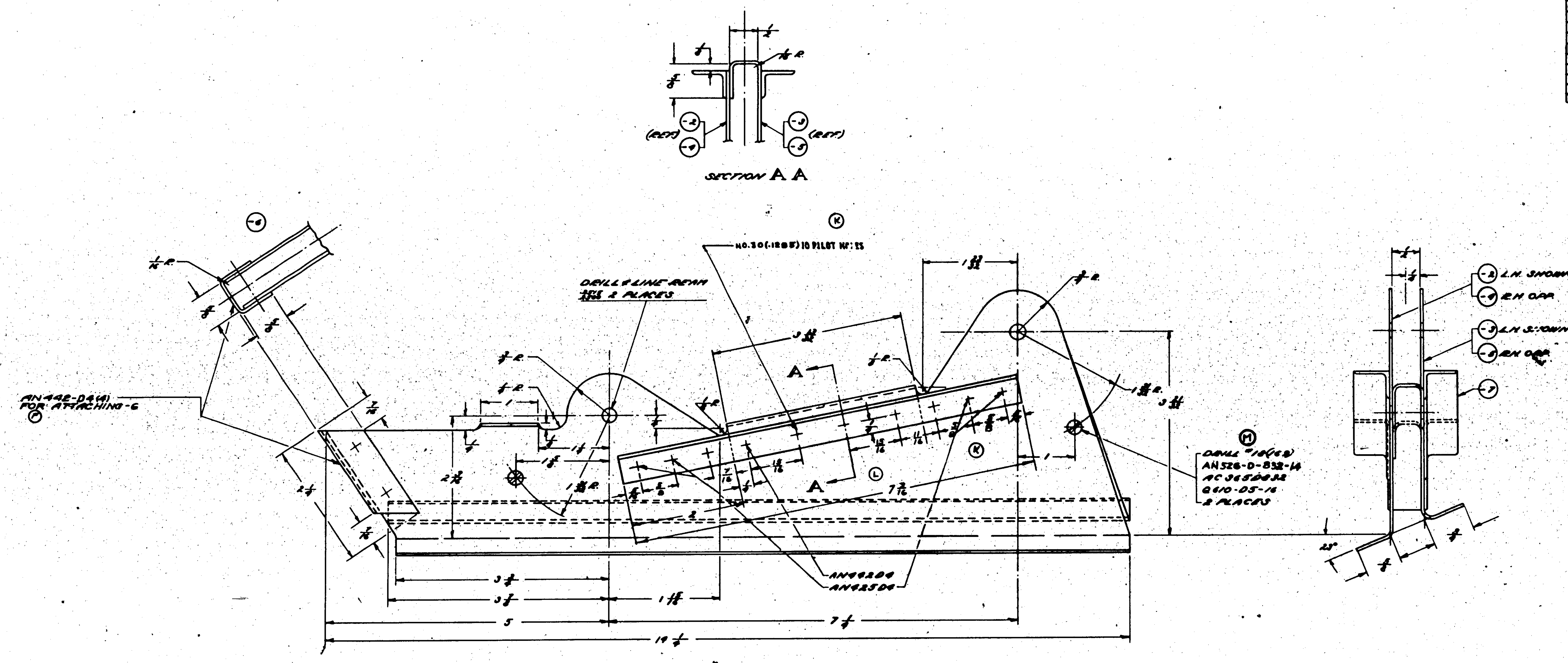

FINISH CODE	
Z	ANODIC TREATMENT
P	P-27 PRIMER
AP	ALUMINIZED PRIMER
C	CADMIUM PLATE,

G.P. - GREEN PRIME

NOTE:
MAKE -3, -5 & -6 FROM .051 AL. ALLOY
SH'T 24ST SPEC 47A10 COND T -
-7 MATERIAL TO BE Y-6-A6T X 7 5/16. (N)

(N) (C) MAKE -2 FROM .051 AL. AL. SHEET 24ST COND 'T' 47A10
MAKE -4 FROM .051 AL. AL. SHT. 24ST SPEC
47A10 COND 'T'.

O. H.	MODEL	NEXT ASSY.	REQ.
-R	PBY-5B	28CA[illegible]	1
-L	PBY-5B	28CE[illegible]	1
-R	28-5MN	28C2000	1
-L	28-5MN	28C2000	1
-R	PBY-5	28C2000	1
-L	PBY-5	28C2000	1
-R	28-5ME	28C2000	1
-L	28-5ME	28C2000	1
-R	28-5MC	28C2000	1
-L	28-5MC	28C2000	1
-R	28-5MA	28C2000	1
-L	28-5MA	28C2000	1

REQUIREMENTS PER AIRPLANE

ST'D PARTS	LH REQ.	RH REQ.
AN526-D-832-14	2	2
AN442D4	16	16
AN425D4	8	8
AC365D832	2	2

MAT.

PART NO.	LH REQ.	RH REQ.
Q610-D5-14	2	2
28C2070-7	2	2
-6	1	1
-5		1
-4		1
-3	1	
28C2070-2	1	

PARTS LIST PER ASSY.

REPLACES	[illegible] APPROVED	2-9-38 DATE
REPLACED BY	.60 LBS. CALC. WT.	ACT. WT.
LIMIT ON DIMENSIONS UNLESS OTHERWISE SPECIFIED [redacted]	12" = 1'-0" SCALE	

A C				
NAVY	NOTED	NOTED	NONE	Z-P-2GP
	MATERIAL	SPEC.	HEAT TREAT	FINISH

DRAFT: [illegible] CHECK: [illegible] ENGR.: [illegible]

CONSOLIDATED AIRCRAFT CORP. SAN DIEGO, CALIF.

NAME: BRCK'T.-CONT'S.-RUDDER PEDAL IDLER PULLEY

OPP. HAND

DWG. SIZE G 28C207[illegible]

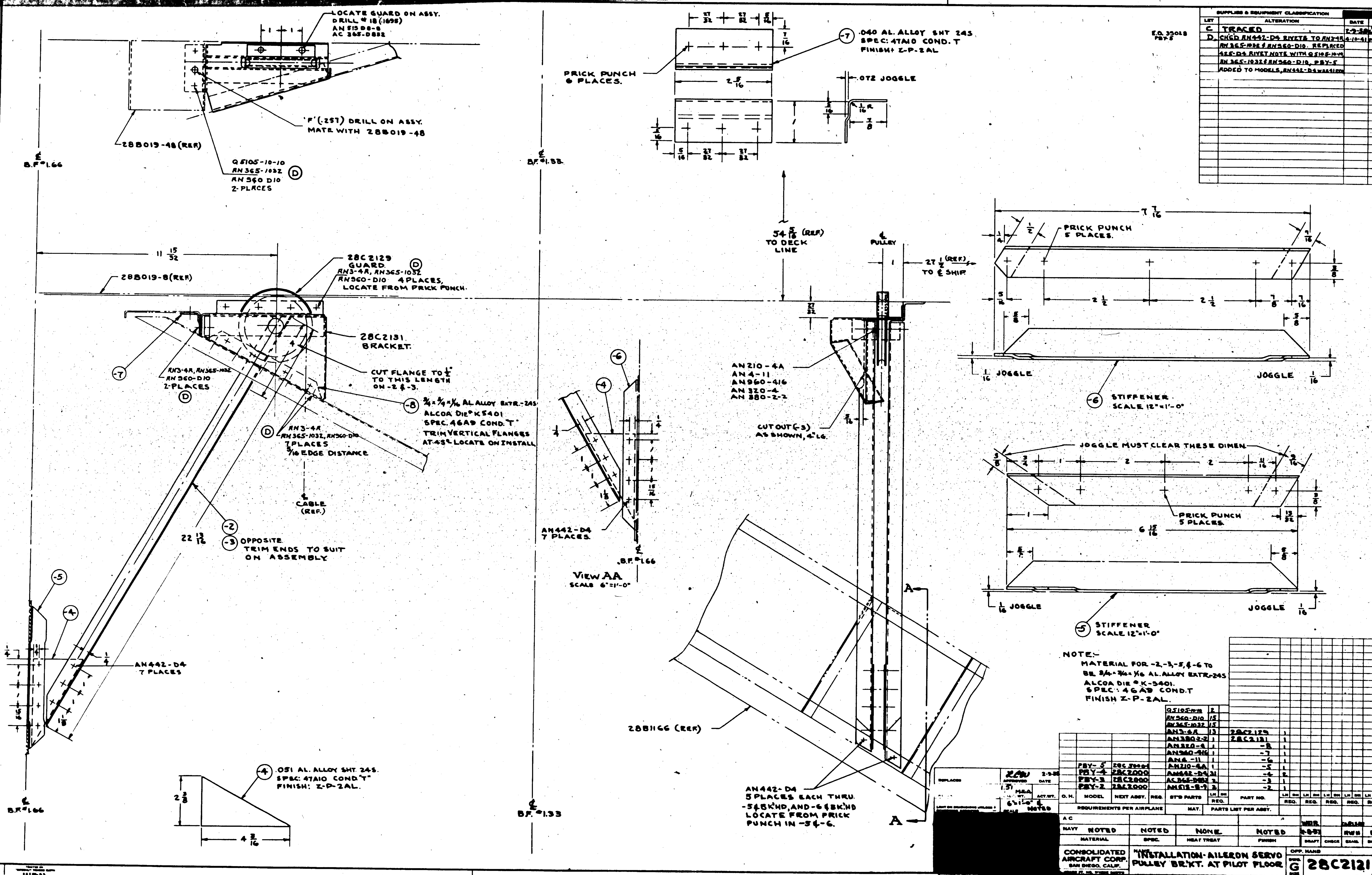

LET	ALTERATION	DATE	BY
C	TRACED	2-9-38	
D	CH'G'D AN442-D4 RIVETS TO AN3-4R AN365-1032 & AN960-D10. REPLACED 425-D4 RIVET NOTE WITH Q5105-10-10 AN365-1032 & AN960-D10, PBY-5 ADDED TO MODELS, AN442-D4 WAS 41 REQ.	4-10-41	

NOTE:-
MATERIAL FOR -2, -3, -5, & -6 TO BE 3/4 x 3/4 x 1/16 AL. ALLOY EXTR.-24S ALCOA DIE # K-5401. SPEC: 46A9 COND. T FINISH Z-P-2AL.

MODEL	NEXT ASSY.	ST'D PARTS	REQ.	PART NO.	REQ.
		Q5105-10-10	2		
		AN960-D10	15		
		AN365-1032	15		
		AN3-4R	13	28C2129	1
		AN380-2-2	1	28C2131	1
		AN320-4	1	-8	1
		AN960-416	1	-7	1
		AN4-11	1	-6	1
PBY-5	28C5000-1	AN210-4A	1	-5	1
PBY-4	28C2000	AN442-D4	31	-4	2
PBY-3	28C2000	AC365-D832	2	-3	1
PBY-2	28C2000	AN515-8-8	2	-2	1

REQUIREMENTS PER AIRPLANE — MAT. — PARTS LIST PER ASSY.

MATERIAL	SPEC.	HEAT TREAT	FINISH
NAVY NOTED	NOTED	NONE	NOTED

APPROVED 2-9-38 — SCALE 6"=1'-0" & NOTED

[redacted]

CONSOLIDATED AIRCRAFT CORP. SAN DIEGO, CALIF.

INSTALLATION-AILERON SERVO PULLEY BR'KT. AT PILOT FLOOR

G 28C2121

RETRACED Shirley Heward

SUPPLIES & EQUIPMENT CLASSIFICATION

LET	ALTERATION	DATE	BY
G	TRACED	2-10-38	

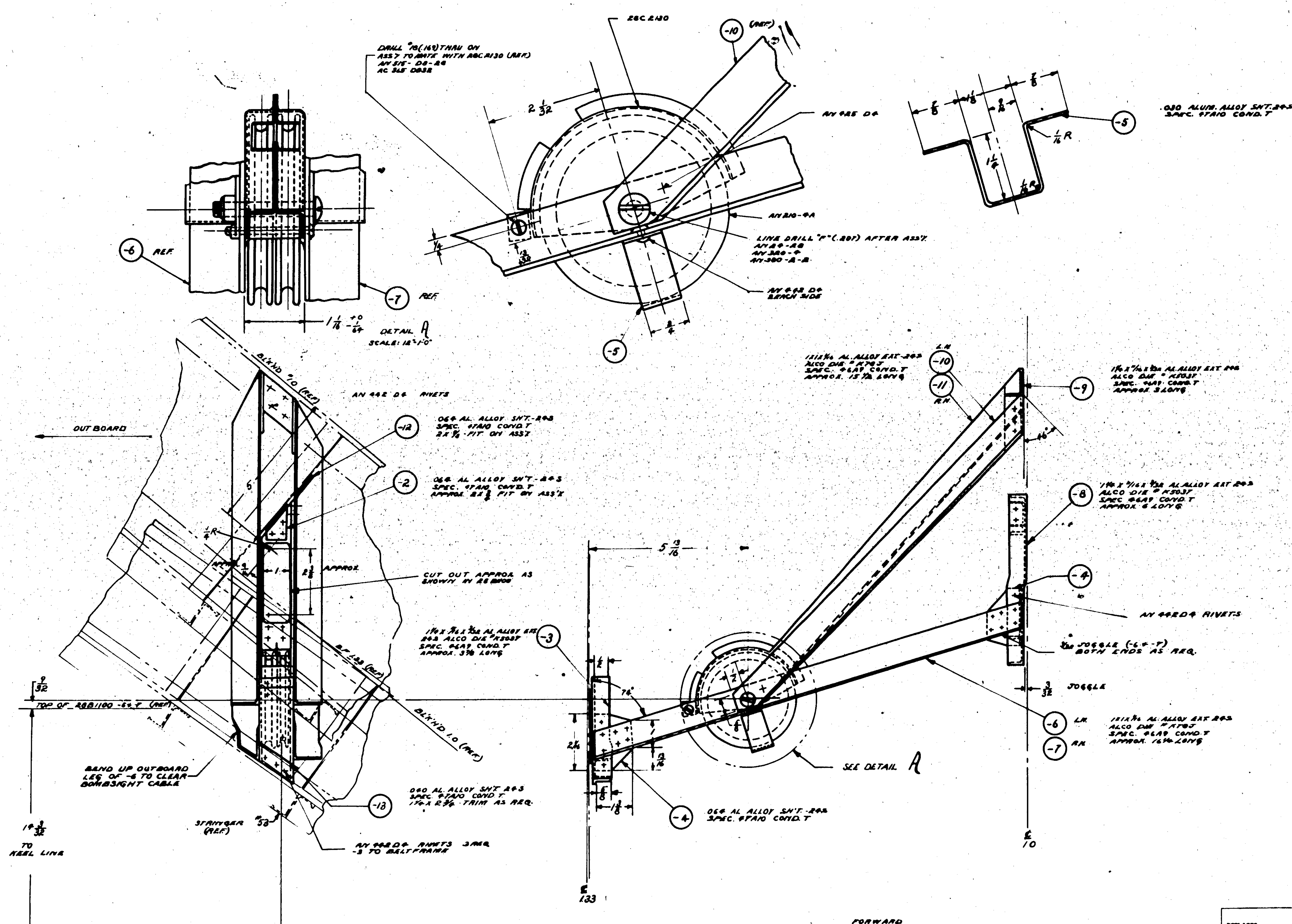

NOTES

1. ALL RIVETS AN442D4 EXCEPT AS NOTED
2. MAINTAIN 5/16 EDGE DISTANCE FOR RIVETS THRU OUT.
3. TRIM ALL OUTSTANDING ANGLES 45° APPROX.
4. FINISH: ALL PARTS Z-P-2AL BEFORE ASS'Y. & TOUCH UP AFTER ASS'Y.

O.H.	MODEL	NEXT ASSY.	REQ
-13	PBY-4	28C3126	
-5	PBY-4	28C3126	
-3	PBY-4	28C3126	
-13	PBY-3	28C3126	
-6	PBY-3	28C3126	
-3	PBY-3	28C3126	
	PBY-2	28C2900	

ST'D PARTS	REQ. LH	RH
AN515D8-28	1	
AN380-2-2	1	
AC365D832	1	
AN380-4	1	
AN210-4A	2	
AN24-28	1	
AN442D4		
AN425D4		

PART NO.	REQ. (PBY-2)	REQ. (PBY-3)	REQ. (PBY-4)	REQ.	REQ.
28C2130	1	–	–		
28C2126-13	1	1	1		
-12	1	–	–		
-11	1	–	–		
-10	1	–	–		
-9	1	–	–		
-8	1	–	–		
-7	1	–	–		
-6	1	–	–		
-5	1	1	1		
-4	4	–	–		
-3	1	1	1		
-2	1	–	–		

REQUIREMENTS PER AIRPLANE | MAT. | PARTS LIST PER ASSY. | PBY-2 | PBY-3 | PBY-4

REPLACES

APPROVED: LCW — DATE: 5-16-38

REPLACED BY

CALC. WT.: 166 | ACT. WT.

LIMIT ON DIMENSIONS UNLESS OTHERWISE SPECIFIED: FRACT. ± 1/64" — ANGLES ± 1/2°

SCALE: 6"=1'-0" — SCALE AS NOTED

[redacted]

A C					DRAFT	CHECK	EXAM.
NAVY	AS NOTED	AS NOTED	NONE	AS NOTED	1/2-37		W.H.
	MATERIAL	SPEC.	HEAT TREAT	FINISH			

CONSOLIDATED AIRCRAFT CORP.
SAN DIEGO, CALIF.

NAME: BRACKET-S.B.A.E. CONT. SYSTEM-RUDDER-CONT-PULLEY

OPP. HAND

DWG SIZE: G — 28C2126

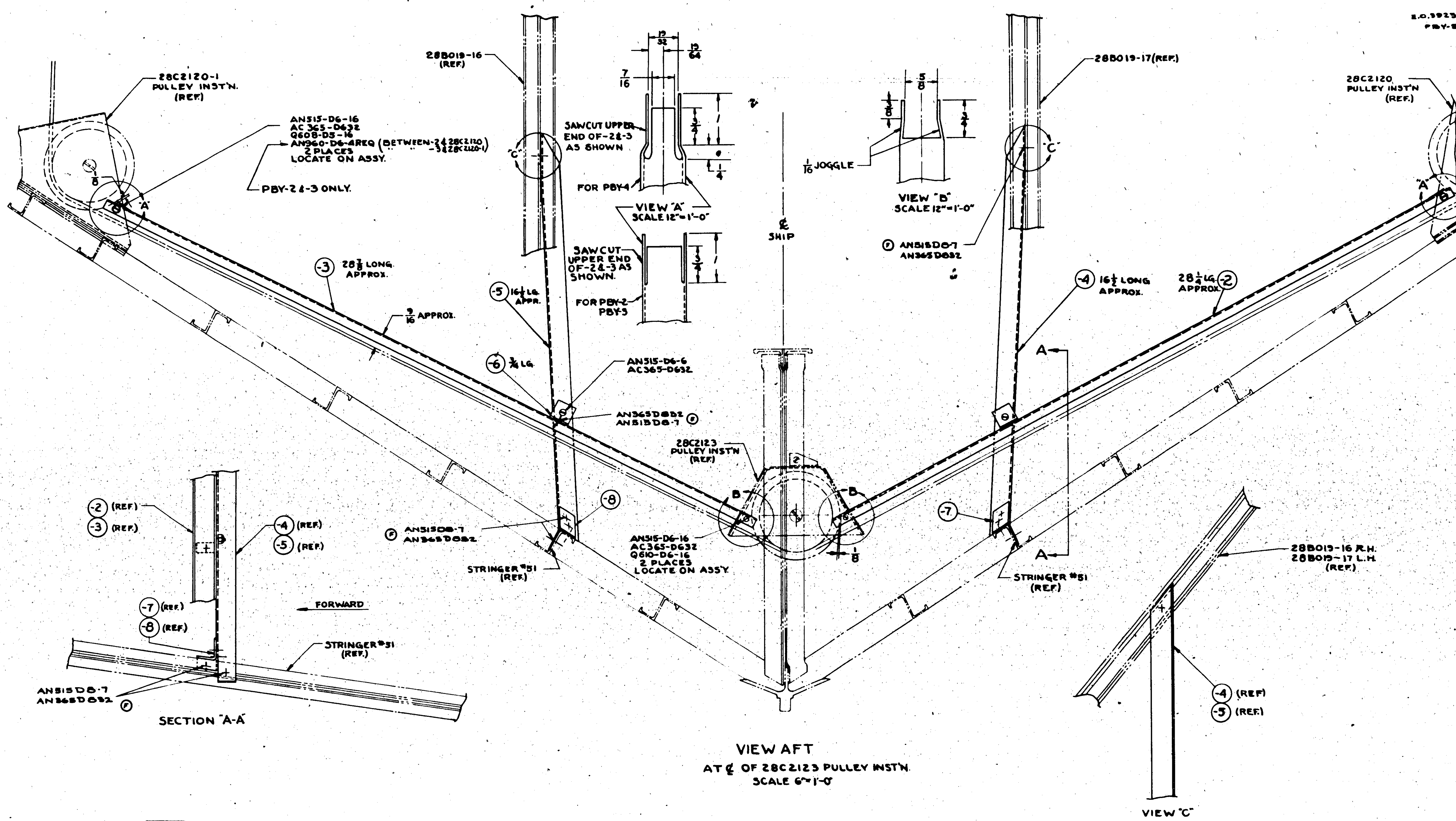

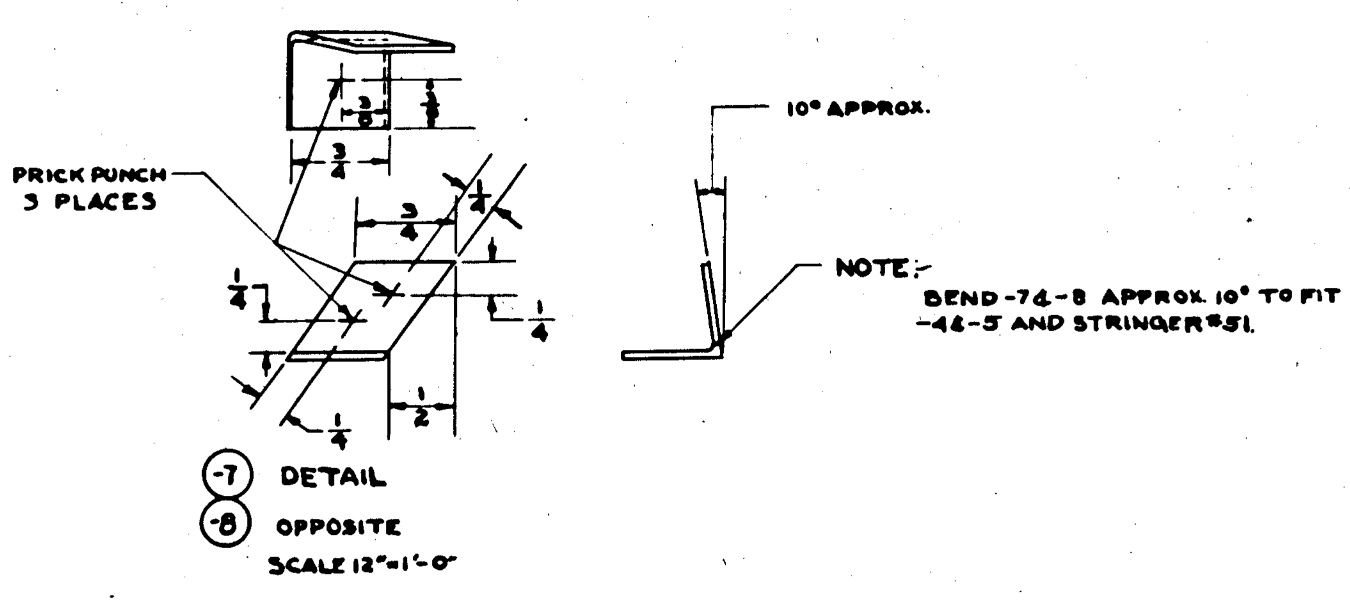

NOTE:-
-2 AND -3 TO BE MADE FROM 7/8 x 3/8 x 1/16 EXTR. CHANNEL
DIE #K1297
ALUM. ALLOY 24S
SPEC. 46A9 COND. T

-4 TO -8 INC. TO BE MADE FROM 3/4 x 3/4 x 1/16 EXTR. ANGLE
DIE #K5401
ALUM. ALLOY 24S
SPEC. 46A9 COND. T

SUPPLIES & EQUIPMENT CLASSIFICATION

LET	ALTERATION	DATE	BY
E	TRACED		
F	-7 & -8 ATTACHED TO #51 WITH AN515D8-7 (1) & AN365D832 (1). -4 & -5 ATTACHED TO #51 WITH AN515D8-7 & AN365D832 (1). AN515D8-7 (1), AN365D832 (2) REQ. AN515D8-7 (1) REPLACES AN442-D4, AND AN365D832. AN365D832 (8), & AN515D8-7 (8) ADDED TO B/M.	2-10-38 4-10-41	Weir Slama

							Ⓕ AN515D8-7	8	
							AN365D832	8	
							28C2167-8	1	
							Q608-D5-16	4	
							-7	1	
				AN442-D4	12	12	-6	2	
	PBY-5	28C5000		AN515-D6-6	2	2	-5	1	
	PBY-4	28C2000		AC365-D632	6	6	-4	1	
	PBY-3	28C2000		AN960-D6	4	–	-3	1	
	PBY-2	28C2000		AN515-D6-16	4	4	-2	1	
O. H.	MODEL	NEXT ASSY.	REQ.	ST'D PARTS	LH (PBY-2 & -3)	RH (PBY-4)	PART NO.	REQ.	
REQUIREMENTS PER AIRPLANE				MAT.	PARTS LIST PER ASSY.				

REPLACES		[signature] 8-10-38 APPROVED	DATE
REPLACED BY		.93 CALC. WT. J.B.J.	ACT. WT.
1/32 LIMIT ON DIMENSIONS UNLESS OTHERWISE SPECIFIED		6"=1'-0" & SCALE 12"=1'-0"	

A C				6-29-37		Ch
NAVY NOTED	NOTED	NONE	Z-P-2AL	[signature]		[signature]
MATERIAL	SPEC.	HEAT TREAT	FINISH	DRAFT	CHECK	EXAM.

CONSOLIDATED AIRCRAFT CORP.
SAN DIEGO, CALIF.

NAME GUARD-INST'N-CONTROLS 3.B.A.E. AILERON CONTROL CABLE

OPP. HAND

DWG. G 28C2167

LET	ALTERATION	DATE	BY
B	TRACED	7-12-38	
C	REPLACED -6 WITH -7		DAH
D	RIVETS REMOVED & REPLACED WITH BOLTS: AN442-D4 BY AN3-4A, AN365-1032, AN960-AL10 & AN442-D4 BY AN3-5A, AN365-1032, AN960-AL10	4-10-41	CARR
E	REMOVED PBY-5A & OA-10 FROM -57 ASS'Y. -57 ASSEM. RE-PLACES -0 ASSEM. FOR PBY-5	1/17/4	
F	CHG'D (-2) K78J-24SO WAS K78J-24ST.	12-26-41	
G	CHG'D (-7) .091 AL. ALLOY WAS .064 AL. ALLOY.	10-25-41	
H	ADDED DETAIL "B" & HT. NOTE FOR -2, -3	12-26-41	
J	AN3-5A, AC365-1032, AN960-AL10 1 PLACE (WAS 2 PLACES) (WT. CHG. NEG)	6-2-42	

E.O. 26434
E.O. A1990 PBY-5/PBY-5A OA-10
ERA34030

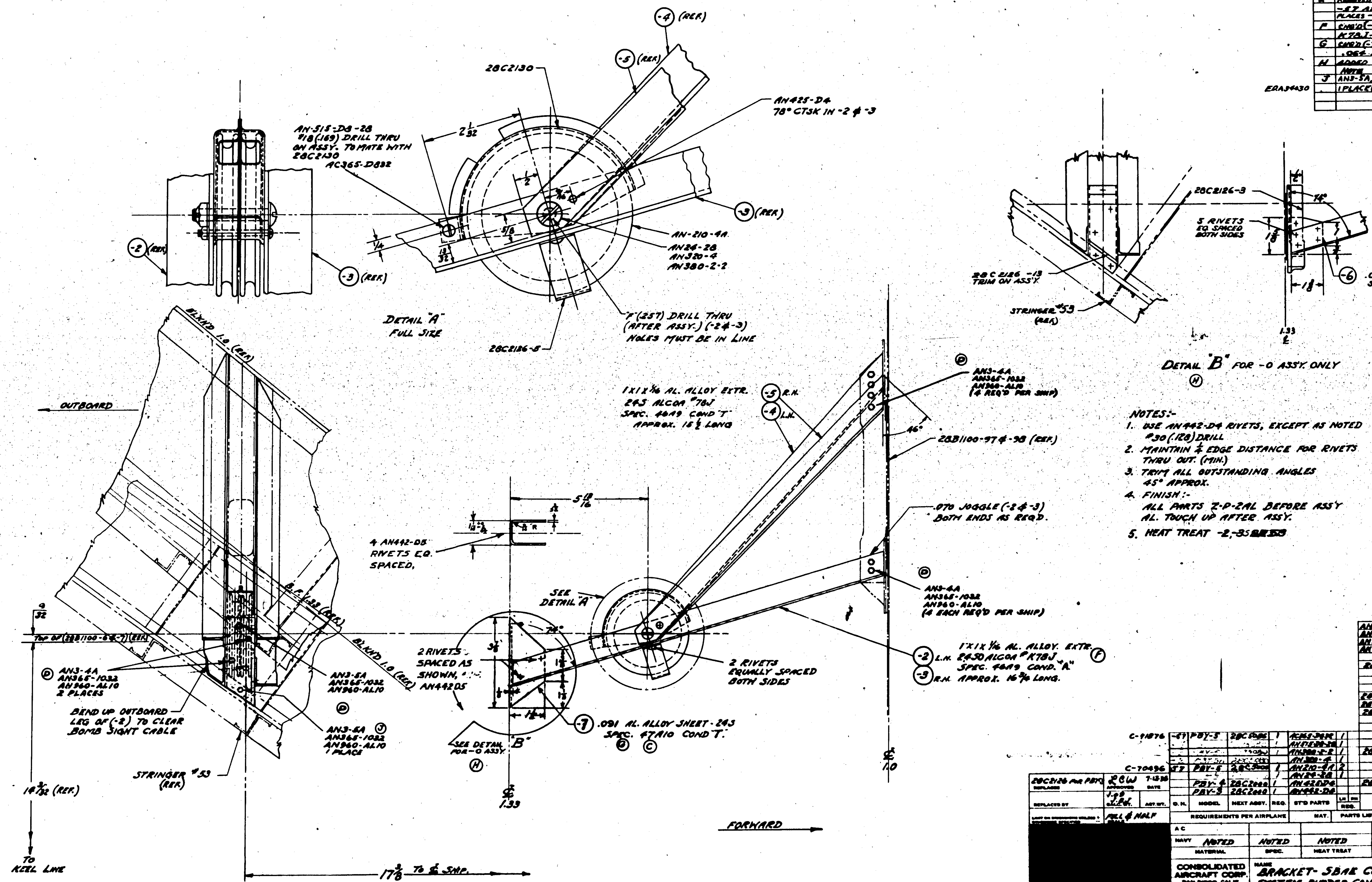

NOTES:-
1. USE AN442-D4 RIVETS, EXCEPT AS NOTED #30 (.128) DRILL
2. MAINTAIN 1/4 EDGE DISTANCE FOR RIVETS THRU OUT. (MIN.)
3. TRIM ALL OUTSTANDING ANGLES 45° APPROX.
4. FINISH:- ALL PARTS Z-P-2AL BEFORE ASS'Y AL. TOUCH UP AFTER ASSY.
5. HEAT TREAT -2,-3S

PART NO.	REQ.	REQ.
AN3-5A	3	2
AN3-4A	10	10
AN365-1032	13	12
AN960-AL10	13	12
28C2130	1	1
28C2126-13	1	
28C2126-5	1	1
28C2126-3	1	
-7		1
28C3126-6	2	
-5	1	1
-4	1	1
-3	1	1
28C3126-2	1	1

	D.N.	MODEL	NEXT ASSY.	REQ.	ST'D PARTS	REQ.
C-91876	-57	PBY-5	28C5086	1	AC365-D832	1
				1	AN515-D8-28	1
				1	AN380-2-2	1
					AN320-4	1
C-70496	57	PBY-5	28C5086	1	AN210-4A	2
				1	AN24-28	1
		PBY-4	28C2000	1	AN425D4	
		PBY-3	28C2000	1	AN442-D8	

REQUIREMENTS PER AIRPLANE — MAT. — PARTS LIST PER ASSY. -0

28C2126 FOR PBY-3 — REPLACES
RCW — APPROVED — 7-12-38 — DATE
REPLACED BY
CALC. WT. — ACT. WT.
FULL & HALF — SCALE

	MATERIAL	SPEC.	HEAT TREAT	FINISH
NAVY	NOTED	NOTED	NOTED	NOTED

DRAFT — CHECK — EXAM.
OPP. HAND NONE

CONSOLIDATED AIRCRAFT CORP. SAN DIEGO, CALIF.

NAME: BRACKET- SBAE CONTROL SYSTEM-RUDDER CONT.-PULLEY

G 28C3126

LET	ALTERATION	DATE	BY
A	REDRAWN & REVISED	9-20-39	
B	WAS 1 1/4 NOW 2 1/4		
C	WAS AN442D3 (3)		
D	-8 ANGLE RELOCATED ON AFT SIDE OF 8.33 FRAME -8 SPACER ELIMINATED		
E	Y6-A22T WAS Y2-A25T IN B/M FOR -8. ADD REQ. FOR ALL 28 MODELS PBY-5A & OA-10 MODELS UP TO DATE.		
F	REPLACED AN442-D4 (14) WITH AN3-D4A & AN365-D1032 (14) EA (WT. CHG NEG)	3-18-42	
G	REPLACED AN442-D5 (22) WITH AN3-D4A & AN365-D1032 (20) EA (WT. CHG. NEG)	3-18-42	
H	3 9/16 WAS 1 3/16 (WT. CHG. NEG)	3-18-42	
J	ADDED DIMS 3 5/8, 3/4, 3/8 (2) & 1 (2) IN VIEW B-B NO WT. CHG		
K	ADDED IN B/M -2 REQ. CREATED FOR -2R & -2L ASSY. FOR PBY-5 & PBY-5A WT. 2L: .85 - 2R: .64	2-25-42	

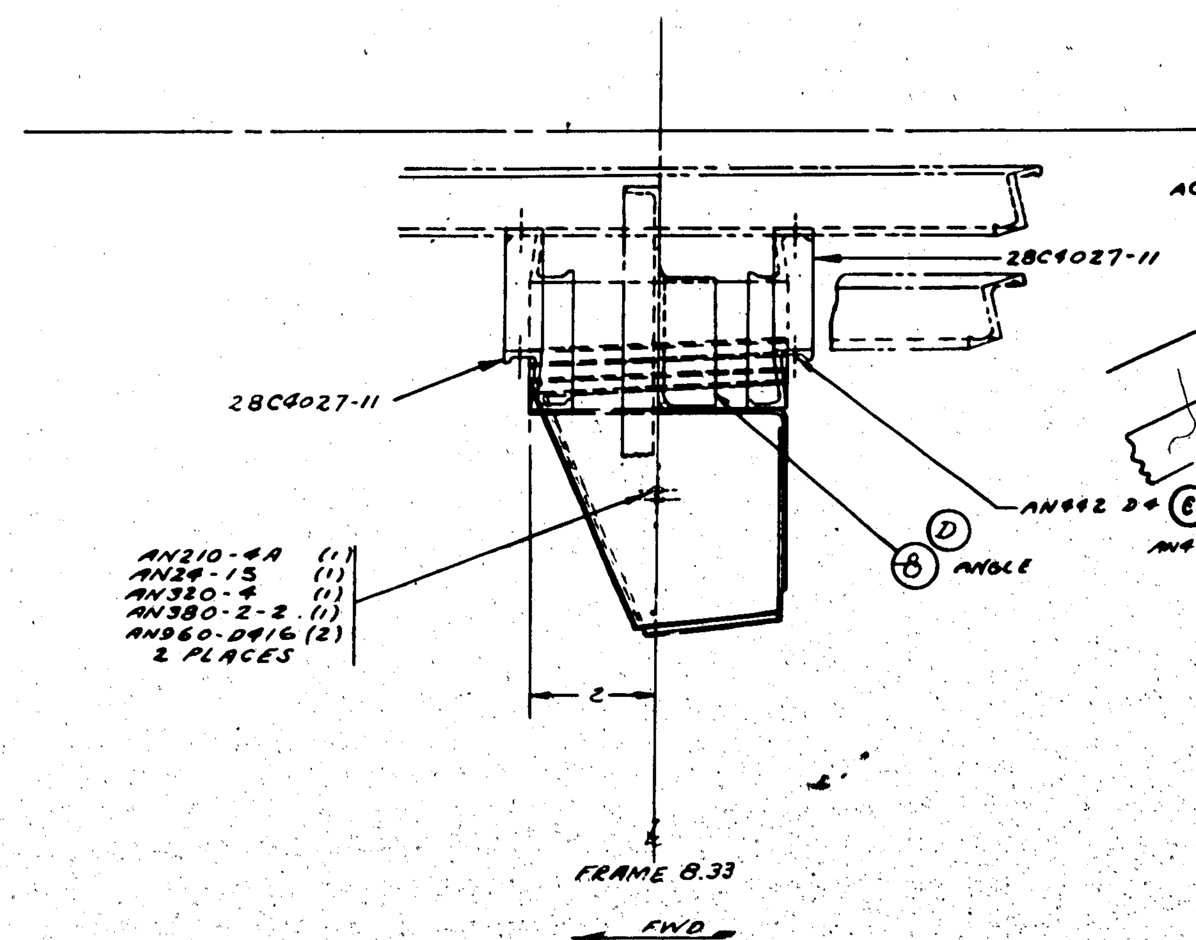

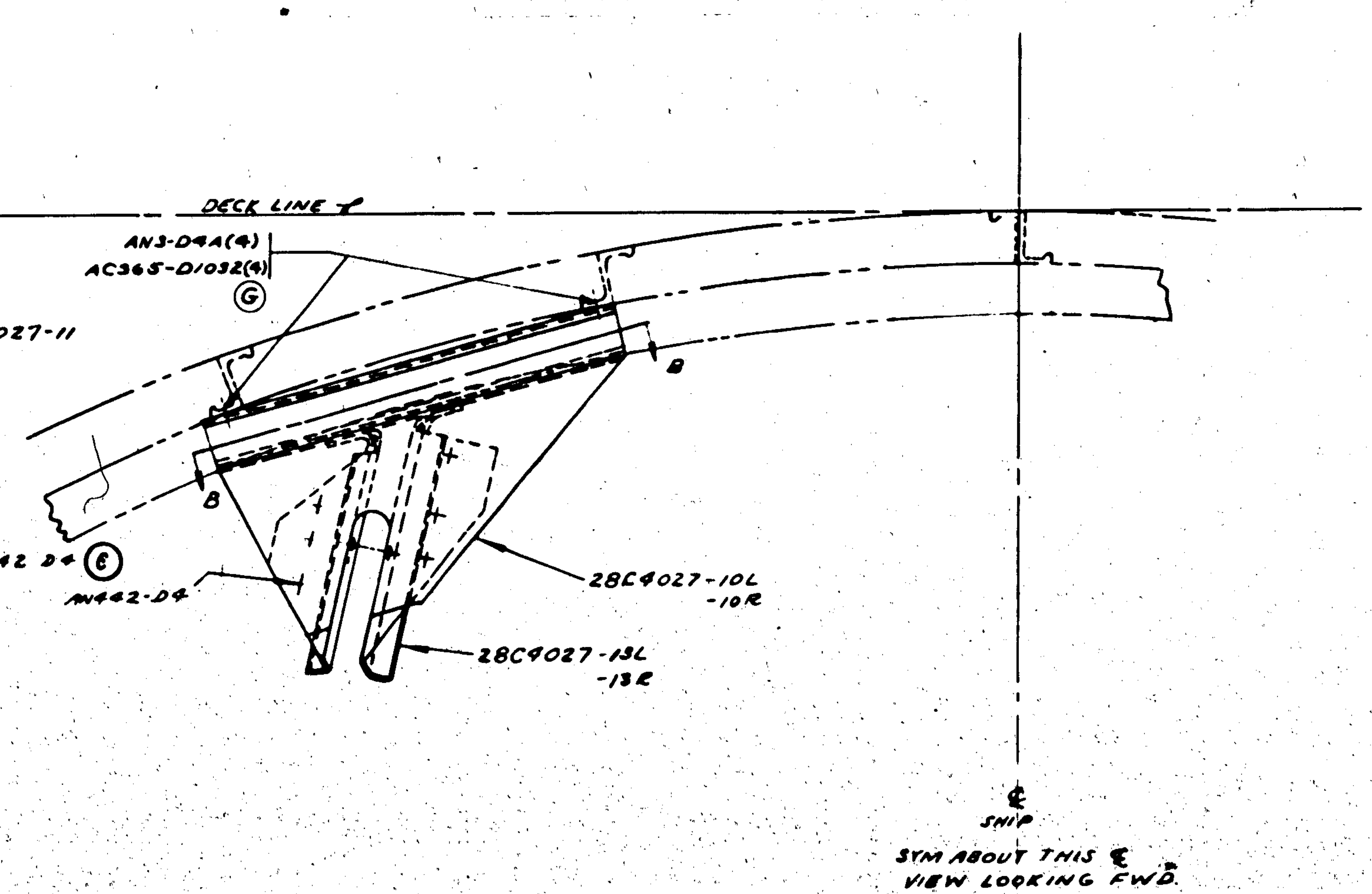

FOR-0 ASS'Y ONLY

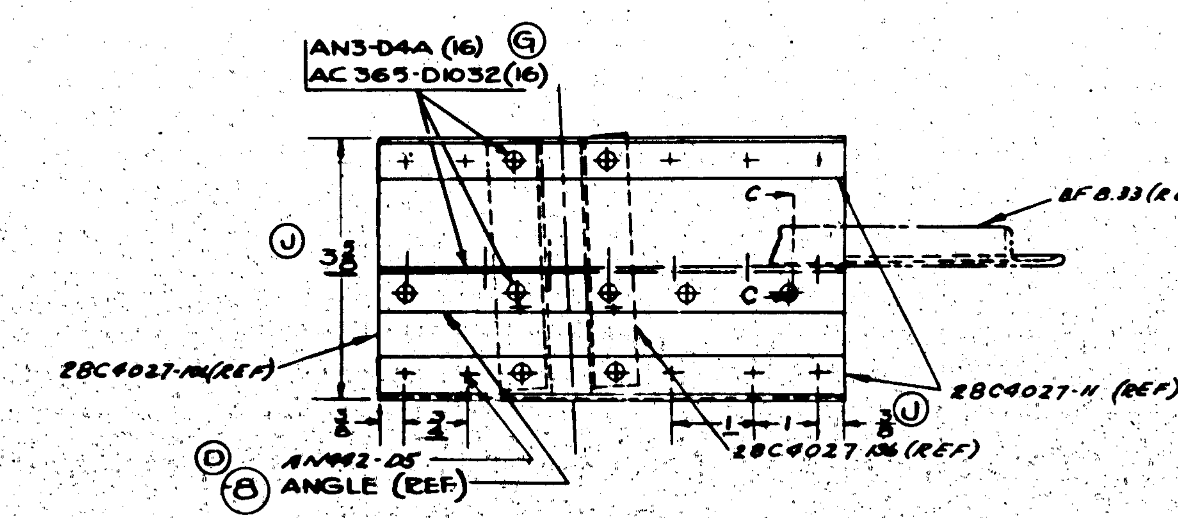

VIEW B-B
FOR-0 ASSY ONLY

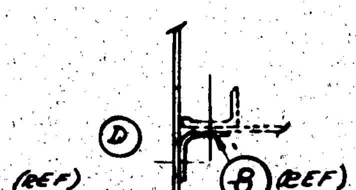

SECTION C-C

GP GREEN PRIME
FINISH CODE

Z	ANODIC TREATMENT
P	P-27 PRIMER
AP	ALUMINIZED PRIMER
C	CADMIUM PLATE

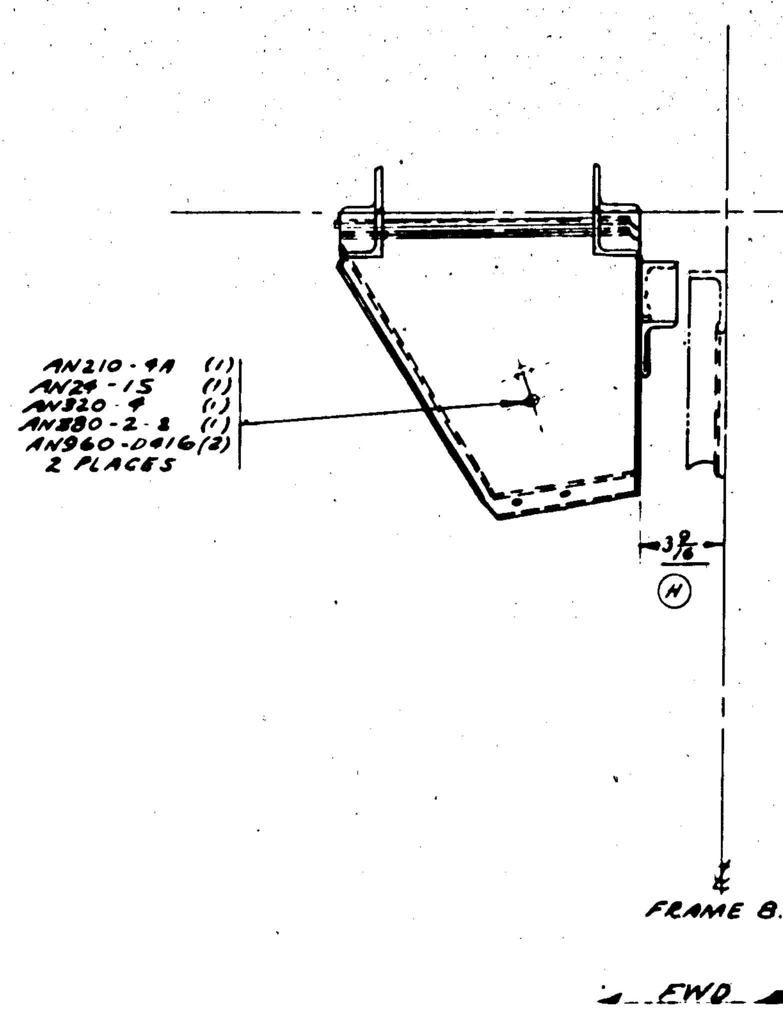

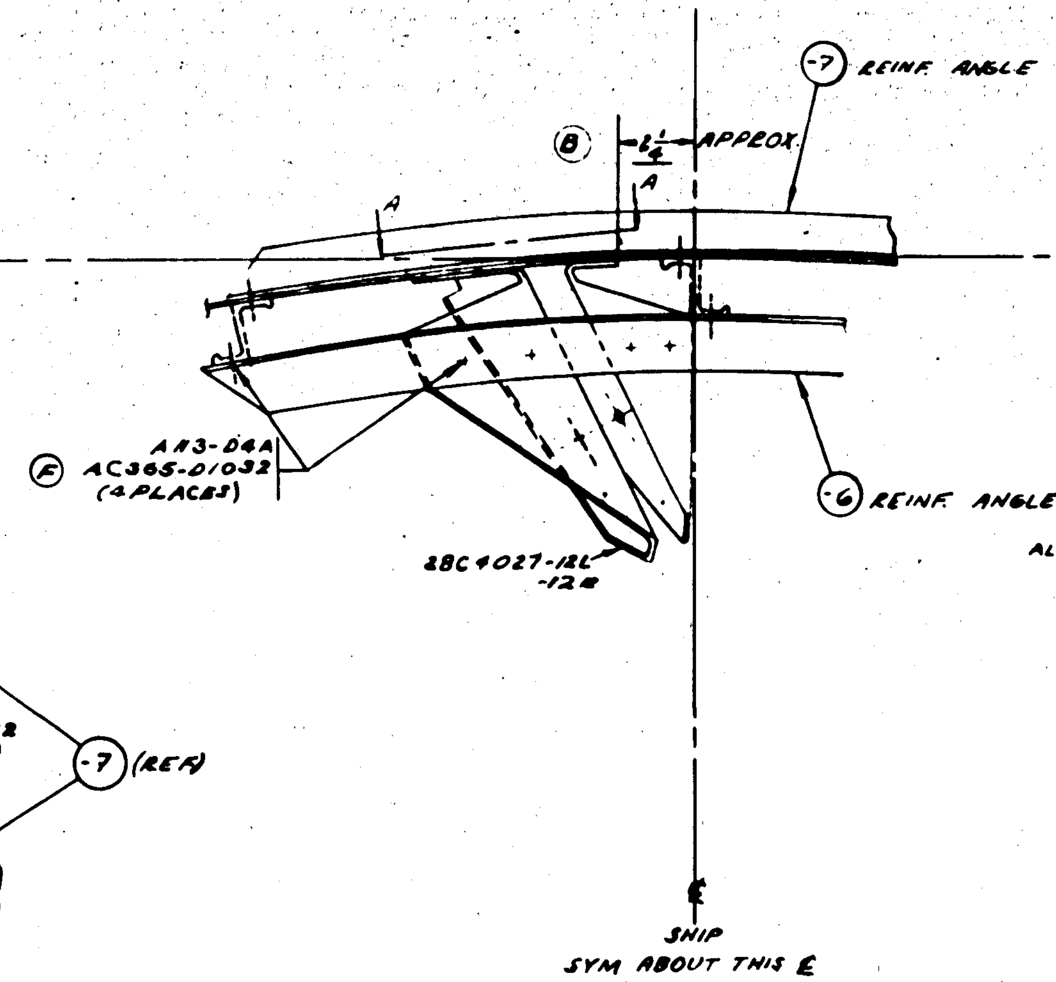

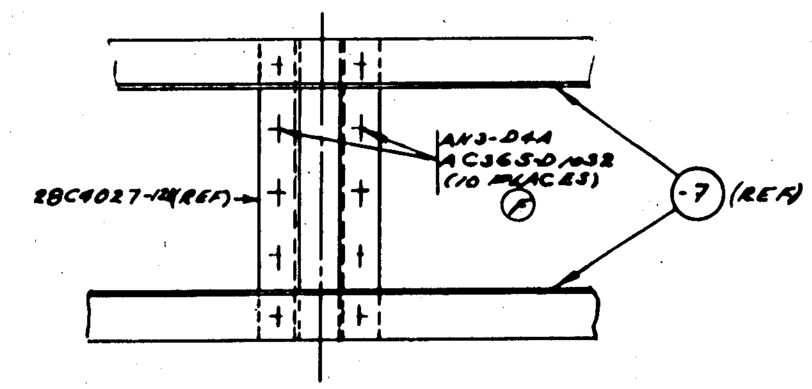

VIEW A-A

	ASSY DASH NO.	MODEL	NEXT ASSY	REQ.
MCR23-1	-2R	PBY-5	28C5086	1
	-2L	PBY-5	28C5086	1
MCR178-15	-2R	PBY-5A	28C5564	1
	-2L	PBY-5A	28C5564	1
	-R	PBY-5B	28C5500	1
	-L	PBY-5B	28C5500	1
C-68476	-R	PBY-5A	28C5564	1
	-L	PBY-5A	28C5564	1
	-R	28-5AMC	28C5750	1
	-L	28-5AMC	28C5750	1
	-R	28-5MN	28C5500	1
	-L	28-5MN	28C5500	1
	-R	28-5ME	28C6500	1
	-L	28-5ME	28C6500	1
	-R	28-5MC	28C5500	1
	-L	28-5MC	28C5500	1
	-R	28-5MA	28C5500	1
	-L	28-5MA	28C5500	1
ALL EXCEPT MCR23-1	L&R	28-5AMN	28C5750	1&1
	L&R	PBY-5	28C5086	1&1
C-70496 & C-77715	-R	PBY-5A	28C5700	1
	-L	PBY-5A	28C5700	1
C-70496	-R	PBY-5	28C5000	1
	-L	PBY-5	28C5000	1
	-R	XPBY-5A	28C4025	
	-L	XPBY-5A	28C4025	

REQUIREMENTS PER AIRPLANE

REPLACES 28C4026 OF 7-31-39
REPLACED BY
LIMIT ON DIMENSIONS UNLESS OTHERWISE SPECIFIED ± 1/32
SCALE 6" = 1'-0"
STAMP PART NUMBER WHERE SHOWN

(C)

PART No	STOCK	MATERIAL	SPEC.	-0 LH	-0 RH	-2 LH	-2 RH	-3 LH	-3 RH	-4 LH	-4 RH	-5 LH	-5 RH
AN442-D4													
AN442-D4													
AN3-D4A				34	34	14	14						
AC365-D1032				34	34	14	14						
AN960-D416				4	4	2	2						
AN380-2-2				2	2	1	1						
AN320-4				2	2	1	1						
AN24-15				2	2	1	1						
AN210-4A				2	2	1	1						
-13R					1								
-13L				1									
-12R					1		1						
-12L				1		1							
-11				2	2								
-10					1								
28C4027-14				1									
-8	Y6-A22T X 7 3/16	ALCLAD	47A8-T	1	1								
-7	X1559 X 15 1/2	AL ALLOY CAST	46A9	2	-	2							
28C4026-0	Y2-A25A x 14 3/4	ALCLAD	47A8	1	-	1							

PARTS LIST PER ASSY.

A.C.		9-20-39	[illegible]			[illegible]	
NAVY NONE	Z-P-2 GP	DRAFT	CHECK	STRUCT	MAT	APPROV	ENG
HEAT TREAT	FINISH						

NAME PULLEY INST. - B.F. #8.33 - SURFACE CONTROLS
OPP. HAND 28C4026-E
SIZE G
DWG. NO. 28C4026
CONSOLIDATED AIRCRAFT CORP. SAN DIEGO, CALIF.

LET	ALTERATION	DATE	BY

LET	ALTERATION	DATE	BY
A	CORRECTED DIMENSIONS ADDED -10 & -10A -11 & -11A SHTS. ADDED -11, -12R, -12L, & -13R. ADDED Q808-D4-20 AN 442-4DA	9/6/50	
B	FLANGE TRIMMED A 3 PLACES 1/16 WAS 1/8, 1/4 WAS 1/8, R.O. 7.500	9/21/50	
C	REPLACED AL402-4DA WITH AL402-DA	11/20/50	
D	CHANGED -12 & -12L TO -9 &	3/8/51	
E	47A11-A WAS 47A10-T	7/20/51	
F	47A10-A WAS 47A10-T	8/24/51	
G	47A19-A WAS 47A10-T	10/1/51	
H	CHANGED PER PAYTABLE -11 & -11A TO -7 &	10/1/51	
J	CHANGED ST. (47A10-T) TO S.O. (47A10-A) FROM -3 & -4 W.T. CHG.	5/16/52	
K	ON -10 & -10R 3 15/16 DIM. WAS 4 1/16	4/23/53	
L	IN B/M MATL FOR -11 WAS K9047 X 7/8" WHERE -11 IS SCALED OUT, "Y-37-A2ORT" WAS "K9047" DET. REQ. UP TO DATE DRGS.	9/23/53	

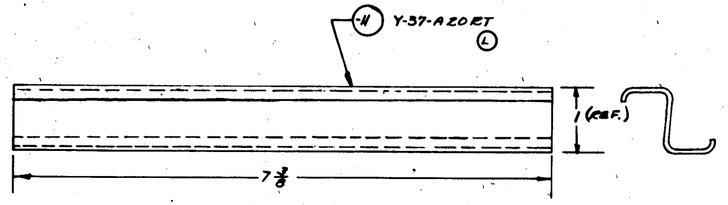

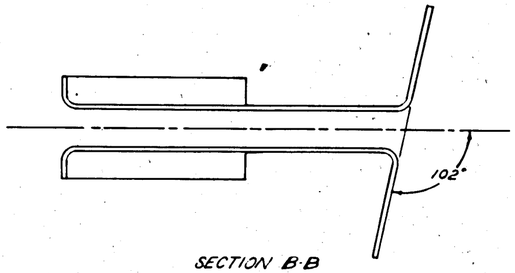

SECTION B-B

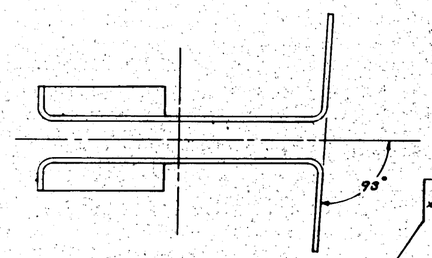

SECTION A-A

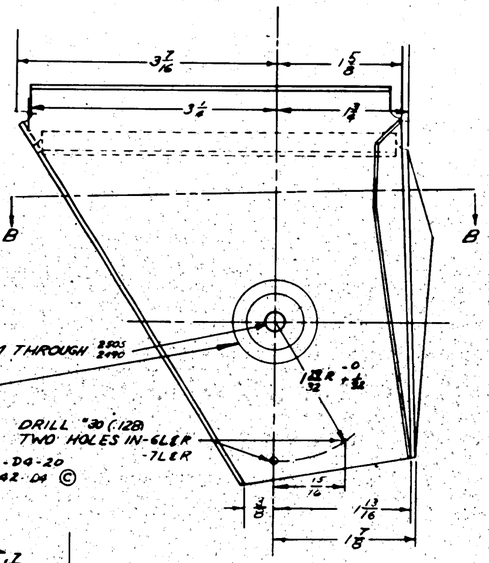

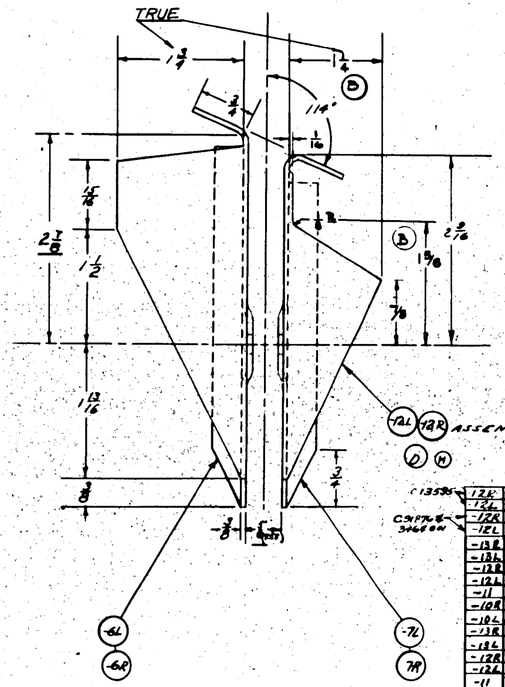

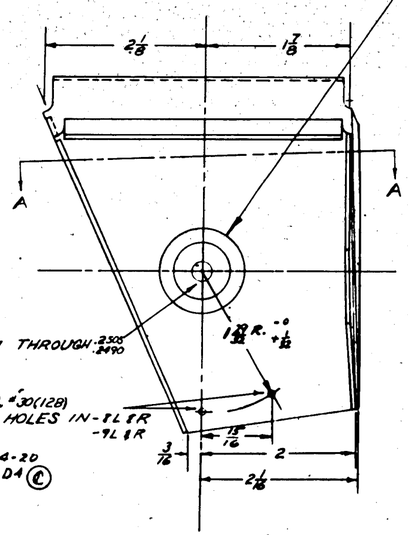

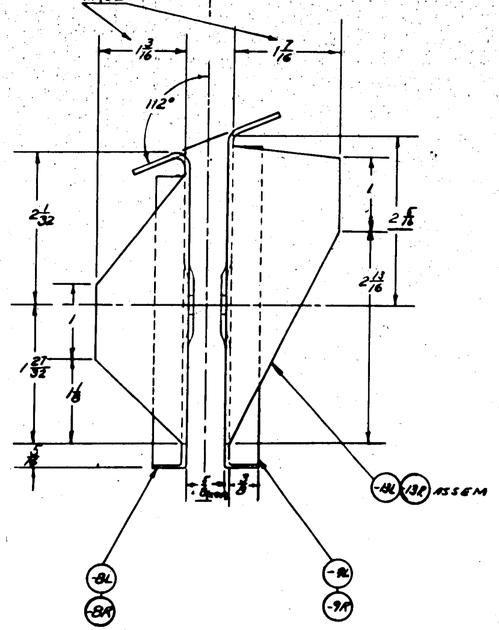

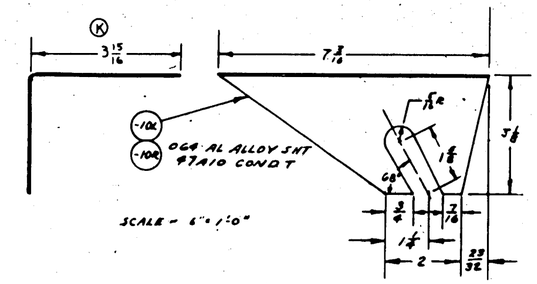

C.70496, 8C918 & 1-89,891-385

C.70496, 77713, & C88476 ONLY FOR PBY-5A

C.13535 C.59876 & 54680N

-12L	PBY-5A	28C4026	/
-12L	PBY-5A	28C4026	/
-12R	PBY-5	28C4026	/
-12L	PBY-5	28C4026	/
-13R	28 SHTS. ASST.	28C4026	16A
-13L			16A
-12R			16A
-12L			16A
-11			4-4A
-10R			16A
-10L	28 SHTS. AS FOLLOWS	28C4026	16A
-13R			16A
-13L			16A
-12R			16A
-12L			16A
-11			4-4A
-10R			16A
-10L	PBY-5A & 5B	28C4026	16A
-13R	PBY-5	28C4026	/
-13L			/
-12R			/
-12L			/
-11			4
-10R			/
-10L	PBY-5		/
-13R	XPBY-5A	28C4026	/
-13L			/
-12R			/
-12L			/
-11			4
-10R			/
-10L	XPBY-5A	28C4026	/

ASSY SHOWN	MODEL	NEXT ASSY	REQ
REQUIREMENTS PER AIRPLANE			
REPLACED		CAGE NO.	
REPLACED BY		ACT NO.	
SCALE 12"=1'0			

STAMP PART NUMBER WHERE SHOWN

ALL UNMARKED RADII 1/8

GP-GREEN PRIME FINISH CODE

Z	ANODIC TREATMENT
P	P-27 PRIMER
AP	ALUMINIZED PRIMER
C	CADMIUM PLATE

PART No	STOCK	MATERIAL	SPEC	-9 LH REQ	-9 RH REQ	-8 LH REQ	-8 RH REQ	-7 LH REQ	-7 RH REQ	-6 LH REQ	-6 RH REQ
PARTS LIST PER ASSY.				-0	-12	-13	-4	-5			
-11	Y-37-A2ORT x 7/8										
-10	.064 x 7 7/8 x 6 1/4										
AN442-4DA				2	2	2	2				
Q808-D4-20				2	2	2	2				
-9R	.081 x 5 5/16 x 5	AL. ALLOY SHT.	47A10- R					1			
-9L	x 5 5/16 x 5		- R						1		
-8R	x 4 1/8 x 5 1/2		- A			1		1			
-8L	x 4 1/8 x 5 1/2		- A				1		1		
-7R	x 5 5/8 x 6 1/4		- A	1		1					
-7L	x 5 5/8 x 6 1/4		- A		1		1				
-6R	x 6 1/8 x 7 1/8		- A	1		1					
-6L	.081 x 6 1/8 x 7 1/8	AL. ALLOY SHT.	47A10 - A		1		1				

A.C.			10-3-47	
No.	6R-53	Z-P-2 AL. CAD P	NORTH	
HEAT TREAT		FINISH	DRAFT	CHECK - STRUCT - MAT - APPROV

NAME BRACKETS - ELEV DOWN & RUDDER - PULLEY CONTROLS BP 53

OPP. HAND —

CONSOLIDATED AIRCRAFT CORP. San Diego, Calif.

SIZE G

28C4027

LET	ALTERATION	DATE	BY
A	REVISED LOCATING DIMENSIONS OF -6 & -8 ASSY. & DETAIL DIMENSIONS OF -6 & -8 REVISED STANDARD PARTS	4/6/38	Barton
B	ADDED -2 REQUIREMENTS FOR PBY-5A 28AMC & OA-10 LOCATING DIM FOR -8 & -9 ASSY MODIFIED -10 FOR -11 SUB ASSY & DIM FOR LOCATING	12/5/38	Nelson
C	MATERIAL SPECS CHANGED (Ch No 4) to (4) CONF'T TO CONF A.	3/4/41	SALE
D	ADDED NOTE (4) (BEND RADII) FOR -7 & -8 & CHANGED REQ'S Ch No 8-D4-32 FROM (1) TO (2) (WT. CHG. REQ.)	5/18/51	Powell

PBY-5A 28AMC
S.O. No A-220

Ex A33289
OA-10, PBY-5A, 28AMC

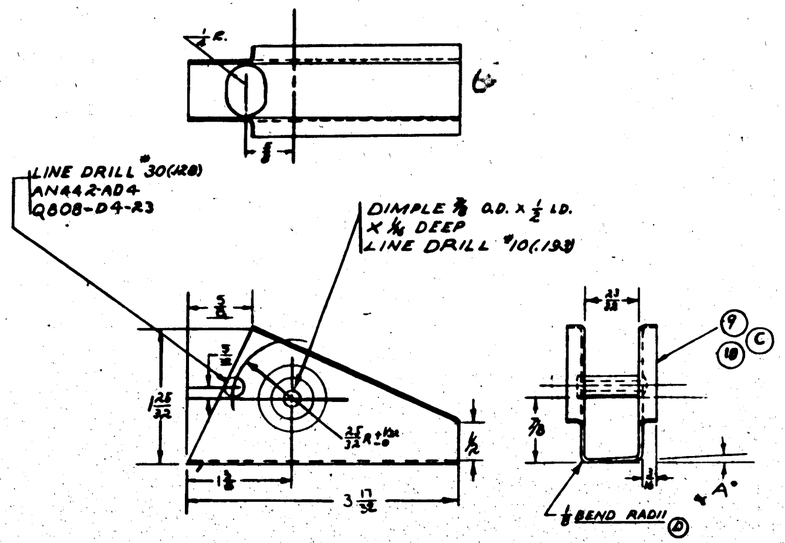

B	
DASH NO	"A"
-9	2 1/8
-10	0°

DETAIL OF -8E-11 SUB-ASSY
SCALE 12" = 1'-0"

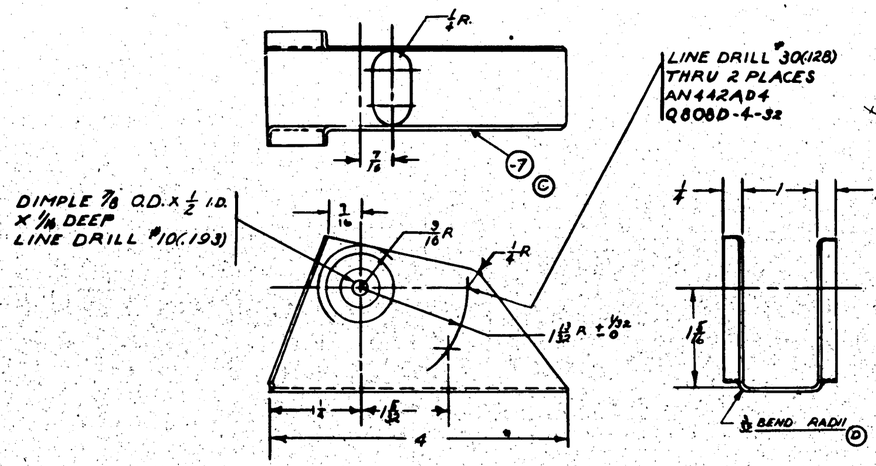

DETAIL - 6 SUB-ASSY.
SCALE 12" = 1'-0"

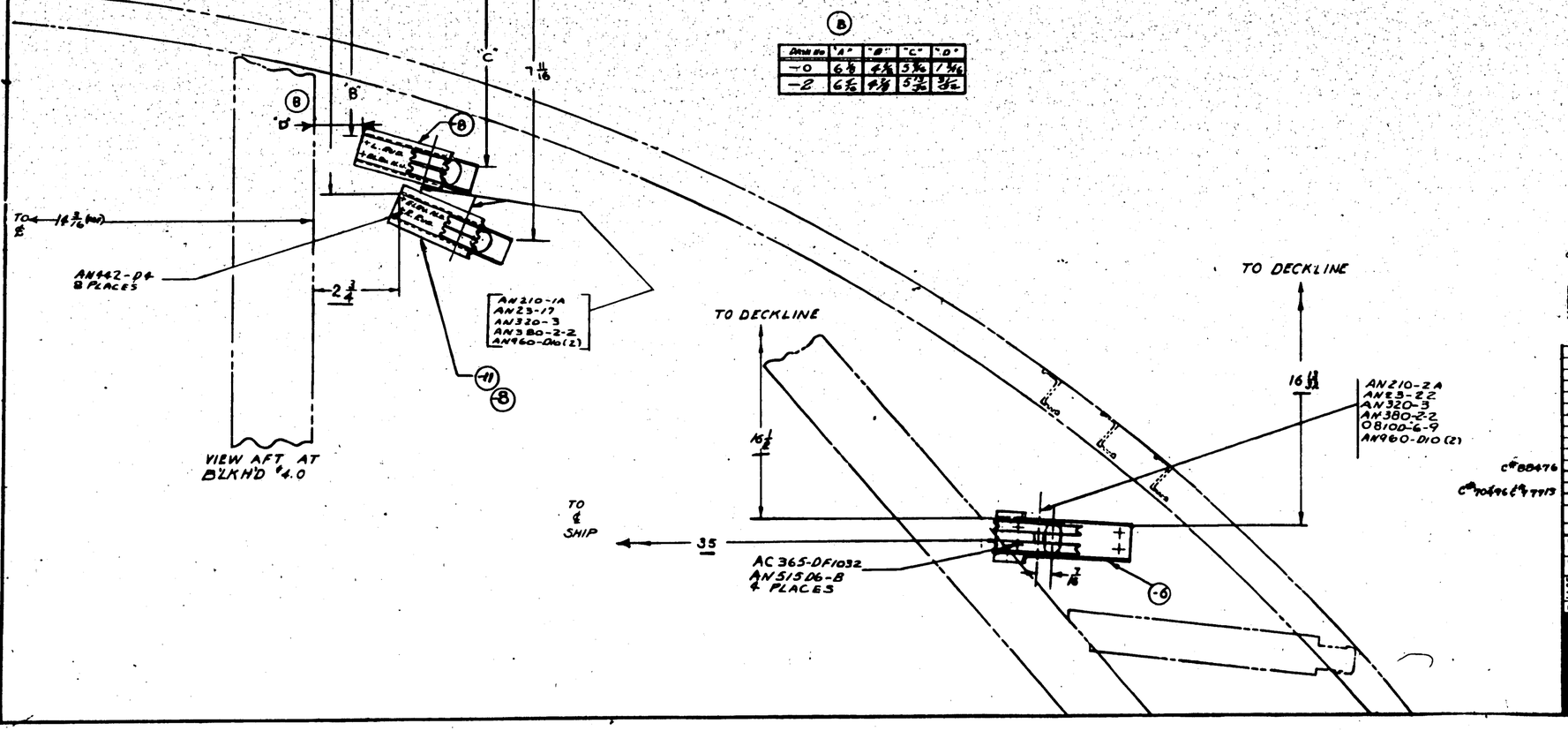

B					
DASH NO	"A"	"B"	"C"	"D"
-0	6 1/8	4 1/8	3 3/16	1 3/16
-2	6 7/8	4 7/8	3 15/16	1 15/16

GP GREEN PRIME
TT-S-00230

Z	ANODIC TREATMENT
P	P-27 PRIMER
AP	ALUMINIZED PRIMER
C	CADMIUM PLATE

C 88476
C 10496 & 7713

DASH NO	MODEL	NEXT ASSY	QUAN
REQUIREMENTS PER AIRPLANE			
-2	28-3MAN	28C3730	1
-2	PBY-5A	PBAC5364	1
-2	28-3AMC	28C3750	1
-2	PBY-5A	28C3700	1
-0	XPBY-5A	28C4025	1

REPLACES
REPLACED BY
ASY. NO.
SCALE 6:1'0" ENLARGED
STAMP PART NUMBER WHERE SHOWN

PART No	STOCK	MATERIAL	SPEC	LH	RH	LH	RH	LH	RH	LH	RH	LH	RH
PARTS LIST PER ASSY.				-0 REQ		-2 REQ		-3 REQ		-4 REQ		-5 REQ	
AN442-D4													
D808-D4-23													
-10	040 X 5/8 X 5 1/16	AL. ALLOY 14	4.34.10 Comp										
-11	SUB ASS'Y												
AN442-AD4													
D808-D4-23													
-9	090 X 3/4 X 5 7/8	AL. ALLOY 14	4.34.10 Comp										
-8	SUB ASS'Y												
AN442-AD4													
D808-D4-32													
-7	090 X 4 3/4 X 5 7/8	AL. ALLOY 14	4.34.10 Comp										
-6	SUB ASS'Y												
AN960-D10				2	2	2	2	2	2	2	2	2	2
AN442-D4				2	2	2	2	2	2	2	2	2	2
AN380-2-2				2	2	2	2	2	2	2	2	2	2
AC365-DF1032				2	2	2	2	2	2	2	2	2	2
AN320-3				2	2	2	2	2	2	2	2	2	2
AN210-2A				2	2	2	2	2	2	2	2	2	2
AN210-1A				2	2	2	2	2	2	2	2	2	2
AN23-22				2	2	2	2	2	2	2	2	2	2
AN23-17				2	2	2	2	2	2	2	2	2	2
AN515D6-8				2	2	2	2	2	2	2	2	2	2
D810-D6-9				2	2	2	2	2	2	2	2	2	2
-11	SUB ASS'Y			1									
-8	SUB ASS'Y				1								
-6	SUB ASS'Y					1							

A C — FOX — 6-8-38 — TWM — GMR — WM — RC
NAVY SB-53 — 2-P-2 — DRAFT — CHECK — STRUCT — MAT — APPROV — ENG
HEAT TREAT — FINISH

NAME INSTALL.- CONTROLS.- TAB BRACKETS - STR. #4.0
CONSOLIDATED AIRCRAFT CORP. San Diego, Calif.
OPP HAND
DWG G
DWG 28C4030

R

INCORPORATES
PBY-1 BU. AER. CHG. #(3)
PBY-2 " " #(3)

E.O. 38648
ALL MODELS

SUPPLIES & EQUIPMENT CLASSIFICATION			
LET	ALTERATION	DATE	BY
A	TRACED	8-21-41	[illegible]
B	ADDED NEW DIM. & REVISED DIM. CODE	8-[illegible]-41	[illegible]
C	CHANGED LOCATING DIM. FOR PBY-5 STA. "6"	11-25-41	HARRY
D	CHGD. AN526DD1032-6 TO READ AN526DD1032-6 & AN364D1032	2-20-42	GRANT

STRINGER "602 (REF)
STRINGER "604 (REF)
AN526DD1032-6 AC364D1032 4 EACH REQ'D (D)
5 1/2
28C4056
DECK LINE
SHIP
VIEW LOOKING AFT AT BULKHD. "6
30 1/2
STRINGER "614 (REF)
28C4056
STRINGER "616 (REF)
(D) AN526DD1032-6 AC364D1032 4 EACH REQ'D
AN210-8A
AN83-1B
AN520-5
AN960-10
AN380-2-2
3 15/16
13 5/16 FOR PBY-5
(E)
6 7/16
15 5/8 FOR PBY-5
(E) (D)
STA. "6

									LH REQ.	RH REQ.	PART NO.	LH REQ.	RH REQ.
(E)													
	AN526DD1032-6	A											
	AC364D1032	A											
	AN960-10	A											
(D)	PBY-5A&B	28C4050	1	BA									
	PBY-5	28C4060			AN380-2-2	A							
	PBY-1	28C4-50			AN520-5	A							
	PBY-2	28C4-50			AN960-10A	A							
	PBY-3	28C4050			AN83-1B	A							
	PBY-4	28C4050									28C4056	A	

REPLACES											
REPLACED BY											
LIMIT ON DIMENSIONS UNLESS OTHERWISE SPECIFIED ± 1/64											
[redacted]											
ENGR. APPROVED	7-[illegible]-39 DATE	O.H.	MODEL	NEXT ASSY.	REQ.	STD PARTS	REQUIREMENTS PER AIRPLANE		MAT.	PARTS LIST PER ASSY.	
CALC. WT. .060	ACT. WT.										
SCALE 6"=1'0"		AC									
		NAVY NOTED	NO TAB	—		—					R
		MATERIAL	SPEC.	HEAT TREAT		FINISH			DRAFT	CHECK	ENGR.	ENG.

CONSOLIDATED AIRCRAFT CORP. BUFFALO, N. Y.
STAMP PT. No. WHERE SHOWN

NAME INST. RUDDER LOCK STA. "6" PULLEY BRKT.

OPP. HAND —

SIZE G

28C4059

LET	ALTERATION	DATE	BY	LET	ALTERATION	DATE	BY
				H	TRACED, ADDED DETAIL -2 NO. WT. CHG.	5-21-4[illegible]	[illegible]
				J	ADDED 28C1041 CONTROL YOKE WHEEL (REF.) NO WT CHG.	5-27-4[illegible]	[illegible]

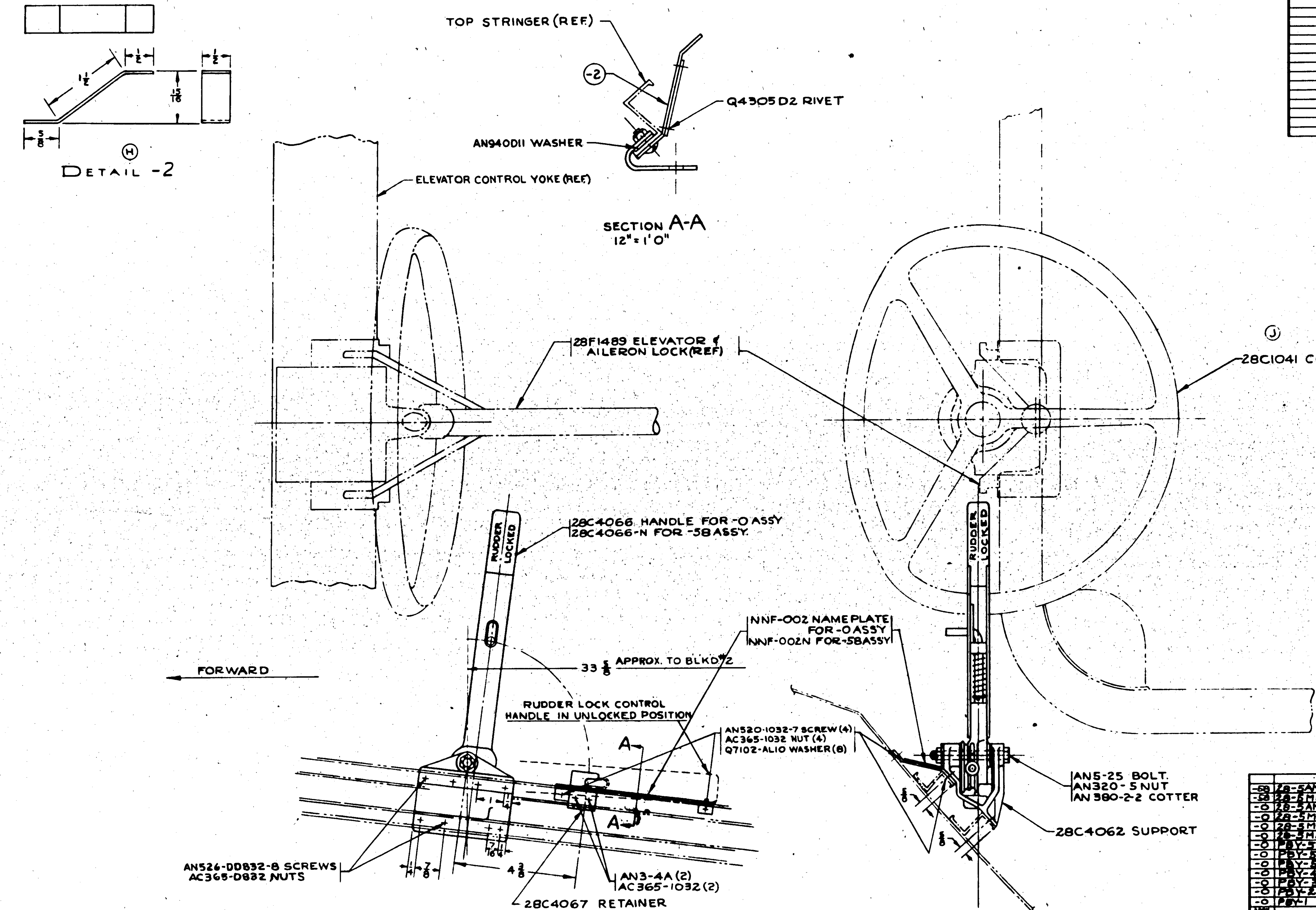

ASSY. DASH No.	MODEL	NEXT ASSY	No.
-58	28-5AMN	28C4050	1
-58	28-5MN		1
-0	28-5AMC		1
-0	28-5ME		1
-0	28-5MC		1
-0	28-5MA		1
-0	PBY-5B		1
-0	PBY-5A		1
-0	PBY-5		1
-0	PBY-4		1
-0	PBY-3		1
-0	PBY-2		1
-0	PBY-1	28C4050	1

REQUIREMENTS PER AIRPLANE

REPLACES 28C4060-6-23-38 CALC. WT.

REPLACED BY ACT. WT.

LIMIT ON DIMENSIONS UNLESS OTHERWISE SPECIFIED ± 1/32 — SCALE 12" = 1'0"

STAMP PART NUMBER WHERE SHOWN

PART No	STOCK	MATERIAL	SPEC.	REQ. -0	REQ. -2	REQ. -3	REQ. -4	REQ. -58
Q7102-AL10				8				8
AC365-1032				6				6
AN520-1032-7				4				4
Q4305-D2				4				2
AN940-D11				2				2
AN3-4A				2				2
AN380-2-2				1				1
AN320-5				1				1
AN5-25				1				1
AC365-D832				8				8
AN526-DD832-8				8				8
NNF-002				1				
NNF-002N								1
28C4067				1				1
28C4066-N								1
28C4066				1				
28C4062				1				1
28C4060-2	.050 x 1/2 x 2 3/4	24ST-AL-AL SHT.	47A10-T	2				2

PARTS LIST PER ASSY.

A C		HALV.	VINJE			LCW	
NAVY NONE	Z-P	6-23-38	6-23-38			2-24-39	
HEAT TREAT	FINISH	DRAFT	CHECK	STRUCT	MAT	APPROV	ENG.

NAME INSTALLATION-CONTROL RUDDER LOCK-COCKPIT.

OPP. HAND

DWG. SIZE G — 28C4060

CONSOLIDATED AIRCRAFT CORP. SAN DIEGO, CALIF.

R 28C4060

LET	ALTERATION	DATE	BY
K	TRACED NO WT. CHG.	10-1-43	CAMPBELL

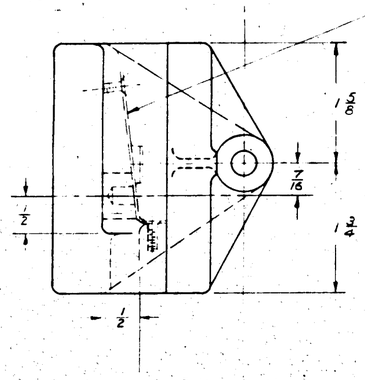

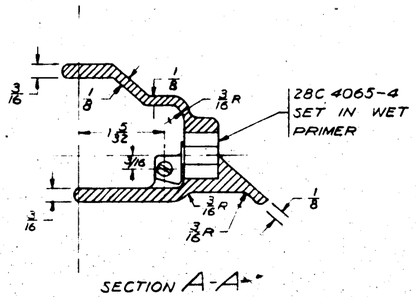

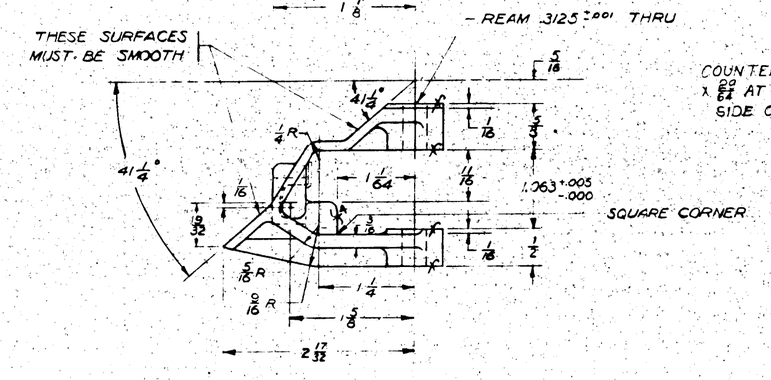

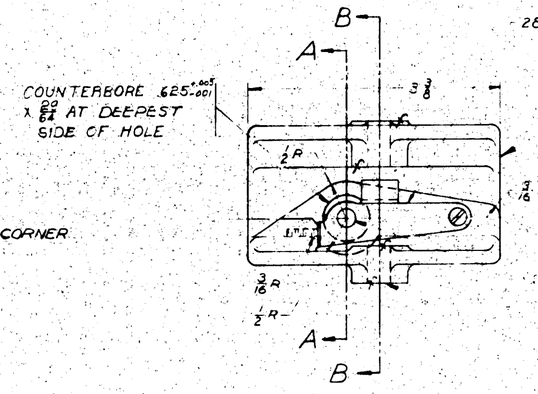

NOTE:
1. ALL RADII 1/8 EXCEPT AS NOTED
2. ✓ INDICATES ROUGH MACH. FINISH. NO STOCK ALLOWANCE REQ.

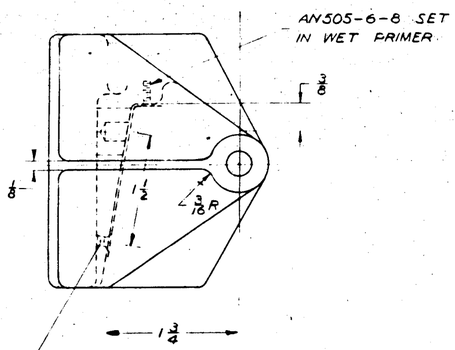

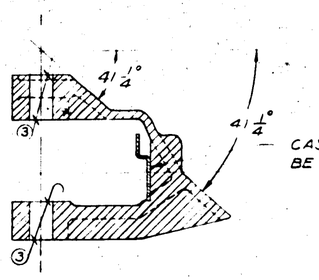

MATERIALS NOTE
-2 MAY BE MADE FROM:
1. AL. ALLOY, 195 T4 SPEC. AN-QQ-A-390 CL. I T.S. 29,000 P.S.I. OR
2. AL. ALLOY, S195 T6, SPEC. AN-A-5 CL II, T.S. 32,000 P.S.I.

FINISH CODE	
Z	ANODIC TREATMENT
P	P-27 PRIMER
GP	GREEN PRIMER
C	CADMIUM PLATE

ASSY DASH NO.	MODEL	NEXT ASSY	REQ.
PBY-5B	28C4060		1
PBY-5A	28C4060		1
PBY-5			1
28-5MN			1
28-5ME			1
28-5MC			1
28-5MA			1
28-5AMN			1
28-5MC			1
DBY1234	28C4060		1 EA

REQUIREMENTS PER AIRPLANE

REPLACES 28C4062 P-7-39 .22 CALC WT

REPLACED BY ACT WT

LIMIT ON DECIMAL ONE PLACE DIMENSIONS ARE ± .031 TWO PLACE ± .010 ON MACH. SCALE 12"=1'-0"

STAMP PART NUMBER WHERE SHOWN

PART No	STOCK	MATERIAL	SPEC.	LH REQ.	RH REQ.	LH REQ.	RH REQ.	LH REQ.	RH REQ.	LH REQ.	RH REQ.
PARTS LIST PER ASSY.				-0	-2	-3	-4	-5			
28C4065-4								1			
28C4061								1			
	-6	MACHINED CSTG. MAKE FROM -2						1			
	-2	ROUGH CSTG.						-			
	-4										

A C		HALY				LCW	
NAVY NOTED	ZP2GP	6-27-39				2-7-39	R
HEAT TREAT	FINISH	DRAFT	CHECK	STRUCT	MAT	APPROV	ENG.

NAME SUPPORT-RUDDER LOCK-COCKPIT

OPP. HAND

DWG. SIZE G

28C4062

CONSOLIDATED VULTEE AIRCRAFT CORP. SAN DIEGO DIVISION . . SAN DIEGO, CALIF.

28C4062

INCORPORATES
PBY-1 BU. AER. CHG #131
PBY-2 " " #91
E.O. 86834
E.O. 89036

ED. A 37784

SUPPLIES & EQUIPMENT CLASSIFICATION			
LET	ALTERATION	DATE	BY
G	TRACED TO DATE	2-17-39	[illegible]
H	DIM. ⅛" ADDED	4-26-40	[illegible]
I	JOGGLE THRU OUT, REF LEGITIMATE	5-17-40	[illegible]
J	CALCULATED AT DWG. RELEASED		
J	ADDED CHANGE "I" TO APPLY TO BOTH ENDS OF -4 PART (WT. CHG. NEG.)	6-23-42	[illegible]
K	CHG'D RIVET PATTERN OF -9 (4) PLACES NO WT. CHG.	9-18-42	[illegible]
L	ON FACE FOR SEE REPLACED NOTE 3/4 x 3/4 x 1/8 EXT ANGLES DIE # K6401 -AL ALLOY (24 ST) SPEC. 46A9 COND. T WITH -.5 MATERIAL: Y-2-A28T X6 1/8; -6 MATERIAL: Y-2-A28T X3" WT. CHG. NEG.	4-26-43	[illegible]
M	REMOVED Q614-D5-2(2) SPACER 28C4070-12(.064) X 3/4 X 2 1/8 AL. ALLOY SH. 24 ST. WAS 28C4070-10(.25) X 3/4 X 2 1/8 AL. ALLOY SH. 24 ST. WT. CHG. NEG.	5-21-43	FOSTER
N	Q848-D44-12 WAS Q648-D44-12 ON FACE OF DWG. (B/M. NO WT. CHG.	10-19-43	[illegible]

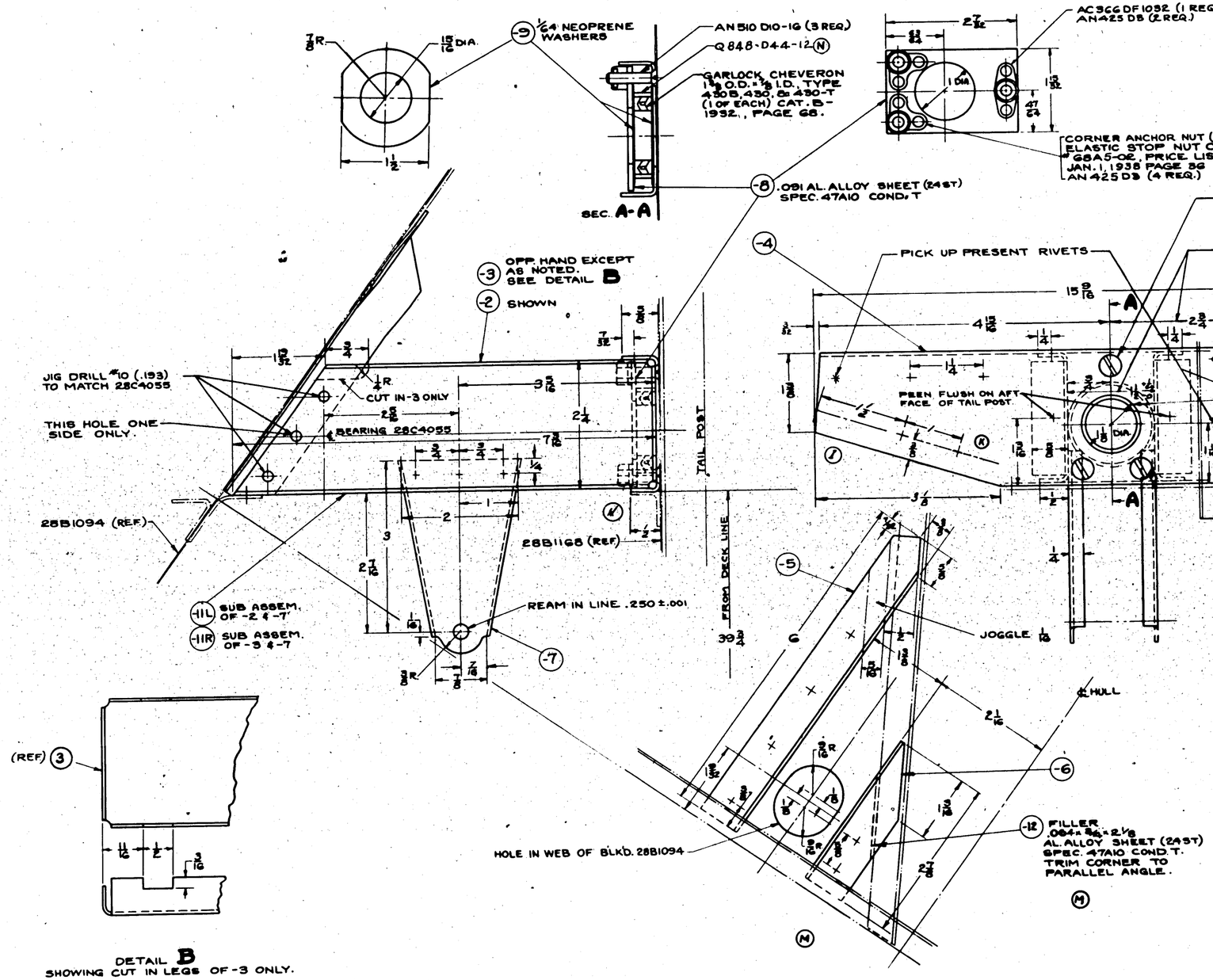
7/8 R.
15/16 DIA.
1 1/2
-9 1/64 NEOPRENE WASHERS
AN 510 D10-16 (3 REQ.)
Q 848-D44-12 (N)
GARLOCK CHEVERON 1 1/8 O.D. x 1/8 I.D. TYPE 430B, 430, & 430-T (1 OF EACH) CAT. B-1932., PAGE 68.
SEC. A-A
-8 .081 AL. ALLOY SHEET (24ST) SPEC. 47A10 COND. T
AC 366 DF 1032 (1 REQ.)
AN 425 D8 (2 REQ.)
CORNER ANCHOR NUT (2 REQ.) ELASTIC STOP NUT CORP. G8A5-02, PRICE LIST # 364 JAN. 1, 1938 PAGE 56 AN 425 D8 (4 REQ.)
-3 OPP. HAND EXCEPT AS NOTED. SEE DETAIL B
-2 SHOWN
JIG DRILL #10 (.193) TO MATCH 28C4055
THIS HOLE ONE SIDE ONLY
CUT IN-3 ONLY
BEARING 28C4055
28B1094 (REF.)
28B1168 (REF.)
TAIL POST
-11L SUB ASSEM. OF -2 & -7
-11R SUB ASSEM. OF -3 & -7
REAM IN LINE .250 ± .001
-7
FROM DECK LINE
-4
PICK UP PRESENT RIVETS
JIG DRILL 3/16 WITH HOLES IN -8 C'SINK .82° x 3/8, 3 PLACES.
CHANNELS MUST BE JIG LOCATED TO DIMENSIONS SHOWN & PARALLEL TO ℄ OF SHIP TO INSURE PROPER LINE UP OF PIN 28C4069 (REF.)
℄ HULL & RUDDER HINGE
REPLACE PRESENT RIVETS. TO BE FLUSH ON FRONT FACE OF TAIL POST.
PEEN FLUSH ON AFT FACE OF TAIL POST
HOLE THRU -4 AND WEB OF TAIL POST 28B1168 (REF.)
28B1168-12 (REF.)
-5
JOGGLE 1/8
℄ HULL
-6
-12 FILLER .064 x 5/8 x 2 1/8 AL. ALLOY SHEET (24ST) SPEC. 47A10 COND. T. TRIM CORNER TO PARALLEL ANGLE.
HOLE IN WEB OF BLK'D. 28B1094
(REF) 3

DETAIL B
SHOWING CUT IN LEGS OF -3 ONLY.

NOTES
1. MATERIAL & SIZES
-2, -3, -4, & -7 : .064 AL ALLOY SHEET (24 ST) SPEC. 47A10 COND. 'A' H.T. - BR-53 COND.-T
(L) -5 MATERIAL: Y-2-A28T x 6 1/8.
-6 MATERIAL: Y-2-A28T x 3.
2. ALL BEND RADII = 1/16
3. ALL RIVETS NOT DIMENSIONED LOCATE APPROX. AS SHOWN.
4. ALL RIVETS AN442-D4
5. NOTE: DO NOT ASSEMBLE -11L & -11R SUB ASS'YS. TO -4 UNTIL FINAL ASSY.

GP-GREEN PRIME FINISH COLD

Z	ANODIC TREATMENT
P	P-27 PRIMER
AP	ALUMINIZED PRIMER
C	CADMIUM PLATE

						CORNER ANCHOR NUT PLATE	2
						STRAIGHT CORN. ANGLE SECT.	
						Q 848-D44-12	1
PBY-5B	28T5101	1					
PBY-5A	28T5101	1				-12	1
PBY-5	28T5101	1				-9	2
28-5AMN	28T5101	1				-8	1
28-5AMC	28T5101	1				-6	1
28-5MA	28T5101	1				-5	1
28-5MC	28T5101	1				-4	1
28-5ME	28T5101	1				-7	1
28-5MN	28T5101	1	AN 510 D10-16	3		-3	1
			AC 366 DF 1032	1		ASSY -11R	1
						-7	1
			AN 425 D3	6		-2	1
			AN 442-D4			ASSY -11L	1

REPLACES	ACC'D. 2-27-39 APPROVED DATE										
REPLACED BY	.88 CALC. WT.	ACT. WT.	O.H	MODEL	NEXT ASSY.	REQ.	STD PARTS	LH	RH	PART NO.	REQ.
LIMIT ON DIMENSIONS UNLESS OTHERWISE SPECIFIED ± 1/64	SCALE 12" = 1'-0"		REQUIREMENTS PER AIRPLANE			MAT.	PARTS LIST PER ASSY.				
	AC										
	NAVY NOTED		NOTED	NOTED		Z-P-26P					
	MATERIAL		SPEC.	HEAT TREAT		FINISH					

		YATER		R.
		6-20-39	6-21-39	
		DRAFT	CHECK	ENGR.

CONSO DATED VACUUM CORP. BUFFALO N.Y.
STAMP PT. No. IF ERE SHOWN

NAME: SUPPORT- CONTROL RUDDER LOCK-TAIL POST

OPP HAND
SIZE G
28C4070

R 28C4070

LET	ALTERATION	DATE	BY	LET	ALTERATION	DATE	BY
				H	TRACED NO WT. CHG.	10-2-43	[illegible]

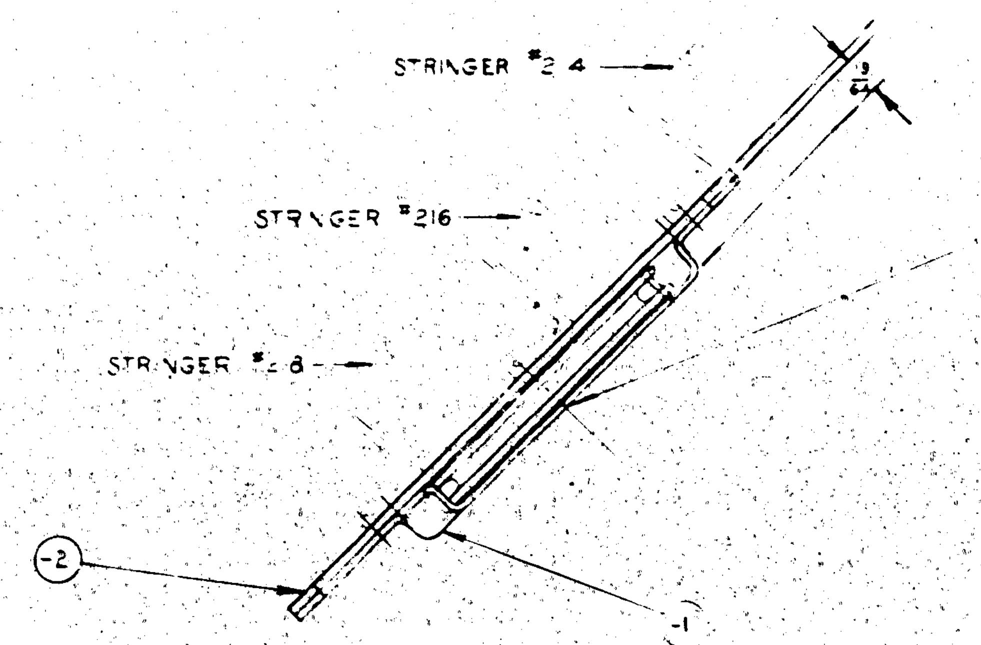

VIEW LOOKING FORWARD

-3 BOLT-MAKE FROM QS105-C-13 BY DRILLING COTTER HOLE #50 (.070) IN THREADED END 3/16 FROM END OF GRIP.
AN210-2A-PULLEY
AN320-3-NUT
AN960-D10-WASHER
AN380-2-2-COTTER

(.193) DIA. HOLE 4 PLACES
AN520-D10-10
AN345-D10
AN960-D10
AN935-10

-4 SUB ASS'Y

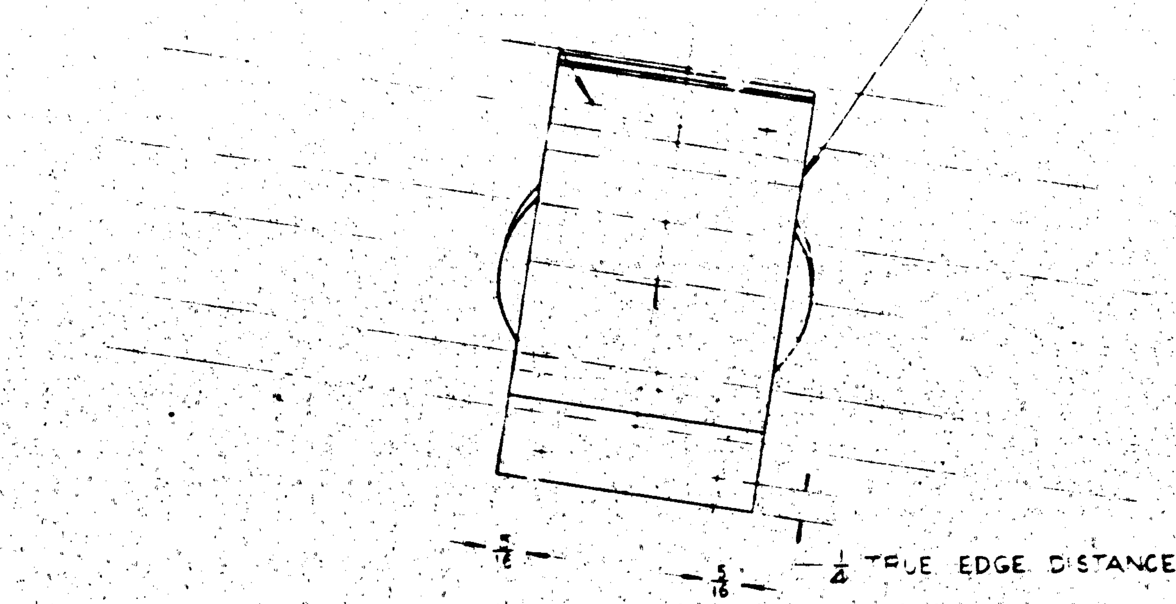

44 1/2 APPROX. TO BLK-HD #2

NOTE: LOCATE ON INSTALLATION TO SUIT CABLE LENGTH.

FORWARD

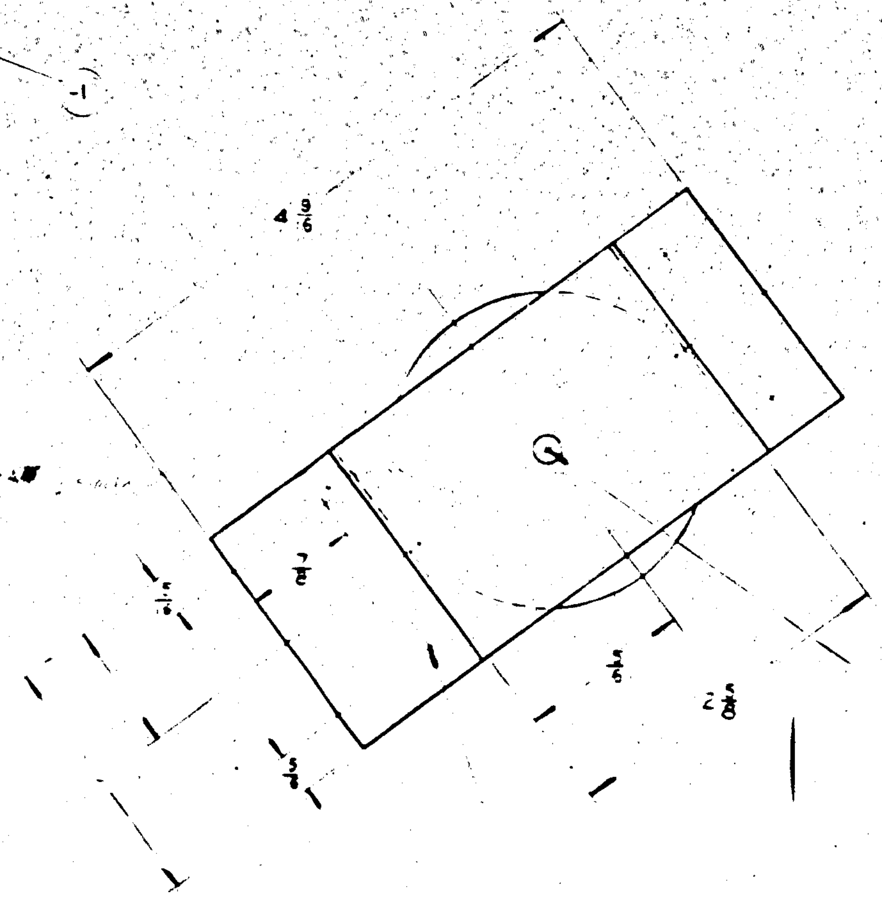

(.193) DIA. HOLE THRU C'S'K IN -2 ONLY 100° x 3/8 DIA.

— AN 425-D4 C'S'K. HD. TO BE IN -2

NOTES-
1. BEND RADII 1/8.
2. -1 & -2 FINISH ZP.
3. -4 FINISH ZGP.

FINISH CODE	
Z	[illegible]
P	[illegible]
GP	[illegible]
C	[illegible]

ASSY DASH NO.	MODEL	NEXT ASSY	REQ.
	PBY-5A	28C4050	1
	PBY-5	28C4050	
	PBY-5B	28C4050	
	ALL 28-5'S	28C4050	
	PBY-4	28C4050	
	PBY-3	28C4050	1
	PBY-2	28C4050	
	PBY-1	28C4050	1

REQUIREMENTS PER AIRPLANE

REPLACES 28C4079 OF 2-7-39 — CALC WT .25
REPLACED BY
LIMIT ON DIMENSIONS UNLESS OTHERWISE SPECIFIED ± 1/64 — SCALE 2" = 1'0"
STAMP PART NUMBER WHERE SHOWN

PART No	STOCK	MATERIAL	SPEC	REQ -0	REQ -2	REQ -3	REQ -4	REQ -5
-3	NOTED	NOTED	NOTED	1				
-2	.090 x 2 7/8 x 4 [illegible]	AL ALLOY	2C-A-355T	1				
-1	.051 x 2 5/8 x 5 [illegible]	AL ALLOY	2C-A-355T	1				
	4 SUB ASS'Y							
AN960-D10				5				
AN935-10				4				
AN520-D10-10				4				
AN425-D4								
AN380-2-2								
AN345-D10				4				
AN320-3								
AN210-2A								
28C4079-4	SUB ASS'Y							

PARTS LIST PER ASSY.

A.C.		SYPEN		[illegible]		C.H.	
NAVY NONE	NOTED	7-6-38		7-6-38		2-3-39	[illegible]
HEAT TREAT	FINISH	DRAFT	CHECK E/[illegible]	STAT		APPROV	ENG

OPP HAND

NAME BRACKET INST.-RUDDER LOCK-PILOTS' COMP'T-PULLEY

CONSOLIDATED AIRCRAFT CORP. SAN DIEGO, CALIF.

G 28C4079

28C4079

LET	ALTERATION	DATE	BY	APP
A	ADDED DIMS. & STATION	10-27		
B	ADDED DIMS. TO TOP	11-4-41		
C	2.5% WAS 2%	11-10-41		
D	47.00 CONN. B.M. & M.M. WAS 46.00	11-24-41		
	ADDED M.M. DR 35			
E	REMOVED ALL DIMS.	12-2-41		
F	ALTERED DIMS. TO SHOW RADII	12-10-41		
	CUTOUTS FROM 3 PIECES - WAS MADE PERMANENTLY EMERGED.			
G	Q430305 (6) WAS AN 44 CADE (6)			
	ADDED NOTES "COUNTERSUNK - - OUTSIDE" "COUNTERSUNK - - NOTED			
	NO. WT. CHG.	12-21		

PBY-5, AL228-3 E.O. A-3987

EDC-SHELTERS 12-15-41

E.O. A42391A

6AC18854

6AC18201

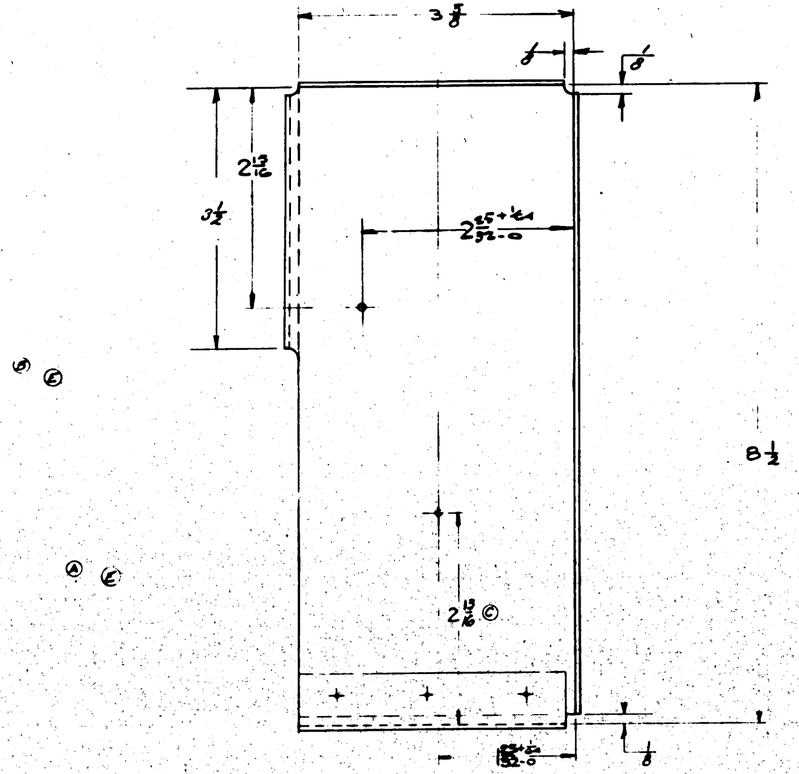

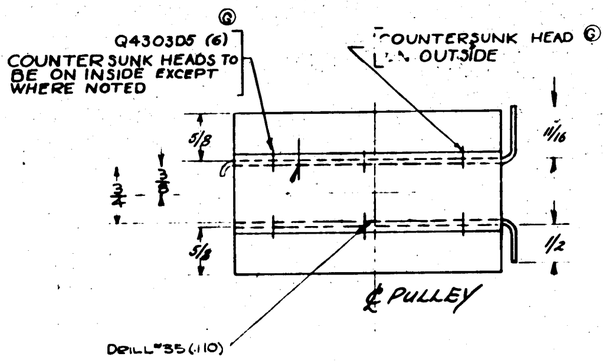

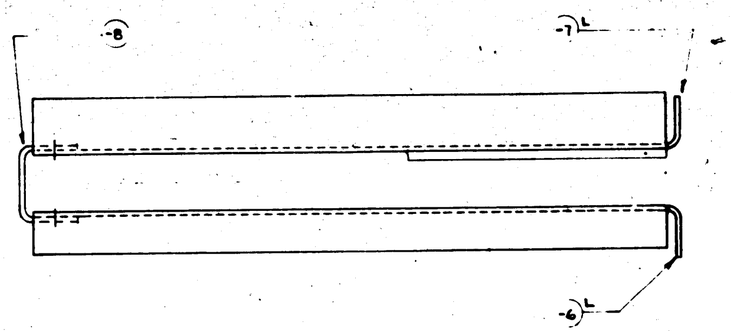

BELIEFS & BEND RADII - 1/8

-R	28-5MC	28C5010	1
-L	28-5MC	28C5010	1
-R	28-5MB	28C5010	1
-L	28-5MB	28C5010	1
-R	28-5MA	28C5010	1
-L	28-5MA	28C5010	1
-R	PBY-5	28C5010	1
-L	PBY-5	28C5010	1
E	28-5MA	28C5010	1
L	28-5MA	28C5010	1
R	PBY-5	28C5010	1
L	PBY-5	28C5010	1

PART NO.	MODEL	NEXT ASSY	QTY
REQUIREMENTS PER AIRPLANE			
REPLACES			SCALE QTY
REPLACED BY			ASY QTY
LIST ON DRAWING SCALE 1/32	SCALE 12"=1'-0"		
STAMP PART NUMBER WHERE SHOWN			

Q430305

PART NO.

A C

NAVY NOMS

NAME BRACKET

RUD. & EL. UPPER

CONSOLIDATED AIRCRAFT

LET	ALTERATION	DATE	BY
A	ADDED DIMENS	2-3-48	J.T.G.
B	REMOVED COMPLETE "X" FROM FLANGE ON SECTION	6-3-48	"
C	E.O. 1856 - L.A. 22201 - 8" DIM. WAS 2 7/16	1955	
D	47 AND COND. A IN B/M. WAS COND. F	6-28-50	
	ADDED SR 53		
E	ALTERED DWG. TO SHOW FABRICATION FROM 3 PIECES - WAS MADE FROM ONE	7-2-51	
F	REMOVED "DIA" FOR ALL DRILLED & REAMED WITH HOLE DIMS. ON DWG.	7-16-58	
G	-7 MAT. 30 WAS ST. (INT. CHG. MFG.)	8-26-58	
H	AN525-DS (6) C'SUNK HEADS INSIDE WERE AN456-ADS (INT. CHG. NEG.)	10-6-58	
J	04303-05 WAS AN456-DS (NO INT. CHG.)	10-6-58	

E.O. A73941

E.O. A33951 A PBY-5

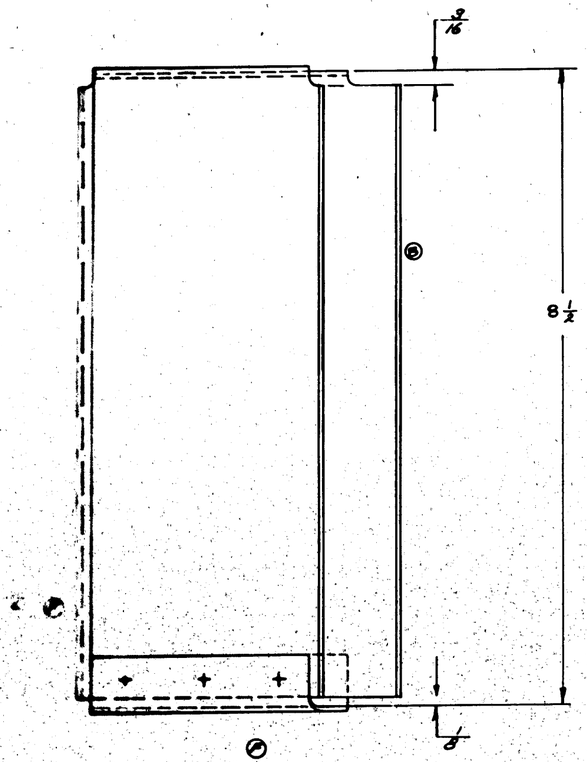

RELIEFS & BEND RADII - 1/8.

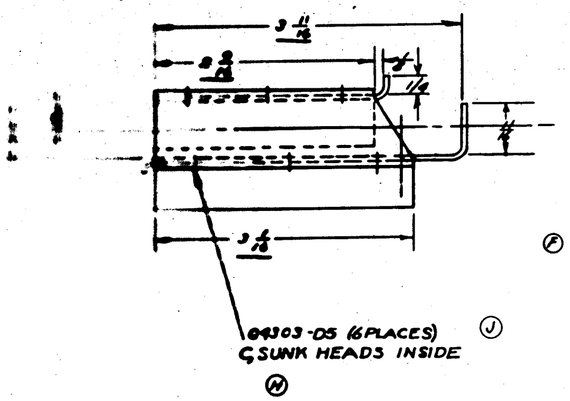

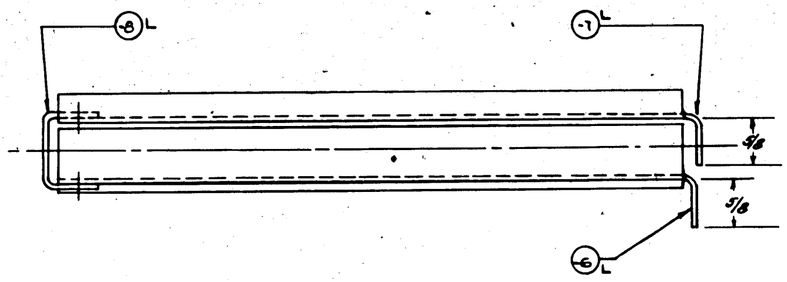

FINISH CODE

Z	
P	PRIMER
AP	
C	CHROMATE

-R	2B-5MN	28C5010	/
-L	2B-5MN		/
-R	2B-5ME		/
-L	2B-5MC		/
-R	2B-5MC		/
-L	2B-5MC		/
-R	2B-5MA		/
-L	2B-5MA		/
-R	PBY-5B		/
-L	PBY-5B		/
-R	PBY-5	28C5010	/
-L	PBY-5	28C5012	/

ASSY DASH NO.	MODEL	NEXT ASSY	QUAN.

REQUIREMENTS PER AIRPLANE

REPLACES — CALC QTY

REPLACED BY — ASY QTY

LIMIT ON DIMENSIONS WHERE DECIMAL DESIGNATION IS GIVEN: 1/32 — SCALE: 12" = 1' 0"

STAMP PART NUMBER WHERE SHOWN

04303-05

PART No.	STOCK	MATERIAL	SPEC	
-8	4 R 100 A 9 1 T 1 3/8			1
-7	4 R 0641 2 3/4 T 2 3/4	2450	2450 A	1
-6	4 R 0641 4 3/4 T 2 3/4	2450	2450 A	1

PARTS LIST PER ASSY. — 0 1 2 3 4 5

A C

NAVY SR-53 — ZP-AP

HEAT TREAT — FINISH

NAME BRACKET-CONTROLS - RUD. & EL. UPPER OUTBD. STA 60

CONSOLIDATED AIRCRAFT CORP. San Diego, Calif.

G — 28C5012

LET	ALTERATION	DATE	BY
A	ADDED DIMENSIONS	9-21-40	
B	ADDED TAB DIMENSIONS AT E		
	CHANGED DIMENSIONS A, E TO		
	SHOWN DRAWN UP	4-3-41	
C	ADDED 11/16 DIM.	4-10-41	
D	HOLE & NOTES ADDED @ E FOR -7L AND -7R WAS 3/16	4-24-41	
E	DIMENSIONS REMOVED	4-24-41	
F	AN 426 AD3 CSNK RIVETS WAS SET	4-29-41	
	CHGD F AND H (T-8.8-33 ADDED		
G	ADDED DIM C FROM FACE OF DWG. & IN NOTE — ADDED 1/16 IN PLACE OF TABULATED DIM. C	4-30-41	
H	ADDED HOLES & NOTES FOR -6 BOTTOM ONLY	4-29-41	
J	ALTERED DWG. TO USE -6TO-15 INCLUSIVE	7-1-41	
	DIM. C MADE IN DWG. PIECE BACK OF -6 -7		
K	ADDED 3/8 DIA. HOLE TO FACE OF DWG WITH DIMS.	8-15-41	

LET	ALTERATION	DATE	BY
L	CHGD TO ANGLE TO FIT SKIN DIM. CHGD B, A DIMS. ADDED DIM. A DIM.		
M	WAS .309" OR .8" - .312" OR .8" 4 - 11/16 "ST." WAS 2.9" WAS 2.9	5-24-41	
N	DIM. 1 1/16 WAS 3/16. ADDED NOTE "THESE ARE ONLY" NO WT. CHG.	5-28-41	
P	ADDED "IN -8 7/16 ONLY" TO NOTE "CUT 3/4 DIA. -1 HOLE" NO WT. CHG.	6-12-41	

E.O. 23362
E.O. 26020
E.O. 27480
E.O. 33641 PBY-5
E.O. 35527 PBY-5
E.O. A11908 PBY-5 & 28-5

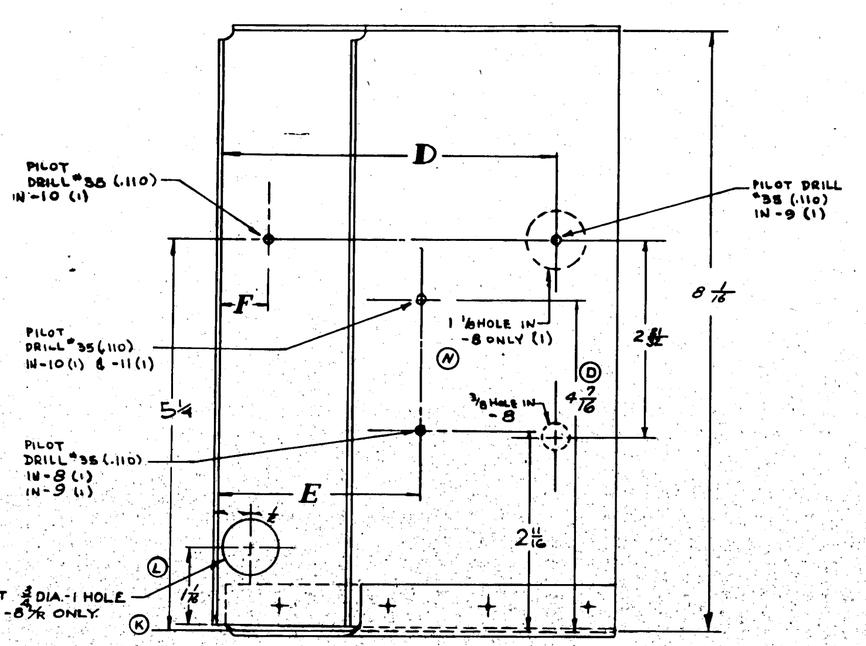

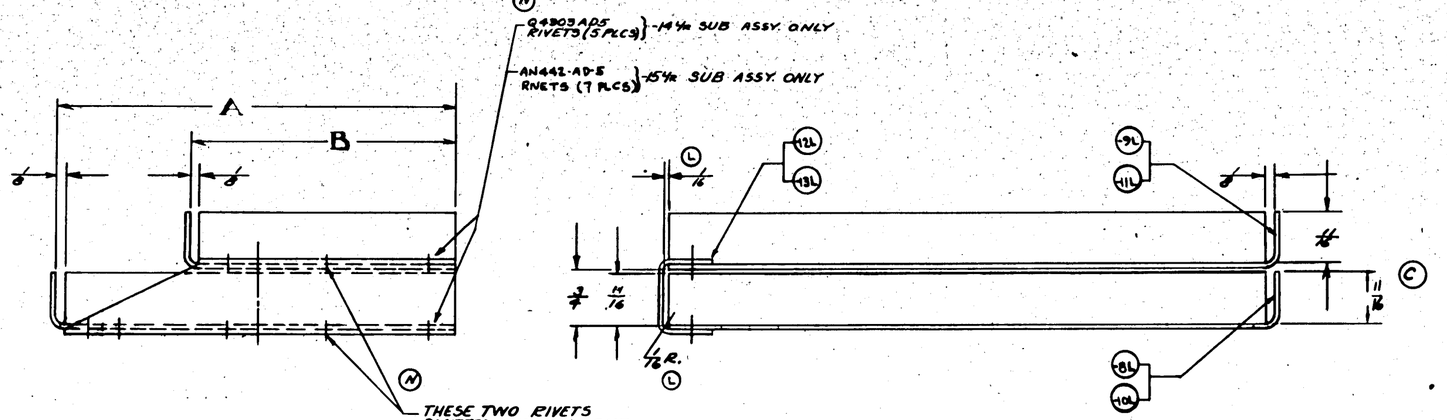

NOTE: ALL BEND RADII & RELIEFS 1/8 RAD. EXCEPT AS NOTED

DASH NO.	A	B	D	E	F
-8L -8R	5 3/32		4 3/32 +1/64 -0	2 3/32 +1/64 -0	
-9L -9R		3 5/32	4 3/32 +1/64 -0	2 5/32 +1/64 -0	
-10L -10R	5 9/16			4 5/16 +1/64 -.08	5 9/16 +1/64 -.08
11L -11R		3 3/8		4 5/16 +1/64 -.08	
12L -12R	5 11/32	3 11/32			
13L -13R	5 5/16	3 3/16			

FINISH CODE

Z	ANODIC TREATMENT
P	P-27 PRIMER
AP	ALUMINIZED PRIMER
C	CADMIUM PLATE

PART No	STOCK	MATERIAL	SPEC.	LN DW REQ -0	LN DW REQ -2	LN DW REQ -3	LN DW REQ -4	LN DW REQ -5
	AN442-AD5							
-13L	V-10-A4TT X 5 1/16							
-11L	.064 X 9 X 4 3/16	24ST AL. ALLOY	2024 Comb T	1				
-10L	.064 X 3 X 6 3/16	24ST AL. ALLOY	2024 Comb T	1				
-15L	SUB - ASS'Y							
	AN442-AD5							
-13L	V-10-A4TT X 5 1/16							
-11L	.064 X 9 X 4 3/16	24ST AL. ALLOY	2024 Comb T	1				
-10L	.064 X 3 X 6 3/16	24ST AL. ALLOY	2024 Comb T	1				
-15L	SUB - ASS'Y							
	Q4903-ADS							
-12R	V-10-A4TT X 5 1/16							
-9R	.064 X 9 X 4 1/16	24ST AL. ALLOY	2024 Comb T	1				
-8R	.064 X 3 X 8	24ST AL. ALLOY	2024 Comb T	1				
-14R	SUB - ASS'Y							
	Q4903-ADS							
-12L	V-10-A4TT X 5 1/16							
-9L	.064 X 9 X 4 1/16	24ST AL. ALLOY	2024 Comb T	1				
-8L	.064 X 3 X 8	24ST AL. ALLOY	2024 Comb T	1				
-14L	SUB ASS'Y							
-15R	SUB - ASS'Y							
-15L	SUB - ASS'Y							
-14R	SUB - ASS'Y							
-14L	SUB - ASS'Y							

PARTS LIST PER ASSY.

ASSY DASH NO.	MODEL	NEXT ASSY	QTY.
-15R	28C5015		1
-15L	28C5015		1
-14R	28C5015		1
-14L	28C5015		1
-13R	28C5014		1
-13L	28C5014		1
-12R	28C5013		1
-12L	28C5013		1
-11R	28C5012		1
-11L	28C5012		1
-10R	28C5011		1
-10L	28C5011		1
-9R	28C5010		1
-9L	28C5010		1
-8R	28C5009		1
-8L	28C5009		1

REQUIREMENTS PER AIRPLANE

REPLACES — CHGD. WT.

REPLACED BY — ACT. WT.

LIGHT LINE DIMENSIONS UNLESS OTHERWISE SPECIFIED ± 1/32 — SCALE 12" = 1'-0"

STAMP PART NUMBER WHERE SHOWN

AC — NAV — HEAT TREA — FINISH: Z-P

DRAFT	DESIGN	STRESS	MAT	PROD	ENG

NAME BRK'T - CONTROLS - RUD. & EL. STA 60 LOWER

CONSOLIDATED AIRCRAFT CORP. SAN DIEGO, CALIF.

CPP HAND 28C5015 B

SIZE G — DWG 28C5015

LET	ALTERATION	DATE	BY
J	REDRAWN & REVISED PER EO #A29708 WT. CHG. + E.C. [illegible]	[illegible]	
E	CHANGED MAT'L TO CARBON STEEL CABLE & SPEC TO AN-RR-C-43-4C-1 MAT WAS C.R. RESIST STEEL & SPEC. WAS 4BCII CL-B-MAT PER 8-3-70 WAS C.R. -M, -26, -28, -29, -32, -36 CARBON TINNED STEELE CABLE, SPEC AN-RR-C-43 WAS PREVIN'D STL. CABLE, SPEC-2SCC6, CL-B IN NOTE NO 1 "RATED STRENGTH" WAS "RATED LOAD" NEG. WT. CHG.	[illegible]	

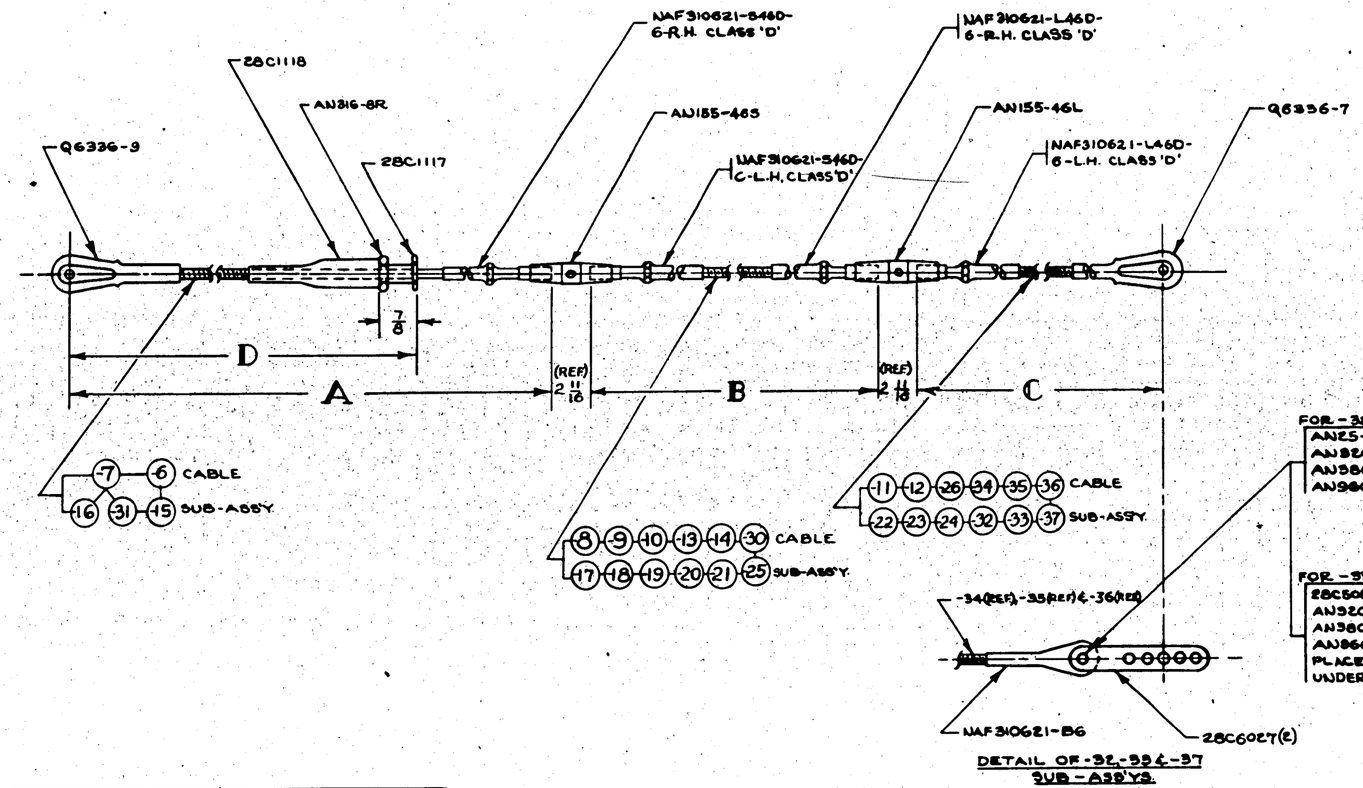

ASS'Y NO	NAME	A	B	C	D
-0	EL. UP-PORT	64 1/8	485 5/16	76 3/4	32 1/8
-2	EL. UP-ST'B'D	64 1/8	487	76 3/4	32 1/8
-3	EL. DOWN	63 3/8	466 1/2	98 3/4	31 1/4
-4	EL. DOWN	63 3/8	435 5/16	98 3/4	31 1/4
-5	EL. UP-PORT	63 3/8	456 1/16	76 3/4	32 1/8
-55	EL. UP-ST'B'D	63 3/8	457 1/8	76 3/4	32 1/8
-57	EL. UP-ST'B'D	64 1/8	487	76 3/4	32 1/8
-58	EL. DOWN	63 3/8	466 1/2	98 3/4	31 1/4
-59	EL. DOWN	63 3/8	435 5/16	98 3/4	31 1/4
-61	EL. UP-ST'B'D	63 3/8	457 1/8	76 3/4	32 1/8

NOTES:

1. PRE-STRETCH CABLE ASS'Y. TO 60% RATED STRENGTH (2520#).
2. CABLES TO BE COATED WITH PARALKATONE SPEC. RM-61 TYPE 'B' AS PER SPEC. 8R15C.
3. DIMENSIONS SHOWN ARE WITH 3 THREADS EXPOSED AT TURNBUCKLES.

PART NO	STOCK	MATERIAL	SPEC	-0 REQ	-2 REQ	-3 REQ	-4 REQ	-5 REQ	-55 REQ	-57 REQ	-58 REQ	-61 REQ
Q6336-9												
Q6336-7												
NAF310621-546D-	6 L.H. CLASS 'D'											
NAF310621-L46D-	6 L.H.											
NAF 310621-5460-6RH												
NAF 31D621-L46D-6RH CLASS 'D'												
NAF 310621-B6												
AN960-516L				4								
AN380-816												
AN380-CE-2												
AN316-8R												
AN320-5												
AN2514												
28C6027				2	2	2	2	2	2	2	2	2
28C5087												
28C1118												
28C1117												
-36	1/16 x 7 x 19 = 74											
-35	3/16 x 7 x 19 = 266											
-34	x 74											
-30	x 456											
-26	x 78											
-14	x 530											
-13	x 520											
-12	x 88											
-11	x 76											
-10	x 500											
-9	x 515											
-8	x 515											
-7	3/16 x 7 x 19 x 64											
-6	3/16 x 7 x 19 x 64											
MAT NO	STOCK	MAT	SPEC									
PARTS ON SUB-ASS'YS												
-61	28-5 AMW	28C5750	/									
-59	28-5 AMN	28C5750	2									
-58	28-5 MN	28C5500	2									
-57	28-5 MN	28C5500	/									
-55	28-5 MC	28C5700	/									
-4	28-5 AMC	28C5750	2									
-3	28-5 MC	28C5500	2									
-2	28-5 MC	28C5500	/									
-0	28-5 MC	28C5500	2									
-2	28-5 ME	28C5600	/									
-0	28-5 MA	28C5500	2									
-2	28-5 MA	28C5500	/									
-58	PBY-5B	28C5500	2									
-57	PBY-5B	28C5500	/									
				AN155-46S								
				AN155-46L								
-61	PBY-5A	28C5684	/									
-59	PBY-5A	28C5641	2									
-55	PBY-5A	28C5700	/									
-5	PBY-5A	28C5700	/									
-4	PBY-5A	28C5720	2									
-58	PBY-5	28C5000	2									
-57	PBY-5	28C5000	/									
-3	PBY-5	28C5000	2									
-2	PBY-5	28C5000	/									
-0	PBY-5	28C5000	/									
				-57 SUB-ASS'Y								
				-31								
				-32								
				-31								
				-25								
				-24								
				-23								
				-22								
				-21								
				-20								
				-19								
				-18								
				-17								
				-16								
				-15 SUB-ASS'Y								
PARTS LIST PER ASS'Y.				0	2	3	4	5	55	57	58	61

C-13995 & C-88476
C-70496 & C-77713
C-91876
C-70486

ASS'Y DASH NO	MODEL	NEXT ASS'Y	REQ
REQUIREMENTS PER AIRPLANE			

REPLACED 28C5017 (5-30-41)
REPLACED BY
SCALE NONE
STAMP PART NUMBER WHERE SHOWN

A C
NAVY NONE
HEAT TREAT
NOTED
FINISH
DRAWING C.H.
DRAFT
CHECK
STRUCT
MAT
APPROV.
ENG
OPP HAND
DWG G
SIZE
28C5017
NAME CABLE ASSEMBLY ELEVATOR CONTROL
CONSOLIDATED AIRCRAFT CORP. SAN DIEGO CALIF

R 28C5017

LET	ALTERATION	DATE	BY
A	REVISED & REDRAWN	3-21-40	
B	INSTALLED CATCH 28C5041 WITH THE FLANGE POINTING INWARD INSTEAD OF OUTWARD; CHANGED LOCATION DIM. FROM 5/32 TO 1/8.	3-17-41	
C	ON DWG & B.M. AN526-D1032-7(6) & AN365 D1032 (6) WERE AN442-D4	4-21-41	
D	ON DWG Q5105-7 WAS AN526 [illegible]; ADDED: DRILL #10 HOLES (2). NOTE 4 PLACES WAS 6. B/M [illegible] (4) WAS (6) ADDED Q5105-D10-7 (2)	5-16-41	
E	CHANGED AN4 DD6A TO AN525-D416-12 ON DWG & B/M	6-13-41	
F	CREATED -2 ASSY. NEG. WT. CHG.	2-19-42	
G	REMOVED FROM -2 ASS'Y 28C5040 (1); 28C5041 (1) & -6 (1). WT. CHG. NEG.	1-12-43	
H	IN REQS/AIR, -2 ASSY-LIMITED PBY-5, CONT. #91876 TO #31 TO MCR 101-A & PBY-5A CONT. NO. 464 MCR 203-1 TO MCR 203-A, WAS MCR 203-1-ON. NO WT. CHG	4-12-43	

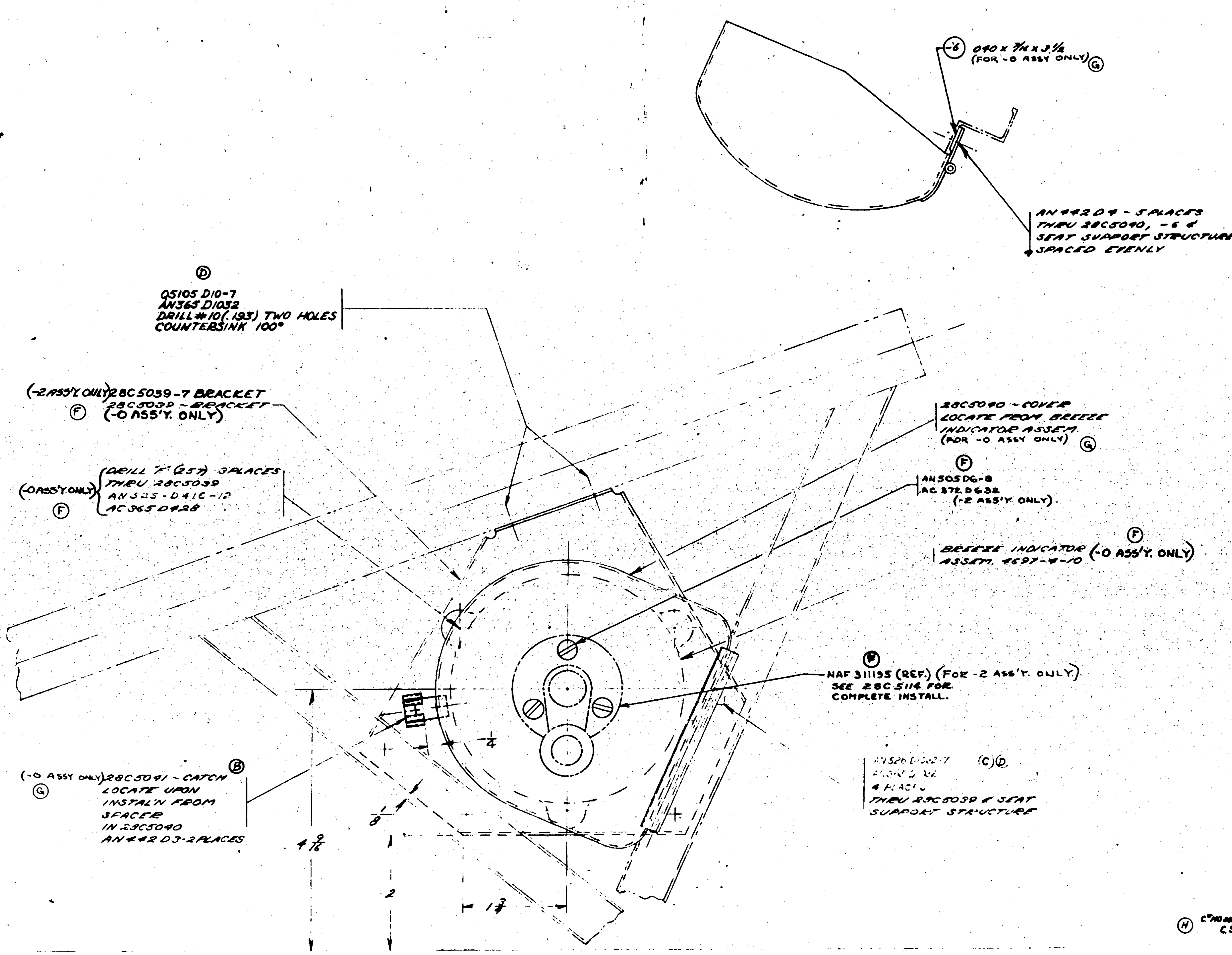

ASSY. DASH NO.	MODEL	NEXT ASSY.	NO.
-2	PBY-5A	28C5102	1
-2	PBY-5	28C5102	1
	PBY-5A	28C5564	1
	PBY-5	28C5086	1
	PBY-5A	28C5700	1
	PBY-5	28C5000	1

(H) C. NO. 464, MCR 203-A TO MCR 203-A; C. 91876 #31 TO MCR 101-A; C. # 88476; C. # 91876-#1-30; C. # 70496 & 77713; C. # 70496

REQUIREMENTS PER AIRPLANE

REPLACES 28C5022 OF 11-21-39 | CALC. WT.
REPLACED BY | ACT. WT.
LIMIT ON DIMENSIONS UNLESS OTHERWISE SPECIFIED ± 1/32 | SCALE 12" = 1'0"
STAMP PART NUMBER WHERE SHOWN

PART No	STOCK	MATERIAL	SPEC.	REQ. -0	REQ. -2	REQ. -3	REQ. -4	REQ. -5
BREEZE INDICATOR ASSEM.				1				
AN526 D1032-7				4	4			
AC365-D1032				6	6			
AN442 D4								
AN442 D3								
Q5105D10-7				2	2			
AC365D428				3				
AC525-D416-12				3				
AN505-DG-8					3			
AC372D632					3			
28C5041				1				
28C5040				1				
28C5039				1				
28C5039-7					1			
-6	.040 x 7/16 x 3 1/2	AL ALLOY SHEET 24ST	ANNO COND T	1				

PARTS LIST PER ASSY.

Z	ANODIC TREATMENT
P	P-27 PRIMER
AP	ALUMINIZED PRIMER
C	CADMIUM PLATE

A.C		DRAFT	CHECK	STRUCT	MAT	APPROV	ENG
NAVY NONE	-6 Z-P	3-21-40					
HEAT TREAT	FINISH						

NAME INSTAL'N - CONTROLS A.F.C. SETTING DEVICE

CONSOLIDATED AIRCRAFT CORP. SAN DIEGO, CALIF.

OPP. HAND

DWG. SIZE G — 28C5022

LET	ALTERATION	DATE	BY

LET	ALTERATION	DATE	BY
A	PART MADE 2 PIECES - -6 & -7	8 JAN 42	JR
B	BOTTOM OUTLINE REVISED	-	-
C	NOTCH ADDED	-	-
D	1/8 DIA HOLE CUTOUT ADDED	7/10/42	[illegible]
E	CUTOUT ADDED TO PROVIDE FOR [illegible]	[illegible]	[illegible]
F	[illegible] WAS 1/16, 1/8 WAS DIA CUT CORNER ON DETAIL IS NOW 3/4 TRUE.	[illegible]	[illegible]
G	ADDED DIMENS. 1/8, 3/16 & 1/2 CHG'D. VIEWS TO CONFORM. NOT. CHGS. MCS.	4-5-42	[illegible]
H	5/16 R. & 1/8 DIMS. WERE 1/8 DIA HOLE. NO NT. CHG.	4-30-42	[illegible]

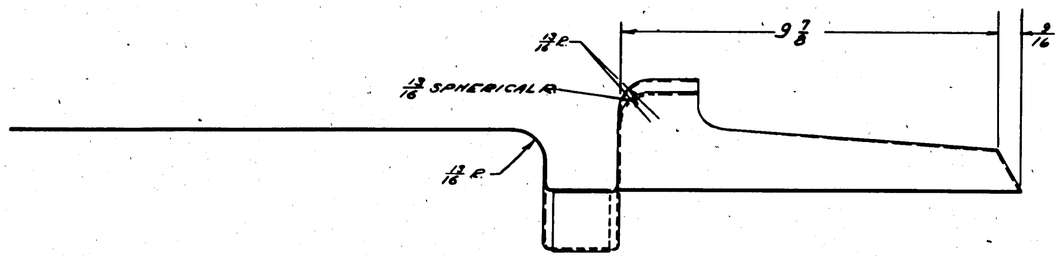

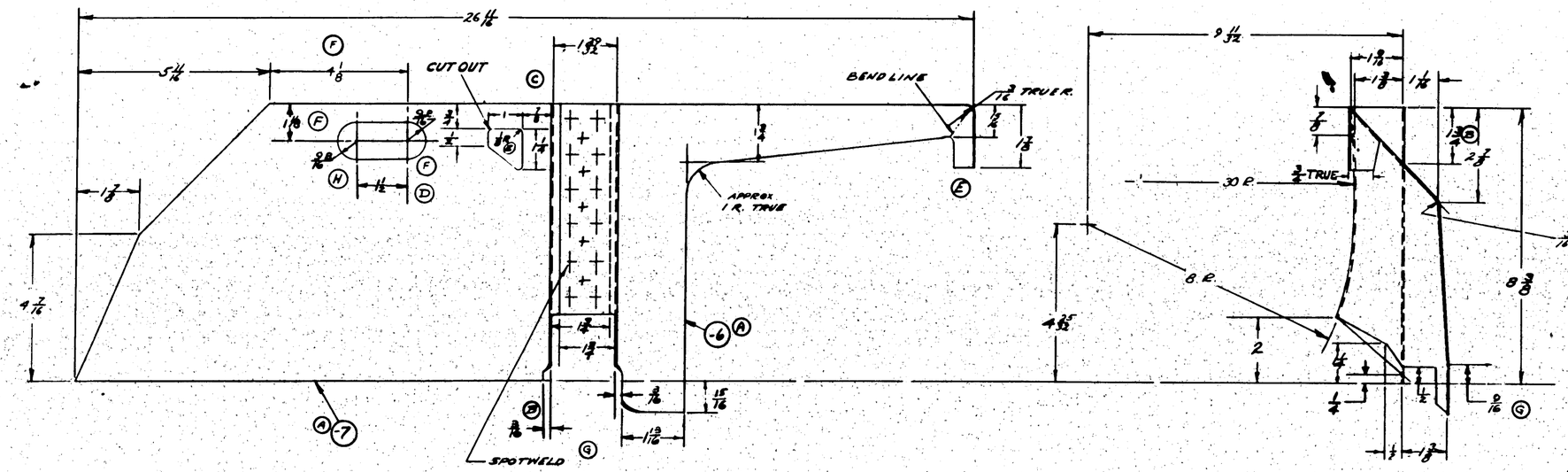

NOTE:
ALL RADII 1/16 R UNLESS OTHERWISE NOTED

GP-GREEN PRIME
PINISH 600E
Z [illegible]
P [illegible]
ALP [illegible]
C CADMIUM PLATE

PART No.	STOCK	MATERIAL	SPEC.	Lot Size REQ. -0	Lot Size REQ. -2	Lot Size REQ. -3	Lot Size REQ. -4	Lot Size REQ. -5
-1	040 x 1 3/8 x 24	[illegible]	47A8 COND A					
-2	040 x 1 3/8 x 24	[illegible]	47A8 COND A					

PARTS LIST PER ASSY.

-0	BBY-50	28C503X	1
-0	BBY-5	28C503X	1
LAST DASH No.	MODEL	NEXT ASSY.	REQ.

REQUIREMENTS PER AIRPLANE

REPLACES

REPLACED BY

Scale 1/32 | Scale 3" = 1'0" | Dwg. Wt.

STAMP PART NUMBER WHERE SHOWN

A.C. | 3855 NAVY [illegible] | Z-P-GP | HEAT TREAT | FINISH | DRAFT | CHECK | STRUCT | MAT | [illegible]

NAME PLATE-A.F.C. COVER-OUTBD

CONSOLIDATED AIRCRAFT CORP. SAN DIEGO, CALIF.

OPP. HAND | SIZE G | DWG. NO. 28C503X3

LET	ALTERATION	DATE	BY
A	CUTOUTS ADDED	8-16-54	AP
B	HOLES ADDED	"	"
C	ADDED FORMED GROOVE	8-6-54	ACVA
D	ADDED CUTOUT E-7 TO FACE OF DWG	11-22-54	
E	REMOVED 5 7/16 DIM	11-22-54	
F	REMOVED 1/16 & 5/8 DIMS. - ADDED 3 5/16 & 8 1/2 DIM.	11-29-54	
G	REMOVED -7 & CUTOUT IN -6 FOR -9, ADDED 8 5/16 LNGH -2 ASSY TO INCLUDE -7 & -8, A139 ADDED FORMED GROOVE IN -6	12-14-54	
H	CUTOUTS ADDED	12-14-54	AP
J	IN BAY A FACE 28C5034-6 WERE 28C5034-6 & -7 REQ'D	12-14-54	
K	REMOVED 1/2 R, 1/4 DIM & FLANGE FROM SIDE VIEW. ADDED 1/8 R TO PLAN VIEW.	2-12-55	

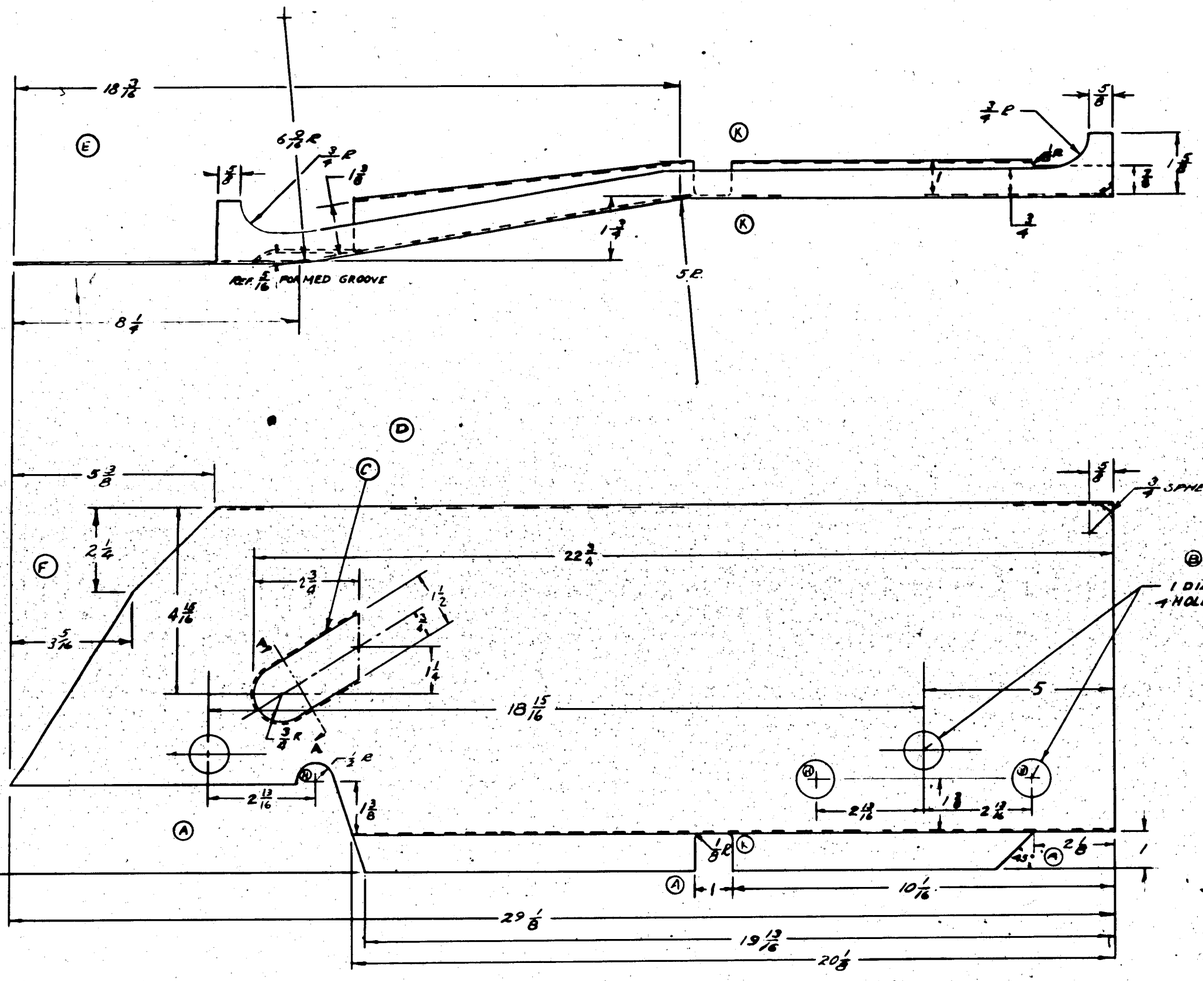

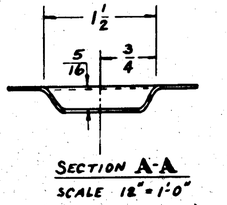

SECTION A-A
SCALE 12" = 1'-0"

NOTE:
ALL BEND RADII 1/8 R. UNLESS OTHERWISE NOTED.

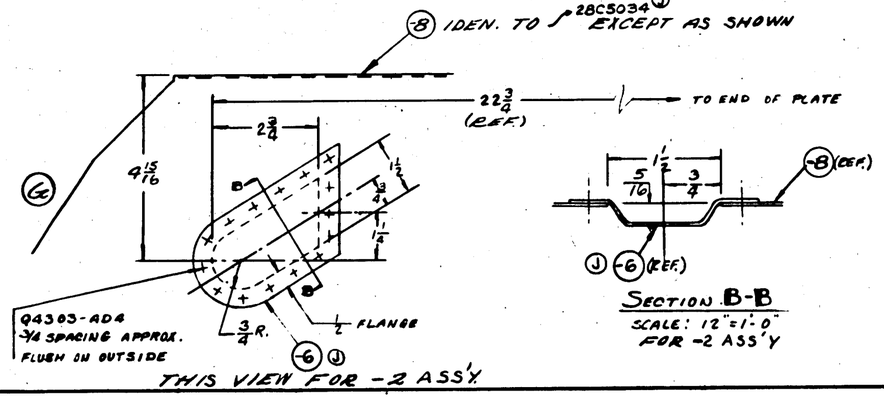

SECTION B-B
SCALE: 12" = 1'-0"
FOR -2 ASS'Y

NOTE~
SEAL-6 PLATE WITH ZINC CHROMATE PASTE. (J)

* -2 ASS'Y USED ON FIRST TEN SHIPS ONLY (G)

GP GREEN PRIME

FINISH CODE	
Z	ANODIC TREATMENT
P	A-37 PRIMER
AP	ALUMINIZED PRIMER
C	CADMIUM PLATE

-0	PBY-5A	28C5030	1									
-2	PBY-5	28C5030	1									
-0	PBY-5	28C5030	1									
DASH NO.	MODEL	NEXT ASSY	REQ.									

REQUIREMENTS PER AIRPLANE

REPLACES — DRAWING NO.
REPLACED BY — ACT QTY

SHOT OR DIAGONAL UNLESS OTHERWISE SPECIFIED: 1/32
SCALE: 6"=1'-0"
STAMP PART NUMBER WHERE SHOWN

Q4303-AD4

PART No	STOCK	MATERIAL	SPEC.	LH REQ	RH REQ	LH REQ	RH REQ	LH REQ	RH REQ
28C5034-6	.040 X 17 X 34	AL. ALLOY ALCLAD 2024	47AB COND A						
-6	.040 X 6X 8	ALCL 2.49T							
28C5034 (G)	.040 X 17 X 34	AL. ALLOY ALCLAD 2024	47AB COND A	1					
PARTS LIST PER ASSY.				-0	-2	-3	-4	-5	

A.C. NAVY/AF/A SPECIFICATION — HEAT TREAT — FINISH

	DRAFT	ENGR	STRUCT	MAT	APPROV	ENG
	9-10-53					

NAME PLATE - A.F.C. COVER INB'D
CONSOLIDATED AIRCRAFT CORP. San Diego, Calif.

OPR. HAND
SPEC. G
DWG. 28C5034

E.O. "28191
E.O. 28210
B.O. 87481

LET	ALTERATION	DATE	BY	LET	ALTERATION	DATE	BY
A	CUTAWAY SLOT ADDED	11/10/41	BARNES				
B	CORNER CUTAWAY ADDED	11/14/41	BARNES				
C	ADDITIONAL CUTAWAY ADDED	11/18/41	BARNES				
D	2 HOLES 2 PLS ADDED DIM'S & [illegible]	11-19-41	SIMMONS				

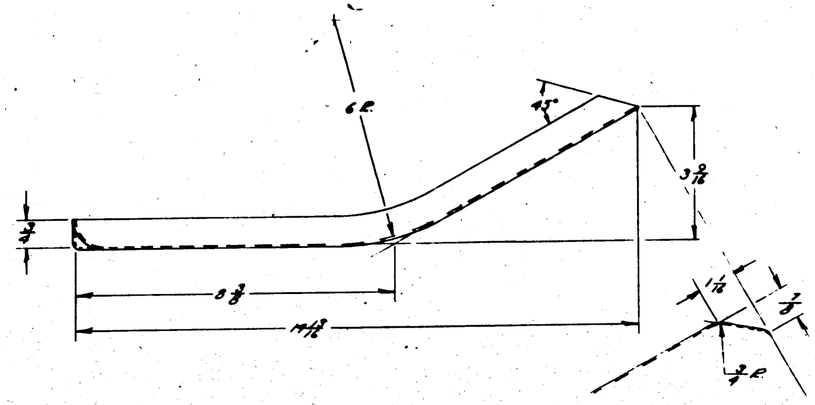

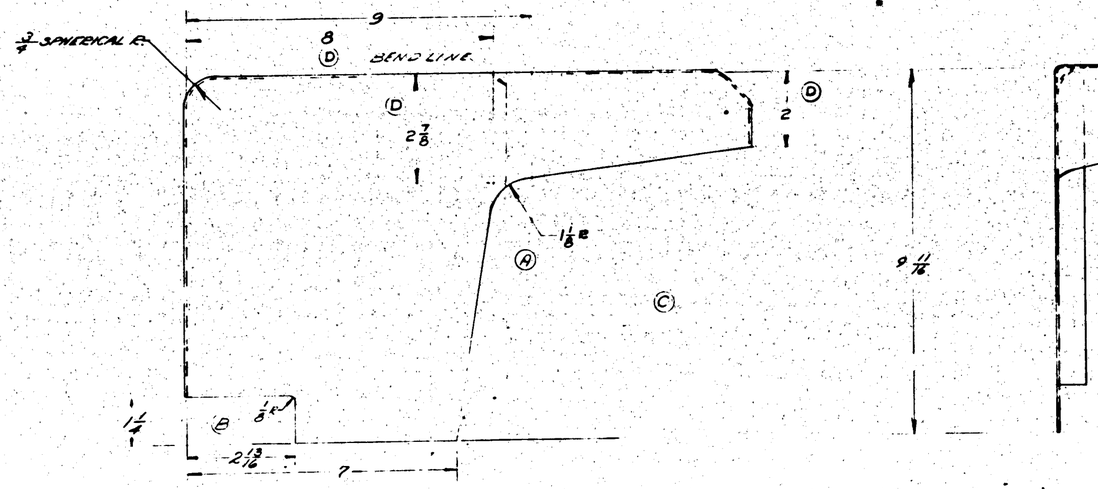

NOTE:
ALL RADII 1/8 UNLESS OTHERWISE NOTED

6P-GREEN PRIME

FINISH CODE

Z	ANODIC TREATMENT
P	A-17 PRIMER
AP	ALUMINIZED PRIMER
C	CADMIUM PLATE

ASSY DASH NO.	MODEL	NEXT ASSY	REQ'D
	PBY-5A	28C5080	1
	PBY-5	28C5090	1

REQUIREMENTS PER AIRPLANE

REPLACES — CANC. BY

REPLACED BY — ASY. NO.

LIST AS SUBASSEMBLY UNLESS OTHERWISE DIRECTED: 1/08

SCALE 6"=1'0"

STAMP PART NUMBER WHERE SHOWN

4 000 x 14 x 75 — ALCLAD 24ST — QQA-250/4

PART No	STOCK	MATERIAL	SPEC.	LH RH REQ	LH RH REQ	LH RH REQ	LH RH REQ	LH RH REQ
PARTS LIST PER ASSY.				-0	-2	-3	-4	-5

AC									
38 83		Z-P-2	3-18-42						
NAVY AFTER FORMING									
HEAT TREAT	FINISH	DRAFT	CHECK	STRUCT	MAT	ARMAM	ENG
					5/7/42		

NAME PLATE - A.F.C. COVER F'WD

CONSOLIDATED AIRCRAFT CORP., SAN DIEGO, CALIF.

OPP. HAND

DWG G

28C5035

LET	ALTERATION	DATE	BY

LET	ALTERATION	DATE	BY
A	S.N. 1311 CAL ACF	4-27-43	[illegible]
B	1481 HAS. SO	"	"
C	ADDED CORNER CUTOUT & DIM. "R" RE-DRLW FLANGE REMOVED BY ERROR	11-8-43	[illegible]
D	REMVD CUTOUT FROM DWG.	5-24-44	[illegible]

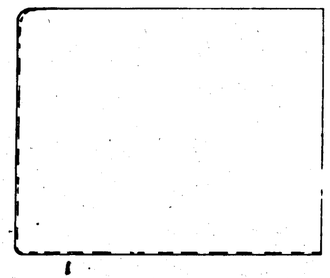

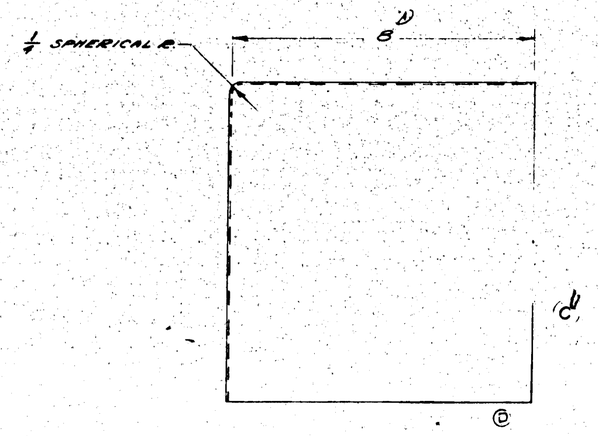

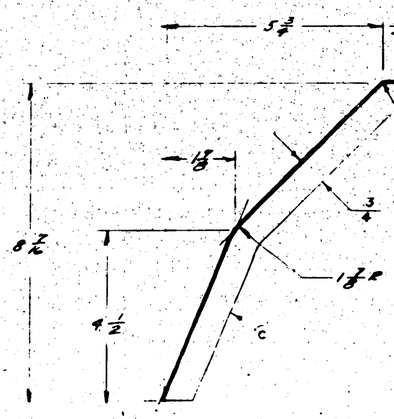

GP-GREEN PRIME

FINISH CODE	
Z	ANODIC TREATMENT
P	P-37 PRIMER
AP	ALUMINIZED PRIMER
C	CADMIUM PLATE

PBY-5A 28C5036 1
PB2Y-3 28C5036 1

ASSY DRAWING No.	MODEL	NEXT ASSY	REQ.

REQUIREMENTS PER AIRPLANE

REPLACES — CALC. WT.

REPLACED BY — ACT. WT.

LIST OF SUBSIDIARY DRAWINGS — SCALE 6"=1'0"

7/43

STAMP PART NUMBER WHERE SHOWN

PART NO.	STOCK	MATERIAL	SPEC	LH REQ -0	RH REQ -2	LH REQ -3	RH REQ -4	LH REQ -5	RH REQ

PARTS LIST PER ASSY.

A C / NAVY NONE	GP	5-10-43	[illegible]	[illegible]	[illegible]	[illegible]	[illegible]	[illegible]	[illegible]
HEAT TREAT	FINISH	DRAFT	CHECK	STRUCT	MAT	APPROV	ENGR.		

NAME PLATE - A.F.C. COVER AFT

CONSOLIDATED AIRCRAFT CORP. San Diego, Calif.

OPP HAND

SIZE G

28C5036

LET	ALTERATION	DATE	BY	LET	ALTERATION	DATE	BY
				A	ADDED NOTE "8½ APPROX. TO ℄ OF SHIP. LOCATE AT INST. OF A.F.C. UNIT." NO WT. CHGE	E.O. A40628	Bentley
				B	CREATED -2 ASS'Y IDENT. TO -0 EXCEPT FOR ADD'N OF 28C5092 & ATTACHING PARTS E.O. A40612		

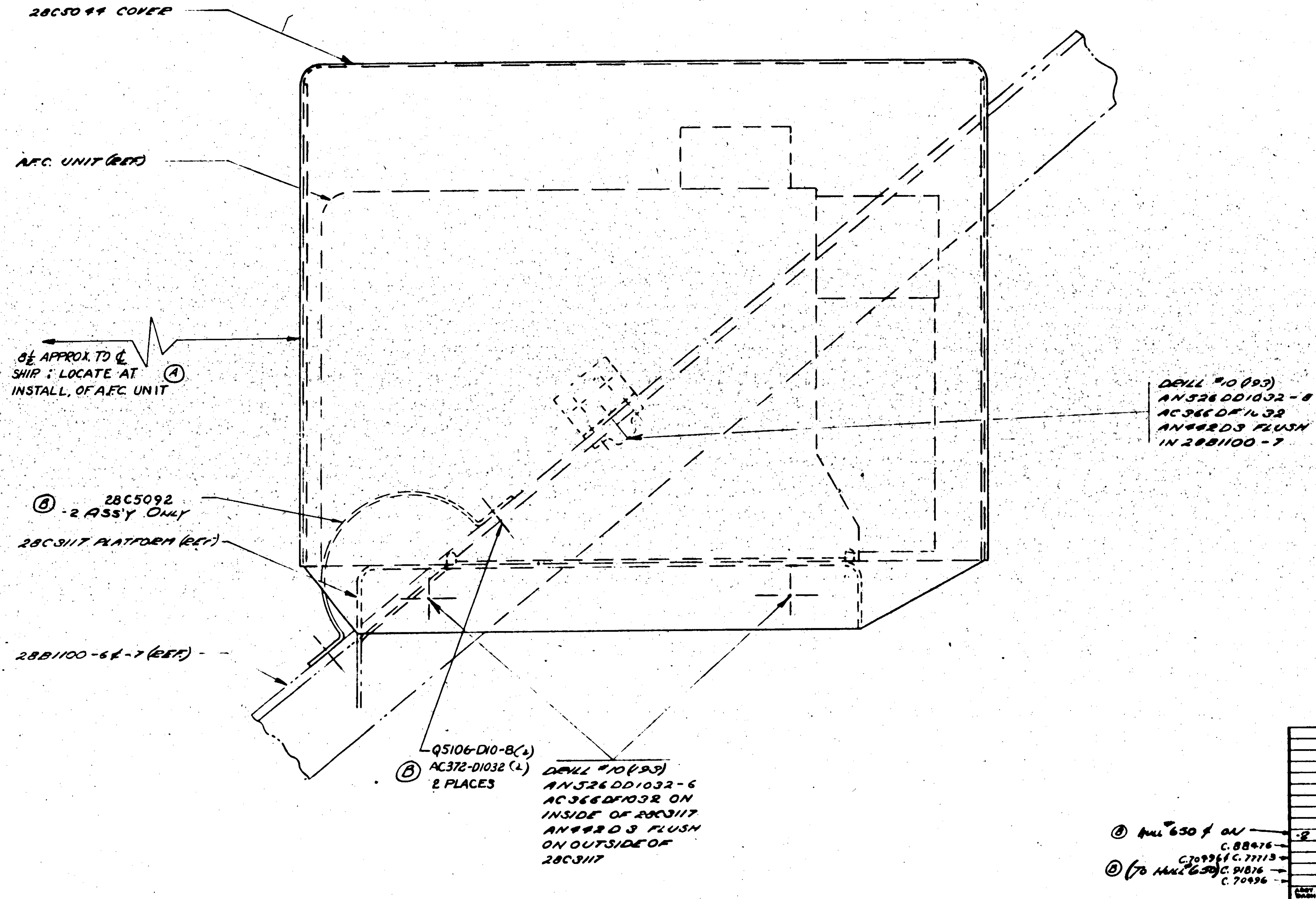

VIEW AFT AT BLKHD 1.0

ASSY DASH No.	MODEL	NEXT ASSY	REQ.	
-2	PBY-5	28C5086	1	(B) HULL #650 & ON
	PBY-5A	28C5569	1	C.88476
	PBY-5A	28C5710	1	C.70996 & C.77713
	PBY-5	28C5096	1	(B) (TO HULL #650) C.91876
	PBY-5	28C5000	1	C.70496

REQUIREMENTS PER AIRPLANE

REPLACES — CALC. WT.

REPLACED BY — ACT. WT.

LIMIT ON DIMENSIONS UNLESS OTHERWISE SPECIFIED ± 1/32 — SCALE 12" = 1'0"

STAMP PART NUMBER WHERE SHOWN

PART No.	STOCK	MATERIAL	SPEC.	-0 REQ.	-2 REQ.	-3 REQ.	-4 REQ.	-5 REQ.
Q5106-D10-8				—	2			
AC372D1032				—	2			
AN526DD1032-8				1	1			
AN526DD1032-6				2	2			
AN442D3								
AC366DF1032				3	3			
28C5044				1	1			
28C5092				—	1			

PARTS LIST PER ASSY.

A C						
NAVY NONE	NONE				5/2/40	
HEAT TREAT	FINISH	DRAFT	CHECK	STRUCT	MAT.	APPROV.	ENG.

NAME INSTAL'N COVER - RUDDER A.F.C. UNIT

CONSOLIDATED AIRCRAFT CORP. SAN DIEGO, CALIF.

OPP. HAND

DWG. SIZE G — 28C5093

R

LET	ALTERATION	DATE	BY	LET	ALTERATION	DATE	BY
A	RELEASE AFTER MOCK RELEASED WITH ADDED ALTS. REQD TO COMPLETE PART TO SAME SIZE AS OLD PATTERN						

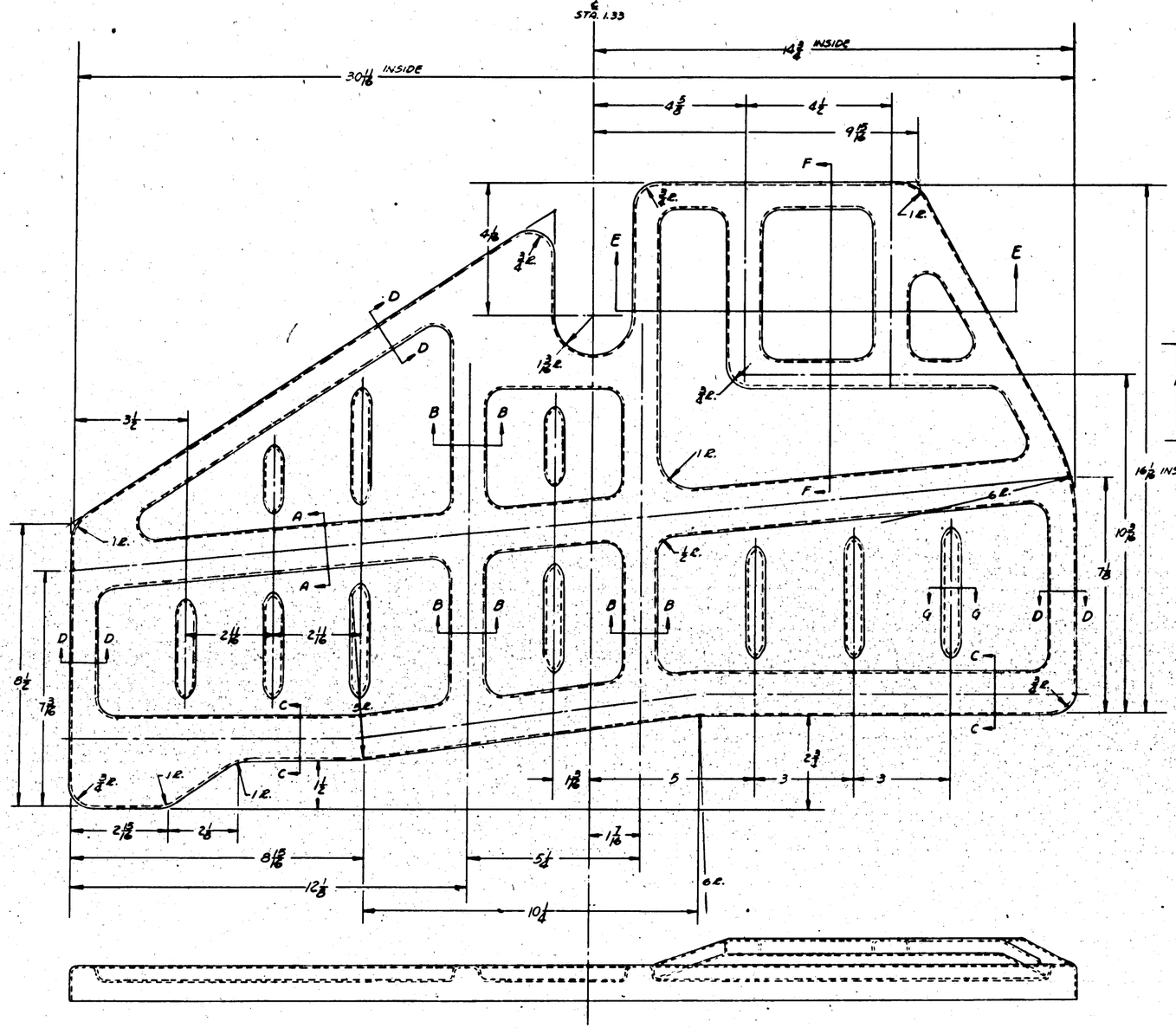

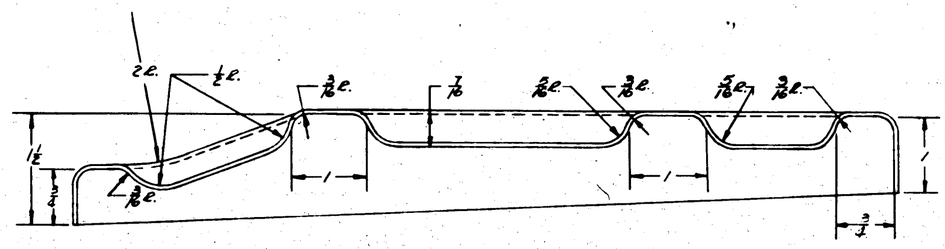

SECTION E-E

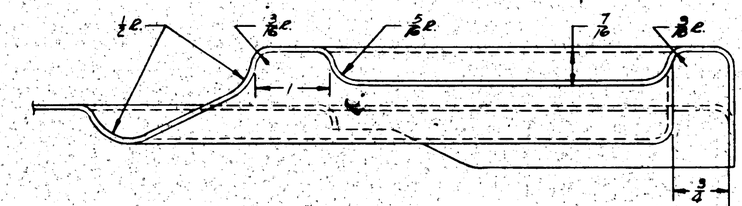

SECTION F-F

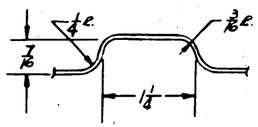

SECTION A-A

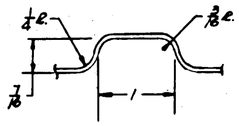

SECTION B-B

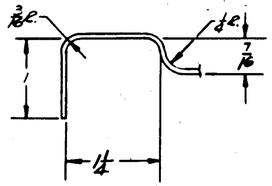

SECTION C-C

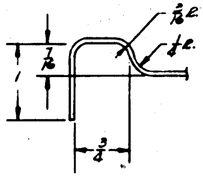

SECTION D-D

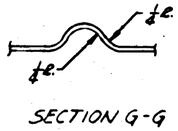

SECTION G-G

NOTE:-
1. PART IDENTICAL TO 28C3018-2 EXCEPT FOR OPENING.
2. ALL SECTIONS SHOWN FULL SIZE
3. RIVET SIZE & LOCATION SHOWN ON 28C5049

AGENCY DRAWING NO.	0A10 / NO-SA	28C5049 / 28C5049	1 / 1
	MODEL	PART ASSY.	REQ.

REQUIREMENTS PER AIRPLANE

REPLACES 28C3018-2 AF 5-17-27 — 2.189 SQ. FT. SHEET QTY.

REPLACED BY — ASY. QTY.

LIST OF SUPERSEDED DRAWING NUMBERS DESTROYED — SCALE 6" = 1'-0"

STAMP PART NUMBER WHERE SHOWN

PART No	STOCK	MATERIAL	SPEC.	LH	RH	LH	RH	LH	RH	LH	RH
				REQ.		REQ.		REQ.		REQ.	
PARTS LIST PER ASSY.				-0		-2		-3		-4	
	040-36-25	AC 8930	71AR CONSA								

A.C.							
NAVY 52-53	NONE	6-27-41	6-27-41		JCH		
HEAT TREAT	FINISH	DRAFT	CHECK	STRUCT	MAT	ENGR	ENG.

NAME TOP - CONT. - S.B.A.C. UNITS - PLATFORM

OPP HAND NONE

CONSOLIDATED AIRCRAFT CORP. SAN DIEGO, CALIF.

DWG G SIZE

28C5048

LET	ALTERATION	DATE	BY	LET	ALTERATION	DATE	BY

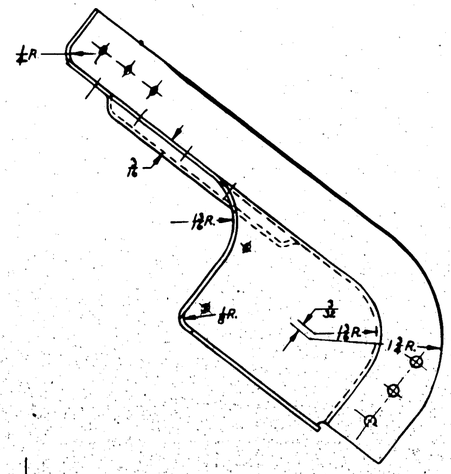

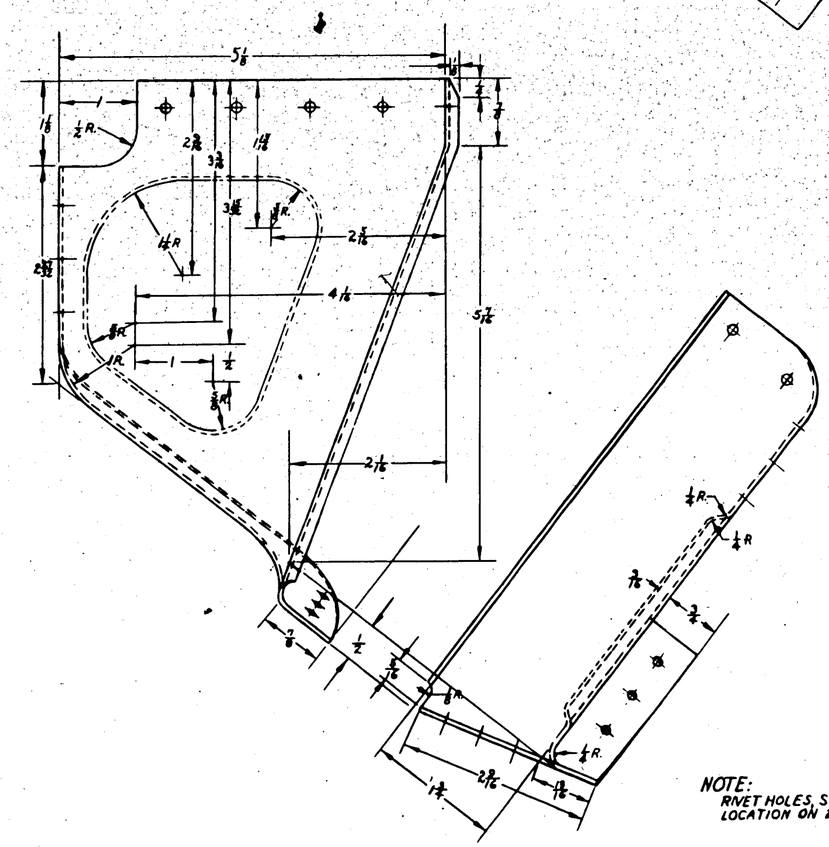

NOTE:
RIVET HOLES, SIZE & LOCATION ON 28C5047

FINISH CODE

Z	ANODIC TREATMENT
P	A-17 PRIMER
AP	ALUMINIZED PRIMER
C	CADMIUM PLATE

OA 10	28C5047	1	
PBY-5A	28C5047	1	
MODEL	NEXT ASSY.	REQ.	

REQUIREMENTS PER AIRPLANE

28C4018-3/6 6-8-38		EFFECTIVITY
REPLACED BY		ASSY. QTY.
SCALE 12"-1'0"		

STAMP PART NUMBER WHERE SHOWN

PART No	STOCK	MATERIAL	SPEC.	LH REQ.	RH REQ.	LH REQ.	RH REQ.	LH REQ.	RH REQ.	LH REQ.	RH REQ.
	PARTS LIST PER ASSY.			-0	-0	-3	-3	-4	-4		
	0.51/32 x 2 1/2	ALCLAD 24S-T3 AIR CORP. A		1	1						

A.C.		7-11-41					
NAVY SRS3-T	Z-P-AP	SPEC. NO.	7-53-A				
HEAT TREAT	FINISH	DRAFT	CHECK	STRESS	DAY	APPROV.	DATE
				CAP. NAVAIR		NAVY	

NAME BRACKET-CONTROLS-RUDDER MOTOR-AFC. PLATFORM-

CONSOLIDATED AIRCRAFT CORP. San Diego, Calif.

SIZE G — 28C5061

*2 & FUTURE

LET	ALTERATION	DATE	BY	LET	ALTERATION	DATE	BY

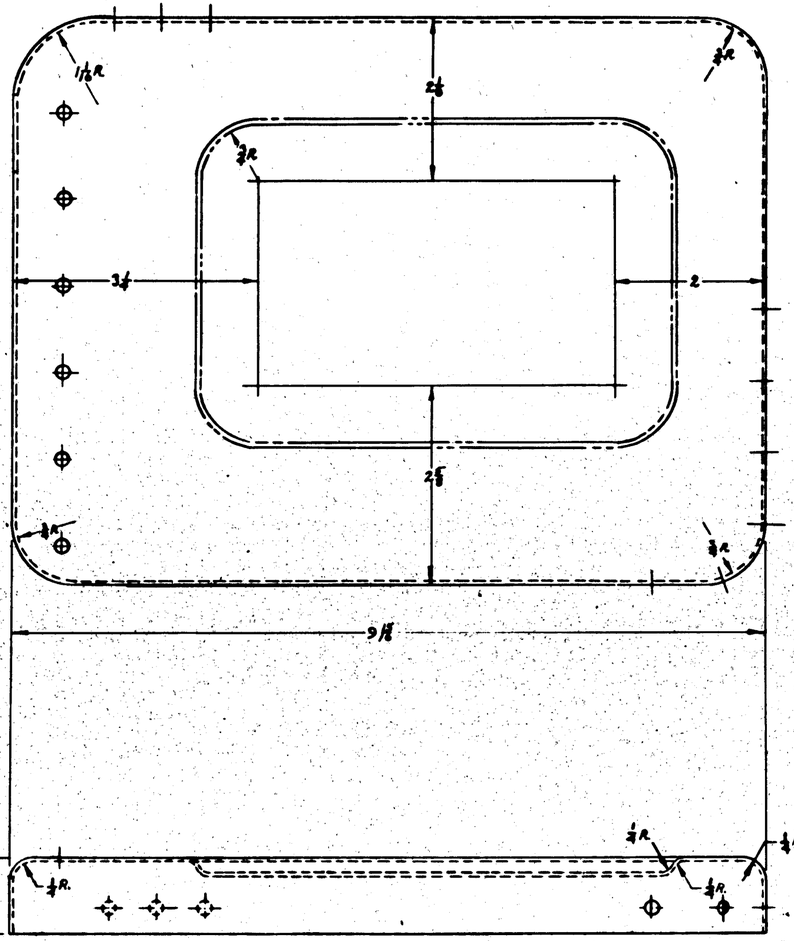

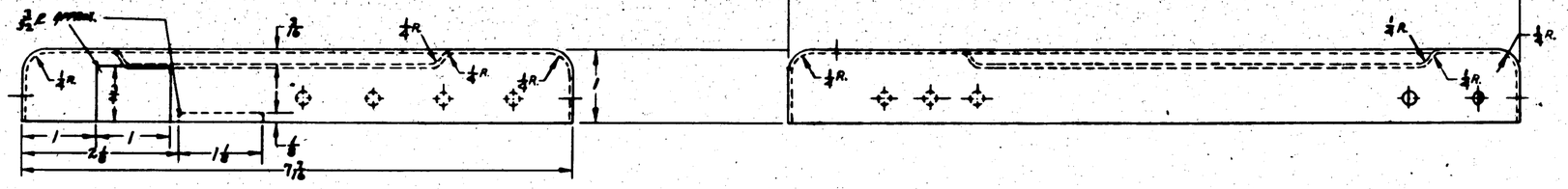

NOTE:
RIVET HOLES LOCATION & SIZE ON 28C5047.

*2 & FUTURE

FINISH CODE

Z	MOLY TREATMENT
P	A-17 PRIMER
AP	ALUMINIZED PRIMER
C	CADMIUM PLATE

CONT. NO.	MODEL	NEW ASSY.	INCL.
	OA10	28C5047	1
	PBY-5A	28C5047	1

REQUIREMENTS FOR AIRPLANE

RELEASED 28C5178-B 5-25-37	51* CHGE. NO.
DUPLICATED BY	ASY. NO.
LIST IN ENGINEERING RELEASE ORDER: 1/8in	SCALE 12"-10"
STAMP PART NUMBER, ENGINE SHOWN	

PARTS LIST FOR ASSY.

PART NO	STOCK	MATERIAL	SPEC.	LET. DIV. REQ. -0	LET. DIV. REQ. -2	LET. DIV. REQ. -3	LET. DIV. REQ. -4	LET. DIV. REQ. -5
	2024-T4 Alclad sheet	2024-T4 Alclad sheet	AN-QQ-A-250/4	1				

A.C.		7-16-37				
NAVY SAE 3 T	Z-P-AP	7-23-37				
HEAT TREAT	FINISH	DRAFT	CHECK	STRESS	ENG.	APPROV.

NAME PLATFORM-CONTROLS-A.F.C. RUDDER MOTOR

CONSOLIDATED AIRCRAFT CORP. SAN DIEGO, CALIF.

OPP. HAND: None

DWG. NO. 28C5071

SIZE G

LET	ALTERATION	DATE	BY	LET	ALTERATION	DATE	BY

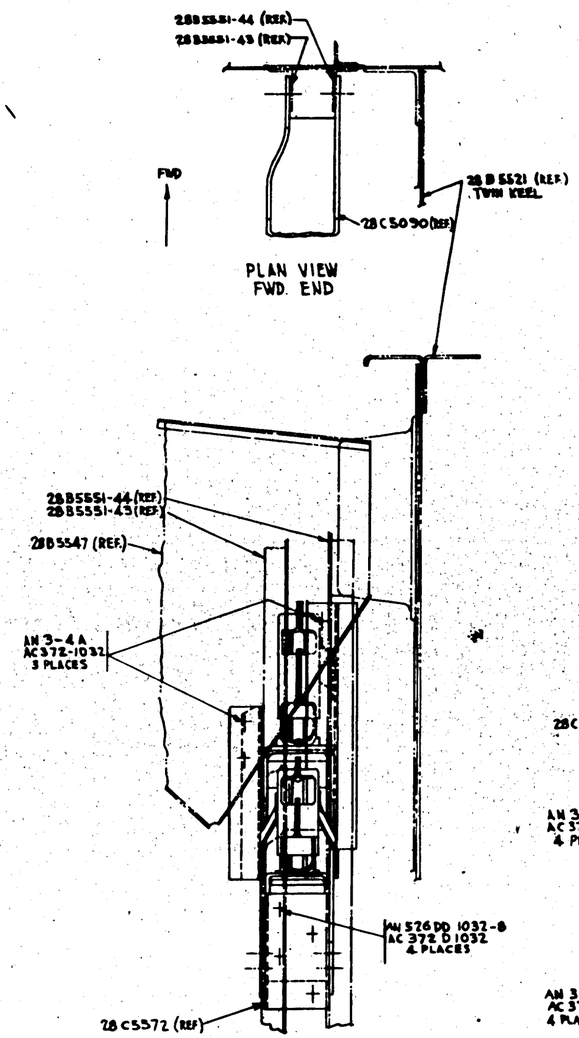

PLAN VIEW
FWD. END

VIEW LOOKING FWD

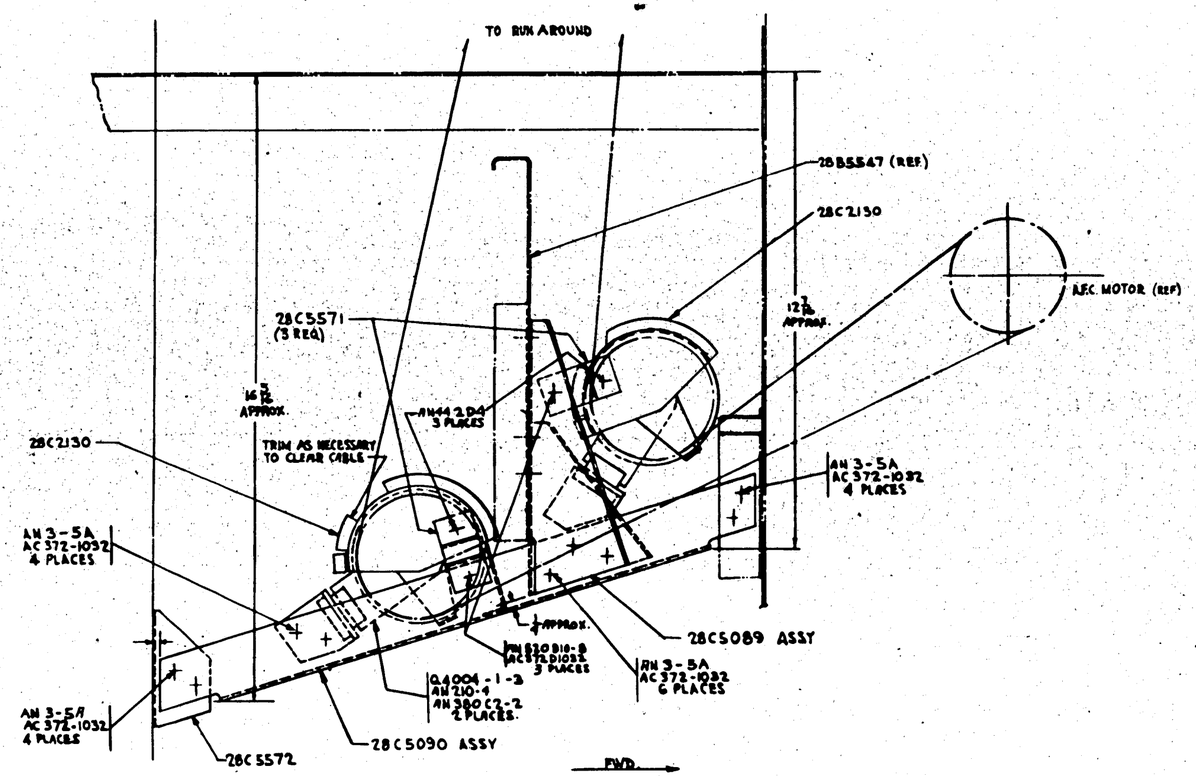

VIEW PORT SIDE LOOKING OUTB'D

FINISH CO'S	
Z	ANODIC TREATMENT
P	A-27 PRIMER
AP	ALUMINIZED PRIMER
C	CADMIUM PLATE

PART No	STOCK	MATERIAL	SPEC	LH REQ -0	RH REQ -2	LH REQ -3	RH REQ -4	LH REQ -5
AN4424D4								
AN3209-8						3		
AN 526DD-8						4		
AN 380C2-2						2		
AC372D1032						7		
AC372-1032						21		
AN 3-5A						10		
AN 3-4A						3		
AN 210-4						2		
Q4004-1-3						2		
28C5572				1				
28C5571				3				
28C5088				1				
28C5089				1				
28C2130				2				

PARTS LIST PER ASSY.

ASSY DASH NO	MODEL	NEXT ASSY	REQ
PBY 5A	28C5564		1
PBY 6A	28C5580		1

REQUIREMENTS PER AIRPLANE

REPLACES 28C5080 CALC QTY

REPLACED BY ADV QTY

LOCK ON DIMENSIONS UNLESS OTHERWISE SPECIFIED ON DRAWING	SCALE	STAMP PART NUMBER WHERE SHOWN
1/2	6"=1'-0"	

A C		5-28-42	
NAVY —	ZP	PASCO	4-7-42
HEAT TREAT	FINISH	DRAFT	CHECK STRUC MAT APPROV

NAME BRACKET INSTAL- CONTROLS - RUDDER A.F.C. PULLEYS

CONSOLIDATED AIRCRAFT CORP. SAN DIEGO CALIF.

UPP HAND

DWG G

28C5088

RUSH RELEASED 4-4-42

R 3

44

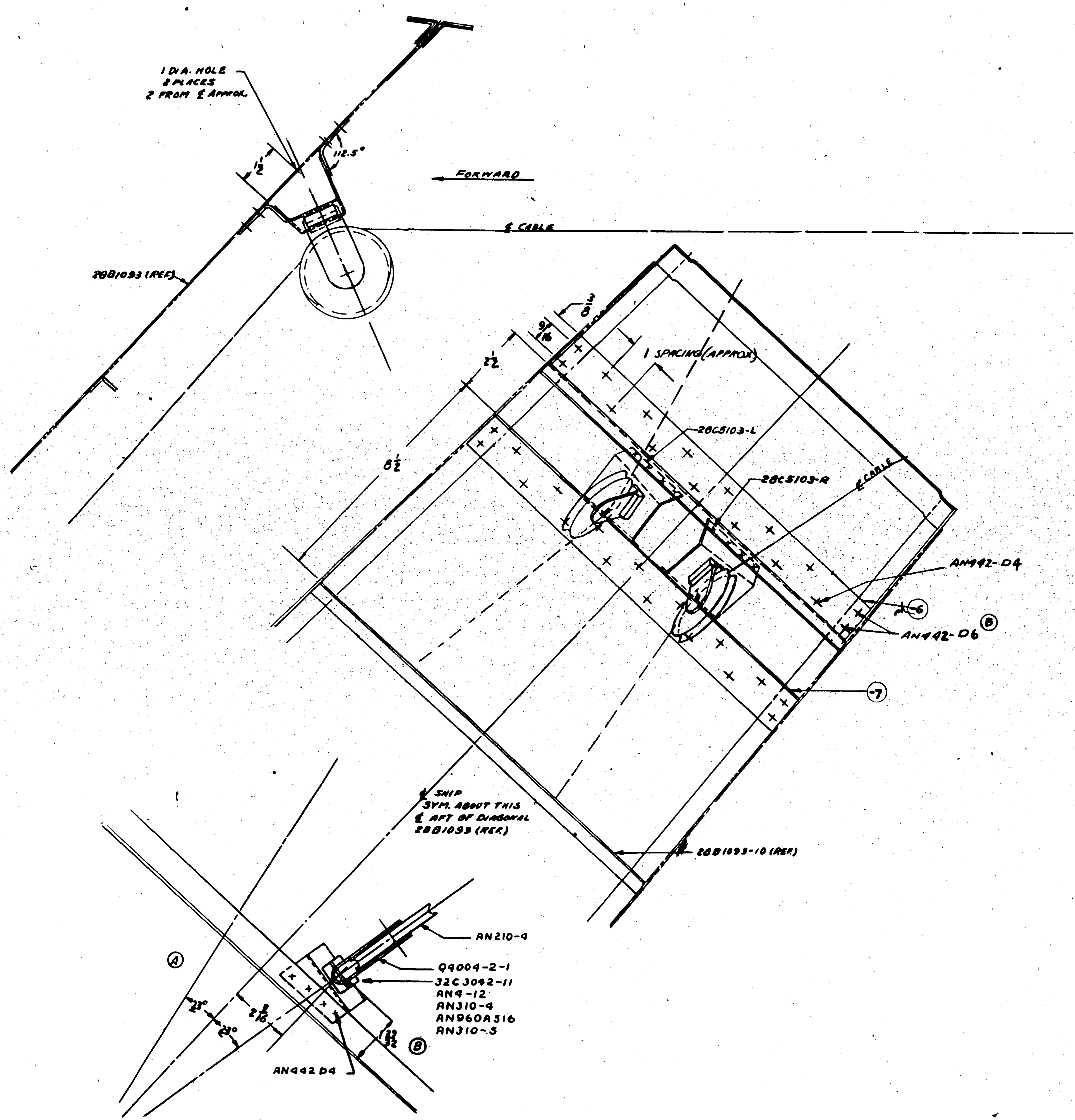

LET	ALTERATION	DATE	BY	LET	ALTERATION	DATE	BY
				A	E.O. 74686 23° WAS 11° (2 PLACES)	12-29-42	
				B	ADDED ⓑ ... CHGD.		
					AN442-D8 TO AN442-D6		
					CHGD. RIVET PATTERN TO 2		
					ROWS STAGGERED. CHGD.		
					MAT'L OF -6 & -7 FROM		
					K78F EXT. TO Y6A75T		
					CHGD. WGT FROM .78# TO		
					.91# FOR -0 ASSY.	11-24-43	

CHG. 23-1

ASSY DASH NO.	MODEL	NEXT ASSY	REQ.
-2	PBY-5	28C5086	1
-0	PBY-5	28B1093	1

REQUIREMENTS PER AIRPLANE

REPLACES | -0 .91# CALC. WT.

REPLACED BY | ACT. WT.

SCALE 1/32 | 6" = 1'0"

STAMP PART NUMBER WHERE SHOWN

PART No	STOCK	MATERIAL	SPEC.	-0 LH REQ.	-0 RH REQ.	-2 LH REQ.	-2 RH REQ.	-3 LH REQ.	-3 RH REQ.	-4 LH REQ.	-4 RH REQ.	-5 LH REQ.	-5 RH REQ.
32C3042-11						2							
AN960A516						2							
AN4-12						2							
AN310-5						2							
AN310-4						2							
AN210-4						2							
Q4004-2-1						2							
AN442-D4													
28C5103R				1									
28C5103L				1									
AN442D6													
-7	Y6A75TX15 1/4			1									
-6	Y6A75TX14 3/4			1									

PARTS LIST FOR ASSY.

[redacted]

A.C.

NAVY NONE | Z-P-GP

HEAT TREAT | FINISH

9/15/42 REED | DRAFT
MILLMAN | CHECK
STRUCT. | MAT. | APPR. | ENG. | ZUCK | MILLER

NAME INSTALL-CONTROL FIN RUDDER PULLEY

OPP. ... | G | 28C5104

CONSOLIDATED AIRCRAFT CORP. SAN DIEGO CALIF.

R

LET	ALTERATION	DATE	BY
A	ADDED -6L & R, -7L & R AND AN442-D5 WT CHG +.08#	9-26-43	KIRK
B	CHG'D Q9004-2-1 TO Q9004-0-1, W.T. CHG NEG.	2-17-44	[illegible]
C	ADDED LOCATING DIMS. (CAL. OUT OF NUMBERS) TO FACE OF DWG. NO WT CHG	3-23-44	[illegible]
D	ON FACE OF DWG. REMOVED -6L & -7L, 8 RIVET NOTES FOR ATTACHING -6L & -7L, 18 3/4 REMOVED -8L & R (K&O) X 2 1/8) & -7L & R (K6401 x 2 1/8) NO WT. CHG	5-17-44	HERRIN
E	G 1/2 DIM. WAS 7 1/4. NO WT. CHG.	8-30-44	[illegible]
F	ON FACE OF DWG. AN442-D5 (4 PLACES) WAS AN442-D4 (5 PLACES) WT. CHG NEG.	10-18-45	[illegible]

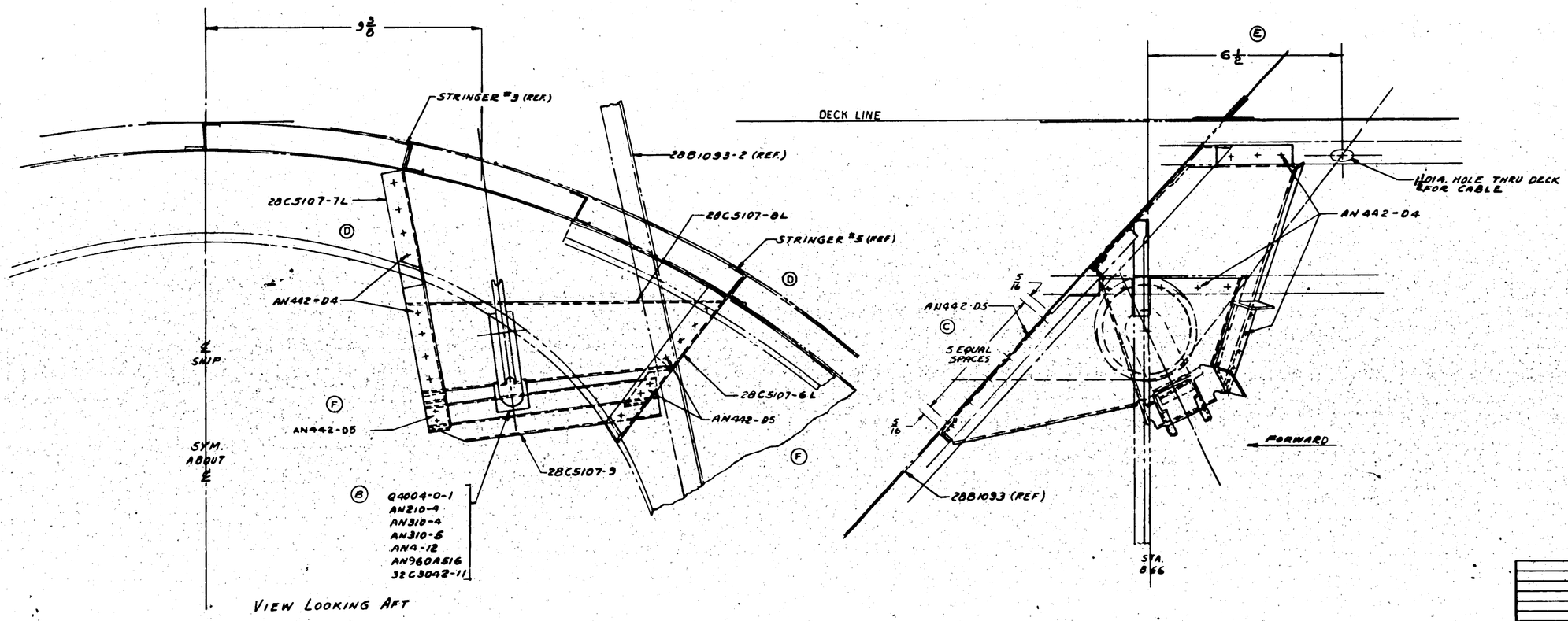

					32C3042-11
					AN960A516
					AN4-12
					AN310-5
-2R	PBY-5A	28C5568	/		AN310-4
-2L	PBY-5A	28C5569	/	MCR 178-15	AN210-4
-L	PBY-5A	28B5300	/		Q4004-0
2R	PBY-5	28C5086	/		AN442-D5
2L	PBY-5	28C5086	/	MCR 23-1	AN442-D4
R	PBY-5	28B6000	/		28C5107-9
L	PBY-5	28B6000	/		28C5107-8R
					28C5107-8L
					28C5107-7R
					28C5107-7L
					28C5107-6R
					28C5107-6L

PART NO.	STOCK	MATERIAL	SPEC.	LH	RH	LH	RH	LH	RH	LH	RH	LH	QTY
				REQ		REQ		REQ		REQ		REQ	
				-0		-2		-3		-4		-5	

PARTS LIST PER ASSY.

REQUIREMENTS PER AIRPLANE

REPLACES

REPLACED BY

SHOP QTY

ASSY QTY

LIST OR DRAWING SHOWING STANDARD DRAWING

SCALE 1/32 6" = 1'-0"

STAMP PART NUMBER WHERE SHOWN

A.C.

NAVY —

MATERIAL —

HEAT TREAT

FINISH

PULLMAN DRAFT CHECK STOCKT MAT ASSEM SHOP

NAME INSTALL:-CONTROLS B.F. #8.66 RUDDER CABLE.

CONSOLIDATED AIRCRAFT CORP. SAN DIEGO, CALIF.

DWG G

SIZE

OPP HAND 28C5106-R

28C5106

R 9015282

LET	ALTERATION	DATE	BY
A	REMOVED DIMS: 8 1/16, 6 3/16, 2 1/2, 11/16 & 2 3/4; ADDED DIMS: 6 1/16, 6 3/16, 1 9/32, 2 1/16 & 8 7/16. NO WT CHG.	10-1-42	Chas.
B	ADDED NOTCHES TO -8 & -9 PER WECHLMED 7/42/40	10-15-42	DELMORE
C	ON FACE OF DWG. CHG'D DIMS. OF -8 FROM 3 9/16 TO 3 7/16 (SHORT 2 3/4 TO 1 3/4). WT CHG 0.02	2-20-43	HARTMAN
D	ADDED SECTIONS "AA" & "B-B". NO WT. CHG.	6-12-43	HARTMAN
E	FOR -6 1/16 JOGGLE WAS 7/8 X 3/4 CUT, R.H. SIDE VIEW. DIMS. 1 3/16 (2 PLACES) WAS 1 (2 PLACES) 13/32 WAS 1, 2 3/16 WAS 2 3/4, 1 3/4 WAS 1 5/8, SEC. A-A 62° WAS 70°, SEC. B-B 67° WAS 75°. FOR -7: 1/16 JOGGLE WAS 7/8 X 3/4 CUT, CHG'D. SIDE VIEW TO AGREE & ADDED 10° & 20°. NEG. WT. CHG.	5-22-43	Jewett
F	DIM'S. 4 3/16 WAS 4 1/16 & 10 3/32 WAS 10 1/32. NO WT CHG.	8/24/43	Hartman

EDR 2236 MCR 178-15 MCR 23-1

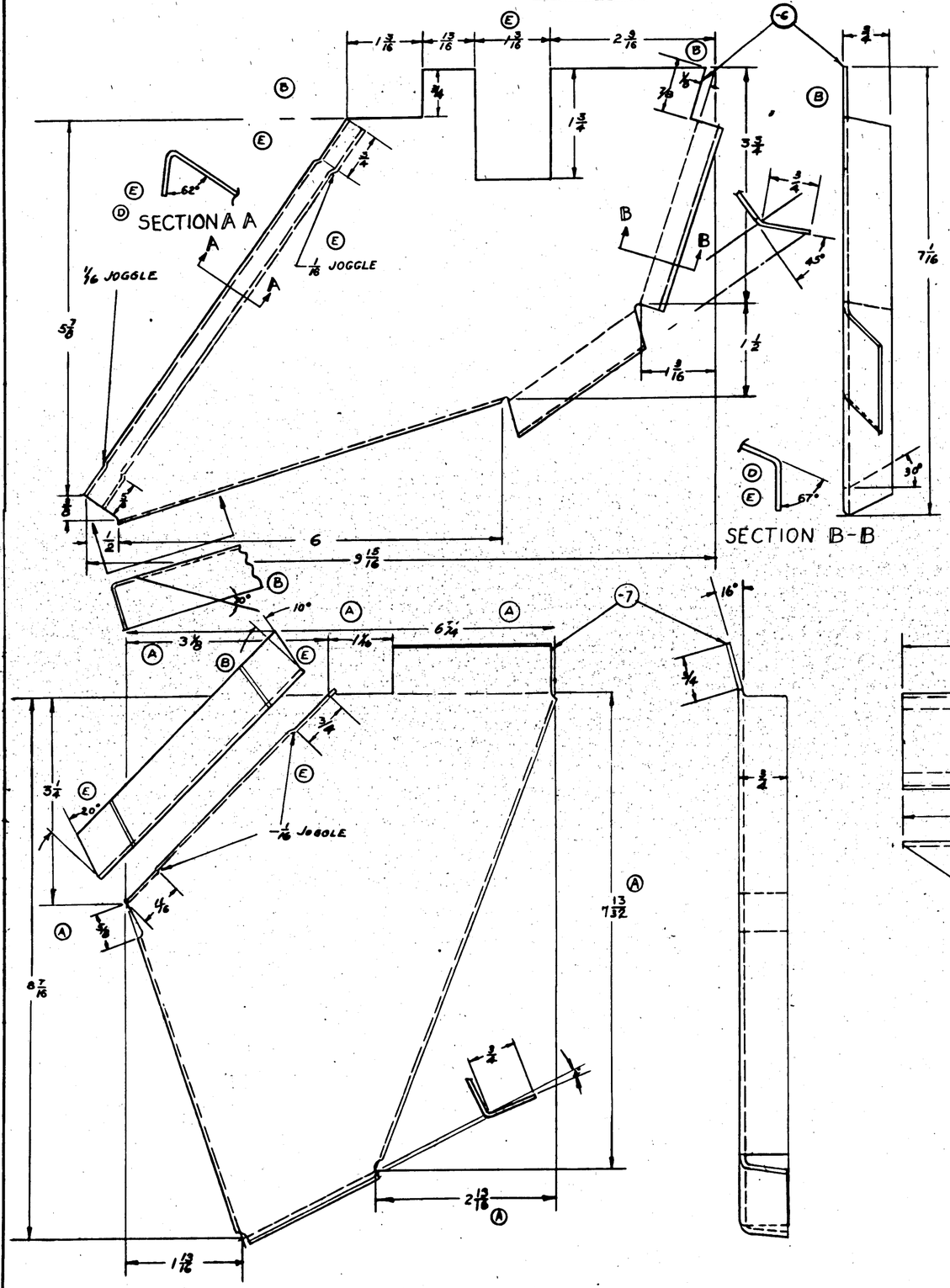

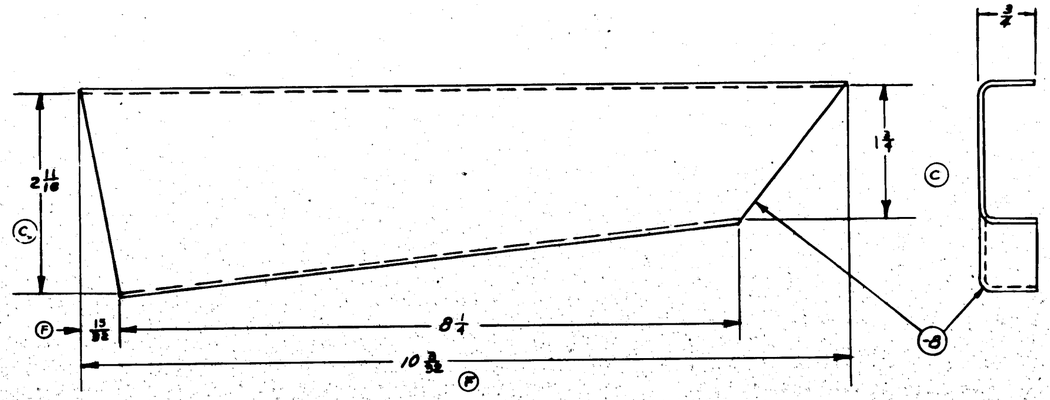

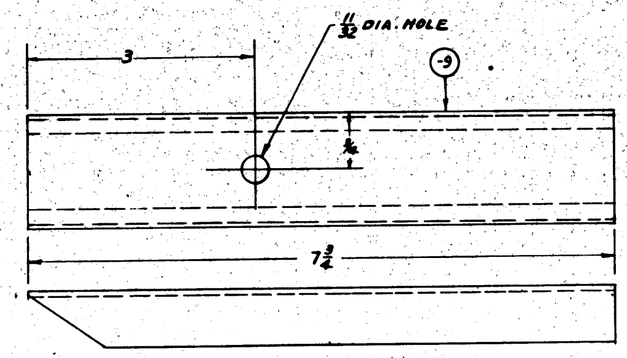

CALC. WTS.

-6 L & -6 R	.69 # EA
-7 L & -7 R	.95 # EA
-8 L & -8 R	.52 # EA
-9	1.6 #
	2.32

-5	PBY-5A	28C5106	2
-5R	PBY-5A	28C5106	1
-5L	PBY-5A	28C5106	1
-7R	PBY-5A	28C5106	1
-7L	PBY-5A	28C5106	1
-6R	PBY-5A	28C5106	1
-6L	PBY-5A	28C5106	1
-9	PBY-5	28C5106	2
-8R	PBY-5	28C5106	1
-8L	PBY-5	28C5106	1
-7R	PBY-5	28C5106	1
-7L	PBY-5	28C5106	1
-6R	PBY-5	28C5106	1
-6L	PBY-5	28C5106	1

ASSY DASH NO	MODEL	NEXT ASSY	QTY.
REQUIREMENTS PER AIRPLANE			
REPLACES		NOTED	
REPLACED BY		ASSY QTY.	

Lines on Reproduced Tracing Represent Drawing Details — SCALE 12" = 1'0" — 1/24

STAMP PART NUMBER HERE AS SHOWN

PART No	STOCK	MATERIAL	SPEC.	LH REQ.	RH REQ.	LH REQ.	RH REQ.	LH REQ.	RH REQ.	LH REQ.	RH REQ.
PARTS LIST PER ASSY.				-0	-2	-3	-4	-5			
-5	Y12-A25-TX7¾										
-8R	.040 X 12 X 6	ALCLAD	47AB-T								
-8L	.040 X 12 X 6	ALCLAD	47AB-T								
-7R	.064 X 12 X 11	ALCLAD	47AB-T								
-7L	.064 X 12 X 11	ALCLAD	47AB-T								
-6R	.064 X 12 X 8	ALCLAD	47AB-T								
-6L	.064 X 12 X 8	ALCLAD	47AB-T								

AC — NAVY — HEAT TREAT: 2P-GP — FINISH

DRAFT: Hartman 8/24/43 — CHECK — STRUCT. — MAT. — AIRWORK — ENG.

NAME: BRACKETS - CONTROLS RUDDER CABLE PULLEY

CONSOLIDATED AIRCRAFT CORP. San Diego, Calif.

OPP. HAND

DWG SIZE: G — 28C5107

R

LET	ALTERATION	DATE	BY	LET	ALTERATION	DATE	BY
[illegible]	[illegible] MCR 101-A [illegible] ... ADDED (1 REQ) [illegible] MCR 201-A & ON. NO WT. CHG	3-31-48	[illegible]	A	(Q5106-D10-8 & AC372-D1032 10PLACES) WAS (Q5106-D10-8 & AC372-D1032 6PLACES) & (Q5106-D8-8 & AC372-D832 4PLACES) NO WT. CHG	11/10/4[illegible]	BEACH
F	IN B/M, FOR -8, REPLACED "K78J X 10 5/8 AL. AL. EXT., 46A9-T," WITH "NOTED". FOR -9, REPLACED "K5401 X 9 5/8, AL. AL. EXT., 46A9-T," WITH "NOTED" ON FACE OF DWG. ADDED NOTES 2 & 3. IN AIR/REQ'TS BLK, [illegible] AIR/REQ'TS TO DATE. ADDED NOTE: "RELIEF RADII 3/32 (2 PLACES) WHEN USING .072 ALC." ADDED DIM. 3/16, 3/32 R (2 PLACES) & 1/8 (..) WT. CHG. NEG.	6-16-5[illegible]	NOBLE	B	ADDED AN210-2A & AN380-C2-2 WT. CHG. NEG.	11/10/4[illegible]	BEACH
G	IN B/M & ON FACE OF DWG. CREATED -2 ASSEM. WT [illegible]	7-13-5[illegible]	NOBLE	C	ON FACE: IN DETAIL OF -8 ADDED [illegible] ... IN DETAIL OF -9 [illegible] ... WT. CHG. NEG.	4-21-48	[illegible]
H	IN -0 ASSY., CHG. AN210-2A (1) TO AN210-1A (1). WT. CHG. NEG.	7-30-5[illegible]	NOBLE	D	ON FACE: TO DETAIL OF -8 ADDED 30° DIM. TO DETAIL OF -9 ADDED [illegible] DIM. & END VIEW. NO WT. CHG.	5-21-48	[illegible]
				E	IN REQ'S AIR. [illegible] C-[illegible] [illegible] MCR 10H [illegible] 10H-A [illegible]		

E.O. B21695

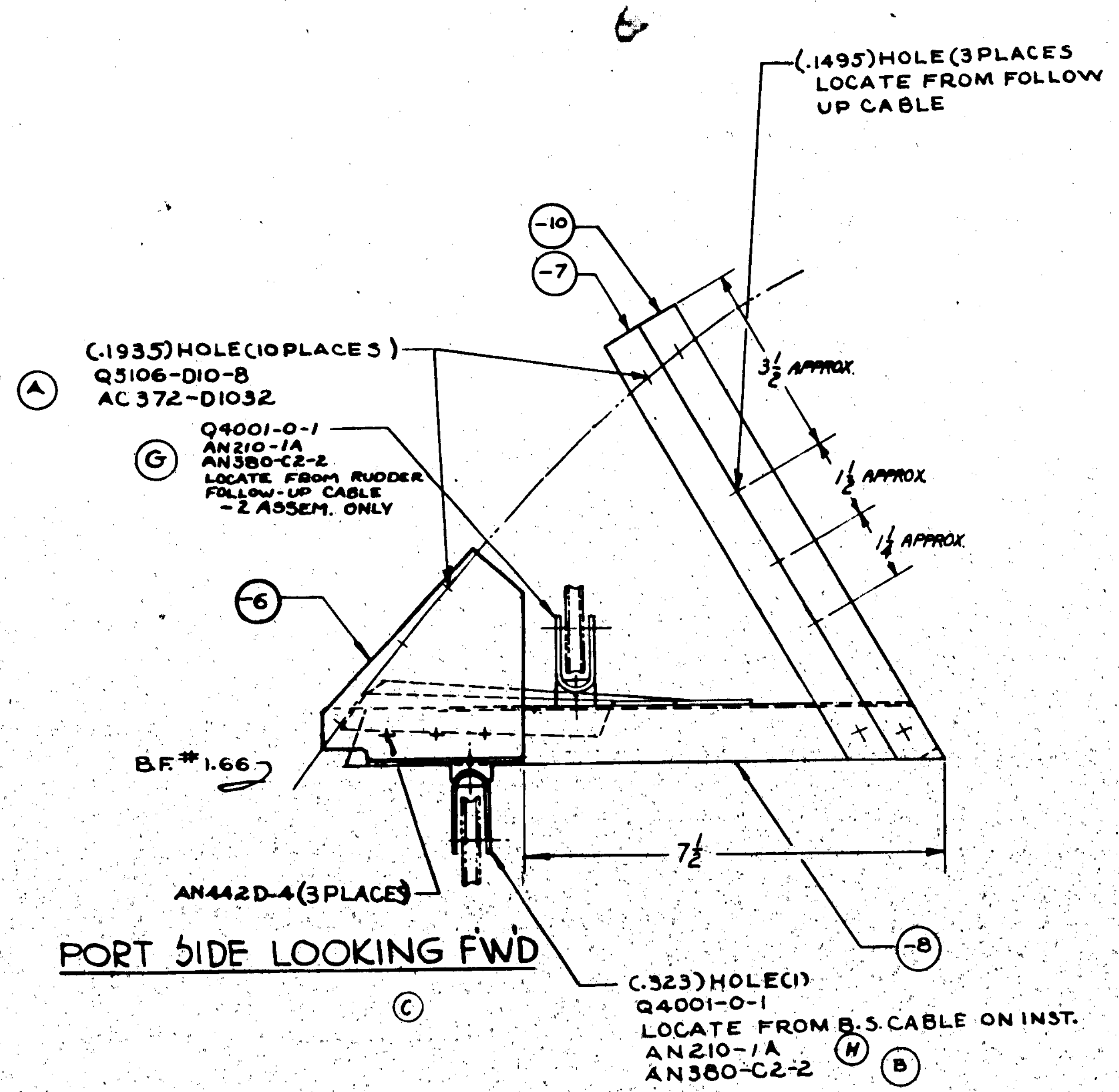

PORT SIDE LOOKING FWD

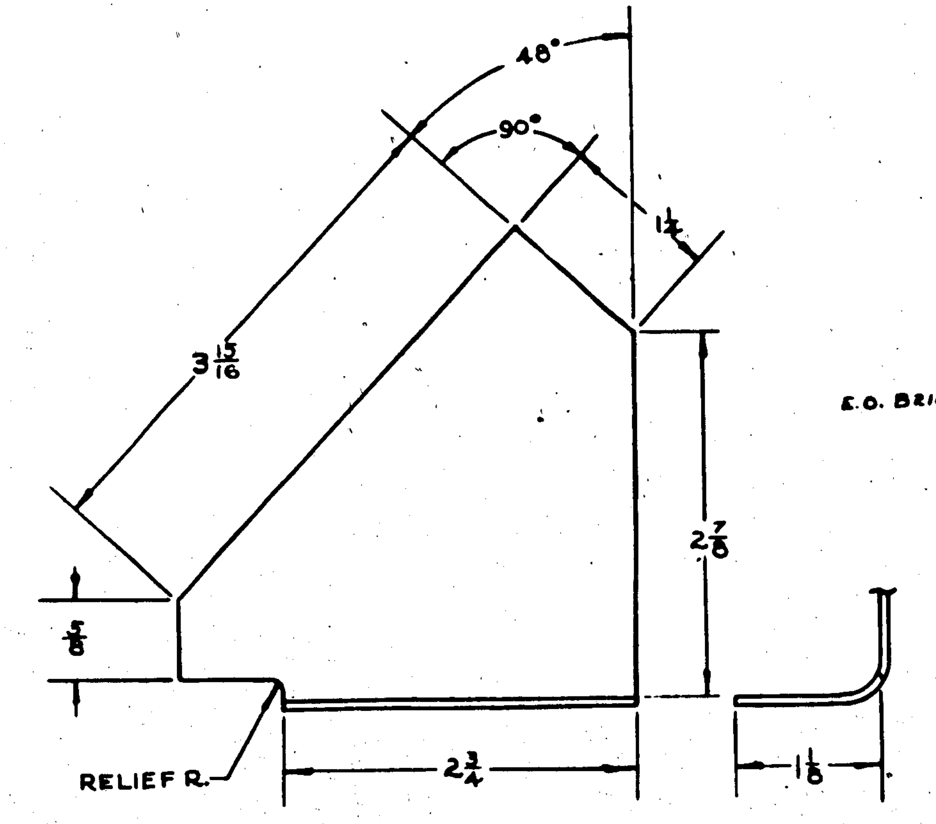

DETAIL OF -6
SCALE 12" = 1'-0"

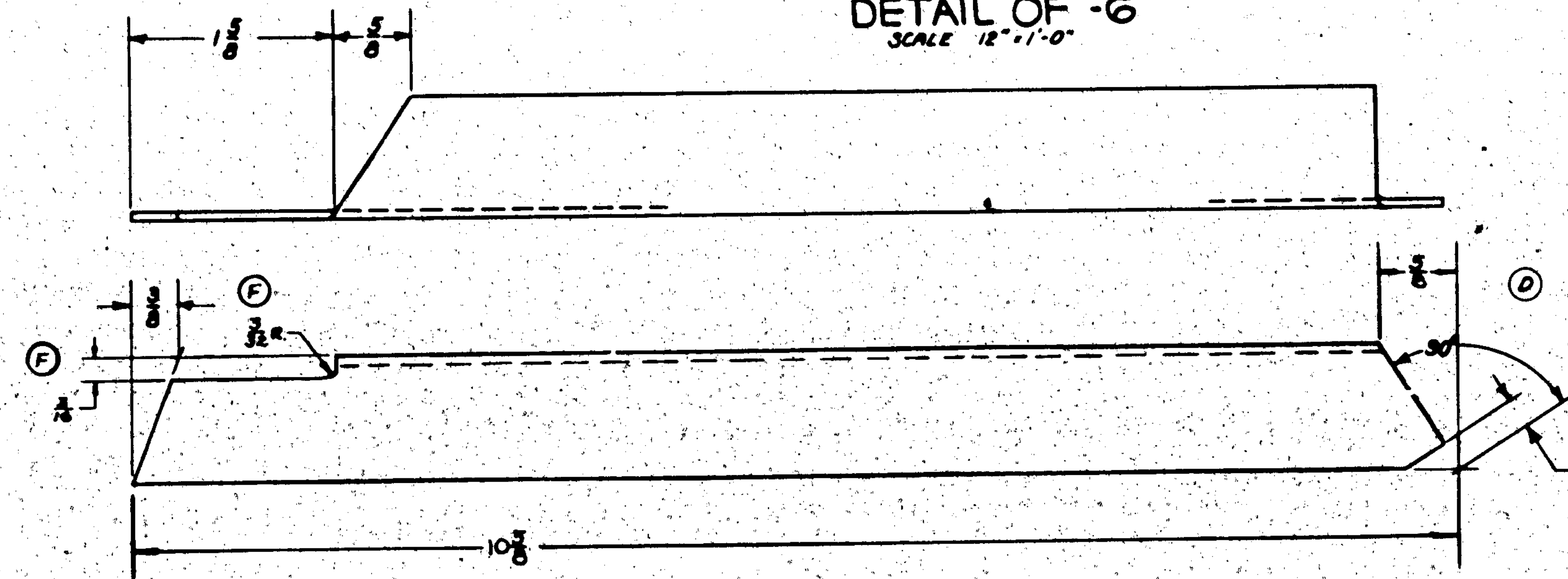

DETAIL OF -8
SCALE 12" = 1'0"

NOTES:
1- BEND RAD. 9/32 UNLESS OTHERWISE SPECIFIED.
(F) 2- MATERIAL FOR -8 MAY BE:
(A) Y-2-A46T X 10 5/8, OR
(B) K78J X 10 5/8, AL. AL. EXT., SPEC. 46A9-T.
3- MATERIAL FOR -9 MAY BE:
(A.) .072 X 1 9/16 X 9 5/8, 24ST. ALC., SPEC. QQ-A-362-T, OR
(B.) K5401 X 9 5/8, AL. AL. EXT., SPEC. 46A9-T.

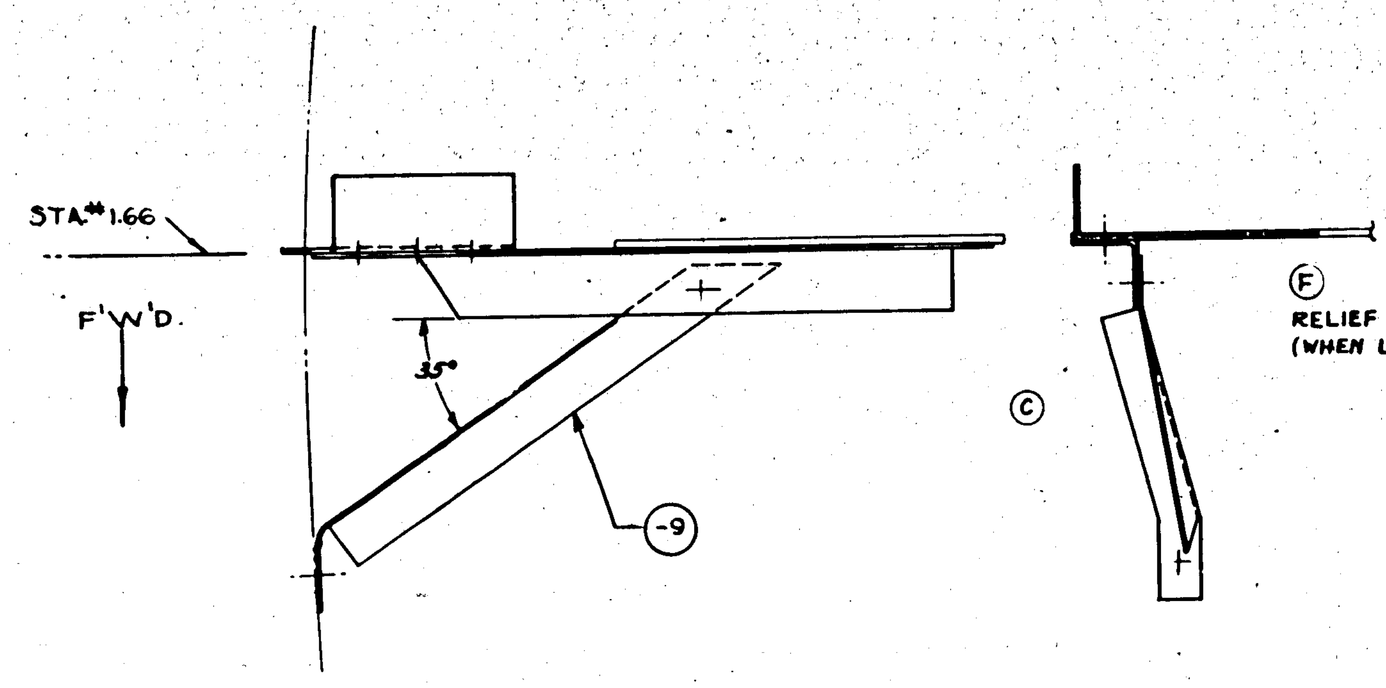

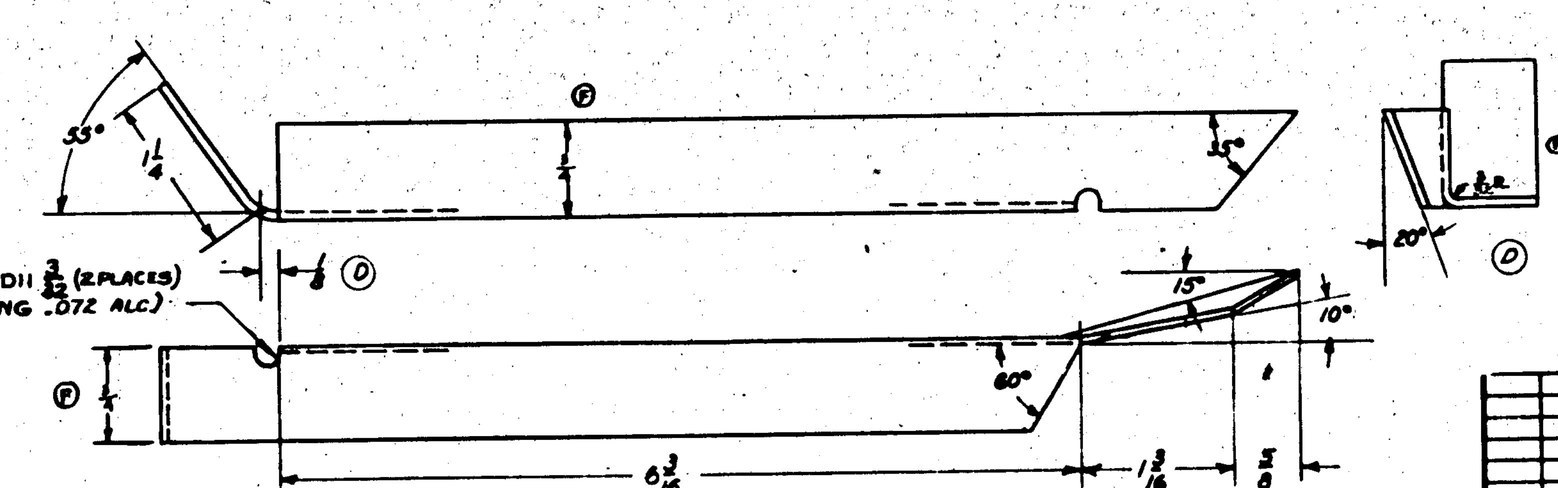

DETAIL OF -9
SCALE 12" = 1'-0"

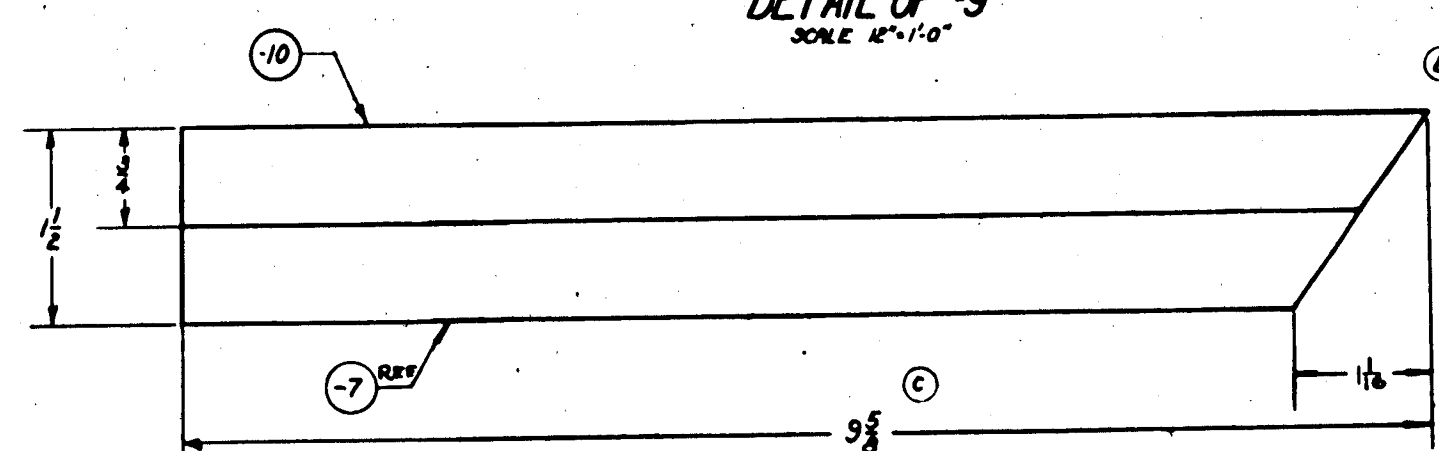

DETAIL OF -7 & -10
SCALE 12" = 1'0"

C# NO. 2 (3) 464, MCR 10H-A FUTURES & SPARES C.91876 # 90 TO # 586

ASSY. DASH NO.	MODEL	NEXT ASSY.	REQ.
-2	PBY-6A	28C6133	1
	PBY-5	28C5133	1
	PBY-5	28C5102	1

REQUIREMENTS PER AIRPLANE

REPLACE E.O.'S A62003, A60663, A[illegible]

REPLACED BY

LIMIT ON DIMENSIONS UNLESS OTHERWISE SPECIFIED ± 1/32 — SCALE 6" = 1'0" & NOTED

STAMP PART NUMBER WHERE SHOWN

PART No	STOCK	MATERIAL	SPEC.	-0 REQ.	-2 REQ.
AN442D5					
AC372-D1032				10	10
Q5106-D10-8				10	10
Q4001-0-1				1	2
AN210-1A				1	2
AN380-C2-2				1	2
-10	1/16 X 3/4 X 9 5/8	PHENOLIC	17P5FBG	1	1
-9	NOTED	NOTED	NOTED	1	1
-8	NOTED	NOTED	NOTED	1	1
-7	1/16 X 3/4 X 9 5/8	PHENOLIC	17P5FBG	1	1
-6	.064 X 4 X 5	AL. AL. 24S	47A10-T	1	1

PARTS LIST PER ASSY.

A C		DRAFT	CHECK	STRUCT	MAT	APPROV
NAVY NONE	NONE	BEACH 11-10-4[illegible]	[illegible]	DUBLA	[illegible]	[illegible]
HEAT TREAT	FINISH					

OPP. HAND —

NAME INSTALL CONTROLS FOLLOW-UP CABLE FAIRLEAD STA. # 1.66

DWG. SIZE G — 28C5132

CONSOLIDATED AIRCRAFT CORP. SAN DIEGO, CALIF.

R

28C5132

LET	ALTERATION	DATE	BY	LET	ALTERATION	DATE	BY

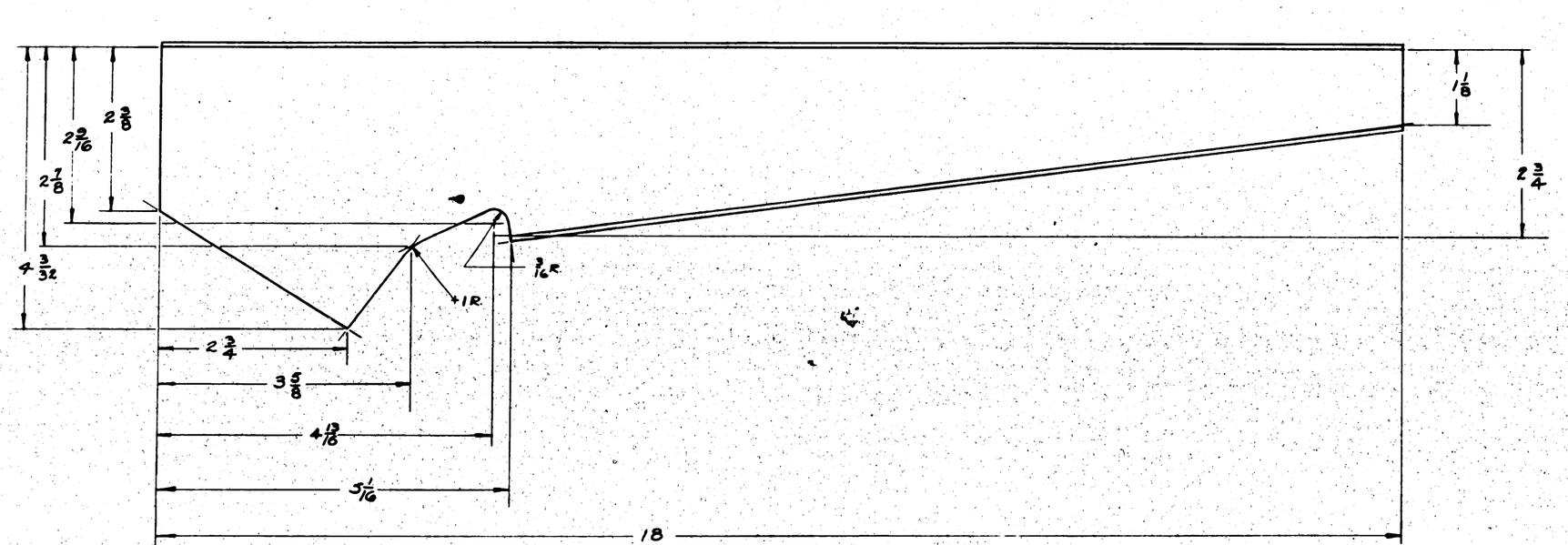

APPROVED FOR TOOLING BY
E. E. Dalton
6-12-43

MCR. 2520

	PART OR ASSY. NO.	MODEL	NEXT ASSY NO.
-R	P8Y-5A	28C5136	1
-L	P8Y-5A	28C5136	1
-R	P8Y-5	28C5136	1
-L	P8Y-5	28C5136	1

REQUIREMENTS PER AIRPLANE

REPLACED — REQ'D Basic QTY

REPLACED BY — ASY QTY

Last No. Engineering Revised Drawing Dimension — SCALE 12"=1'0" — 1/32

STAMP PART NUMBER WHERE SHOWN

@ .064×4¼×8¼ 24ST. ALCLAD-A362 R

PART No.	STOCK	MATERIAL	SPEC	LH REQ	RH REQ	LH REQ	RH REQ	LH REQ	RH REQ	LH REQ	RH REQ
PARTS LIST PER ASSY				-0	-2	-3	-4	-5			

A.C. — HEAT TREAT: NONE — FINISH: EP-GP — DRAFT: V. Pressey 4-18-43 — CHECK — STRUCT — MAT — APPROV

NAME REINFORCEMENT - CONTROL YOKE ARM

CONSOLIDATED AIRCRAFT CORP. San Diego, Calif.

DWG NO. G 28C5136

OPC NAME 28C5136-R

28C5136 R

LET	ALTERATION	DATE	BY
A	RELOCATED -10 IN SEC. AA (12 RIVETS) & CHANGED DESIGN OF -10 TO SUIT. SLIP IN -9 (LEFT SIDE) WAS EN-LARGED -1/16 MINIMUM, 1/16 MAX. & 1/16 RAD CUT OUT.		
B	ADDED "AN442-D4 (3) CENTER IN BACK OF BRKT. WT. CHG. NIL	6-18-42	EMC

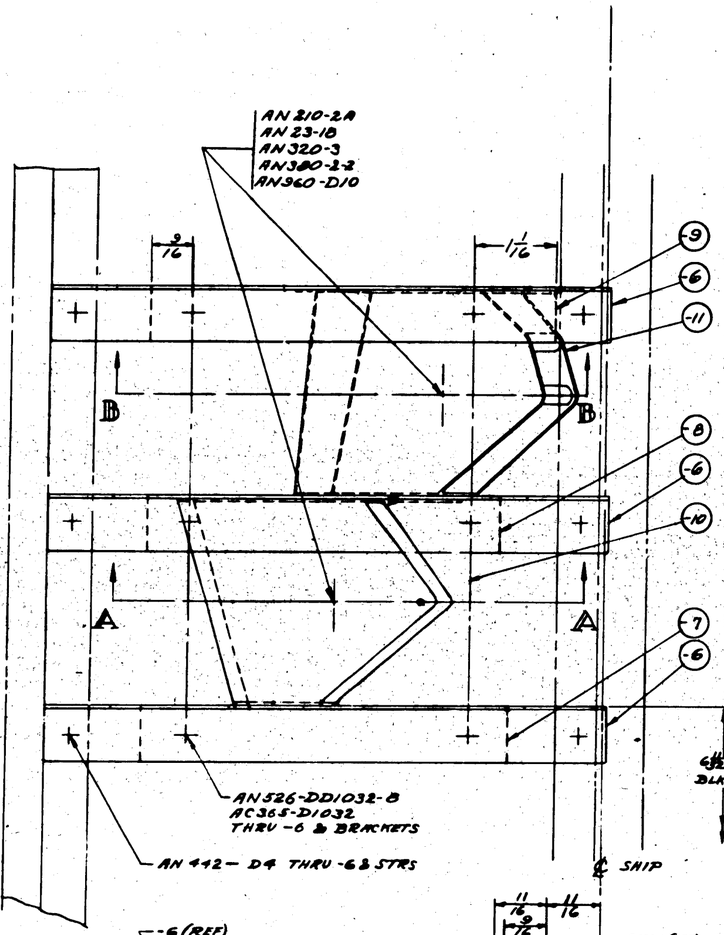

VIEW LOOKING FORWARD

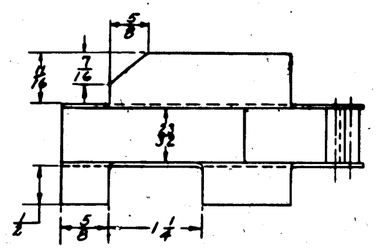

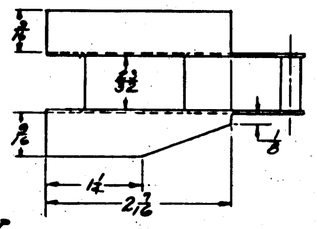

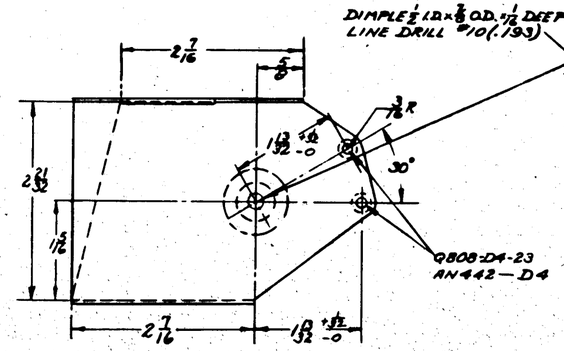

DETAIL -11
SCALE FULL SIZE

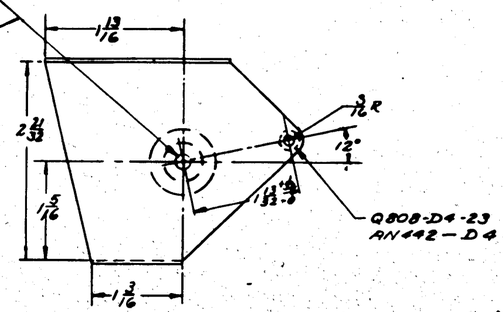

DETAIL -10
SCALE FULL SIZE

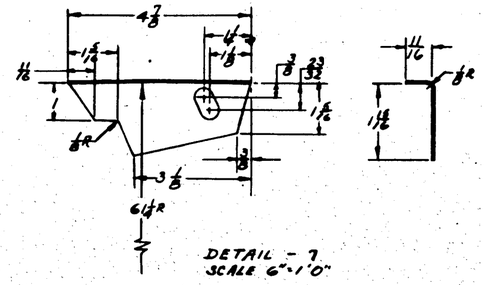

DETAIL - 7
SCALE 6"=1'0"

NOTE:
ALL RADII FOR ENDS OF SLOTS 1/4" EXCEPT AS NOTED
ALL VERTICAL DIM. FOR SLOTS ARE GIVEN NORMAL TO CONTOUR.

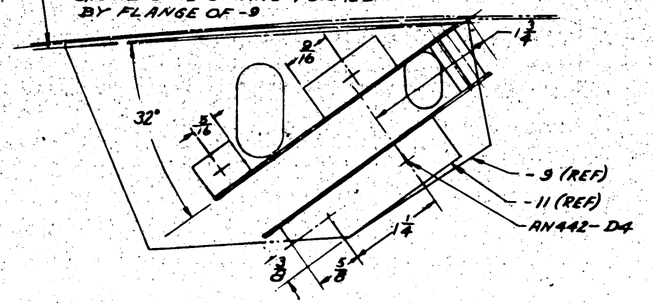

SECT. B-B

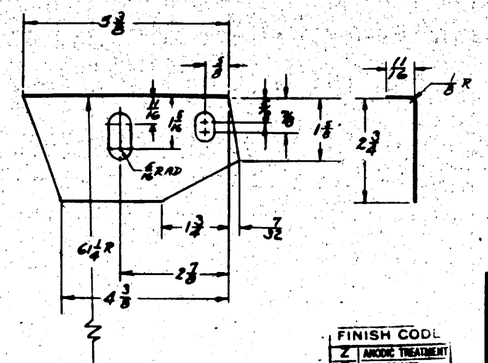

DETAIL - 9
SCALE 6"=1'0"

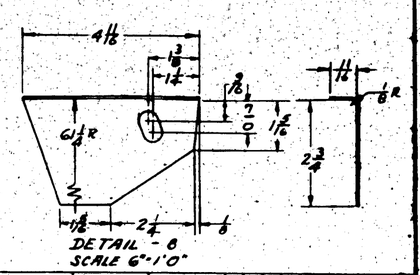

DETAIL - 8
SCALE 6"=1'0"

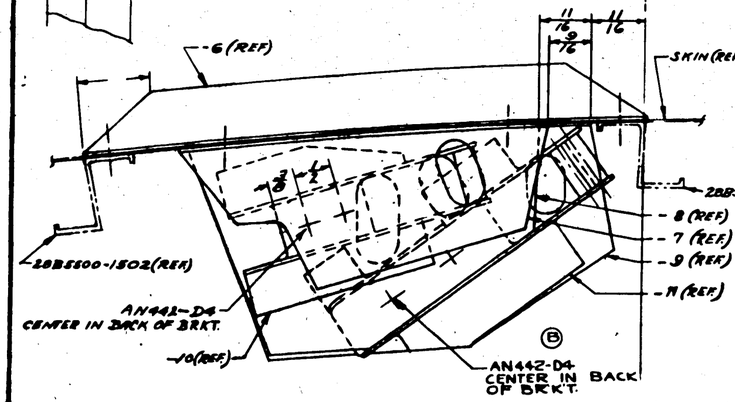

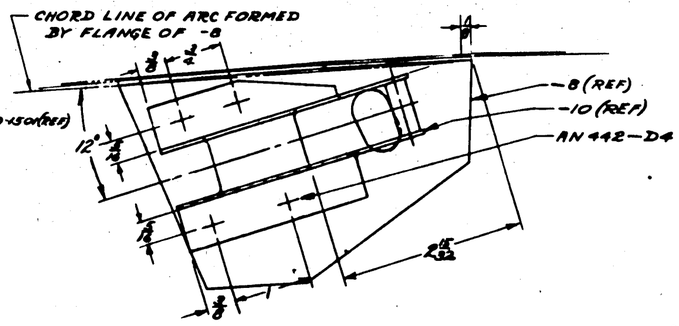

SECT. A-A

ALL BEND RADII 1/16 EXCEPT AS SHOWN

FINISH CODE	
Z	ANODIC TREATMENT
P	P-37 PRIMER
AP	ALUMINIZED PRIMER
C	CADMIUM PLATE

AN 960-D10							2	6
AN 526-DD1032-8								6
AN 442-D4								3
AN 380-2-2							2	
AC 365-D1032								6
AN 320-3							2	
AN 210-2A							2	
AN 23-1B							2	
28B5500-1502								1
-11 .040 x 4 1/2 x 4 1/2				24S0 ALC	4148-A			1
-10 .040 x 3 1/8 x 4 1/2								1
-9 .064 x 3 1/8 x 5 1/16								1
-8 .064 x 3 1/8 x 2 3/4								1
-7 .064 x 2 1/8 x 3				24S0 ALC	4148-A			1
SUB ASSY-10								1
SUB ASSY-9								1
RIVETS -9				V-2-AA-X-7-A-C				3
PART NO	STOCK	MATERIAL	SPEC.				LH REQ.	RH REQ.
PARTS LIST FOR ASSY.							-2	-3

PAY-5A	28C5346	1				
28-5 Arm	28C1750	1				
28-5 Arm	28C1750	1				
PAY-5A	28C5346	1				

C 88476
C 94496
C 94475

LIST DRAWG No.	MODEL	MAT'L ASSY	MIL
REQUIREMENTS PER AIRPLANE			
REPLACED 28C4013	SCALE WT .77 Lbs.		
REPLACED BY			
LIST OF STANDARD VALUES 1 = 1/2 Hardness 1 = 1/2 Thickness .032	SCALE 1/2" = 1'0" APPD.		
STAMP PART NUMBER WHERE SHOWN			

A C
NAVY SR-59 Z-P-2
HEAT TREAT FINISH

3/3/42 KLEIN
DRAFT CHECK STRESS DAY APPROVED

NAME INSTLN-CONTROL TAB BRKTS - STA 4.75
CONSOLIDATED AIRCRAFT CORP. San Diego, Calif.

CAP. HARD NONE
DWG G
DWG 28C5519

LET	ALTERATION	DATE	BY	LET	ALTERATION	DATE	BY
				A	12 INCH DIM. REMOVED AND FOLLOWING DIM. CHANGED— 4 3/8 WAS 4 21/32, 3 31/32 WAS 4 1/32, 1 5/8 WAS 1 31/32, 2 13/16 WAS 3 3/16, 2 17/32 WAS 3 1/32, 5 13/16 WAS 6 1/2, 6 3/32 WAS 6 1/2, 18 WAS 18 1/2	9-11-41	[illegible]
				B	5/8 DIM. WAS 1/2, Q808-4-20(2) WAS Q808-4-16(2). CORRECTED INST.-8 TO SUIT (FLANGE WAS OUTSIDE -7) NEG. WT. CHG.	4-3-42	[illegible]

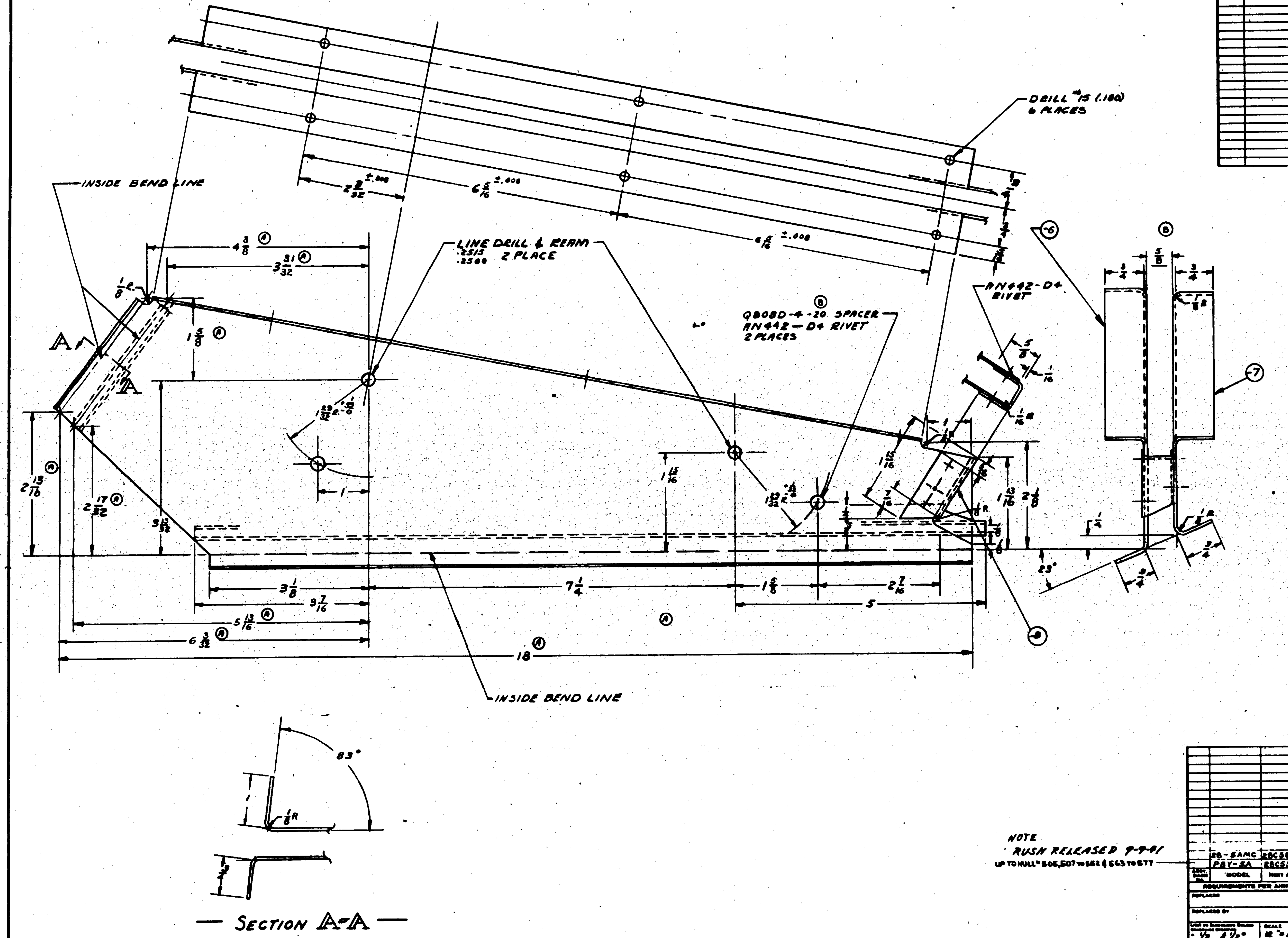

NOTE
RUSH RELEASED 9-9-41
UP TO HULL # 506, 507 TO 562 & 563 TO 577

GP-GREEN PRIME

FINISH CODE	
Z	[illegible]
P	P-27 PRIMER
AP	ALUMINIZED PRIMER
C	CADMIUM PLATE

28-5AMC	28C5526	1	
PBY-5A	28C5526	1	
ASSY. DASH NO.	MODEL	NEXT ASSY.	REQ.
REQUIREMENTS PER AIRPLANE			
REPLACES		1.2 CALC. WT.	
REPLACED BY		ACT. WT.	
LIMITS ON DIMENSIONS UNLESS OTHERWISE SPECIFIED ± 1/32 ± 1/2°	SCALE 12" = 1'0"		
STAMP PART NUMBER WHERE SHOWN			

PART No	STOCK	MATERIAL	SPEC.	REQ. -0	REQ. -2	REQ. -3	REQ. -4	REQ. -5
AN442—D4								
Q808D-4-20				2				
-8	.040 X 2 1/4 X 2 1/4	AL. ALC. SHT.	47A8-P	1				
-7	.064 X 7 X 19 1/4	AL. ALC. SHT.	47A8-A	1				
-6	.064 X 7 X 19 1/4	AL. ALC. SHT.	47A8-A	1				
PARTS LIST PER ASSY.								

A C	——	——	9-2-41	FRED GREEN			CARLSON
NAVY	23ND. R. T. SR-53 (7)	Z-P-2 [illegible] GP	[illegible]	9-2-41		[illegible]	[illegible]
	HEAT TREAT	FINISH	DRAFT	CHECK	STRUCT	MAT	APPROV.

NAME BRACKET ASSY-CONTROLS RUDDER IDLER PULLEY (R.H.) — OPP. HAND — SIZE G — DWG. 28C5520

CONSOLIDATED AIRCRAFT CORP. SAN DIEGO, CALIF.

LET	ALTERATION	DATE	BY
A	[illegible]	7-14-41	[illegible]
B	[illegible]		
C	[illegible]	8-1-41	[illegible]

DRILL #18 (.169) 6 PLACES

© Q808D-4-20 SPACER AN442—D4 RIVET 2 PLACES

AN442—D RIVET

LINE DRILL & REAM .0518 .2500 2 PLACES

INSIDE BEND LINE

A

-7 -6 -5 ANGLE -8 © -10 ANGLE

AN442-D3 RIVET 1 INCH SPACING (APPROX.)

INSIDE BEND LINE

— SECTION A-A —

NOTE
RUSH RELEASED 9-9-41

UP TO MAL 505, 507-552 & 563 TO 577

PART NO	STOCK	MATERIAL	SPEC.	LH REQ.	RH REQ.	LH REQ.	RH REQ.	LH REQ.	RH REQ.
PARTS LIST PER ASSY.				-0	-2	-3	-4	-5	
-10	K78PX7	AL. ALLOY	4A78-A	AR					
-8	K78PX7	AL. ALLOY	4A78-A		AR				
-7	.040X2½X12 1/4	AL. ALLOY	4178-A			AR			
-6	.040X7 1/4X12 1/4	AL. ALLOY	4178-A				AR		
-5	.064X7 1/4X9 1/2	AL. ALLOY	4178-A					AR	

-0	ASSEMBLY	28C5525	1
-0	PAY-SAVE PACKAGE		1
CLASS CODE	MODEL	NEXT ASSY.	QUAN.

REQUIREMENTS PER AIRPLANE

REPLACES: 10 (Quan. Per)

REPLACED BY: (Ass'y No.)

Limit on Decimals Unless Otherwise Specified: ± 1/32 ± 1°

SCALE: 12" = 1'0"

STAMP PART NUMBER WHERE SHOWN

AC
NAVY Comp. 2 Yr. 5# 28 (1)
HEAT TREAT
.2-P-2[illegible]GP
FINISH

DRAFT	CHECK	STRUCT	MAT	APPROV	TRIM
9-9-41	[illegible]				

NAME BRACKET ASSY—CONTROLS RUDDER IDLER PULLEY (LH)

CONSOLIDATED AIRCRAFT CORP. SAN DIEGO, CALIF.

OPP. HAND | DWG. SIZE G | DWG. NO. 28C5525

P-GREEN PRIME
FINISH CODE

Z	ANODIC TREATMENT
P	P-7 PRIMER
AP	ALUMINIZED PRIMER
C	CORROSION PLATE

AN442-D3
AN442-D4
Q808D-4-20

E.O. A74576

LET	ALTERATION	DATE	BY	LET	ALTERATION	DATE	BY
A	CHG'D NOTE: "NORMALIZE --- 125,000 PSI" WAS "HEAT TREAT --- 125,000 PSI." NO WF CHG	6-19-42	[illegible]				

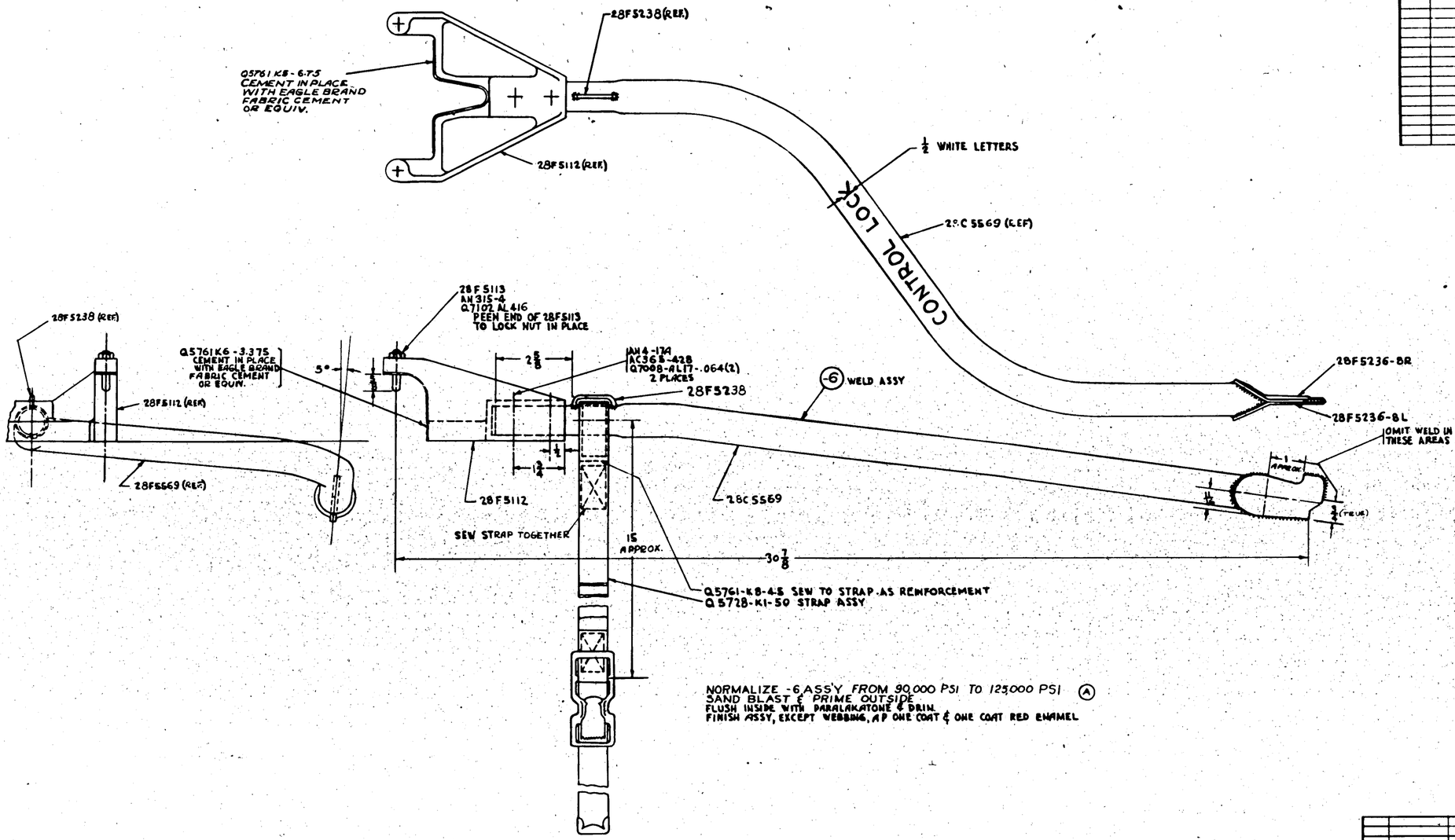

NORMALIZE -6 ASSY FROM 90,000 PSI TO 125,000 PSI (A)
SAND BLAST & PRIME OUTSIDE
FLUSH INSIDE WITH PARALAKATONE & DRIM.
FINISH ASSY, EXCEPT WEBBING, AP ONE COAT & ONE COAT RED ENAMEL

NO. (6) 464, CONT. 77713 & 88476 CONT. 91876

ASSY DASH NO.	MODEL	NEXT ASSY	NOS.
	28-5 ANN	28C3570	1
	PBY 5B	28C3570	1
	PBY 5A	28C3570	1
	PBY5	28C3570	1

REQUIREMENTS PER AIRPLANE

REPLACES AN 4381-1 & 28F5237 — 2.64 CALC WT
REPLACED BY — ACT WT

LIGHT ON DIMENSIONS UNLESS OTHERWISE SPECIFIED: ± Y32
SCALE 6" = 1'-0"
STAMP PART NUMBER WHERE SHOWN

PART No	STOCK	MATERIAL	SPEC	LH REQ -0	RH REQ -2	LH REQ -3	RH REQ -4	LH REQ -5	RH
28F5238				1	1				
28F5236-8R					1				
28F5236-8L							1		
28C5569				1					
-6 SUB ASSY (WELD)				1	1				
Q5761 KB-4.5						1	1		
Q5728 K1-50						1	1		
Q7102 AL 416						2	2		
Q7008 AL17-.064						4	4		
Q5761 K6-6.75						2	2		
Q5761 K6-3.375						2	2		
AC 368-428						2	2		
AN 315-4						2	2		
AN4-17A						2	2		
28F5113				1	1				
28F5112				1	1				
-6 SUB ASSY				1	1				

PARTS LIST PER ASSY

AC			6-16-42		BENDING	ELLAN	WELDING	ZICK	
NAVY NOTED	NOTED		AASCO				4-24-42		WOLD 4/23
HEAT TREAT	FINISH		DRAFT	CHECK	STRUCT	MAT	APPROV	ENG	

NAME LOCK ASSY - CONT - AIL. & ELEV. - YOKE
OPP HAND
CONSOLIDATED AIRCRAFT CORP. SAN DIEGO, CALIF
DWG G DSB
28C5567

R

NOTE:
-7 & -8 TO BE ATTACHED TO BRACKET ON INSTALLATION

	LET	ALTERATION	DATE	BY
ER A3565	A	RELOCATED PULLEYS	3-4-41	FOSTER
	B	ON FACE OF DRG. 28C5747-6 & -15 CHANNELS WAS -7 & -8 CHANNELS Q4011-0-1 WAS Q4011-0-2; Q4004-0-2 (3) WAS (2) ADDED Q4004-0-1 (1 REQ) TO FACE & B/M, DRG. CHGD. TO COINCIDE WITH 28C5747 ASSY	11-1-41	STEW
EO A54534	C	ADDED -7 & -8 & DETAILS; NOTE "-7 & -8 --- INSTALLATION" & AN442-D5. NEG WT CHG.	7-24-42	SWAN
	D	REM. FROM B/M (RH. ASS'Y.) Q4011-0-1 (1) NO WT CHG.	6-10-43	NICHOLS

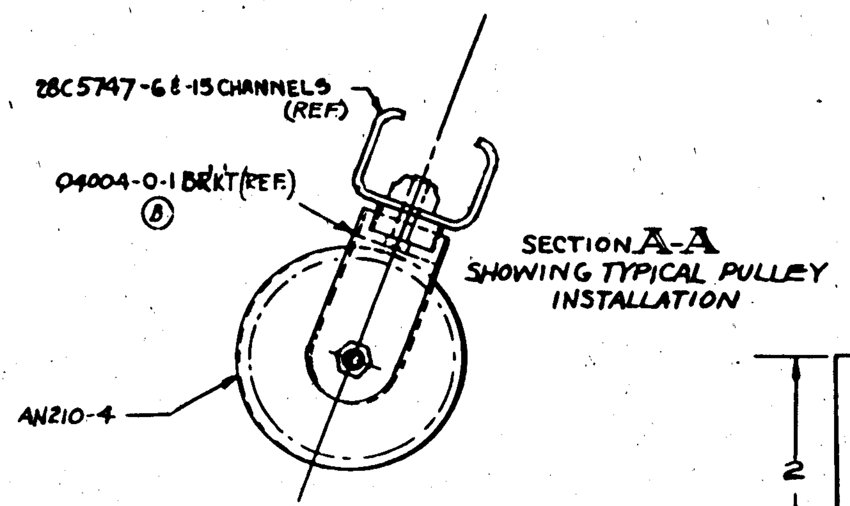

SECTION A-A
SHOWING TYPICAL PULLEY INSTALLATION

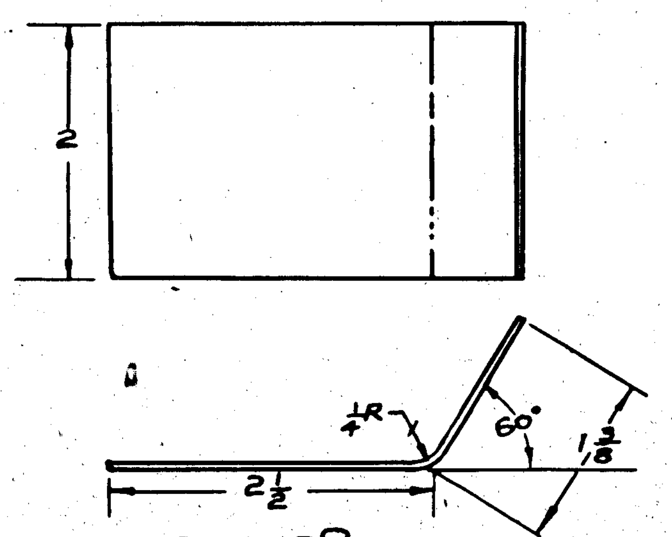

DETAIL -8 SCALE 12"=1'0"

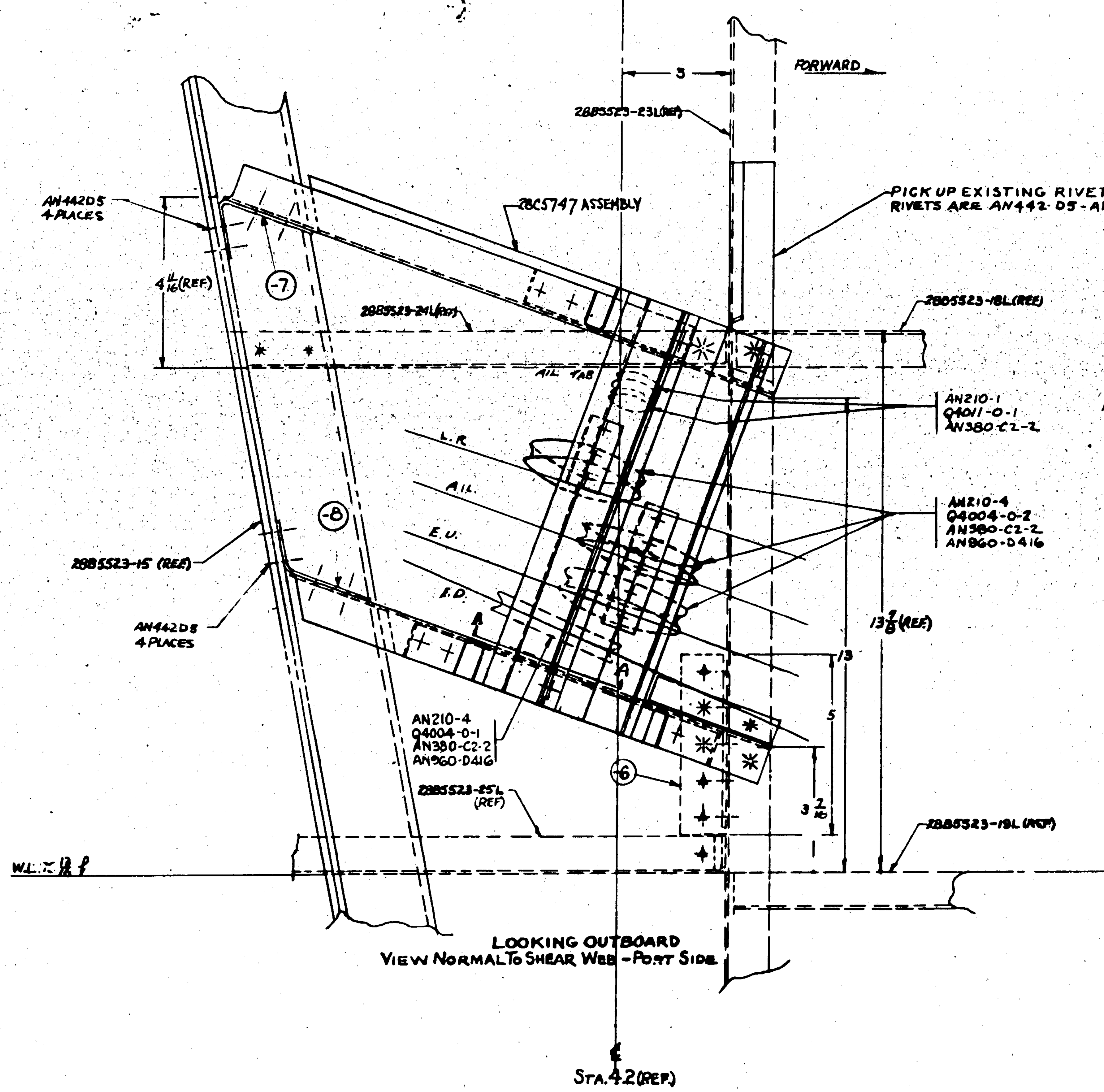

1. NOTE:-
RIVET PULLEY BRACKET TO SHEAR WEB WITH AN442-D5 RIVETS - SPACING APPROX 1" AT BULKHEADS; PICK UP EXISTING RIVETS FROM 28B5523 WHERE POSSIBLE.

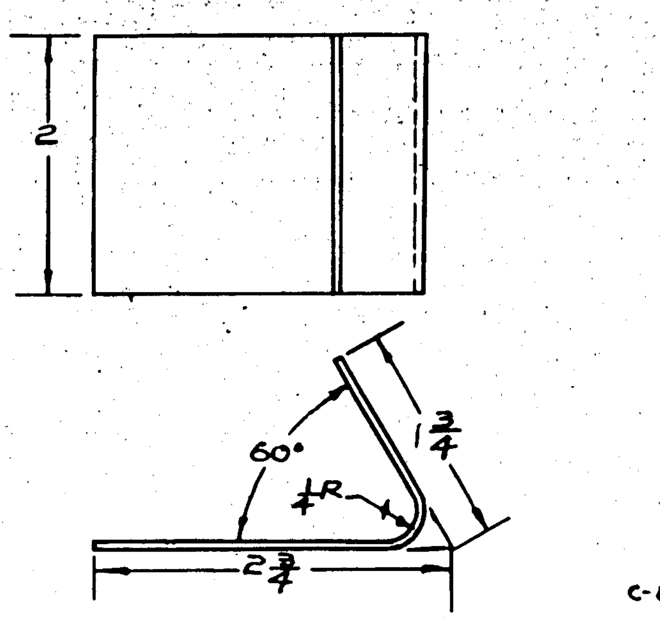

DETAIL -7 SCALE 12"=1'0"

FINISH CODE	
Z	ANODIC TREATMENT
P	P-27 PRIMER
AP	ALUMINIZED PRIMER
C	CADMIUM PLATE

	ASSY DASH No	MODEL	NEXT ASSY	REQ.
C-88476	-R	PBY-5A	28C5564	1
	-L	PBY-5A	28C5564	1
	-R	28-5AMN	28C5750	1
	-L	28-5AMN	28C5750	1
	-R	28-5AMC	28C5750	1
	-L	28-5AMC	28C5750	1
C-70496 & 77713	-R	PBY-5A	28C5700	1
	-L	PBY-5A	28C5700	1

REQUIREMENTS PER AIRPLANE

REPLACES -L 4564 -R ... REPLACED BY

LIMIT ON DIMENSIONS UNLESS OTHERWISE SPECIFIED ± 1/32 SCALE 6"=1'0"

STAMP PART NUMBER WHERE SHOWN

PART No	STOCK	MAT.	SPEC	-0 LH	-0 RH
AN442-D5					
AN380-C2-2	COTTER			10	8
AN210-1	PULLEY			2	
AN210-4	PULLEY			4	4
Q4011-0-1				1	
Q4004-0-1				1	1
Q4004-0-2				3	3
28C5747-2					1
28C5742-0				1	
-8	.064X4X2 1/8	ALAL 24ST	47A10 COND. T	1	1
-7	.064X4 3/8X2 1/8	ALAL 24ST	47A10 COND. T	1	1
-4	Y2-A58T X 5/8			1	1

PARTS LIST PER ASSY. (REQ. -0, -?, -3, -4, -5; LH / RH)

A C		D.H. JAMISON	ZP		WTS. BMH	YA	C.N.
NAVY	FINISH - 6 Z-P 2A	5-27-41	E. BAUM	OWEN	C.W.S.	9-16-41	G.C.
HEAT TREAT	FINISH	DRAFT	CHECK	STRUCT	MAT	APPROV	ENG

OPP. HAND 28C5743-R

NAME INSTALLATION-CONTROLS-PULLEY BRACKET-AT-WHEEL-WELL-CORNER

CONSOLIDATED AIRCRAFT CORP. SAN DIEGO, CALIF.

DWG. G 28C5743

R 2/10/41

28C5743

LET	ALTERATION	DATE	BY
	E.O. 35446 PBY-5A CO-SAMC OA-10		
A	Above NOTE:- FLUSH THIS RIVET AN425-D4 IN TOP FLANGE OF SECTION	4/MAY/[illegible]	[illegible]
	DIM 11 3/8 WAS 11 1/2 CHANGED		
	MADE ON FACE OF DWG.		
K	-15 WAS -6 -8 WAS -7 -6 WAS -8		
	-12 ASSY W/AL -11 ASSY, ADDED -14		
	-8 -16 -16 ASSY WAS -12 ASSY		
	DRILL NOTE WAS "DRILL & CBORE"		
C	CORRECTED AS ACCORDINGLY	5-Jul [illegible]	
D	NOTE "5/16 HOLE ... 4 PLATE WAS		
	DRILL #(REF)... WT. CHG. NIL	7-14-42	[illegible]
E	-10 IS NOW ASSY'D WITH AL ALLOY		
	-SHEET, ASSY'D WAS AL ALLOY -10 IS		
	NOW ALCLAD WAS AL ALLOY WT. CHG. NIL	17-Aug	CHANGE
F	ON -12 & -16 SUB-ASSYS REMOVED NOTE		
	"FLUSH-SIDE" ADD TO -12 NOTE (7) &		
	- CHANNEL" NEG WT CH	7-14-42	[illegible]
G	IN VIEW A-A CHANGED DIM OF HOLE		
	LOCATING LOWER PULLEY FROM 2 1/16		
	TO 2 5/16 CHANGED 4 1/2 DIM. V PLACE		
	TO 4 1/16". NO W.T. CHG.	8-20-42	[illegible]

E.O. A50153

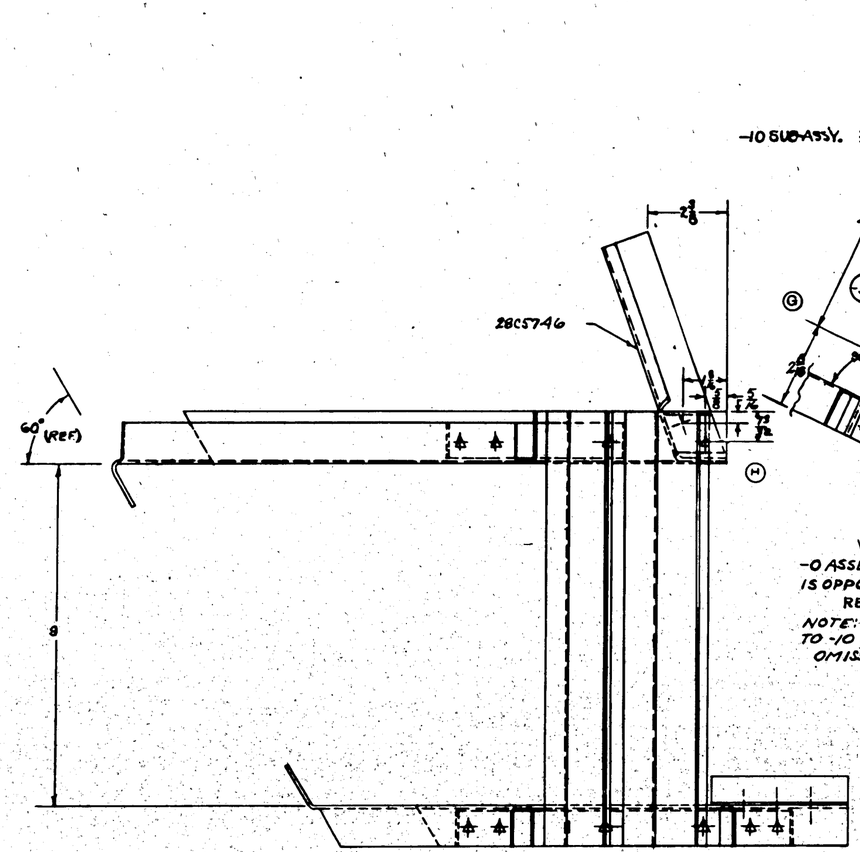

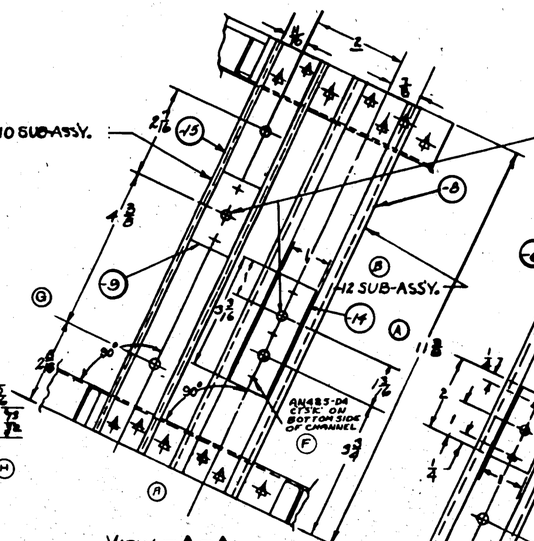

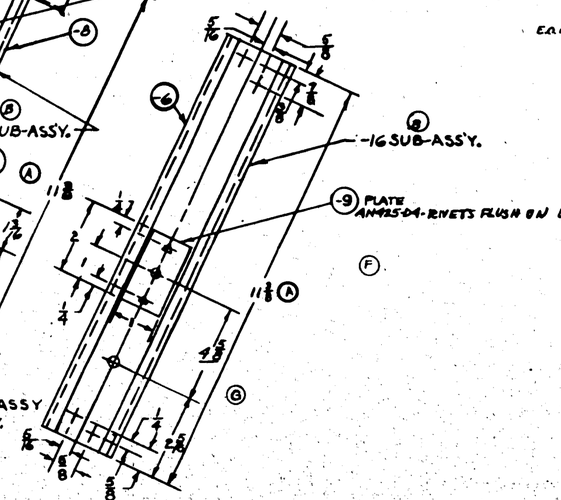

VIEW -A-A

-0 ASSEMBLY AS SHOWN ABOVE. -2 ASSY IS OPPOSITE EXCEPT -16 SUB-ASS'Y. REPLACES -10 SUB-ASSY.

NOTE: -16 SUB-ASSY IS IDENTICAL TO -10 SUB-ASSY EXCEPE FOR OMISSION OF ONE HOLE (B)

NOTE:-
ALL RIVETS AN442-D4 EXCEPT AS NOTED

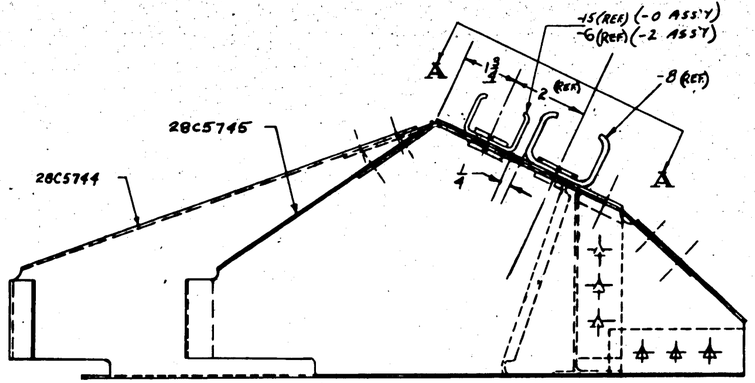

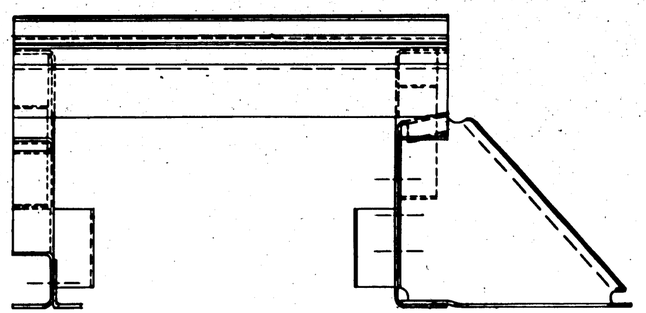

+ = RIVETS	(SIZE INDICATED AT INTERVALS BY THE FOLLOWING MARKINGS)		
+ = 1/8	+ = 5/32	* = 3/16	
⊕ = 1/4	⊞ = 5/16	⊛ = 3/8	

FINISH CODE

Z	ANODIC TREATMENT
P	R-07 PRIMER
AP	ALUMINIZED PRIMER
C	CADMIUM PLATE

PART No	STOCK	MATERIAL	SPEC	LH REQ	RH REQ	LH REQ	RH REQ	LH REQ	RH REQ
	PARTS LIST PER ASSY			-0	-2	-3	-4	-5	
AN425-D4									
-9	091 x 1 1/8 x 2 1/8	ALCLAD SHT 4748 Comb T		1					
-6	Y12A35T x 11 4/8								
-16	SUB ASS'Y								
AN425-D4									
-14	091 x 1 1/8 x 3 1/2	ALCLAD SHT 4748 Comb T		1					
-8	Y12A46T x 11 4/8								
-12	SUB ASS'Y								
AN425-D4									
-9	091 x 1 1/8 x 2 1/8	ALCLAD SHT 4748 Comb T		1					
-15	Y12A35T x 11 4/8								
-10	SUB ASS'Y								
28C5746-R	BRACE - TOP				1				
28C5746-L	BRACE - TOP			1					
28C5744-R	BLKD LOWER				1				
28C5745-L	BLKD LOWER			1					
28C5744-R	BLKD UPPER				1				
28C5745-L	BLKD UPPER			1					
AN442-D4									
-16	SUB ASS'Y			1	1				
-12	SUB ASS'Y								
-10	SUB ASS'Y			1	1				

ASSY Basis No	MODEL	Next Assy	QTY
-2	28-3AMN	28C5743	1
-0	28-3AMN	28C5743	1
-2	28S-AMC	28C5743-2	1
-0	28S-AMC	28C5743-0	1
-2	PBY-5A	28C5748	1
-0	PBY-5A	28C5748	1

REQUIREMENTS PER AIRPLANE

REPLACES
REPLACED BY
EST WT: 2.86 CALC WT:

STAMP PART NUMBER WHERE SHOWN

1/32 SCALE 6"=1'0"

A.C. NAVY HEAT TREA

FINISH

DRAFT [illegible] CHECK [illegible] STRUCT [illegible] MAT [illegible] PROJ [illegible] ENGR [illegible]

NAME ASSEMBLY-CONTROLS-PULLEY BRACKET-AT WHEEL WELL CORNER

CONSOLIDATED AIRCRAFT CORP. SAN DIEGO, CALIF.

OPP HAND 28C5747-2

SIZE G

28C5747

28C5747 R

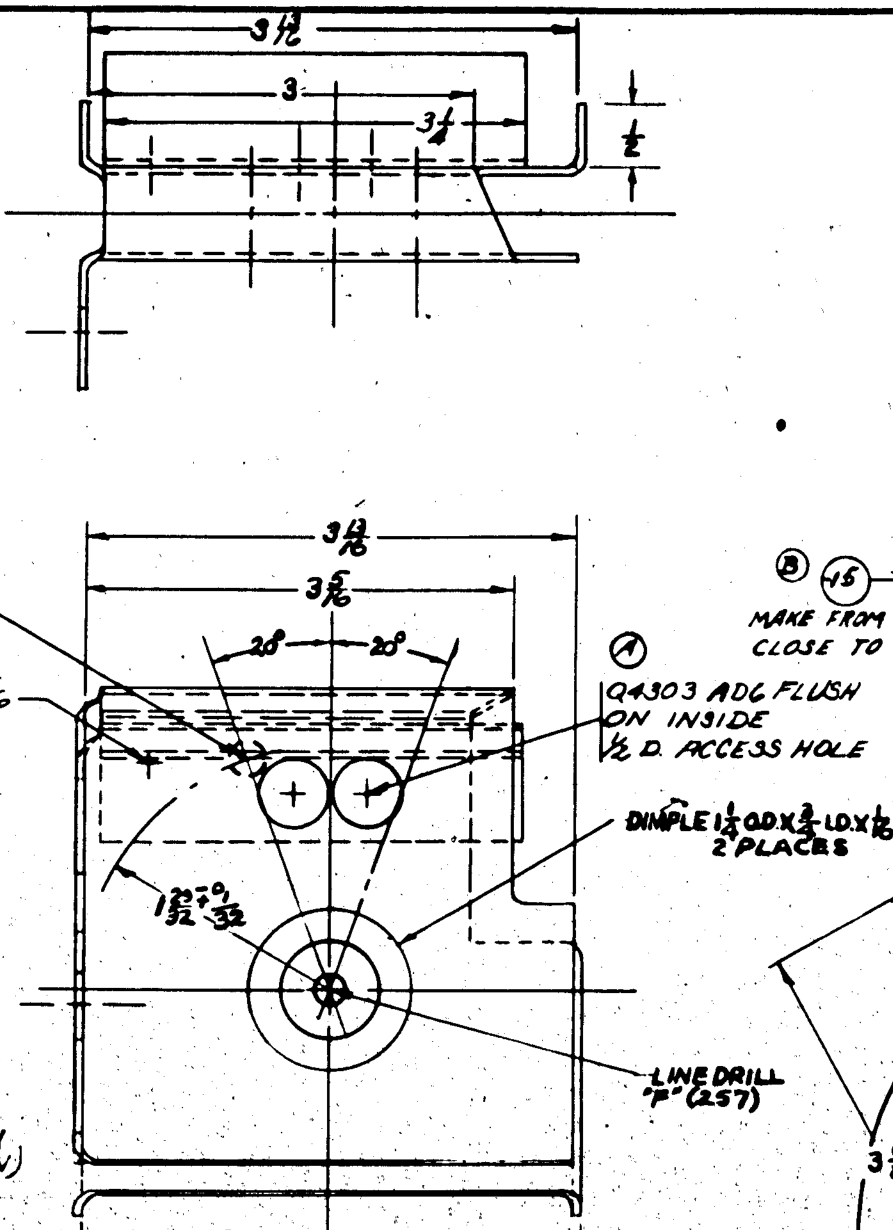

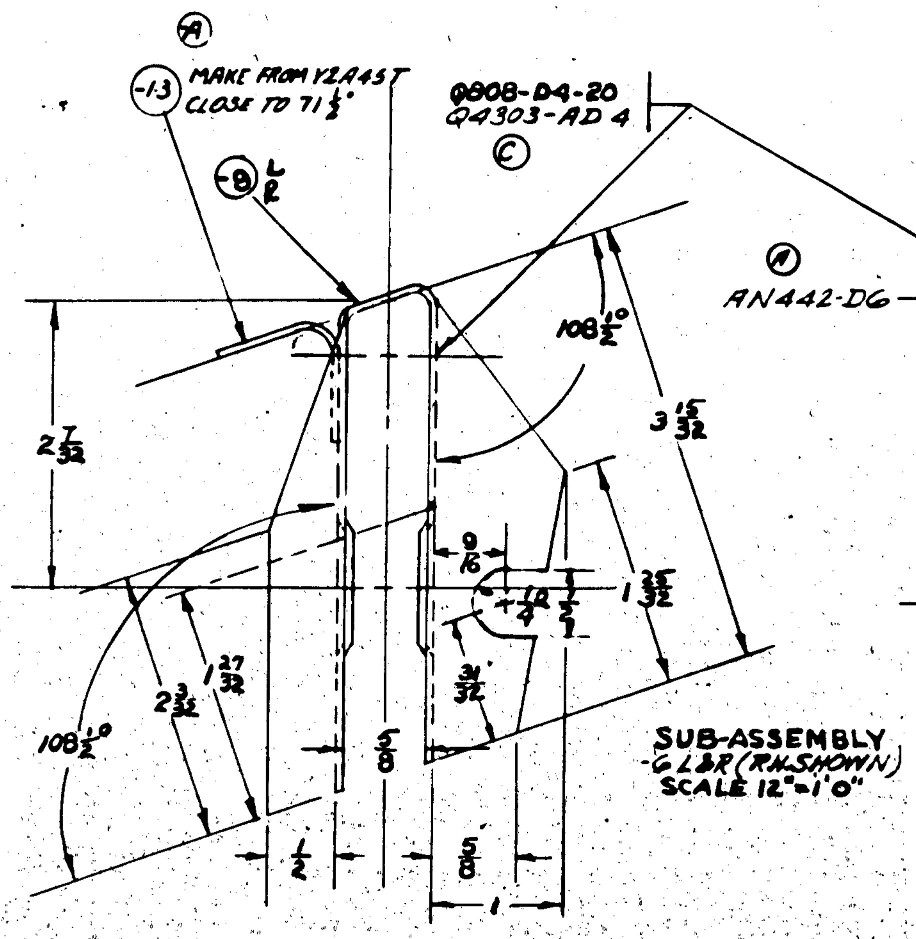

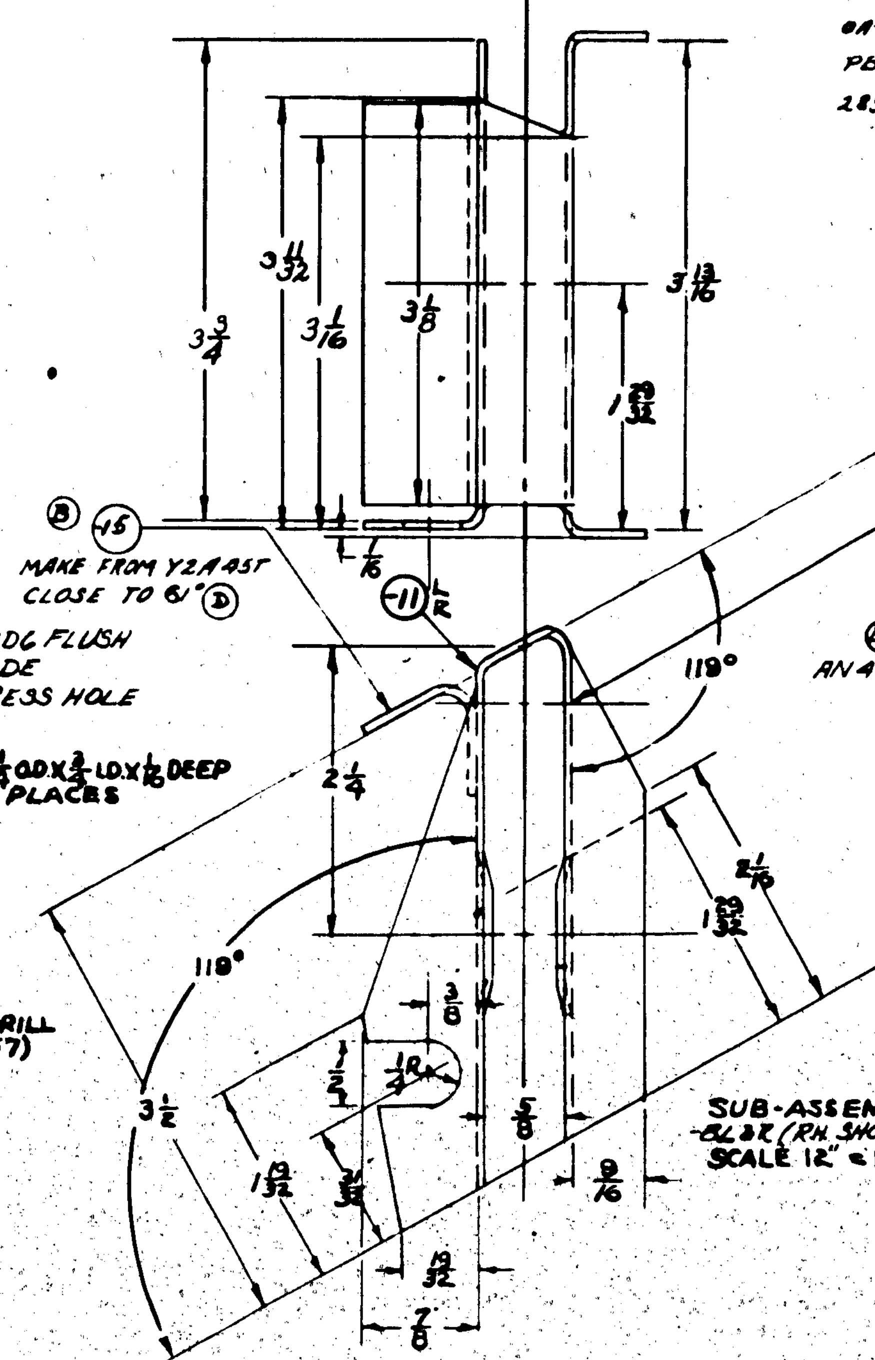

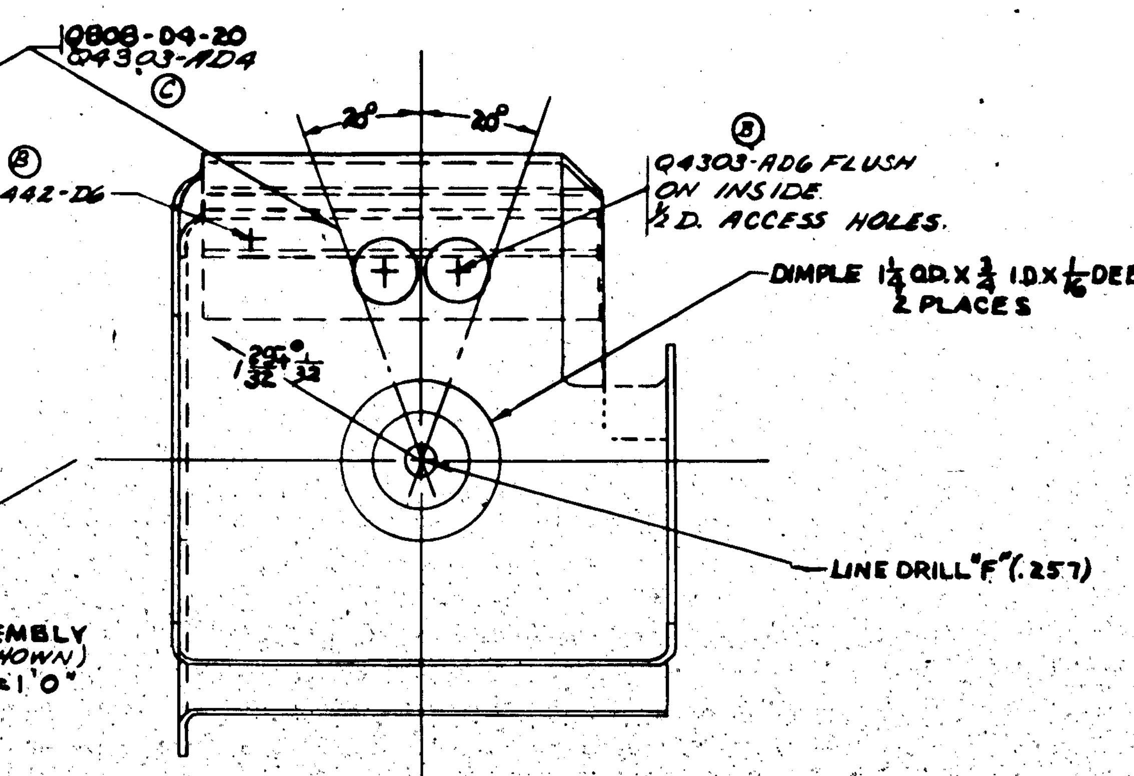

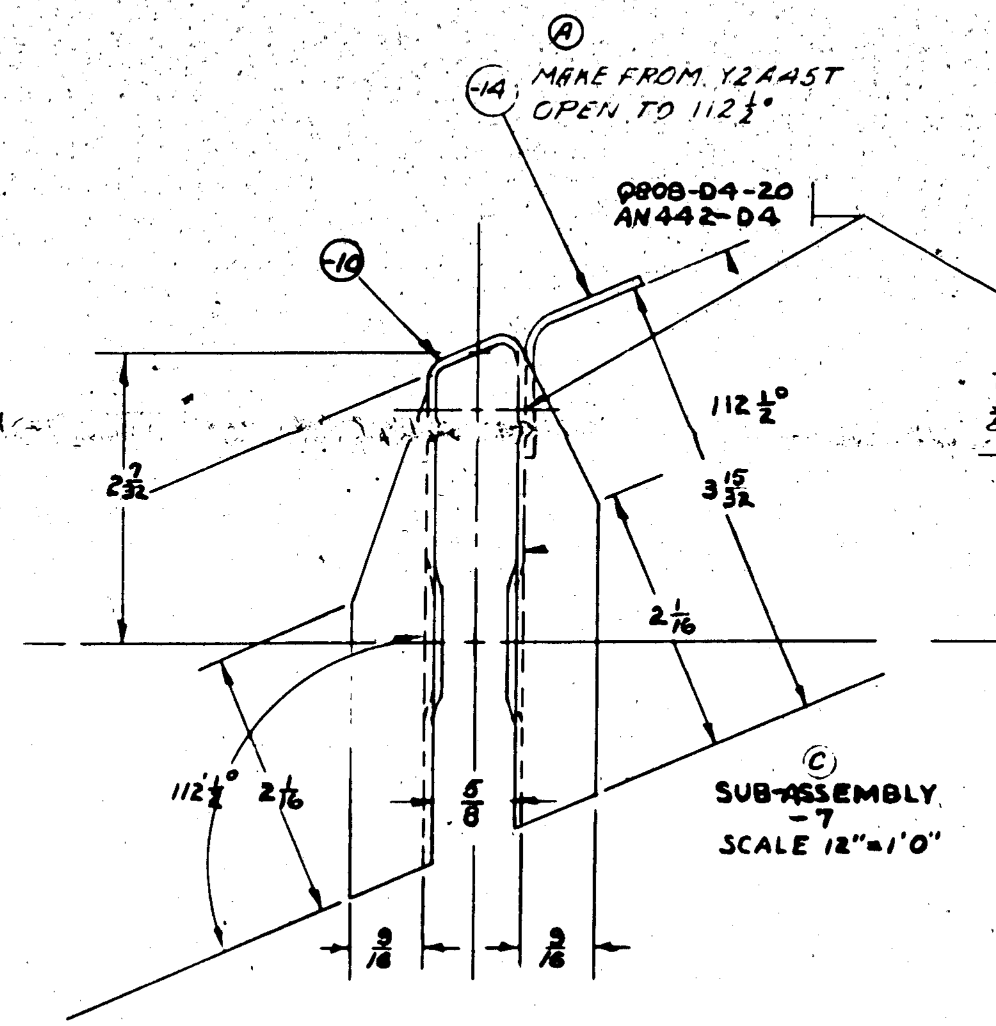

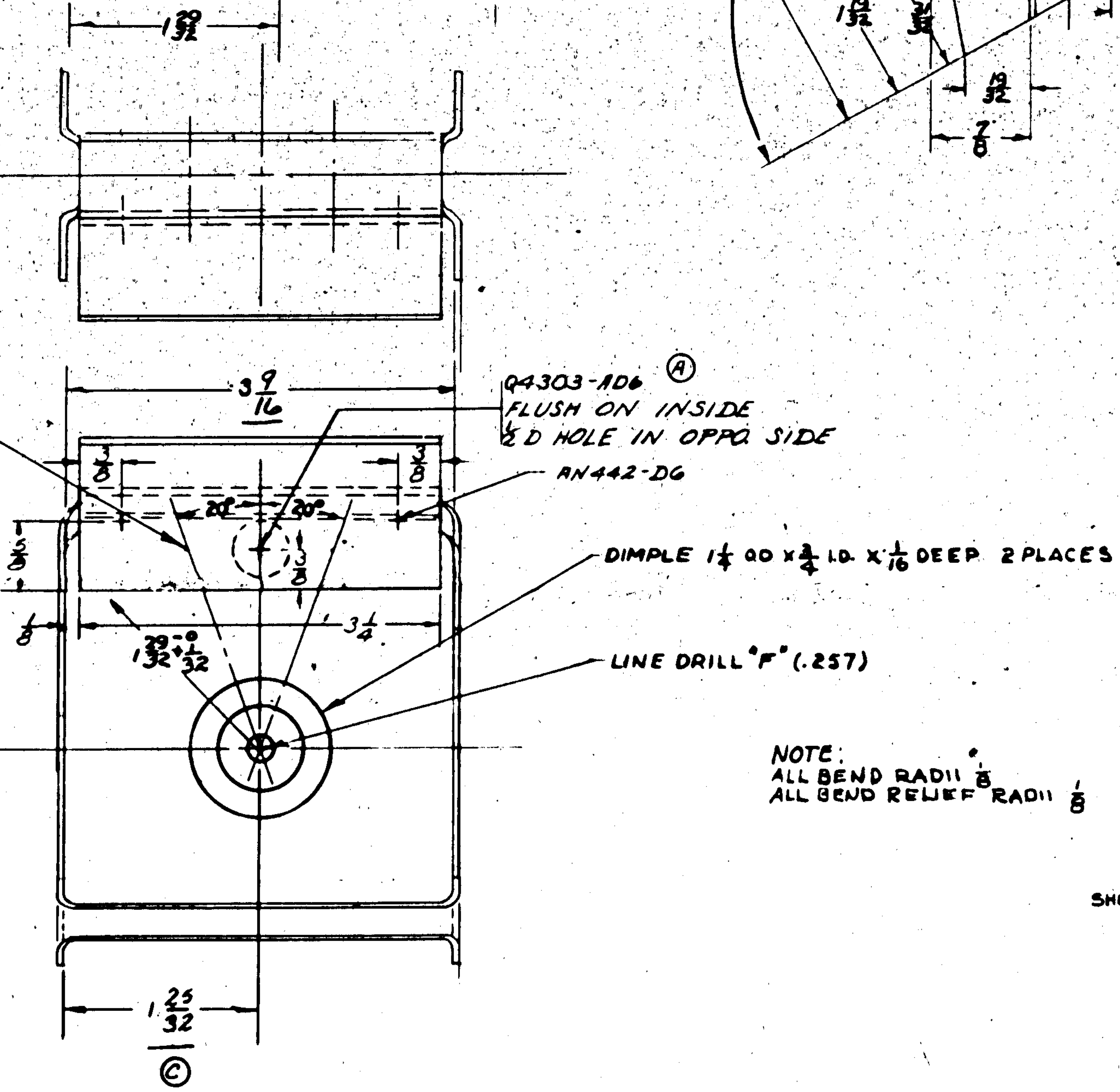

NOTE:
ALL BEND RADII 1/8
ALL BEND RELIEF RADII 1/8

OA-10
PBY-5A
285-AMC

LET	ALTERATION	DATE	BY	LET	ALTERATION	DATE	BY
A	ADDED -14, Q4303-AD6 & AN 442 D6 TO -7 SUB ASSY. ADDED -13, Q4303-AD6 & AN442-D6 TO -6 SUB ASSY.	9-10-41	Foster				
B	ADDED -15, Q4303-AD6 & AN 442-D6 TO -8 SUB ASSY	9-10-41	Foster				
C	CHANGED AN442-D4 RIVETS TO Q4303-AD4 IN -6 & 8 ASSY. 1 29/32 DIM. IN -7 WAS 1 25/32. L & R REQMENTS REMOVED FROM -7. HEAT TREAT ADDED FOR SO MATL.	9-10-41	Foster				
D	61° FOR -15 WAS 91° (TO WT CHG)	[illegible]	[illegible]				

SHIP #1 ONLY (-R, -L)
SHIPS #294 TO 300 & 310 & 314 (-R, -L)

ASSY DASH No	MODEL	NEXT ASSY	REQ
-R	285-AMC	28C5753	1
-L	285-AMC	28C5753	1
-R	PBY-5A	28C5753	1
-L	PBY-5A	28C5753	1

REQUIREMENTS PER AIRPLANE

REPLACES -6-8 ... -7 ... CALC WT
REPLACED BY ACT WT
SCALE 12"=1'0"
STAMP PART NUMBER WHERE SHOWN

PART No	STOCK	MATERIAL	SPEC	REQ -0 LH	REQ -0 RH	REQ -2 LH	REQ -2 RH	REQ -3 LH	REQ -3 RH	REQ -4 LH	REQ -4 RH	REQ -5 LH	REQ -5 RH
AN442-D6				1	1								
Q4303-AD6				2	2								
Q4303-AD4				2	2								
Q808-D4-20				3	2								
-15	Y2A45T x 3 1/4	ALCLAD-24ST	47A8 Cond T	1	1								
-11R	.064 x 6 1/2 x 10 1/4	ALCLAD 24SO	47A8-COND A		1								
-11L	.064 x 6 1/2 x 10 1/4	ALCLAD 24SO	47A8-COND A	1									
-8L	SUB-ASSY (RH OPPO.)												
AN442-D6				2	2								
AN442-D4				3	2								
Q808-D4-20				2	2								
Q4303-AD6				1	1								
-14	Y2A45T x 3 1/2	ALCLAD 24ST	47A8 Cond T	1	1								
-10	.064 x 5 1/2 x 9 3/4	ALCLAD 24SO	47A8 Cond A	1	1								
-7	SUB-ASSY												
AN442-D6				1	1								
Q4303-AD6				2	2								
Q4303-AD4				2	2								
Q808-D4-20				2	2								
-13	Y2A45T x 3 1/2	ALCLAD 24ST	47A8 Cond T	1	1								
-9R	.064 x 6 1/2 x 9 1/4	ALCLAD 24SO	47A8 Cond A		1								
-9L	.064 x 6 1/2 x 9 1/4	ALCLAD 24SO	47A8 Cond A	1									
-6L	SUB-ASSY (RH OPPO.)												
-8R	SUB-ASSY				1								
-8L	SUB-ASSY			1									
-7	SUB-ASSY			1	1								
-6R	SUB-ASSY				1								
-6L	SUB-ASSY			1									

PARTS LIST PER ASSY.

AC		DRAFT	CHECK	STRUCT	MAT	APPROV. / ENG
NAVY SR-59 ALL SO MATL.	Z-P-2AL	Jameson 9-9-41	Tomkins	Green	Klein 9-16-41 WFC	GC
HEAT TREAT	FINISH					

NAME ASSEMBLY - CONTROLS - PULLEY BRACKETS - SURFACE CONT STA. 5.0

OPP HAND 28C5754

SIZE G — DWG. 28C5754

CONSOLIDATED AIRCRAFT CORP. SAN DIEGO, CALIF.

LET	ALTERATION	DATE	BY
E.O. A24E70			
A	ADDED TRIM & FACE OF DWGS. AN515-D8-8(4), AN515-D8-12(6)	8-28-41	SALLEE
	AN365-D832(12) AN515-D8-4(2)		
B	REPLACED 2BC5758 WITH 2BC5758-1 & RELOCATED 2BC5760, 2BC5761 & 2BC5762 TO SUIT CONTROL INSTALL. ON FIRST PRV-SA	9-27-41	HAAK
C	CORRECTED PICTURE FOR 2BC5739 & ADDED NOTE ADDED AN515-D8-4(2) & AC365-D832(2)	10-8-41	HAAK
D	ITEM 2BC5761 & AN515D8-8(12 WAS 16) & AC365-D832(18 WAS 24)		
	WT. CHG. NEG.	11-14-41	KEESEE

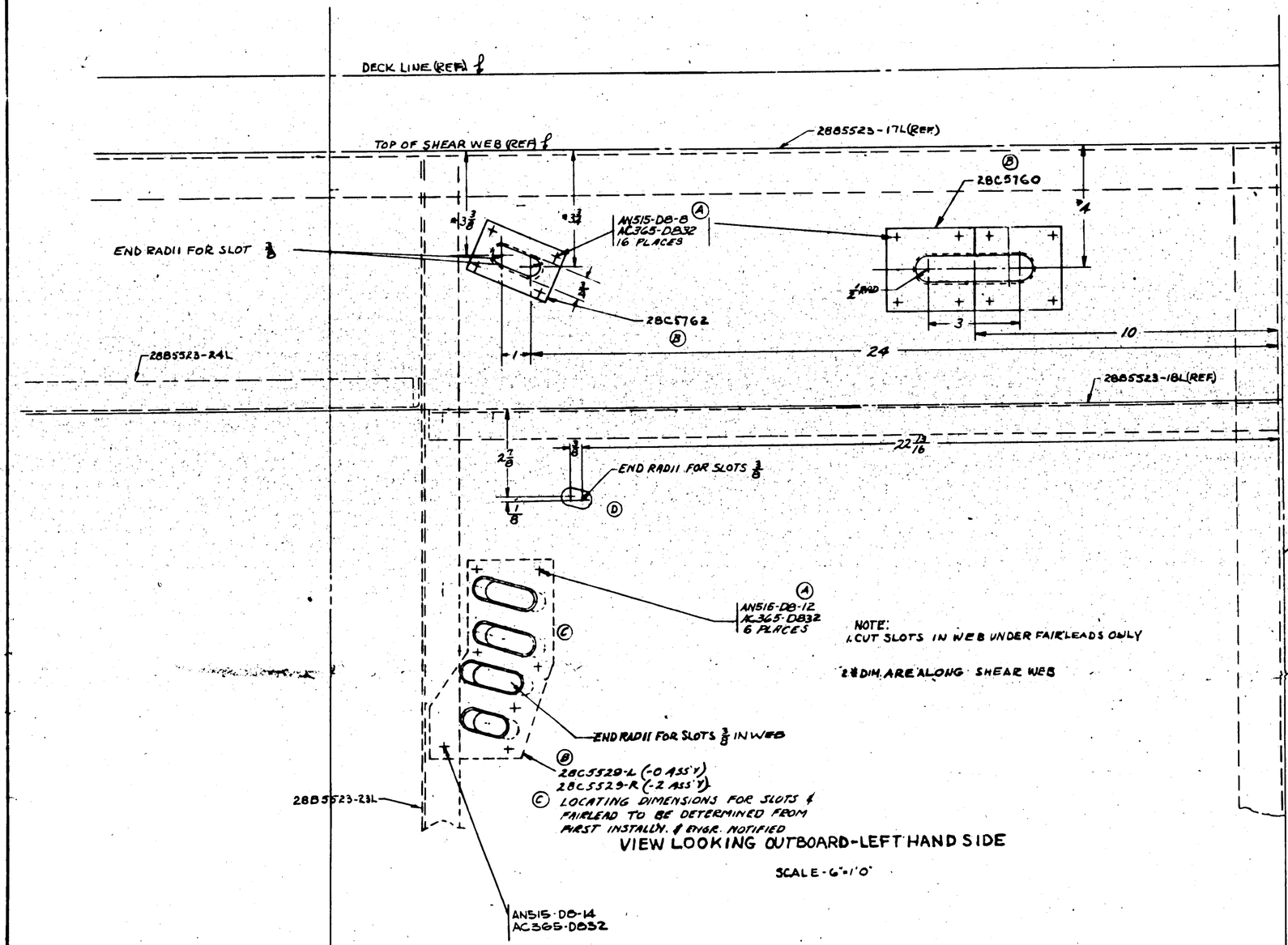

NOTE:
1. CUT SLOTS IN WEB UNDER FAIRLEADS ONLY
2. DIM. ARE ALONG SHEAR WEB

VIEW LOOKING OUTBOARD-LEFT HAND SIDE

SCALE - 6"=1'0"

WAS RUSH RELEASED 12-1-41

PART NO	STOCK	MATERIAL	SPEC.	LH RH REQ -0	LH RH REQ -2	LH RH REQ -3	LH RH REQ -4	LH RH REQ -5
AN515-D8-8				12				
AN515-D8-12				6	6			
AC365-D832				18	7			
AN515-D8-14				1	1			

ASST DASH NO.	MODEL	MAST ASSY	REQ.	PARTS LIST PER ASSY.
-2	PRV-SA	2BC5754	1	
-0	PRV-SA	2BC5754	1	
-2	28-10MM	2BC5728	1	
-0	28-10MM	2BC5728	1	
-3	28-5AMC	2BC5750	1	
-0	28-5AMC	2BC5750	1	
-2	PRV-SA	2BC5700	1	2BC5762 1
-0	PRV-SA	2BC5700	1	2BC5762 1
				2BC5760 1
				2BC5529-R 1
				2BC5529-L 1

C#88476 C#70496-77713

REQUIREMENTS PER AIRPLANE
REPLACED
REPLACED BY
SCALE 6"=1'0"
STAMP PART NUMBER WHERE SHOWN

AC						
NAVY NONE	NONE					
HEAT TREAT	FINISH	DRAFT	CHECK	STRUCT	MAT	APPROV
NAME INSTALLATION-CONTROLS-FAIRLEADS-SHEARWEB STA 42						
CONSOLIDATED AIRCRAFT CORP. San Diego, Calif.						

DEPT. HAND 2BC5758-2
DWG. G
SIZE 2BC5758

LET	ALTERATION	DATE	BY
A	"A" HOLES AN4-DD24A(2) AC365-D428(2) AN960D416(4) AN442D8 (WT. CHG. NEG)	6-3-42	
B	ADDED "D" DIA. 2 HOLES & 3/32 DIM. NEG. WT. CHG.	7-1-42	
C	ADDED 1/2 R CUTOUT TO -6 & DIM. 1 15/16 & 1/4, WT. CHG. NEG.	11-11-42	

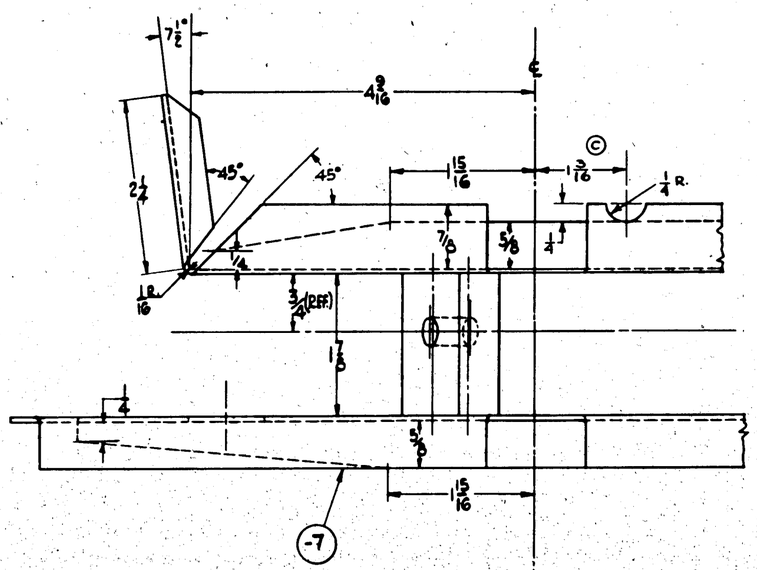

BRACKET SYMM. ABOUT THIS ℄ EXCEPT AS SHOWN

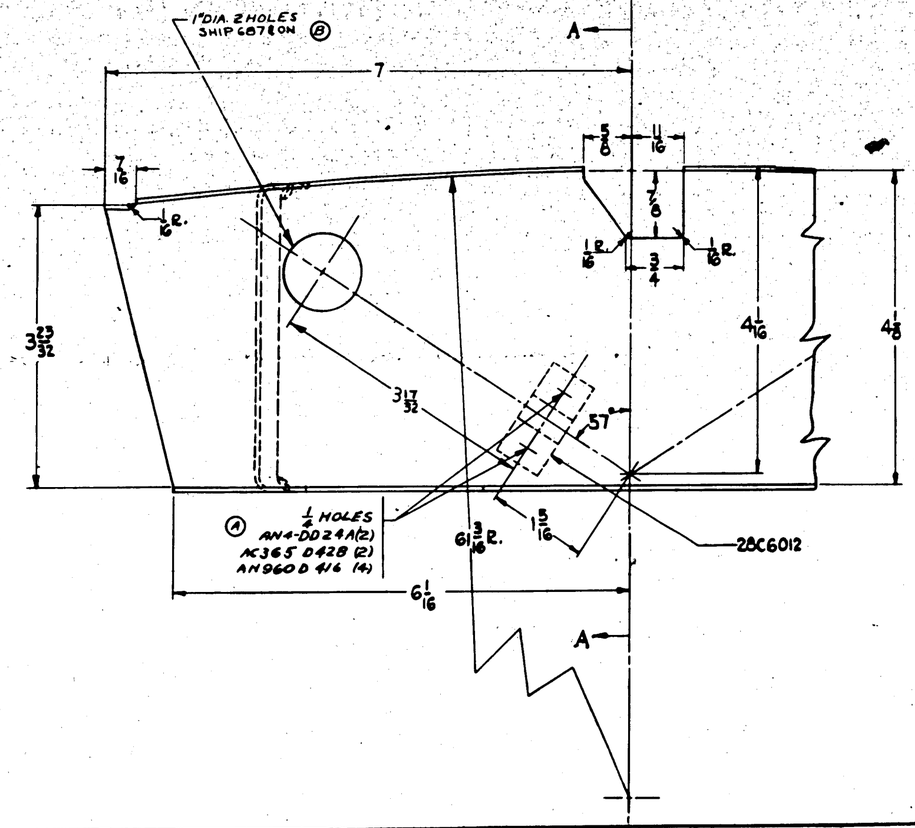

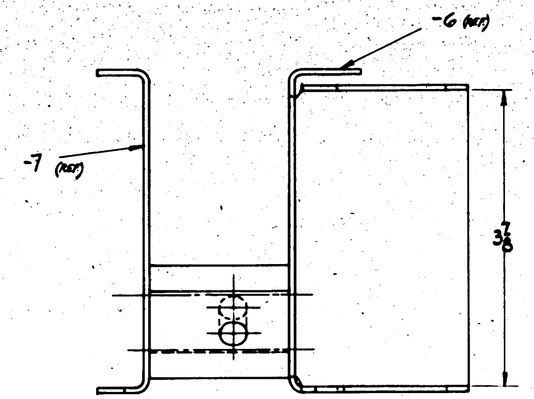

SECTION 'A-A'

NOTE:- ALL BEND RADII 3/32 EXCEPT OTHERWISE SPECIFIED

FINISH CODE	
Z	ANODIC TREATMENT
P	P.27 PRIMER
AP	ALUMINIZED PRIMER
C	CADMIUM PLATE

AN4-DD24A		4	
AN960-D416		6	
AC365-D428		4	
28C6012		2	
PRV-5	28C6014	1	
PRV-5A	28C6014	1	
ASSY. DRAW. NO.	MODEL	NEXT ASSY	REQ

REQUIREMENTS PER AIRPLANE

REPLACES																	
28C084																	
REPLACED BY																	
PART No	STOCK	MATERIAL	SPEC	LH	RH	LH	RH	LH	RH	LH	RH	LH	RH				
				REQ		REQ		REQ		REQ		REQ					
-7	.064 x 9 1/2 x 19	ALCLAD 24S	47AA COMB A	1													
-6	.064 x 10 x 18	ALCLAD 24S	47AA COMB A		1												
				-0		-2		-3		-4		-5					

PARTS LIST PER ASSY.

LINE ON DRAWING SHOWN EQUAL TO DIMENSION 1/32

SCALE 12" = 1'-0"

STAMP PART NUMBER WHERE SHOWN

A C		FAPPAS	STEVEN	GERBER	DATE	PRCHL	R. ALDRICH	
NAVY 3R53	Z-P-	11-12-41	12-5-41			2-10-42	WORLD	
HEAT TREAT	FINISH	DRAFT	CHECK	STRUCT	MTLY	APPROV	ENG	

NAME BRACKET ASSEMBLY-CONTROLS STA. 50 UPPER AILERON PULLEY

OPP. HAND -

CONSOLIDATED AIRCRAFT CORP. SAN DIEGO, CALIF

DWG. G

DWG. 28C6011

R

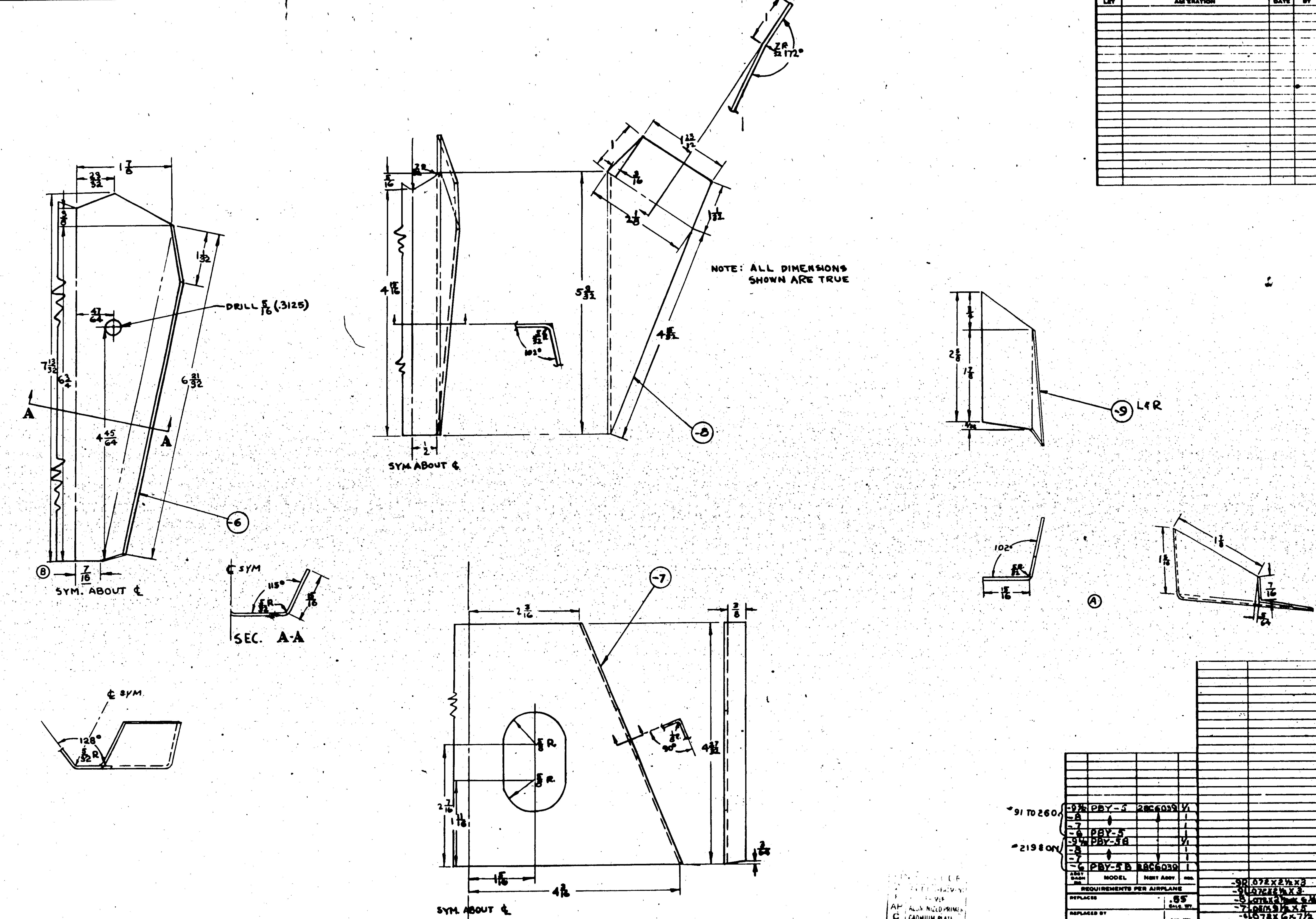

LET	ALTERATION	DATE	BY	LET	ALTERATION	DATE	NAME
				A	DIM'S 2 5/8 WAS 3 1/4, 3/4 WAS 1 1/8, 1 7/8 WAS 2 1/8, 1 5/16 WAS 1 7/16, 1 7/8 WAS 2 1/8 ∠ 102° WAS 95° IN B/M .072 X 2 1/2 X 3 WAS .072 X 2 5/8 X 4. WT. CH'G NEG.	10-10-42	HUNTER
				B	DIM. 7/16 WAS 1/2. WT. CH'G NEG.	10-10-42	HUNTER

GP GREEN PRIME

ASSY DASH NO.	MODEL	NEXT ASSY.	REQ.
-9 L/R	PBY-5	28C6039	1/1
-8	↕	↕	1
-7			1
-6	PBY-5		1
-9 L/R	PBY-5B		1/1
-8	↕		1
-7			1
-6	PBY-5B	28C6039	1

*91 TO 260 (-9 L/R to -6, PBY-5)
*219 & ON (-9 L/R to -6, PBY-5B)

REQUIREMENTS PER AIRPLANE

REPLACES — .55 CALC. WT.
REPLACED BY — ACT. WT.
LIMIT ON DIMENSIONS UNLESS OTHERWISE SPECIFIED ± 1/32 — SCALE 12" = 1'-0"
STAMP PART NUMBER WHERE SHOWN

PART No	STOCK	MATERIAL	SPEC.	REQ. -0
-9R	.072X2½X3	24ST AL.ALL	QQ-A-354	1
-9L	.072X2½X3	24ST AL.ALL	QQ-A-354	1
-8	.072X2½ [illegible]	24ST AL.ALL		1
-7	[illegible] 3½X5	24ST AL.ALL		1
-6	.072X6X7½	24ST AL.ALL	QQ-A-254	1

* PARTS LIST PER ASSY.

REQ -2 | REQ -3 | REQ -4 | REQ -5

A C		6-2-42	LINN	GERBER		ARM-STRONG	ZUCK
NAVY NONE	Z-P-GP	C. KIRK-WOOD	6-2-42	HITCHES 6-5-42	CUSTER	6-?-42	WOLD
HEAT TREAT	FINISH	DRAFT	CHECK	STRUCT	MAT	APPROV	ENG

NAME BRACKET-RUDDER CONT. FIN-PULLEY

CONSOLIDATED AIRCRAFT CORP. SAN DIEGO, CALIF

OPP. HAND —

DWG SIZE G — 28C6038

R 7/2/42

LET	ALTERATION	DATE	BY	LET	ALTERATION	DATE	BY

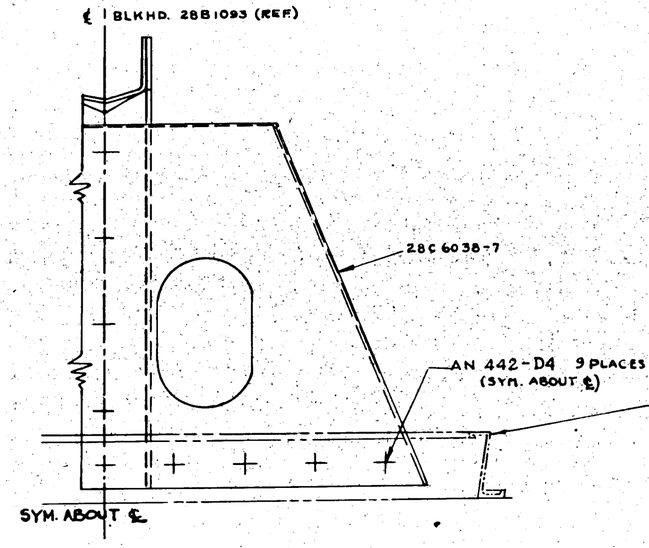

VIEW LOOKING AFT

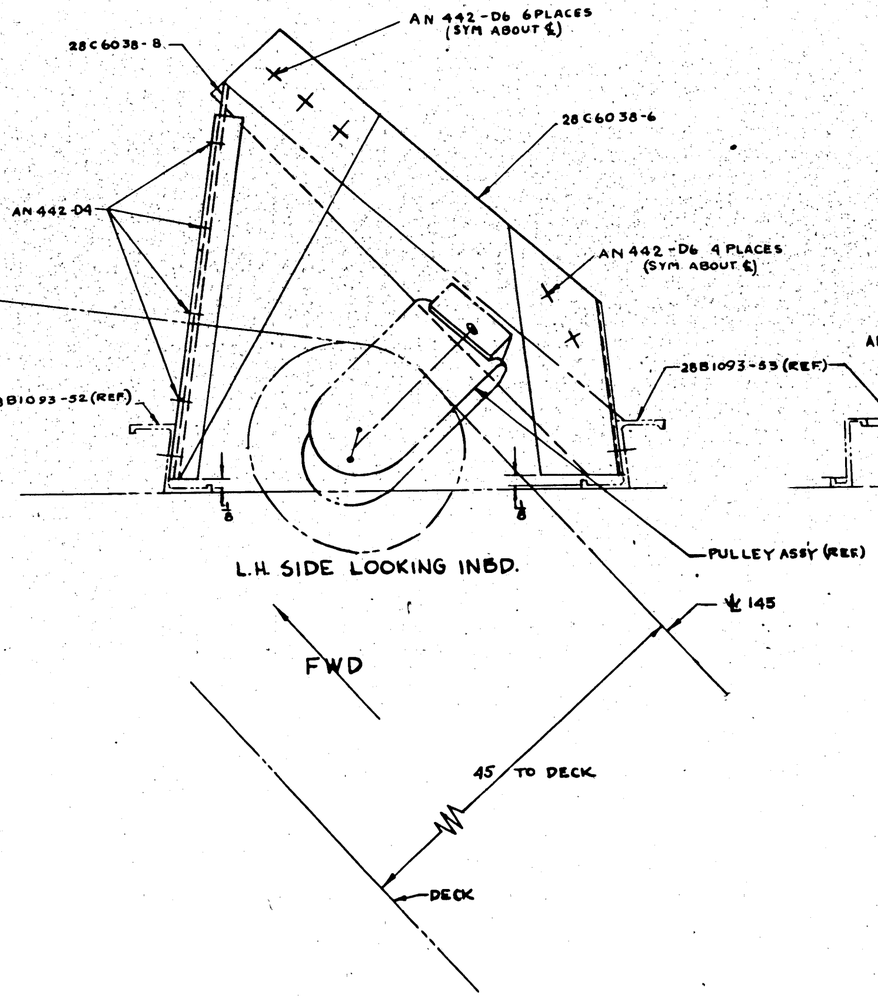

L.H. SIDE LOOKING INBD.

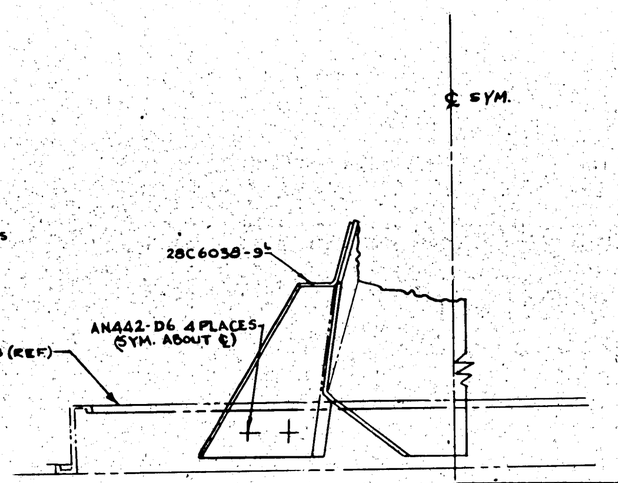

VIEW LOOKING FWD.

91876-91 ON 151 ON

-0	PBY-5	28B1093	1
-0	PBY-5B	28B1093	1
LAST DASH NO.	MODEL	NEXT ASSY	REQ.

REQUIREMENTS PER AIRPLANE

REPLACES — .57 CONS. WT.

REPLACED BY — ACT. WT.

LINES ON DRAWING SHOWN DRAWN TO SCALE 1/2 — SCALE 12"=1'-0"

STAMP PART NUMBER WHERE SHOWN

AN442-D6
AN442-D4

PART No	STOCK	MATERIAL	SPEC.	LH	RH	LH	RH	LH	RH	LH	RH	LH	RH
				REQ.		REQ		REQ		REQ		REQ	
PARTS LIST PER ASSY.				-0		-2		-3		-4		-5	
28C6038-9				1									
28C6038-8						1							
28C6038-7								1					
28C6038-6										1			

A C			LINN	ORDER		APPROVED	ZUCK
NAVY			C. KIRKLAND	2-2-42			
HEAT TREAT	FINISH	DRAFT	CHECK	12-15-42	CUSTER	MAT	7-21-43

NAME INSTALL- PULLEY BRKT- RUDDER CONTROL FIN.

CONSOLIDATED AIRCRAFT CORP. San Diego, Calif.

OPP. HAND — SIZE G — DWG. NO. 28C6039

FR 7-6-42

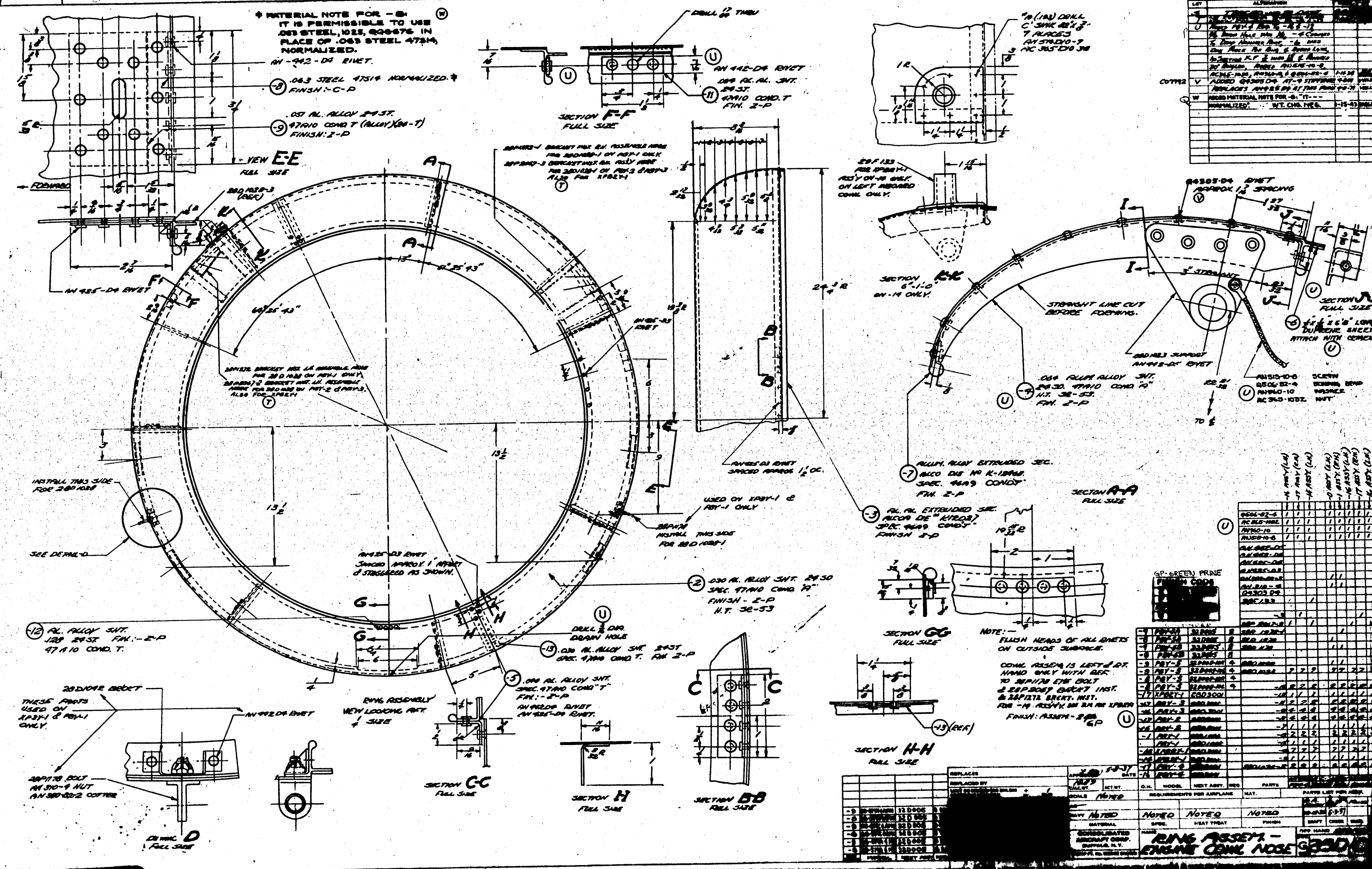

NOTE:—
FLUSH HEADS OF ALL RIVETS ON OUTSIDE SURFACE.

COWL ASSEM. IS LEFT & RT. HAND ONLY WITH REF. TO 28P1178 EYE BOLT & 28P2067 BRCKT INST. & 28P1272 BRCKT. INST. FOR -14 ASS'Y, SEE B.M. FOR XPB2Y-1

FINISH: ASSEM - Z-P GP (U)

GP - GREEN PRIME

FINISH CODE [redacted]

LET	ALTERATION		
S	TRACED AND RE-DATED		
T	[illegible]		
U	ADDED PBY-? ... TO -15 & -17; 3/16 DRAIN HOLE WAS 1/8; -4 CHANGED TO DROP HAMMER PART, -6 WAS ONE PIECE FOR BUY & BONDED LOWER; IN SECTION F-F 7/16 WAS 1/2 & ADDED 30° BEVEL, ADDED AN515-10-8, AC365-1032, AN960-10 & Q506-B2-4	1-11-38	
V (CO7792)	ADDED Q4305-D4 AT -4 STIFFENER. REPLACES AN425 D4 AT THIS POINT	4-20-?? 10-21	
W	ADDED MATERIAL NOTE FOR -8: "IT--- NORMALIZED". WT. CHG. NEG.	1-15-43	

Parts list (quantities per assembly):

	-16 ASSY (LH)	-17 ASSY (RH)	-14 ASSY (LH)		-0 ASSY (LH)	-1 ASSY (RH)	-16 ASSY (LH)	-17 ASSY (RH)	-16 ASSY (LH)	-17 ASSY (RH)
Q506-B2-4	1	1	1		1	1	1	1	1	1
AC365-1032	1	1	1		1	1	1	1	1	1
AN960-10	1	1	1		1	1	1	1	1	1
AN515-10-8	1	1	1		1	1	1	1	1	1
AN442-D5										
AN442-D4										
AN425-D4										
AN425-D3										
AN380-D2-2					1	1				
AN310-4					1	1				
Q4305 D4										
29F133	1		1							
-3		1							1	
28P2067-2	1		1					1		1
28D1028-1						1				
28D1028					1					
28D1178					1	1				
28D1092					1	1				
28D1032	2	2	2		2	2	2	2	2	2
-18	2	2	2		2	2	2	2	2	2
-12	1	1	1		1	1	1	1	1	1
-11	2	2	2		2	2	2	2	2	2
-9	4	4	4		4	4	4	4	4	4
-8	4	4	4		4	4	4	4	4	4
-7	1	1	1		1	1	1	1	1	1
-6	2	2	2		2	2	2	2	2	2
-5	1	1	1		1	1	1	1	1	1
-4	2	2	2		2	2	2	2	2	2
-3	1	1	1		1	1	1	1	1	1
28D1026-2	2	2	2		2	2	2	2	2	2

O.N.	MODEL	NEXT ASSY.	REQ.
-9	PBY-5A	32D005	8
-8	PBY-5A	32D005	8
-9	PBY-5B	32D005	8
-8	PBY-5B	32D005	8
-9	PBY-5	32D005-[illegible]	4
-8	PBY-5	32D005-[illegible]	4
-8	PBY-5	32D005-[illegible]	4
-8	PBY-5	32D005-[illegible]	4
-17	XPB2Y-1	28D3001	
-17	PBY-3	[illegible]	
-16	PBY-3	28D3001	
-17	PBY-2	[illegible]	
-16	PBY-2	[illegible]	
-1	PBY-1	[illegible]	
	PBY-1	[illegible]	
-16	XPBY-1	[illegible]	
-16	XPBY-1	[illegible]	
-17	PBY-4	[illegible]	
-16	PBY-4	[illegible]	

-9	28-SPINNER	32D005	[redacted]
-8	28-SPINNER	32D005	[redacted]
-9	28-[illegible]	32D005	[redacted]
-8	28-[illegible]	32D005	[redacted]
-9	28-[illegible]	32D005	[redacted]
-8	28-[illegible]	32D005	[redacted]
	FORMERL	NEXT ASSY	

REPLACES
REPLACED BY
[redacted]

APPROVED 5-3-37 DATE
CALC. WT. ACT. WT.
SCALE NOTED
NAVY NOTED — MATERIAL
NOTED — SPEC.
NOTED — HEAT TREAT
NOTED — FINISH
REQUIREMENTS FOR AIRPLANE
MAT.
PARTS
PARTS LIST FOR ASSY.
DRAWN 5-3-37 DRAFT CHECK [illegible]

CONSOLIDATED AIRCRAFT CORP. BUFFALO, N.Y.

NAME RING ASSEM. — ENGINE COWL NOSE

G 28D[illegible]

SECT	X	Y
A-A	2	1 1/8
B-B	1 3/8	1 1/8
C C	13/16	1 1/8
D D		1 1/8
E E		13/16
F F		7/8
G G		1 1/16
H H	15/16	7/8
J J	1 1/16	1 1/8
K K	15/16	1 1/8
L L	1/2	1 1/2

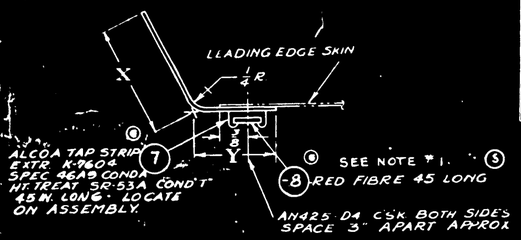
LLADING EDGE SKIN
X
1/4 R
Y
7/8
(7) ALCOA TAP STRIP E.XTR. A-7604 SPEC. 46A9 COND A HT. TREAT SR-53A COND T 45 IN. LONG - LOCATE ON ASSEMBLY.
(8) RED FIBRE 45 LONG
SEE NOTE "1."
AN425-D4 CSK BOTH SIDES SPACE 3" APART APPROX

TYPICAL SECTION

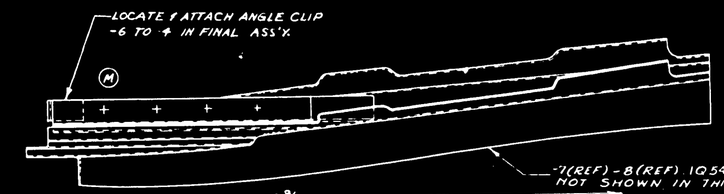

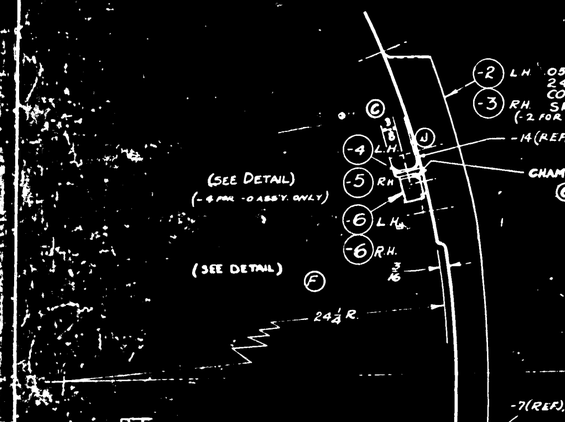
(-2) LH .050 AL.AL SHEET 2450 - SPEC 47A10 COND'A' - HT. TREAT SR.83A COND 'T' (-2 FOR -0 ASSY. ONLY)
(-3) RH
-14 (REF.)
(-4) L.H.
(-5) RH
CHAMFER 45° X 3/32
(SEE DETAIL) (-4 FOR -0 ASS'Y. ONLY)
(-6) L.H.
(-6) R.H.
(SEE DETAIL)
24 1/4 R
-7(REF), -8(REF) NOT SHOWN IN THIS VIEW

DETAIL -4 & -5
SCALE 12"-1'-0"

NOTES
1. IT IS PERMISSIBLE TO SUBSTITUTE MICARTA PACKING STRIP FOR RED FIBER STRIP
2. -4 & -5 MAY BE MADE FROM:
   A). .091 X 1 1/2 X 9, 24ST. ALCLAD, SHT, SPEC. QQ-A-362 CONDT., OR
   B) K78C X 9, 24ST ALCLAD, SPEC 46A9 COND T
3. -6L & -6R MAY BE MADE FROM:
   A). .091 X 7/8 X 17 7/8, 24ST. ALCLAD SHT, SPEC. QQ-A-362 COND T, OR
   B) K1288 X 7/8, 24ST. AL. ALL., SPEC 46A9 COND T

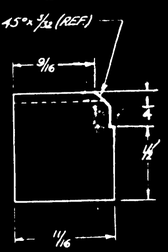

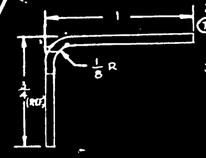

DETAIL -6L/R SCALE-2"=1'0"

LET	ALTERATION	DATE	BY
	B TRACED	8-23-40	DUNCAN
EQ27282	C ADDED CHAMFER 45°X 3/32 TO -6 & MOVED TO TOE OF -4 ADDED DIM.	11-14-40	HELTMAN
E O 30275	D CUT OUT PIECE OF TAPPING STRIP & FIBRE - REMOVED -7 & -8 & ADDED & NEW NUMBERS -9-10-11-12	12-3-40	WRIGHT
EO. 33776, PBY-5	E 1/8 DIMEN. ADDED, PBY-5 APPLD TO	4-10-41	FERNEAU
28-5 - PBY-5 - E.O. A3738	F MODELS ADDED DRG. - ASS'Y -6 R/H & -6 L/H	9-11-41	HELTMAN
	G REPLACED -9, -10, -11 & -12 WITH -7, & -8	12-26-41	[illegible]
E.O. A15896	H RELOCATED DZUS SPRING	11-24-41	[illegible]
	J CREATED -15 ASS'Y. ADDED 28D2025-14 TO FACE # B/M	12-26-41	[illegible]
E.O. A29283	K REMOVED 1/8 DIM. ADDED DIM. 7/8 & 45° & OF DZUS FASTNR. SPRINGS. NO WT. CHG.	3-29-42	[illegible]
E.O. "A 31568	L DIMS. (1 PLACE) 3/4 WAS 4/8, 1/8 WAS 1/4, 6 7/8 WAS 7, 3/4 WAS 7/8. WT. CHG. NEG.	4-28-42	[illegible]
E.O. "A37341	M REMD "AN425-D4 CSK THIS SIDE" & DIMS 3/32 1/4 & 3/8 & ADDED AN425-D4 CSK. FACE SIDE (1) "& DIM. 3/8, & NOTE "LOCATE - - - ASS'Y (NEG. WT. CHG.)	5-13-42	[illegible]
	N RELOCATED DZUS HOLES 9 3/8 DIM. WAS 9 1/2 - 16 9/32 WAS 16 3/4, 1/8 WAS 1/2 ADDED # 1/16 & 16 9/32 DIM. NO WT. CHG.	5-25-42	[illegible]
EO "A 44762	P CHGD. DIM. 1/8 WAS 3/4, 1 3/4 WAS 1 1/2 & 1/2 WAS 3/4 WT. CHG. NEG.	6-23-42	[illegible]
ROHR E O 818A	Q AN420-D4 WAS AN430-4 AND WITCH	8-8-42	[illegible]
ROHR EO. 1330	K ADDED 3/8 DIM. REMOVED 2.8 DIM. NOT CHGD. REQ.	11-6-42	[illegible]
	S ADDED NOTE "5" (NEG. WT. CHG.)	11-6-42	[illegible]
	T FOR -4 & -5 ADDED DETAIL VIEW TO FACE. REMOVED NOTE. FOR -6 L & R CORRECTED SCALE OF DETAIL AND ED. VIEW. REMOVED NOTE. ADDED TO FACE MATL NOTE & B. WT. CHG. NEG.	3-23-43	[illegible]
	U DIM. 16 3/4 WAS 16 3/8 - 3 PLACES NO WT. CHG	5-25-43	[illegible]

FRONT SPAR

-1	PBY-5A	28D2006	1
-1	28-5AMN, 5MC	28D2006	1
-15	28-5AMN	28D2006	1
-0	AMN		2
-15	AMC		1
-0	AMC		2
-1	MN		2
-0	MN		2
-1	ME		2
-0	ME		2
-1	MC		2
-0	MC		2
-1	MA		2
-0	28-5MA		2
-1	PBY 5A		1
-0	PBY-5B	28D2006	2
-0	PBY-5C	28D2006	2
-1	PBY-4	28D2006	
-1	PBY-3	28D2006	
-1	PBY-2	28D2006	

O. No.	MODEL	NEXT ASSY.	REQ	STD PARTS	MAT	REQ	PART NO.	LH REQ.	RH REQ.
							10540-4	6	6
							28D2025-14	1	1
							-8	1	1
							-7	1	1
							-6 R	1	
							-6 L		1
-1	PBY-3	28D2006		AN442D4		12	-5	1	1
	PBY-4	28D2006	-	AN960-4			-4	1	1
-1	PBY-2	28D2006		AN525-D4			-3	1	
	PBY-2	28D2006		AN525-D4			-2		1
							28D2025	1	1

REQUIREMENTS PER AIRPLANE

A/C	MATERIAL	SPEC.	HEAT TREAT	FINISH
NAVY	NOTED	NOTED	NOTED	Z-P-2AL

DRAFT	CHECK	EXAM.	ENG.
ZIRBEL	[illegible]	[illegible]	

CONSOLIDATED AIRCRAFT CORP. SAN DIEGO, CALIF.

NAME: FLANGE ASSEMBLY COWL-ENGINE NACELLE

OPP. HAND 28D2025-[illegible]

DWG NO. 28D2025

SIZE G

28W206 65,66,71 27-5W-1 APPROVED 2-25-40 DATE

1/8 SCALE

1/64 SCALE

1/4 & FULL SCALE

FINISH	
Z	ALODINE 1201 OR 1132
P	P-23 PRIMER
AP	ALUMINIZED PAINT
C	CADMIUM PLATE

LET	ALTERATION	DATE	BY
A	VAS Q4803 D4 RIVETS		
B	TRIMMED FLANGE ADDED		
	DIMS 1⅞ & ⅝ NEG. WT CHG.		
C	ADDED #10 HOLE & 1¼ DIM. Q5088-6		
	Q5106-D10-8 & AC372-D1032 ADDED		
D	ADDED DIMS 1⅛ & ⅛ & ⅜ & ¼ - DRILL NOTES "4 HOLES - BOTTOM FLANGE" & #10 DRILL (3 HOLES) WT CHG. NEG.		

LET	ALTERATION	DATE	BY

SPOTWELD TO -6 FINISH Z-P AFTER SPOTWELDING

DRILL #10 (.193) HOLE TO CONFORM TO CONTOUR OF FLAP

Q508B-6(1)
Q5106-D10-8(1)
AC372-D1032(1)

4 HOLES (#30) (EQUALLY SPACED ALONG BOTTOM FLANGE)

#10 DRILL (3 HOLES)

℄ HINGE

FAIR LINE THRU 5 POINTS

Q4803 D4 RIVET

⅜ (MICARTA)

NOTE-
ALL BEND RADII ⅛ R.

AN 425-3 RIVETS
LOCATE APPROX. AS SHOWN
℄ EDGE DISTANCE, DRIVE
FLUSH, BOTH SIDES.

SECTION A-A

24 R.

FINISH Z-P AFTER SPOTWELDING

BEND LINE FOR -7

SYM. ABOUT ℄

½ JOGGLE

℄ HINGE

DRILL #10 (.193) 2 HOLES

FINISH CODE	
Z	ANODIC TREATMENT
P	P.27 PRIMER
AP	ALUMINIZED PRIMER
C	CADMIUM PLATE

C-91876 90626180N	-7LR	PBY-5	28D5054	2 EA
	-8LR	PBY-5	28D5054	1 EA
C-13595	-9LR	PBY-5A	28D5054	1 EA
	-7LR	PBY-5A	28D5054	1 EA

AN 425-3

ASSY DASH NO.	MODEL	NEXT ASSY.	QTY.
	28 - 5AMN	28D5000	2
	PBY - 5B	28D5000	2
	28 - 5ANC	28D5000	2
	28 - 5MN	28D5000	2
	28 - 5ME	28D5000	2
	28 - 5MC	28D5000	2
	28 - 5MA	28D5000	2
	PBY - 5A	28D5000	2
	PBY - 5	28D5000	2

Q4803 D4

Q508B-6
Q5106-D10-8
AC372-D1032

ALL CONT'S EXCEPT C-13595
C-70496
C-91876
91-89
#W-260

REQUIREMENTS PER AIRPLANE

REPLACES

REPLACED BY

ASSY. QTY.

SCALE 12" = 1'-0"

STAMP PART NUMBER WHERE SHOWN

PART No.	STOCK	MATERIAL	SPEC.	LH REQ. -0	RH REQ. -2	LH REQ. -3	RH REQ. -4	LH REQ. -5	RH REQ. -6
-2	.032 x 3¾ x 11	ALCL 24ST	4TA4 COND T	1					
-3R	.032 x 3¾ x 6	MICARTA	MP5 PB6			1			
-5R	.032 x 3¾ x 6	MICARTA	MP5 PB6					1	
-7LR	.064 x 2¾ x 4⅞	ALCL 24ST	4TA4 COND T	1					
-7LRN	.064 x 2¾ x 4⅞	ALCL 24ST	4TA4 COND A	1					
28D5003-9	.064 x 2¾ x 4⅞	ALCL 24ST	4TA4 COND A	1					

PARTS LIST PER ASSY.

AC			12-11-39	MFG. APPROVAL			
NAVY SR.53	NOTED & AP INSIDE OUTSIDE		12-11-39	DRAFT	CHECK	STRUCT	MAT.
HEAT TREAT	FINISH						

NAME FLAP ASSEM. TOP COWL

CONSOLIDATED AIRCRAFT CORP. SAN DIEGO, CALIF.

OPP. HAND

SIZE G

DWG. 28D5003

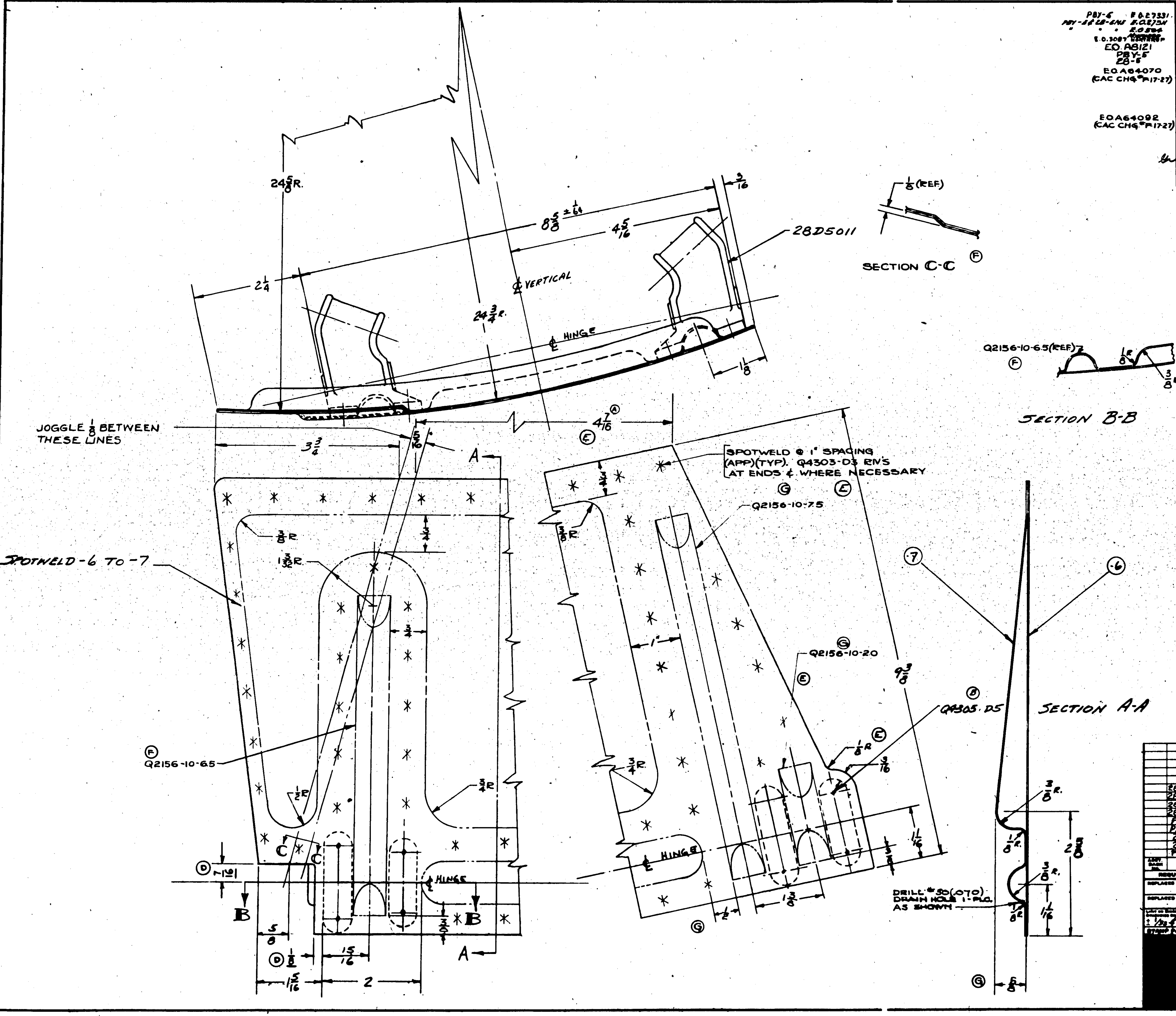

PBY-6 E.O.27331
PBY-5A 28-5AN5 E.O.27314
E.O.504
E.O.3087
E.O. A8121 PBY-5 28-5
E.O.A64070 (CAC CHG #F17-27)
E.O.A64092 (CAC CHG #F17-27)

LET	ALTERATION	DATE	BY	LET	ALTERATION	DATE	BY
A	REVISED DRAWING	11-13-40					
B	[illegible] Q4305-D5 [illegible]						
C	ADDED 1 DRILL HOLE #50(.070)						
D	7/16 WAS 3/8 & 1/8 WAS 3/16	4-18-41					
E	1/4 WAS 1/8. ADDED 1/8 & 3/16 R ADDED AN442-3 RIVETS. 4 7/16 WAS 5 1/16						
F	REM'D DIMS 1/2 & 1/2R ADDED Q2156-10-6.5(1), SECT. "C-C" & DIMS. 3/8R, 1 3/32R, 3/4(2), 3/4R & 1/2R. REM'D SECT. "B-B" & ADDED NEW SECT. "B-B" NO WT. CHG.	11-12-42	JEPSEN				
G	ADDED Q2156-10-7.5(1) Q2156-10-20(1), DIMS 3/8R, 1", 3/4R, 1/2, 1 3/8; & NOTE "SPOTWELD ---- NECESSARY" IN SECT. "A-A" 5/8 WAS 7/16. NO WT. CHG.	11-12-42	JEPSEN				

GP - GREEN PRIME

FINISH COL	
Z	ANODIC TREATM.
P	P-27 PRIMER
AP	ALUMINIZED PRIMER
C	CADMIUM PLATE

FINISH -6 & -7 Z-P AFTER WELDING.

MODEL	NEXT ASSY.	REQ.
28-5AMN	28D5000	2
28-5AMC	28D5000	2
28-5MN	28D5000	2
28-5MC	28D5000	2
PBY5B	28D5000	2
PBY5A	28D5000	2
28-5ME	28D5000	2
28-5MA	28D5000	2
PBY5	28D5000	2

REQUIREMENTS PER AIRPLANE

PART No.	STOCK	MATERIAL	SPEC.	REQ. -0
Q4303-D3				
Q4305-D5				8
28D5011				2
28D5007-7	.032 x 14 x 16	24SO ALC.	47A8-A	1
28D5007-6	.032 x 9 x 12	24ST ALC.	47A8-T	1

PARTS LIST PER ASSY.

REPLACES: | CALC. WT. .86
REPLACED BY: | ACT. WT.
LIMITS: ± 1/32 & NOTED | SCALE 12" = 1'0"
STAMP PART NUMBER WHERE SHOWN

A C | NAVY .50 MAT'L 3E-E3 | HEAT TREAT
NOTED & AP INSIDE, P OUTSIDE | Gr P FINISH
DRAFT 12-5-38 | CHECK | STRUCT. | MAT. | APPROV.
OPP. HAND

NAME: FLAP ASSEMBLY BOTTOM COWL

CONSOLIDATED AIRCRAFT CORP. SAN DIEGO, CALIF.

DWG. SIZE G | 28D5007

LET	ALTERATION	DATE	BY
A	REDESIGNED TO SUIT RELOCATION OF BOP-ENG STARTER CRANK BEARING (REPLACED 88P3020-4)	1-7-43	[illegible]
B	-6 -.060 ALC SHEET (.040 MIN) -6 .016 STL'S STEEL SHEET (.013 MIN) WAS RIVETS FOR ATT'CH'G -6 TO MEMBER	11-5-43	MENGEL
C	ADDED Q4305-03 RIVETS & NOTE	12-24-43	GRAY
D	ADDED -12 ASSEM. PBY5A & -11 WASHER	4-[illegible]-44	KAGEL
E	ADDED -14, -15 ITEMS -1 & -2 ASSY'S & DELETED -8 & -9 RIVETS & NOTE	1-8-45	[illegible]
F	-8 (-2 ASSY) WAS STAT-T	12-21-[illegible]	[illegible]
G	PBY5B(-0 W/MC-8), NO WT. CHG.	11-12-[illegible]	MORE

S.O. 2.5376
NORTHRUP S.O. 2359
S.O. #2432
AMP A.C. ENG. #A49260

#FA-56 FASTENER STL'S STEEL
#502 GROMMET
3M113-3 HOLE

SECTION D-D
SCALE 12"=1'0"

SECTION A-A
SCALE 12"=1'0"

SECTION B-B
SCALE 12"=1'-0"

SECTION E-E (-2 ASSY ONLY)
SCALE 12"=1'0"

DETAIL -15 (-2 ASSY ONLY)
SCALE 12"=1'0"

ASSY DASH NO.	A	B
-0	10 5/32	7 9/32
-2	9 1/32	6 15/32

DETAIL OF -11
SCALE -12"=1'0"
THIS PART IS IDENTICAL TO 28D3006-7 REF.

SECTION C-C
SCALE 12"=1'0"

NOTE
FINISH -6, P-AP ⓑ BEFORE SPOTWELDING
NO FINISH ON -11
FINISH ALL OTHER PARTS Z P-AP
BENDS 1/8 R. UNLESS NOTED
H.T.-7-8,-10&-14 SR 53

FINISH CODE	
Z	ANODIC TREATMENT
P	P-07 PRIMER
AP	ALUMINIZED PRIMER
C	CADMIUM PLATE

PART NO.	STOCK	MATERIAL	SPEC.	-0 REQ.	-2 REQ.	-3 REQ.	-4 REQ.	-5 REQ.
Q4305-D3				12	12			
Q4307-D5								
AN380-C2-2				1	1			
Q4303D5								
AN380-7				1	1			
AN23-9				1	1			
27007AL13-064				1	1			
Q4303D4								
Q4307-D4								
Q4305-D3								
-0 PBY-5B 28BP3000 2	FA56	DZUS		4	4			
-2 PBY-5A 2	#502	DZUS		4	4			
-0 PBY-5A 2								
-0 28-5AMG 2	-15	A11281=3 1/8	AL.AL. EXT.	47AB-T	2			
-0 28-5AMN 2								
-0 28-5MN 2	28P5053			1	1			
-0 28-5ME 2								
-0 28-5MG 2	-14	.051 x 3 1/2 x 16 1/2	ALC SHT	47AB "A"	1			
-0 28-5MA 2	-13	.040 x 16 1/2 x 47 1/8	ALC SHT	47AB "T"	1			
-0 PBY-5 28D3000 2	-12	K781 x 3/8	ALAL EXT	61AB-T	4			
	-11	.025 x 2 x 3	STEEL ST. SHT	4130	1			
	-10	.051 x 5 3/8 x 47 1/2	ALC SHEET	47AB A	1			
	-9R	K11624 x 1/8	ALAL EXT	61AB-T	1			
	-9L	K11624 x 1/8	ALAL EXT	61AB-T	1			
	-8	.040 x 2 1/4 x 18 1/4	ALCLAD SHT	24SB "A"	1			
	-7	.040 x 2 1/4 x 17 1/4	ALCLAD SHT	24SB A	1			
	-6	.040 x 18 1/2 x 18 3/4	ALC SHEET	24SB T	1			

PARTS LIST PER ASSY.

MATERIAL	HEAT TR	FINISH	DRAFT	CHECK	STRUCT	MAT	APPROV	ENG
A.C.	NAVY NOTED	NOTED	12/19/39					

NAME PANEL ASSEMBLY-NACELLE COWL-UPPER
CONSOLIDATED AIRCRAFT CORP. SAN DIEGO, CALIF.
CODE IDENT. NO. 81205
SIZE G
DWG. NO. 28D5015

R 28D5015

LET	ALTERATION	DATE	BY
A	-11 & R WAS -11 ADDED P/N 28D1049-15 HINGE PIN (J) -11 & R PART ASS'Y AND P/N		
B	Q4305-D4 WAS Q4305-D5 ADDED Q4305-D8 TO END OF -15 & -17 -16 & -7. ADDED Q4305-D3 TO EACH END OF -6		
C	ADDED AS R. TO LOWER APT CORNER		
D	REMOVED DZUS FASTENERS, 5/8 D GROMMETS (4) ADDED		
E	ADDED CUTOUTS, Q4308-D5 WAS Q4305-D4		
F	ADDED -19 FOR UPPER HALF OF -15		
G	1/4 WAS 5/16, 3/4 WAS 7/8, ADDED 1/4 DIA HOLE		
H	-20 FILLER WAS -19		
J	28D1049-15 WAS 28D1049-13		
K	5/16 WAS 1/4, 1 3/16 WAS 1 1/16, HOLE 3/16 DIA ADDED Q4308-D5 RIVET AT END OF -16 AND ALSO ALONG -18.		
L	OMIT RIVETS Q4305-D4 WHICH ATTACH HINGE TO PANEL, ALL Q4305-D3 RIVETS AS NOTED - FOR MODEL PBY-5		

LET	ALTERATION	DATE	BY
A	-11 & R WAS -11 ADDED P/N 28D1049-15 HINGE PIN (J) -11 & R PART ASS'Y AND P/N	4-24-41	A.L.M.G.
B	Q4305-D4 WAS Q4305-D5 ADDED Q4308-D5 TO END OF -15, -17 -16 & -7. ADDED Q4305-D3 TO EACH END OF -6	9/16/40	H.H.G.
C	ADDED AS R. TO LOWER APT CORNER	11/7/40	H.H.G.
D	REMOVED DZUS FASTENERS, 5/8 D GROMMETS (4) ADDED	9/7/40	H.H.G.
E	ADDED CUTOUTS, Q4308-D5 WAS Q4305-D4	11/8/40	H.H.G.
F	ADDED -19 FOR UPPER HALF OF -15	1/6/40	H.H.G.
G	1/4 WAS 5/16, 3/4 WAS 7/8, ADDED 1/4 DIA HOLE	1/6/40	H.H.G.
H	-20 FILLER WAS -19	1/6/40	H.H.G.
J	28D1049-15 WAS 28D1049-13	1-2-41	H.H.G.
K	5/16 WAS 1/4, 1 3/16 WAS 1 1/16, HOLE 3/16 DIA ADDED Q4308-D5 RIVET AT END OF -16 AND ALSO ALONG -18.	1-2-41	H.H.G.
L	OMIT RIVETS Q4305-D4 WHICH ATTACH HINGE TO PANEL, ALL Q4305-D3 RIVETS AS NOTED - FOR MODEL PBY-5	4-10-41	H.H.G.

-18 HINGE ON DOOR MAKE FROM HINGE SECTION Y56A10T

CUT -18 HINGE LUG AS SHOWN DO NOT MOVE HINGE LOCATION.

HINGE HALF ON PREHEATER (28P5003-33)

28D1049-15 HINGE PIN (J)

2½ TRUE

Q4305-D3

-7 1½ x 1½ x 5/8 TEE SPOTWELD TO -10

-16 1½ x 5/8 x 1/16 TEE SPOTWELD TO -9

-8 MAKE FROM 5/8 x 5/8 x 1/16 ANGLE SPOTWELD TO -9

-9 ALCLAD SHT.

-10 LOUVRE H.T. SR53

-11R

-11L REINF.

2 TRUE

2½ TRUE

1½ TRUE

LOCATE FROM 28P5003

(J) 28D1049-15 HINGE PIN

-15 HINGE (LOWER HALF) MAKE FROM Y56A10T

-19 UPPER HALF OF -15 HINGE MAKE FROM Y56A10T

(B) Q4305-D4 RIVETS PRESS C'SK SKIN

*FA-56 DZUS FASTENER
*502 GROMMET
3M113-3 HOLE
LOCATE FROM 28P5041

-12 ALCLAD SHT.

-17 1½ x 5/8 x 1/16 TEE SPOTWELD TO -12

-14 ALCLAD SHT.

LOCATE DZUS TO SUIT 28D3000 ON INSTALL. (E)

(B) Q4305-D5 RIVETS AT END OF -17 TO BE FLUSH ON INSIDE

FWD.

C'SK RIVET HEAD ON INSIDE. BOTH SIDES

1¼ TRUE

2 TRUE

¼ R APPROX. (C)

16½

(B) Q4305-D4 RIVETS AT END OF -19 TO BE FLUSH ON INSIDE.

-19 1½ x 5/8 x 1/8 TEE SPOTWELD TO -12

(C) TRIM AS SHOWN & REMOVE ALL BURRS & SHARP EDGES

KEEP THIS AREA CLEAR OF RIVETS BOTH SIDES

-7 (REF)

-11 (REF)

-20

(H)

SECTION H-H
12"=1'-0"

25½ R. INSIDE SKIN FWD. UPPER HALF

24½ R. INSIDE SKIN LOWER HALF & REAR UPPER HALF

105°

56½°

45°

CUT -7 & -16 TO CLEAR SPRING & FASTENER

BREAK CORNERS

2⅜ APPROX.

(E) 2¼

1¼

45°

45°

45°

2¼

¾

⌀ DRG.

(B) Q4308-D5 RIVET AT END OF -7

(B) Q4305-D3 RIVET AT EACH END OF -6

-6 SPOTWELD TO -10

SECTION A-A
12" = 1'-0"

NAC.

(B) Q4308-D5 RIVET AT END OF -16

PRESS C'SK. SKIN

(L)

SECTION B-B
12" = 1'-0"

-9

-8

-7

-11

SECTION C-C
12" = 1'-0"

(D)

28D3008 TOOLS MAY BE USED ON LOWER HALF

SECTION D-D
12" = 1'-0"

(E)

*502	DZUS GROMMET		5
*FA-56	DZUS FASTENER		5
Q4305-D4			
Q4305-D3			12

28D5016-20	13 1/16 x 5/16 x .064	AL ALLOY 24ST	4A&B CONDT.	2
28D1049-15				2
28D5016-19	Y56A10T x 15			1
	IIRD32-2 2½ x 3/16	ALC 24 ST	47AB CONDT	
-18	Y56A10T x 15			
-17	K1422 x 22	AL ALLOY 53ST	46A10 CONDT	
-16	K1422 x 22	AL ALLOY 53ST	46A10 CONDT	
-15	Y56A10T x 15			
-14	043 x 2 7/8 x 10 1/2	ALCL. 24 ST	47AB COND. T	
-13	K103 x 1K 20	AL ALLOY 53ST	46A10 COND. T	
-12	.032 x (6 1/4 x 2 1/16	ALCL. 24 ST	47AB COND. T	
-11	D32 x 2 7/8 x 3/16	ALCL. 24 ST	47AB CONDT	
-10	032 x 2 5/8 x 18	ALCL. 24 S0	47AB COND. A	
-9	.032 x 6 1/8 K12	ALCL. 24 ST	47AB CONDT	
-8	K9376 x 22	AL ALLOY 53ST	46A10 COND. T	
-7	K1422 x 22	AL ALLOY 53ST	46A10 CONDT	
28D5016*	.032 x 17 x 22	ALCL. 24 ST	47AB CONDT	

PART No	STOCK	MATERIAL	SPEC.	LH RH	LH RH	LH RH	LH RH	LH RH
				REQ	REQ	REQ	REQ	REQ
PARTS LIST PER ASSY.				-0	-2	-3	-4	-5

ASSY SHOWN ON	MODEL	NEXT ASSY	NOS
REQUIREMENTS PER AIRPLANE			
REPLACED		CALC WT	
REPLACED BY		ACT WT	
LAST ON DRAWING NUMBER	SCALE 6" = 1'-0"		
STAMP PART NUMBER WHERE SHOWN	NOTED		

GREEN PRIME

FINISH CODE	
Z	ANODIC TREATMENT
P	P-27 PRIMER
AB	ALUMINIZED PRIMER
C	CADMIUM PLATE

NOTE -
1) SPACE RIVETS & SPOTWELDS APPROX. AS SHOWN MIN. EDGE DIST ⅜
(B) 2) ALL RIVETS TO BE Q4305-D4 UNLESS OTHERWISE SPECIFIED.
3) H.T. ALL 50 AL. ALLOY TO "ST" (SPEC. SR55)
4 SEE 28D3008 FOR TOOLS

A C		12-20-39	DONALD
NAVY NOTED	(A) P-AP INSIDE (A) P-AP OUTSIDE	PW CHECK	22339
HEAT TREAT	(G) FINISH	DRAFT	CHECK

STRUCT	MAT	APPROV	PROD	

NAME PANEL ASSEM. NACELLE COWL LEFT

OPP. HAND

CONSOLIDATED AIRCRAFT CORP. SAN DIEGO, CALIF.

DWG. G SIZE 28D5016

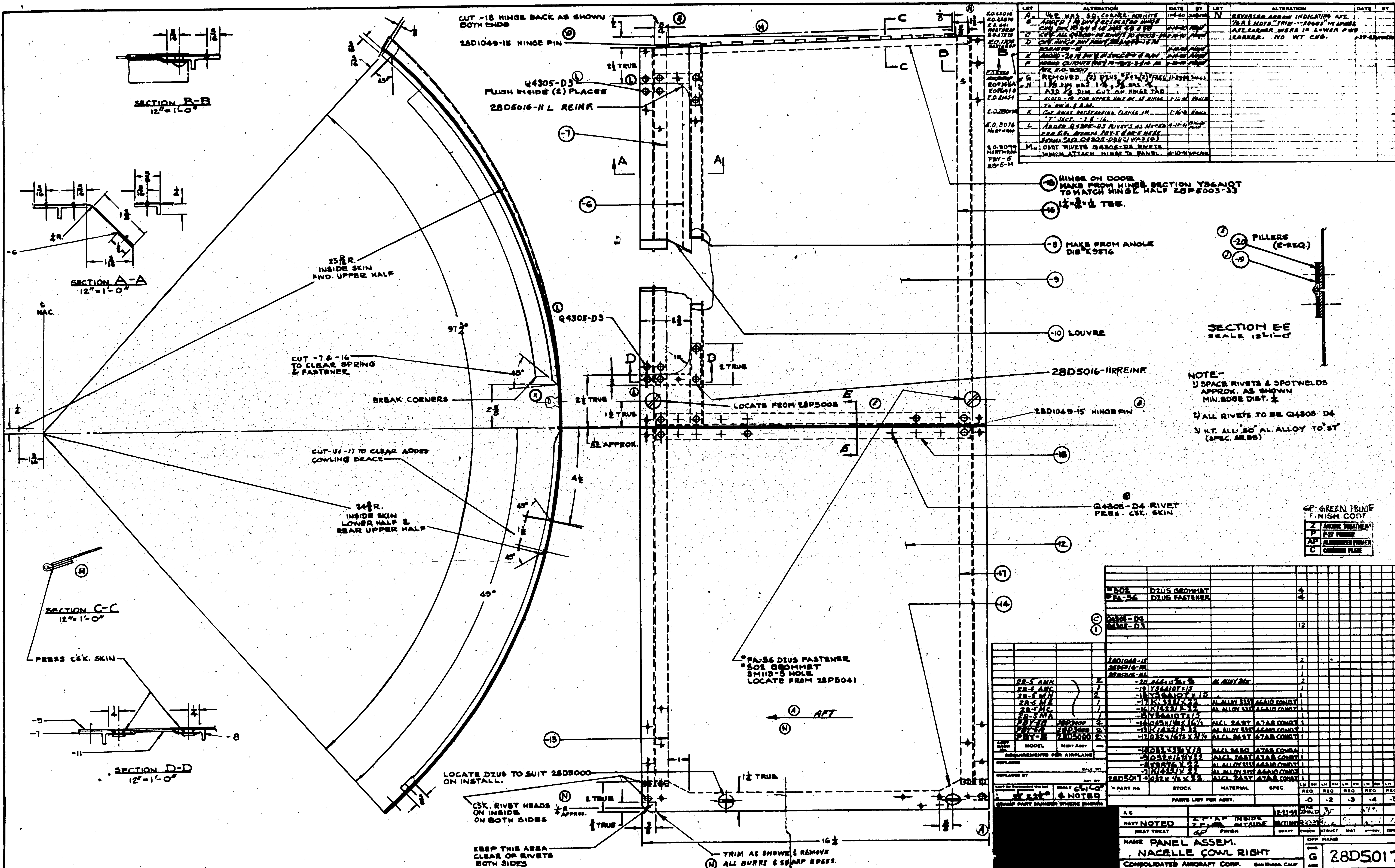

E.O.	LET	ALTERATION	DATE	BY
E.O.22016	A	¼R WAS SQ. CORNER. ADD NITE	11-4-40	[illegible]
E.O.22070 / E.O.641 NORTHROP	B	ADDED 1 ⅜ DIM & RELOCATED HINGE CUT DIM. TO 3/4 & 1.12 WAS 5/8 & ⅞	11-14-40	[illegible]
E.O.27373	C	CHG. ALL Q4305-D6 RIVETS TO Q4305-D4	11-19-40	[illegible]
E.O.1708 NORTHROP	D	CHG. HINGE PIN FROM 28D1049-14 TO 28D1049-15	11-19-40	[illegible]
	E	ADDED -20 PILLERS & SECT. E-E & DIM.	11-19-40	[illegible]
	F	ADDED CUTOUTS (REF) IN -7, -15, -17 & -16 AS PER E.O. 28017	11-22-40	[illegible]
E.O.23586 NORTHROP	G	REMOVED (2) DZUS #502 (2) #FA56	11-29-40	[illegible]
EO#1464A / EO#2410	H	1⅜ DIM WAS 1¼, ⅜ WAS ¼. ADD ⅛ DIM. CUT ON HINGE TAB	"	"
E.O.21454	J	ADDED -19 FOR UPPER HALF OF -15 HINGE TO DWG. & B.M.	1-16-41	[illegible]
E.O.28017A	K	CUT AWAY OUTSTANDING FLANGE IN "T" SECT. -7 & -16.	1-16-41	[illegible]
E.O.3076 NORTHROP	L	ADDED Q4305-D3 RIVETS AS NOTED PER E.O. ADDED PBY-5 DATE HERE SPEC. ADD Q4305-D3 (12) WAS (6)	4-11-41	[illegible]
E.O.3099 NORTHROP PBY-5 28-5-M	M	OMIT RIVETS Q4305-D3 RIVETS WHICH ATTACH HINGE TO PANEL.	4-10-41	[illegible]

LET	ALTERATION	DATE	BY
N	REVERSED ARROW INDICATING AFT. ⓐ & ⓝ NOTE "TRIM---EDGES" IN LOWER AFT CORNER WERE IN LOWER FWD CORNER. NO WT CHG.	1-29-43	[illegible]

NOTE-
1) SPACE RIVETS & SPOTWELDS APPROX. AS SHOWN MIN. EDGE DIST. ⅜
2) ALL RIVETS TO BE Q4305 D4
3) H.T. ALL "SO" AL. ALLOY TO "ST" (SPEC. SR 56)

GP: GREEN PRIME

FINISH CODE	
Z	ANODIC TREATMENT
P	P-27 PRIMER
AP	ALUMINIZED PRIMER
C	CADMIUM PLATE

MODEL	NEXT ASSY	REQ
28-5 AMN		2
28-5 AMC		1
28-5 MN		2
28-5 ME		1
28-5 MC		1
28-5 MA		1
PBY-5B	28D3000	2
PBY-5A	28D3000	2
PBY-5	28D5000	2

REQUIREMENTS FOR AIRPLANE

REPLACES — CALC WT

REPLACED BY — ACT WT

SCALE 6-1-40 ¼ NOTED

STAMP PART NUMBER WHERE SHOWN

PART No	STOCK	MATERIAL	SPEC.	REQ -0
#502	DZUS GROMMET			4
#FA-56	DZUS FASTENER			4
Ⓒ Q4305-D4				
Ⓛ Q4305-D3				12
28D1049-15				2
28D5016-11R				1
28D5016-11L				1
-20	.064 × 1⅛ × ⅝	AL ALLOY 24ST		2
-19	Y56A10T × 15			1
-18	Y56A10T × 15			1
-17	K1322 / × 22	AL ALLOY 53ST	AGA10 CONDT	1
-16	K1422 / × 22	AL ALLOY 53ST	AGA10 CONDT	1
-15	Y56A10T × 15			1
-14	.049 × 1½ × 16½	ALCL 24ST	47A8 CONDT	1
-13	K1422 / × 22	AL ALLOY 53ST	AGA10 CONDT	1
-12	.032 × 1⅝ × 2¼	ALCL 24ST	47A8 CONDT	1
-10	.032 × 3⅜ × 18	ALCL 24SO	47A8 CONDA	1
-9	.032 × 1⅝ × 22	ALCL 24ST	47A8 CONDT	1
-8	K9876 × 22	AL ALLOY 53ST	AGA10 CONDT	1
-7	K1422 / × 22	AL ALLOY 53ST	AGA10 CONDT	1
28D5017-6	.032 × ⅞ × 22	ALCL 24ST	47A8 CONDT	1

PARTS LIST FOR ASSY.

LH RH REQ	LH RH REQ	LH RH REQ	LH RH REQ	LH RH REQ
-0	-2	-3	-4	-5

[redacted]

AC		12-21-39	DONALD
NAVY NOTED	Z-P-AP INSIDE / Z-P- OUTSIDE		
HEAT TREAT	GP FINISH	DRAFT	CHECK / STRUCT / MAT / APPROV / ENG

OPP HAND

NAME PANEL ASSEM. NACELLE COWL RIGHT

CONSOLIDATED AIRCRAFT CORP. SAN DIEGO, CALIF.

DWG. SIZE G 28D5017

LET	ALTERATION	DATE	BY
A	1⅛ WAS ½ — 28D5054-9½ .064 x 8⅝ x 18½ WAS .064 x 8⅝ x 18 (REQ. WT. CHG.)	9-29-42	
B	1 IN & IN 28D5003-8L-LH | 28D 5003-8R R.H. WAS 28D5003-9 LH | RH. NO WT. CHG.	9-24-43	

-7 (REF)

(REF) SUB ASSEMBLY - 6L

$8\frac{5}{16}$

SECTION A-A

CUT -9 TO FIT AS SHOWN

℄ HINGE

DRILL #10 (.193) 2 HOLES

$2\frac{1}{8}$ (REF)

28D5003-7L

$7\frac{27}{64}$

$23\frac{31}{32}$ R AT L.E.

$24\frac{1}{8}$ R AT T.E.

-9 MAY BE MADE FROM 28D5003-9 (REF)

℄ HINGE

28D5003-8R ℄ -8L

28D5003-7R

$\frac{1}{2}$

$14\frac{27}{32}$

$\frac{3}{32}$

94305-AD4

SUB-ASSBLY -6℄

SPOTWELD

(8) AN425-3 LOCATE APPROX AS SHOWN FLUSH BOTH SIDES

$\frac{1}{2}$

$\frac{1}{16}$

$\frac{11}{16}$

DRILL & REAM .250 / .253 THRU -10℄ -7L

B

$\frac{1}{4}$

B

$4\frac{2}{32}$

MCR1703-C.13595

MCR23-7 C.91676 -90 (344-A)

$\frac{5}{16}$

FAIR LINE THRU FIVE POINTS

$\frac{5}{8}$

$\frac{9}{16}$

$\frac{3}{8}$

$\frac{1}{2}$

$2\frac{3}{4}$

2

℄ HINGE

A

NOTE:
1. ALL SPANWISE DIMS. ARE ALONG CONTOUR.
2. ALL BEND RADII ⅛

28D5054-8 .125 X 1⅞ X 11½ ALC 24ST 4TA8-T / 28D5003-7R PARTS ON -6R SUB-ASSEM			
28D5054-8 .125 X 1⅞ X 11½ ALC 24ST 4TA8-T / 28D5003-7L PARTS ON -6L SUB-ASSEM			
-L	PBY-5A	28D5051	
-R	PBY-5A	28D5051	
-L	PBY-5	28D5051	
-R	PBY-5	28D5051	
28D5003-8R			
28D5003-8L			
28D5054-9 .091 X 3½ X 11 ALC 24ST 4TA8-T			
28D5054-10 .064 X 8⅝ X 18½ ALC 24ST 4TA8-T			
28D5054-6R SUB ASSEM			
28D5054-6L SUB ASSEM			

ABBY SYMBOL NO.	MODEL	NEXT ASSY	NO.

REQUIREMENTS PER AIRPLANE

DISPLACES 28D5003 CHG. NO.

DISPLACED BY ACT. NO.

Lines on Engineering Drawings Represent Centers of Surfaces. SCALE 1" = 1'0"

STAMP PART NUMBER WHERE SHOWN

PART No	STOCK	MATERIAL	SPEC.	LH RH REQ. -0	LH RH REQ. -2	LH RH REQ. -3	LH RH REQ. -4	LH RH REQ. -5

PARTS LIST PER ASSY.

A.C. NAV. NONE HEAT TREAT

Z-P-GP PINION

DRAFT 10-1 CHECK 4/6/43 STRESS MAT APPROV TYPE

NAME COWL FLAP - TOP EXHAUST ANTI-ICING

CONSOLIDATED AIRCRAFT CORP. SAN DIEGO, CALIF.

OPP. HAND 28D5054-8

SPEC G DWG 28D5054

R 2

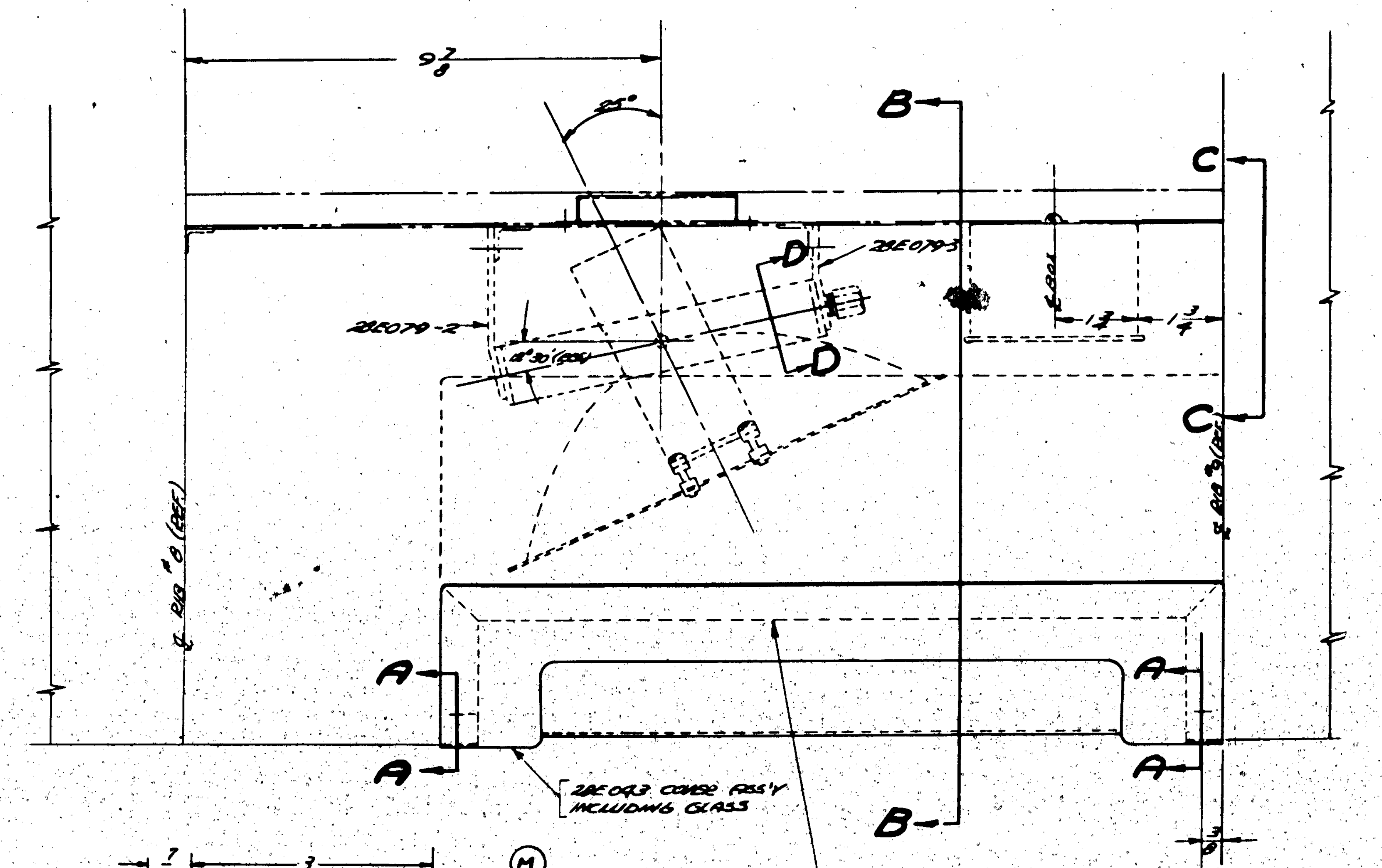

GASKET 1/8 THICK X 1 WIDE DURABSNE CEMENT TO L.E. SKIN WITH VULCALOCK CEMENT APPROX TOTAL L'G'TH 68". (R)

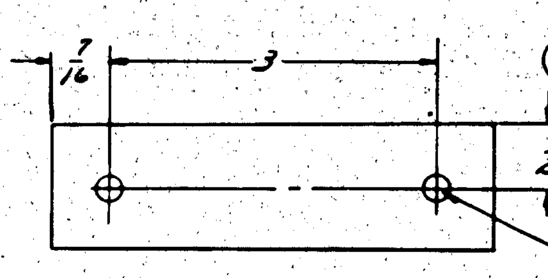

(M)

DETAIL -14 (T)
1/4 X 1 X 3 7/8
MICARTA BLOCK
SPEC 1785 TYPE PBG

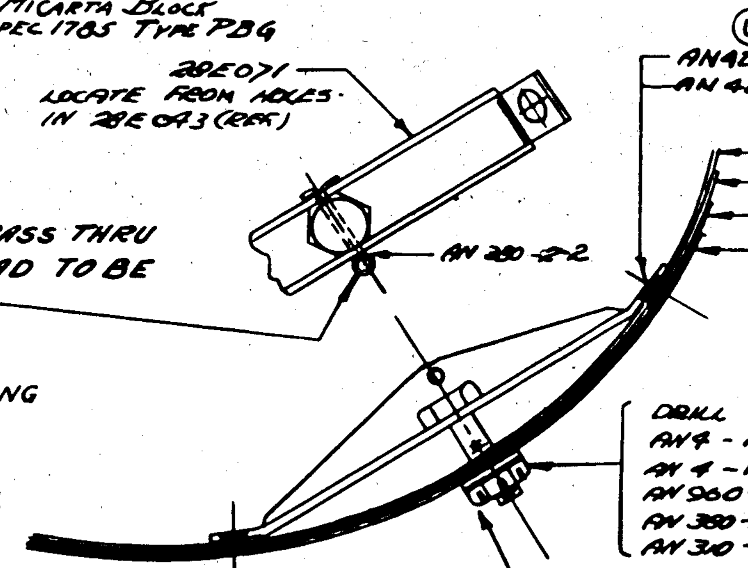

(S) COTTER PIN TO PASS THRU RIB #9, PIN HEAD TO BE INSIDE WING

USE CAUTION - EXCESSIVE TIGHTENING OF THIS NUT MAY DEFORM CONTOUR.

SECTION AA
SCALE 12" = 1'0"

NOTE:-
-12 LAMP SUB ASS'Y. (GENERAL ELECTRIC CO. TYPE G-3, DRAWING No T-4342895.
(W) MIRROR (REFLECTOR)
FRAME (MOUNTING BRACKET)
RECEPTACLE (SOCKET) MOGUL PRE-FOCUSES.
RING (GIMBAL RING)
NECESSARY MOUNTING SCREWS, ADJUSTING SCREWS, NUTS, & WASHERS.

-12 REPLACES -2,-3,-4,-7 FOR -55 & -56 ASS'Y.
-13 LAMP IS USED WITH -55 & -56 ASSY. (TYPE G-25 - 420 WATT - 24 VOLT MOGUL PRE-FOCUSED BASE).

NOTE:-
IN PLAN VIEW REFLECTOR IS SHOWN TURNED 25° OUTBOARD, 0° DOWN; IN SECTION B-B, -0° OUTBOARD & 29° DOWN

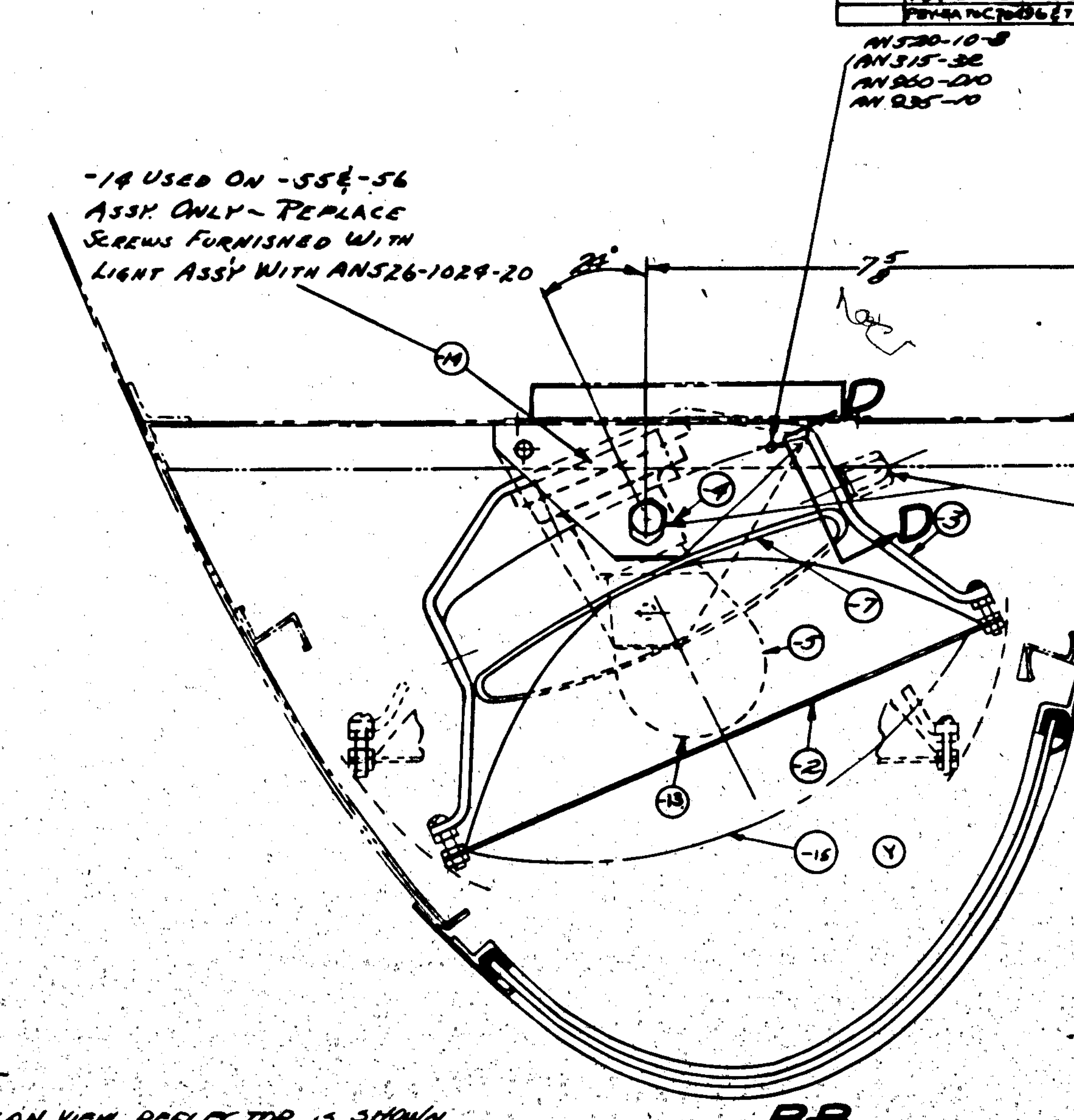

SECTION BB

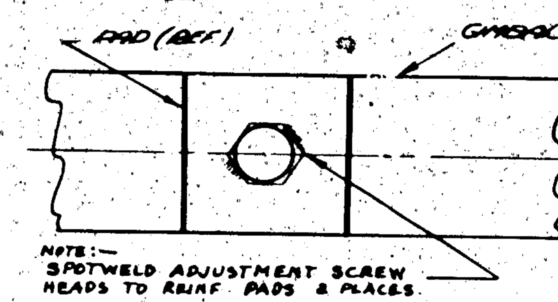

NOTE:— SPOTWELD ADJUSTMENT SCREW HEADS TO REINF. PADS 2 PLACES.

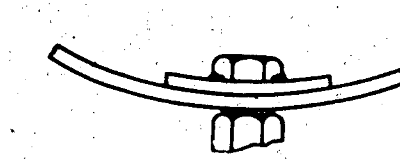

VIEW D-D
SCALE 12" = 1'0"

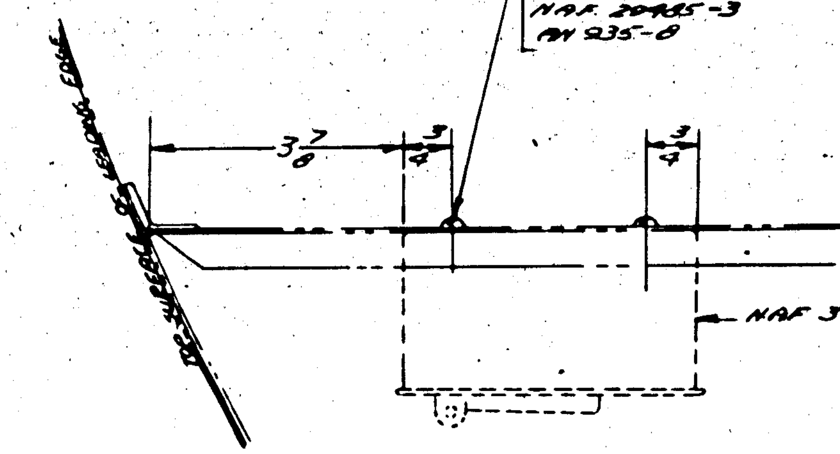

NOTE:- BOX NO NAF 39964 IS USED ON XP3Y-1 ONLY.

SECTION C-C

(N) NOTE:—
FINISH ALL INTERIOR PARTS EXCEPT INSIDE OF -2, -4 & -5
P-2DBE = ANODIZE, 2 DULL BLACK ENAMEL

(P) (N) (O)

LET.	ALTERATION	DATE	BY
X	E.O. A62195 ADDED REQ'S -55 & -56 (1 EA) FOR PBY-5 #91 ON N/A 28E5265 NO WT. CHG.		
Y	E.O. 64168 - MCR #121 CREATED -57 & -58 ASSYS. — IN PBD/AIRPLANE CANCELLED -55 & -56 FOR C: 91876, 88476, & 88477 — LIMITED -55 & -56 FOR PBY-5 TO C: 70496 N.A. 28E4014 FOR PBY-5A TO C: 70496 & 77713 N.A. 28E4014 (NEG. WT. CHG)		

SUPPLIES & EQUIPMENT CLASSIFICATION

LET.	ALTERATION	DATE	BY
K	TRACED	4-5-37	
L	MEDIUM WAS MOGUL	6-23-37	
M	ADDED -8 & -9 ASSY. SAME AS -0 & -1 ASSY EXCEPT 28E043-12 & -13 (F & REQ) REPLACES 28E043-0 & -1	12-20-37	
N	ADDED NOTE: FINISH ALL INTERIOR PARTS EXCEPT INSIDE OF -2, -4 & -5 2DLE	7-7-38	
O	CHANGED NOTE TO "SPOT WELD" WAS TACK WELD. ADDED PBY-4 REQ'S.	3-7-39	
P	NEXT ASSY 28E4014 WAS 28E2014 FOR PBY-4 & PBY-3	1-19-39	
Q	REMOVED FROM B/M -8 & -9 ASSY'S (SAME AS -0 & -1 ASSYS. ALSO REMOVED FROM DWG & B/M 28E043-1 & 28E043-12 & -13. ADDED CHART ON STATUS OF SHIPS DELIVERED.	9-21-39	
R	ADD -8, -55, -56 ASSEM. FOR PBY-5 WIDTH OF -6 FROM 3/4 TO 1	11-25-39	
S	E.O. 30007 NOTE ADDED TO SECTION A-A	12-29-40	
T	E.O. 26843 DETAIL -14 ADDED & WEIGHT CHANGED	2-12-41	
U	PBY-E.O. 31751 AN425 D3 REPLACES AN430-D3-3 RIVET	6-7-41	
V	EA 15870 PBY-5 28-5MP ON FACE OF DWG. & BM -12 & -13 WERE -8 & -9 RESP.	8/12/41	
W	PBY-5 E.O. A9012A ADDED NOTE SPECIFYING ADDITIONAL INFORM. ON -12 & -13	6-24-42	

(*) NOTE:- FOLLOW. ITEMS PURCHASED FROM GEN. ELECT. CO SCHENECTADY, NEW YORK.

(-2) REFLECTOR - 9" DIA. FOCAL LENGTH 1 5/8" INSIDE TO BE CHROM. PLATED & TO HAVE NOT LESS THAN 75% REFLECTIVITY FOR -0, -1, -10 & -11 ASSY. ONLY (GE DWG MM91590 REF.)

(-3) MOUNTING BRACKET TO BE MADE OF HALF HARD ALLUMINUM. FOR -0, -1, -10 & -11 ASSY. ONLY

(L)

(-4) SOCKET MEDIUM PREFOCUS FOR -0, -1, -10 & -11 ASSY. ONLY

(Y) (-15) -15 LAMP ASSY. FOR -57 & -58 ASSY. CONSISTS OF SEALED BEAM LANDING LIGHT ASSY PER G.E. C.O. DWG. P-82422 FOR -57 & -58 ASSY ONLY

(-5) LAMP - TYPE A19 BULB 240 WATT 12 VOLT FURNISHED WITH -2 FOR -0, -1, -10 & -11 ASSY. ONLY

(-7) GIMBAL RING TO BE MADE OF HALF HARD ALUM.

(-13) LAMP - TYPE G25 BULB 420 WATT 24 VOLT FOR -55 & -56 ASSY. ONLY
NECESSARY MOUNTING SCREWS, ADJUSTING SCREWS, NUTS, & WASHERS. (R)

(-12) LAMP ASSEMBLY, GENERAL ELECTRIC CO. DRAWING NO. T-4342895-G-3. (SEE NOTE IN LOWER LEFT CORNER OF DRAWING). (W)

NOTE:- SEE 28W016 FOR FINISH SPEC.

-56	28-5AMN	28E4014	1
-55	28-5AMN	28E4014	1
-56	PBY-5	28E5265	1
-55	PBY-5	28E5265	1

#91-345 (C91876) applies to -56 and -55 PBY-5 28E5265 rows.

Note	Dash	Model	Next Assy	Req	Part No.									
					AN425 D3							4	4	4
					28E005-14									1
					AN526-1024-20									2
SPARES-C.88477	-58	PBY-5B	28E6049	1	AN960-D416	2	2			2	2	2	2	2
SPARES-C.88476	-58	PBY-5A	28E4014	1	AN960-D10	4	4			4	4	4	4	4
#346 & ON C.91876	-58	PBY-5	28E5265	1	AN935-10	4	4			4	4	4	4	4
(MCR #121) SPARES-C.88477	-57	PBY-5B	28E6049	1	AN935-8	2	2							
SPARES-C.88476	-57	PBY-5A	28E4014	1	AN520-10-8	4	4			4	4	4	4	4
#346 & ON C.91876	-57	PBY-5	28E5215	1	AN430-D3-3	4	4			4	4			
	-56	28-5MC, AMC	28E4014	1 EA	AN380-2-2	2	2			2	2	2	2	2
	-56	28-5MA, ME	28E5547	1 EA	AN315-3R	4	4			4	4	4	4	4
	-56	28-5MN	28E4014	1	AN310-4	2	2			2	2	2	2	2
	-56	PBY-5B	28E6049	1	AN4-11	1	1			1	1	1	1	1
	-56	PBY-5A	28E4014	1	AN4-10	1	1			1	1	1	1	1
	-55	28-5MC, AMC	28E4014	1 EA	28E005-12									1
C.70496	-56	PBY-5	28E4014	1	NAF39964	1	1							
C.70496 & 77713	-55	PBY-5	28E4014	1	NAF294863	2	2							
	-1	PBY-4	28E4014-7R	1	NAF29485-3	2	2							
	-0	PBY-4	28E4014-7R	1	NAF29362-4	2	2							
	-1	PBY-3	28E4014R	1	28E005-13									1
	-0	PBY-3	28E4014R	1	28E079-3	1	1			1	1	1	1	1
	-55	28-5MA, ME	28E5547	1 EA	28E079-2	1	1			1	1	1	1	1
	-55	28-5MN	28E4014	1	28E071-	2	2			2	2	2	2	2
C.70496 & 77713	-55	PBY-5B	28E6049	1	28E005-18							1	1	
	-55	PBY-5A	28E4014	1	28E043	1	1			1	1	1	1	1
	-1	PBY-2	28E2014	1	28E005-7	1	1			1	1			
	-0	PBY-2	28E2014	1	-6	1	1			1	1	1	1	1
	-1	PBY-1	28E1014	1	-5	1	1			1	1			
	-0	PBY-1	28E1014	1	-4	1	1			1	1			
	-11	XP3Y-1	28E015	1	-3	1	1			1	1			
	-10	XP3Y-1	28E015	1	-2	1	1			1	1			
		MODEL	NEXT ASSY	REQ	PART	LH -10	RH -11			LH -0	RH -1	-57	-58	LH RH -55 -56

STATUS OF SHIPS AS DELIVERED

	SHIPS EFFECTED	28E043 ASSY'S.	GLASS	28E005 DASH NO.
PBY-1	ALL	L. & R.	PYREX	-0, -1
PBY-2	1 TO #16 INCL. (0364 TO 0379 INCL.)	L. & R.	PYREX	-0, -1
PBY-2	#17 (0470) & ON.	L. & R.	PLEXIGLASS	-8, -9
PBY-3	ALL	L. & R.	PLEXIGLASS	-8, -9
PBY-4 •	ALL	NO L. & R. ASSEMBS. BUT INTERCHANGEABLE	PLEXIGLASS	-8, -9

• NOTE:- ALL FUTURE PBY-1, -2, 4-3 SPARES TO BE THE SAME AS PBY-4.

REPLACES 28E005		L.C.W. 4-5-37
REPLACED BY		464
LIMITS ON DIMENSIONS UNLESS OTHERWISE SPECIFIED ± 1/32		SCALE 6" = 1'0" EXCEPT AS NOTED
[redacted]		NAVY NOTED
		MATERIAL: NOTED — HEAT TREAT: NONE — FINISH: NOTED
CONSOLIDATED AIRCRAFT CORP. BUFFALO N.Y.	NAME: LANDING L'GHT ASSY INST.- ELEC. SYS.	G 28E005

REQUIREMENTS PER AIRPLANE — MAT. — PARTS LIST PER ASS'Y 28E005-1

R

LET	ALTERATION	DATE	BY
T	ON FACE OF DWG. REMOVED NOTE "ALA 24A"		
	½ AL ALLOY ANGLE ALCOA DIE 2" TAP		
	½ ELEC" RIPRAID WITH MFR'S MAT'L		
	ELEC-11 ... ANGLE (R. REVD.)	2-8-38	[illegible]

LET	ALTERATION	DATE	BY
√	TRACED	5-7-37	REED
K	ADDED -12 & -13 ASSYS FOR 28E005-8 & -9 REMOVED -08-1 ASSYS FOR [illegible] DWG.		
	ADDED 28E1042-2 FOR -12 & -13 ASSYS (6-15-37)		[illegible]
L	CHANGED INTERIOR FINISH		
	NOTE TO EDLE, WAS 24KY.		
	ADDED PBY-4 REQ'S.	1-6-38	[illegible]
M.	REMOVED -8 & NOTES FROM		
	DWG. & B/M. ADDED ADDITIONAL		
	-11 TO DWG. & B/M. REMOVED		
	FROM B/M & DWG. 28E1042-2,		
	-12 & -13 ASSYS, & 28E1042		
	-04 -1 ASSYS. REMOVED		
	28E1042-2, IN SUBSTANCE		
	THIS CHG. MAKES L.H. & R.H.		
	PARTS INTERCHANGEABLE &		
	THE USE OF PLEXI-GLASS ON		
	ALL FUTURE PARTS MADE.	3-14-38	[illegible]
N.	ADDED 2 ¼" DRAIN HOLES IN -5.		
	ADDED MARINE GLUE & TAPE		
	BETWEEN FRAME & -5.	5-6-38	[illegible]
O	ADDED SECT. D-D. INSIDE OF -5 SAME CONTOUR AS WING C.S. I.E. [illegible]	9-23-38	[illegible]
P	ADD. SCREW FOR AN 526-632R6 TO AN 526-632R5 ... SCREW FOR AN 526-632R5 TO AN 526-632R4		
Q	ADD AN 960-6 & AN 935-6 WASHERS	11-18-38	[illegible]
R	CHG. [illegible]	11-19-38	[illegible]
S	ADDED 1/8 DIM. ON VIEW C. [illegible]	11-17-42	[illegible]
	IN WARNING NOTE "SINK ..." WAS VULCATE [illegible]		

C.O. 6733

C.O. 7044

C.O. 7742

E.O. 10995

PBY-5, 5A-3

(T) (11) MAT'L. FOR -11 MAY BE:-
A. Y2-A19T X 9 ½, OR
B. K78P X 9 ½, 24ST AL. ALLOY EXTR., SPEC. 46A9 COND. T. (2 REQ'D)

VIEW C

CHORD LINE

SECTION A-A

NOTE: FORM COLLAR (5) TO THIS DIMENSION

VIEW C
FULL SIZE

16 ⅛ APPROX (REF.)

EXTR. ALUM. ALLOY ALCOA DIE # K 5090 APPROX. LGTH 14 ½

EXTR. ALUM. ALLOY ALCOA DIE # K 5090 APPROX. LGTH 16

COVER PLATE .051 ALUM. ALLOY SHEET APPROX. FLAT PAT. SIZE 16 ½ X 18 FORM TO AIRFOIL CONTOUR TO SUIT FRAME & GLASS SEE NOTE.

2 ¼ DIA. HOLES, ONE IN EACH LOWER CORNER. EDGE OF HOLE APPROX. 1/16 FROM GLASS FRAME.

12 ⅜ APPROX

28E1042 GLASS

(9) L.H.
(10) R.H.

VIEW B

82° ± ½°

(7) L.H.
(8) R.H.

DRILL "F" (257) 2 HOLES

NOTE:- DETERMINE LOCATION OF COVER ASSY FROM 28E005 LANDING LIGHT INST.

SECTION A-A

NOTE: BREAK EDGE OF -5 COVER PLATE ALL AROUND

ADD ¾" MARINE GLUE & FABRIC TAPE BETWEEN GLASS FRAME AND -5 COVER PLATE. (N)

MITER CUT ENDS OF -2, -3, -4 & 178338

(2) REF.
(3) REF.

GLASS

178338 RUBBER APPROX. TOTAL LENGTH 62

CORNER FILLET MAY BE BUILT UP WITH WELD.

AN 526-632-6
AN 526-632-5 (P)
MAT 2 9486-A, AN 933-6, AN 340-6

THIS DIMENSION SAME ON ALL EDGES

VIEW B
TYPICAL CONSTRUCTION
SCALE 12" = 1'-0"

THESE 2 HOLES DRILLED AT ASSY.

#28 (.140) DIA. 4 HOLES

(7) L.H. DETAIL
(8) R.H. SCALE 12" = 1'

MAT'L .040 AL. AL. SHEET

THESE 2 HOLES DRILLED AT ASSY.

#28 (.140) DIA. 4 HOLES

(9) L.H. DETAIL
(10) R.H. SCALE 12" = 1'-0"

MAT'L .040 AL. AL. SHEET

SECTION D-D

DIMS ARE TO INSIDE OF -5 COVER PLATE

TANGENT POINTS OF NOSE RADIUS & ORDINATE LINES

CHORD LINE

CONTOUR OF WING CENTER SECTION L.E. TEMPLATE

FINISH: 2-P EXTERIOR
EXTERIOR TO MATCH ADJACENT WING
INTERIOR 2 DBE
1- ANODIZE
2- PRIMER.
DBE: DULL BLACK ENAM.

WARNING:
CURVATURE OF GLASS USED IN THESE COVERS CANNOT BE CONTROLLED WITHIN CLOSE TOLERANCE DUE TO NECESSARY ANNEALING OPERATIONS
CARE MUST BE EXERCISED TO AVOID STRAIN ON GLASS AFTER MOUNTING. THEREFORE, WHERE THE GLASS DOES NOT PERMIT THE RUBBER CHANNEL TO BE MOUNTED, CUT OUT LENGTH OF RUBBER CHANNEL NECESSARY AND FILL WITH ZINC CHROMATE COMPOUND TYPE #1. LENGTH OF ANY PIECE OF RUBBER CHANNEL NOT TO BE LESS THAN 1 INCH. (S)

STATUS OF SHIPS AS DELIVERED

MODEL	SHIPS	PREVIOUS DASH NO.
PBY-1	ALL SHIPS	-04 -1 ASSEMS. - PYREX
PBY-2	1-16 (0454 TO 0469)	-04 -1 ASSEMS. - PYREX
PBY-2	17 ON (0470 ON)	-12 & -13 ASSEMS: PLEXIGLASS
PBY-3	ALL	-12 & -13 ASSEMS: PLEXIGLASS
PBY-4	ALL	INTERCHANGEABLE

NOTE 1- THE INTERCHANGEABLE PLEXIGLASS TYPE AS USED ON PBY-4 SHOULD BE MADE FOR ALL FUTURE SHIPS & SPARES.

ALL AL. ALLOY SHEET: SPEC 47A1-6 CONDITION A) ALLOY 24 AS EXCEPT AS NOTED
ALL AL. ALLOY EXTRUSIONS SPEC 46A9 (CONDITION A) ALLOY 24 AS EXCEPT AS NOTED
HEAT TREATMENT CONDITION MATERIAL PER SPEC 3A53
BOLTS AL. ALLOY EXCEPT AS NOTED

NO.	PART NAME	PART NO.	REQ.	MATERIAL
	[illegible]	28E008	2 EA	
	[illegible]	28E009	2 EA	AN 340-6
	[illegible]	28E005	2 EA	AN 933-6
	PBY-5A	28E008	2	[illegible]
	PBY-5A	28E005	2	AN 526-632-5
	PBY-5	28E005	2	AN 526-632-6
	PBY-4	28E005	1	28E1042
	PBY-4	28E005	1	178338
	PBY-2	28E005-	1	28E045-11
	PBY-2	28E008	1	-10
	PBY-3	28E005	1	9
	PBY-3	28E005	1	8
	PBY-2	28E005	1	7
	PBY-2	28E005	1	6
	PBY-1	28E005	1	5
	PBY-1	28E005	1	4
	PBY-1	28E005-1	1	3
	PBY-1	28E008	1	28E043-2

REPLACES			
REPLACED BY			
LIMIT ON DIMENSIONS UNLESS OTHERWISE SPECIFIED	± 1/32		
SCALE G 5/8 UNLESS NOTED			
AC			
NAVY NOTED	NOTED	NOTED	NOTED
MATERIAL	SPEC	HEAT TREAT	FINISH

APPROVED 5-7-37
CALC WT
O.H. MODEL NEXT ASSY REQ. ST'D PART
REQUIREMENTS PER AIRPLANE
MAT.
PARTS LIST FOR ASSY
6-3-37 [illegible] 6-8-37
[illegible] 8-29-37 [illegible]
DRAFT

CONSOLIDATED AIRCRAFT CORP BUFFALO, N.Y.

NAME COVER ASSY-ELEC. SYS LANDING LIGHT

OFF ANL

SIZE G DWG NO. 28E043

28E043 R

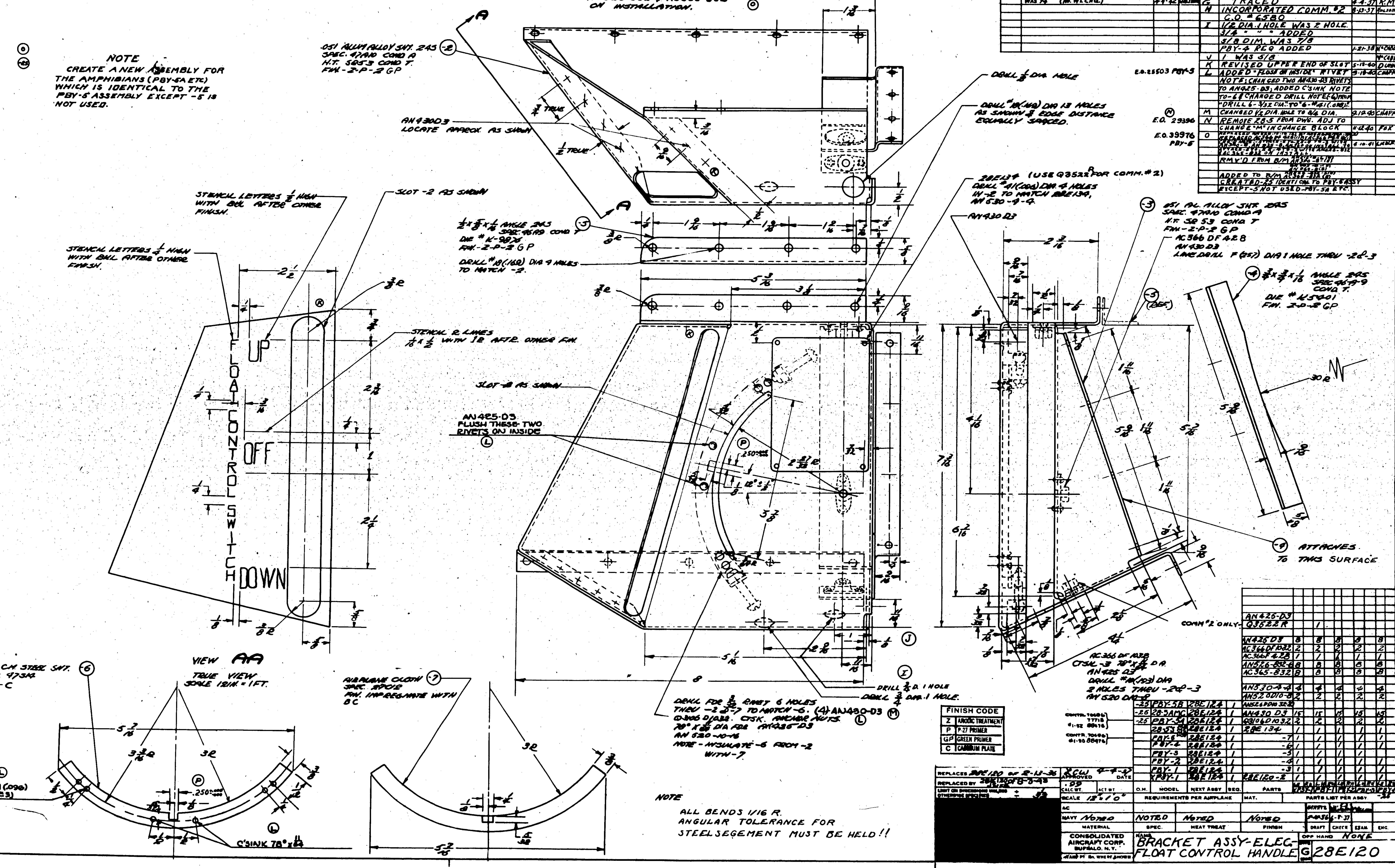

NOTE: - ATTACH -5 TO -2 & -4 TO -3 WITH AN526-832 & AC365-832 ON INSTALLATION.

NOTE

CREATE A NEW ASSEMBLY FOR THE AMPHIBIANS (PBY-5A ETC) WHICH IS IDENTICAL TO THE PBY-5 ASSEMBLY EXCEPT -5 IS NOT USED.

NOTE

ALL BENDS 1/16 R.
ANGULAR TOLERANCE FOR STEELSEGEMENT MUST BE HELD!!

LET	ALTERATION	DATE	BY
P	CHG'D DIM. 2 PLACES (-2&-6) .250 +.002 -.000 WAS 1/4 (NO WT. CHG.)	4-1-42	[illegible]

SUPPLIES & EQUIPMENT CLASSIFICATION

LET	ALTERATION	DATE	BY
G	TRACED	4-4-37	R.M.
H	INCORPORATED COMM. #2 C.O. #6580	8-13-37	[illegible]
I	1/2 DIA. 1 HOLE WAS 2 HOLE. 3/4 " " " ADDED 3/8 DIM. WAS 7/8		
	PBY-4 REQ ADDED	1-21-38	McCABE
J	1 WAS 5/8		McCABE
K	REVISED UPPER END OF SLOT	5-13-40	DUNN
L	ADDED "FLUSH ON INSIDE" RIVET NOTE; CHANGED TWO AN430-D3 RIVETS TO AN425-D3; ADDED C'SINK NOTE TO -6 & CHANGED DRILL NOTE (L) FROM "DRILL 6-3/32 DIA." TO "6-#41 (.096)".	9-19-40	CHAPMAN
M	CHANGED 1/2 DIA. HOLE TO 3/4 DIA.	9-19-40	CHAPMAN
N	REMOVE 28-5 FROM DWG. ADJ TO CHANGE "M" IN CHANGE BLOCK	11-12-40	FOX
O	[illegible] RMV'D FROM B/M [illegible] ADDED TO B/M [illegible] CREATED -25 IDENTICAL TO PBY-5 ASSY EXCEPT -5 NOT USED - PBY-5A ETC.	6-10-41	[illegible]

O.H.	MODEL	NEXT ASSY	REQ.
-25	PBY-5B	28E124	1
-25	28-5AMC	28E124	1
-25	PBY-5A	28E124	1
	28-5 [illegible]	28E124	1
	PBY-5	28E124	1
	PBY-4	28E124	1
	PBY-3	28E124	1
	PBY-2	28E124	1
	PBY-1	28E124	1
	XP3Y-1	28E124	1

CONTR. 70406 / 77713 / 61-52 88476
CONTR. 70496 / 61-90 88476

PARTS	XP3Y-1	PBY-1	PBY-2	PBY-3	PBY-5A -25
AN425-D3					
Q3522R (COMM #2 ONLY)		1			
AN425 D3	8	8	8	8	8
AC366DF1032	2	2	2	2	2
AC366F428	1	1	1	1	1
AN526-832-8	8	8	8	8	8
AC365-832	8	8	8	8	8
AN530-4-4	4	4	4	4	4
AN520D10-8	2	2	2	2	2
AN526DD10-32-20					
AN430 D3	15	15	15	15	15
Q3106D1032	2	2	2	2	2
28E134	1	1	1	1	1
-7	1	1	1	1	1
-6	1	1	1	1	1
-5	1	1	1	1	
-4	1	1	1	1	1
-3	1	1	1	1	1
28E120-2	1	1	1	1	1

PARTS LIST PER ASSY.

FINISH CODE

Z	ANODIC TREATMENT
P	P-27 PRIMER
GP	GREEN PRIMER
C	CADMIUM PLATE

REPLACES 28E120 OF 2-13-36
REPLACED BY 28E120 OF 8-3-43
LIMIT ON DIMENSIONS UNLESS OTHERWISE SPECIFIED ± 1/32
APPROVED XCW DATE 4-4-37
CALC. WT. .99 — ACT. WT.
SCALE 12" = 1'0"
REQUIREMENTS PER AIRPLANE

	MATERIAL	SPEC.	HEAT TREAT	FINISH
NAVY	NOTED	NOTED	NOTED	NOTED

DRAFT / CHECK / EXAM. / ENG.
OPP HAND NONE

CONSOLIDATED AIRCRAFT CORP.
BUFFALO, N.Y.

NAME: BRACKET ASSY-ELEC-FLOAT CONTROL HANDLE

G 28E120

R 021782

E.O A52956 X REMVD -160 -161 -162 & -163 FROM -550 ASSY NEW WT CHG 8-6-42
E.O A53749 Y CREATED -600 ASS'Y. REVISED REQ PER AIRPLANE BLOCK. NO WT. CHG. 1-18-43
L TRACED UP TO DATE 5-4-37
M ADDED SUPPLEMENTARY VIEW FOR PBY-2 & PBY-3 ADDED -146, -144, -143, REMOVED -110, 6, 112
N ADDED SHEET #2 & -500 ASSY FOR XPBY-5A 11-21-39
O ALL Q925 CLIPS WERE 22Q122
P ADDED -550 ASSY FOR PBY-5; -165 WAS -119; -164 WAS -118
Q NOTE ADDED
R NOTE ADDED - DRWG. & B/M CHANGED PER NOTE.
S Q908A6-8 (1), AN526DD832 (4) & AN365D83 WAS Q925 A7
T CANCELED -161 & -165
U ADDED NOTE "ON ALL ---- GEAR)" NEG WT. CHG. 3-17-42 HUNT
V NAF213028-3 WAS NAF213023-3 (6) NO WT. CHG. 3-17-42 HUNT
E.O 24856
E.O 20360
E.O. 22208-A
E.O. A18341
#527 STRINGER
BLK 4.0 BF 425
DRILL #19 (.166) 2 HOLES TO MATCH 28E1113
6 13/32 FOR PBY-1 & 28E1113 & -2
4 1/2 FOR PBY 2 & PBY 3
DETAIL D
MOUNTING HOLE LOCATION FOR 28E1113 & 28E1132 BOXES SCALE 12 IN = 1 FT
TYPICAL METHOD OF BONDING CONDUIT TO STIFFENERS 2" = 1 FT
VIEW F-F SCALE 6" = 1 FT
SECTION A-A SCALE 12" = 1 FT
SECTION C-C SCALE 3" = 1 FT
SUPPLEMENTARY VIEW FOR PBY2 & PBY3
STATION BOX (REF)
APPROX END OF CONDUIT
MECHANICS STA. BOX (REF)
STR #519
-146 APPROX LGTH = 16"
STR #587
28E5226 (-600 ASSY.)
(REF) STATION BOX & CONDUIT FITTGS AT BOXES ARE GOVT. FURNISHED
STRINGER #704 (REF)
CONDUITS #118 & #119 FOLLOW STRINGERS #704 & #804
-164 FOR -550 ASS'Y & -600 ASS'Y
-118 APPROX LENGTH 24"
NAF 213024-3 (1)
NAF 213022-3 (2)
NAF 213017-3 (2)
APPROX LGTH 30"
VIEW B-B SCALE 1 IN = 1 FT.
-165 FOR -550 ASS'Y & -600 ASSY
-119 APPROX L = 138
FOR CONDUIT FWD OF THIS BLKD SEE DWG #28E1012
STATION BOX (REF.)
Q908A6-8 (8)
AN515-6-8 (8)
AN340-6 (8)
AN935-6 (8)
AN960-6 (8)
Q616-DS-2 (5)
STRINGER #11 (722) REF
INSTALLATION OF TUNNEL GUNNERS STATION BOX CONDUIT PBY-2 ONLY
BLKD #60
SEE FULL SIZE DETAIL D FOR MTG HOLE LOCATION
STR #527 (REF)
STR #625 (REF)
THIS VIEW LOOKING TO STBD FROM ℄ SHIP
BLKD 50
BF 45
BF 55
BF 575
BLKD 6.0
28E1113 (PBY-1 ONLY)
APPROX LGTH 50
23/32 DIA. HOLES THRU WEB
SELF TAPPING SCREWS SHALL BE USED TO SECURE BONDING BRAID TO STRUCTURE.
NOTE - ALL CONDUITS ARE 1/2 O.D. X .022 AL TUBE AN SPEC 44T19 FINISH Z-PLATED INSIDE & ANODIZED OUTSIDE NO PAINT ON FITTING THREADS. COAT THREADS WITH A COMPOUND 50% BY WT. EACH ZINC DUST & PETROLATUM JELLY. BOND AT REGULAR 18" MAX INTERVALS. USE SUPPORT CLIPS AS BONDS WHERE POSSIBLE BY REMOVING PAINT & FIN AS PER 28E1010 (REF)
NOTE: IN LIEU OF SELF TAPPING SCREWS, THE FOLLOWING SHALL BE USED FOR SECURING CONDUIT SUPPORTING CLIPS: - AN515 OR AN526 SCREWS OF PROPER SIZE & LENGTH; AN365 FOR INSTALL. NOT SUBJECT TO REMOVAL IN SERVICE; AN340 OR AN345 NUTS & AN935 LOCK WASHERS FOR INSTALL. SUBJECT TO REMOVAL IN SERVICE; AN960A WASHERS SHALL BE USED WHERE NECESSARY TO SEPARATE DISSIM. METALS. IN SIZES OF #6 & SMALLER STEEL SCREWS & NUTS — IN SIZES OF #8 & LARGER, DURAL SCREWS & NUTS.
NOTE - DASH NOS FOR CONDUIT ON THIS DWG CORRESPOND WITH CONDUIT SECTION NOS ON DWG #28E1001 AS FOLLOWS. —
DASH NOS 28E1020 | SECTION NOS 28E1001
2, 4, 6 | 114
3, 5, 7 | 115
112, 113 | 112, 113
116, 117 | 116, 117
110, 111 | 110, 111
118, 119 | 140
NOTE - BLK #7 ON ALL CONDUIT BOXES DRILL A 1/8 DRAINHOLE IN THE LOWEST POINT OF THE BOX (WHEN SHIP IS ON BEACHING GEAR)
SHEET 1 OF 2
-600 PBY-5 28E5050
-550 PBY-5 28E5050
-500 XPBY-5A 28E4010
-121 PBY-4 28E4010
-121 PBY-3 28E4010
-121 PBY-2 28E1001
PBY-1 28E1001
REQUIREMENTS PER AIRPLANE
PARTS LIST PER ASSY
NOTED NOTED NONE NOTED
ENG. FILE
CONSOLIDATED AIRCRAFT CORP BUFFALO N.Y.
CONDUIT INSTAL-ELEC. SYS.-INTERPHONE BLKD #4.0 AFT.
28E1020
SHEET 1 OF 2 SHEETS

LET	ALTERATION	DATE	BY	LET	ALTERATION	DATE	BY

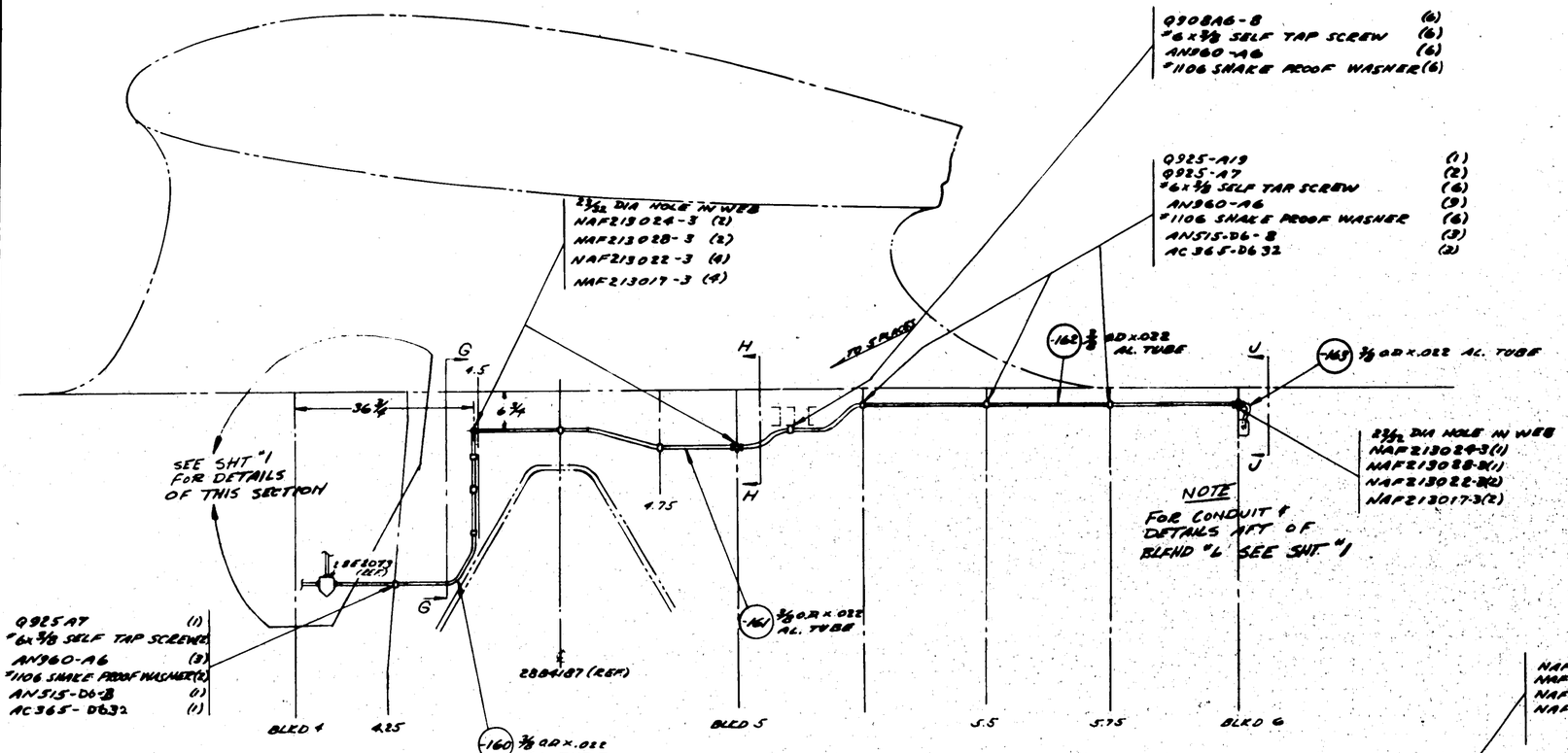

SUPPLEMENTARY VIEW FOR XPBY-5
RH. VIEW LOOKING OUTBD

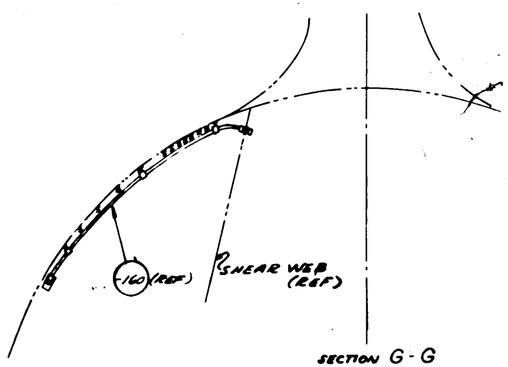

SECTION G-G
BK. 4.5 LOOKING AFT.

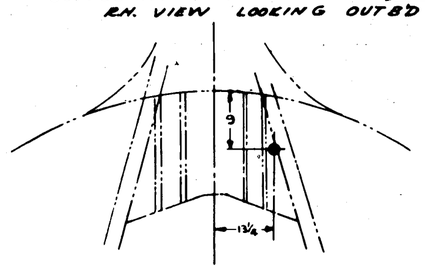

SECTION H-H
BULD 5 LOOKING FWD

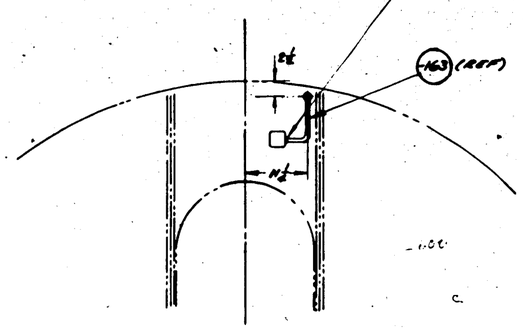

SECTION J-J
BULD 6 LOOKING FWD.

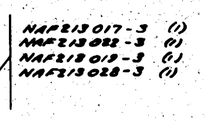

1.) FOR DETAILS NOT SHOWN SEE 28E1020-121 ASSY. (28E1020 SHT #1)

2.) SEE SHEET #1 FOR B.M., HEAT TREAT, & FINISH.

-164	PBY-5A	28E5728	1
-165	PBY-5A	28E5728	1
-116	PBY-5A	28E5728	1
-330	PBY-5	28E5050	1
-600	XPBY-5A	28E4810	1
LAST USED NO.	MODEL	NEXT ASSY.	REQ

REQUIREMENTS PER AIRPLANE

REPLACES — CALC WT.

DUPLICATED BY 28E5728 — ACT. WT.

LIST OF STANDARD UNLESS OTHERWISE SHOWN — SCALE 1"=1'-0"

STAMP PART NUMBER WHERE SHOWN

PART No								
	PARTS LIST PER ASSY.	LH REQ.	RH REQ.	LH REQ.	RH REQ.	LH REQ.	RH REQ.	
		-0	2	-3	-4	-5		

A C
NAVY NONE — HEAT TREAT.
NOTED — FINISH
9/6/39 — DRAFT — CHECK — STRUCT — MAT — APPROV — ENG

NAME CONDUIT INST - ELEC SYS - INTERPHONE - BULD "4 AFT
CONSOLIDATED AIRCRAFT CORP. SAN DIEGO, CALIF.

OPP. HAND
SIZE G
DWG 28E1020
SHT #2 of 2

SHEET #2 OF 2 SHEETS

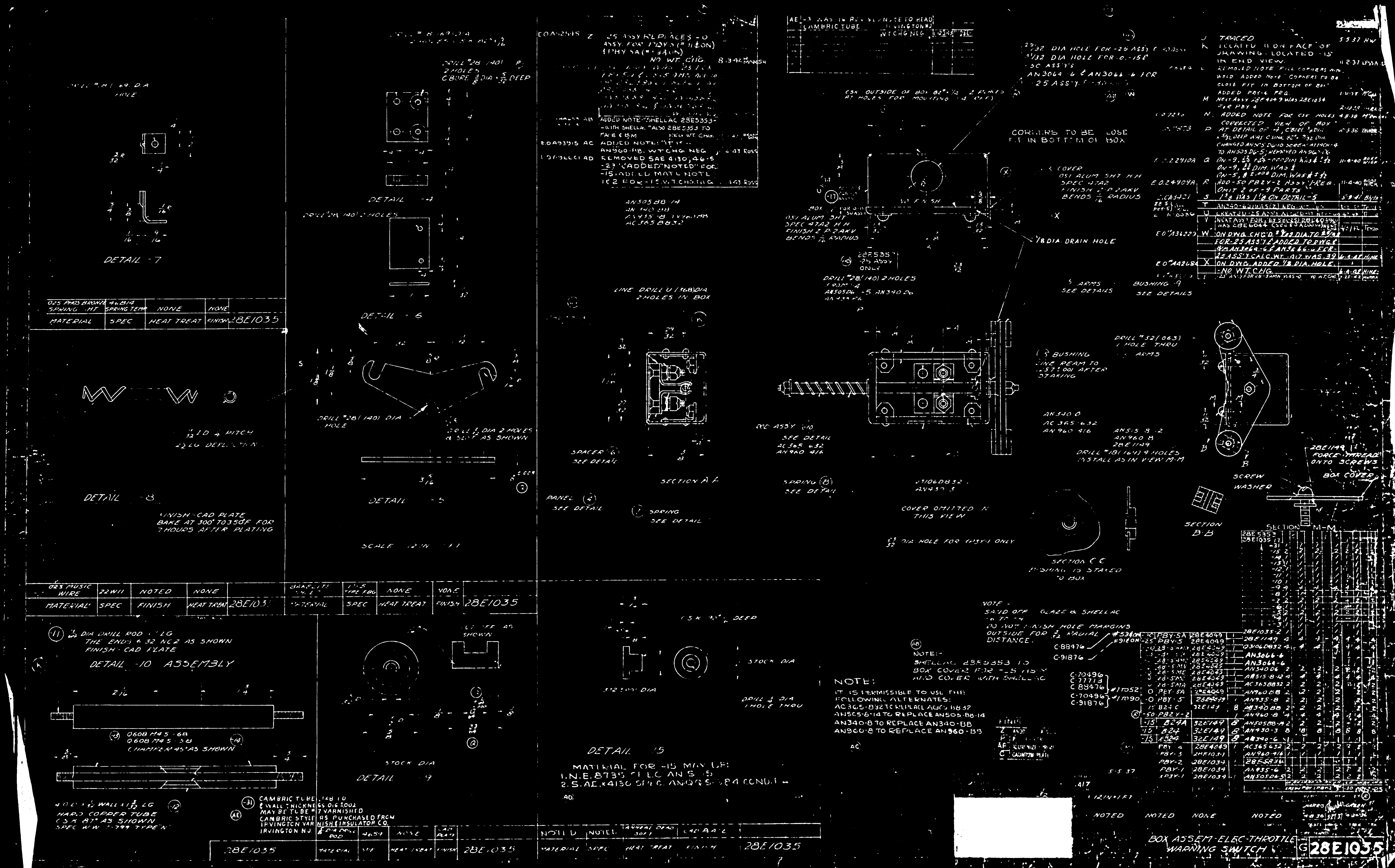

DETAIL -7
DETAIL -4
DETAIL -6
DETAIL -5
DETAIL -8
DETAIL -9
DETAIL -10 ASSEMBLY
DETAIL -15
DRILL #28 (140) 2 HOLES
C'BORE 3/8 DIA x 5/32 DEEP
DRILL #28 (140) DIA HOLE
DRILL 1/8 DIA 2 HOLES & SLOT AS SHOWN
FINISH - CAD PLATE
BAKE AT 300° TO 350°F FOR 7 HOURS AFTER PLATING
SCALE
MATERIAL
SPEC
HEAT TREAT
FINISH
NONE
NOTED
28E1035
.025 PHOS BRONZE SPRING
46B14
SPRING TEMP
.023 MUSIC WIRE
22W11
-11 DIA DRILL ROD
THE ENDS 6 32 NC2 AS SHOWN
FINISH - CAD PLATE
Q608 M4 5 - 68
Q608 M4 5 - 58
CHAMFER 45° AS SHOWN
HARD COPPER TUBE
CSK 87° AS SHOWN
-31 CAMBRIC TUBE .148 I.D.
& WALL THICKNESS .016 ±.002
MAY BE TUBE #7 VARNISHED
CAMBRIC STYLE AS PURCHASED FROM
IRVINGTON VARNISH & INSULATOR CO.
IRVINGTON N.J.
STOCK DIA
ADDED NOTE "SHELLAC 28E5353 - WITH SHELLAC" ALSO 28E5353 TO FACE & B/M NEG WT. CHG.
ADDED NOTE: "IT IS - AN960-B8. WT CHG. NEG
REMOVED SAE 4130, 46-S -23 "ADDED "NOTED" FOR -15. ADDED MATL NOTE 1 & 2 FOR -15 WT. CHG. NEG
AN505 B8-14
AN340 B8
AN935-8
AC365 B832
LINE DRILL U (368) DIA 2 HOLES IN BOX
SECTION A-A
SPACER -6 SEE DETAIL
PANEL -4 SEE DETAIL
SPRING SEE DETAIL
ROD ASSY -10 SEE DETAIL
SPRING -8 SEE DETAIL
CORNERS TO BE CLOSE FIT IN BOTTOM OF BOX
CSK OUTSIDE OF BOX 82° x 1/2 2 PLACES AT HOLES FOR MOUNTING
NO FINISH
BOX
.051 ALUM SHT
SPEC 47A2 H H
FINISH Z P 2AKV
BENDS 1/16 RADIUS
COVER
1/8 DIA DRAIN HOLE
28E5353 -25 ASSY ONLY
DRILL #28 (140) 2 HOLES
AN505D6 -5 AN340D6
ARMS SEE DETAILS
BUSHING -9 SEE DETAILS
DRILL #52 (063) 1 HOLE THRU ARMS
BUSHING LINE REAM TO .257±.001 AFTER STAKING
AN340-6
AC365-632
AN960-416
AN515-8-12
AN960-8
28E1149
DRILL #18 (169) 4 HOLES INSTALL AS IN VIEW M-M
COVER OMITTED IN THIS VIEW
SECTION C-C
BUSHING IS STAKED TO BOX
SECTION B-B
SECTION M-M
28E1149 FORCE THREAD ONTO SCREWS
BOX COVER
SCREW
WASHER
TRACED
LOCATED 11 ON FACE OF DRAWING. LOCATED -15 IN END VIEW.
ADDED NOTE FOR CSK HOLES
CORRECTED VIEW OF BOX AT DETAIL OF -4
ADD -50 PBZY-2 ASSY 1 REQ.
OMIT 2 OF -9 PARTS
ON DWG. ADDED 1/8 DIA. HOLE
-NO WT. CHG.
NOTE -
SAND OFF GLAZE & SHELLAC
DO NOT FINISH HOLE MARGINS OUTSIDE FOR 3/32 RADIAL DISTANCE.
NOTE:-
SHELLAC 28E5353 TO BOX COVER FOR -25 ASSY AND COVER WITH SHELLAC
NOTE:
IT IS PERMISSIBLE TO USE THE FOLLOWING ALTERNATES:
AC365-832 TO REPLACE AC365 B832
AN505-8-14 TO REPLACE AN505-B8-14
AN340-8 TO REPLACE AN340-B8
AN960-8 TO REPLACE AN960-B8
MATERIAL FOR -15 MAY BE:
1. N.E. 8735
2. S.A.E. X4130
PBY-5A 28E4049
PBY-5 28E4049
PBY-4 28E4049
PBY-2 28E1034
PBY-1 28E1034
XP3Y-1 28E1034
B24A 32E149
B24 32E149
XB24 32E149
.417
BOX ASSEM-ELEC-THROTTLE WARNING SWITCH
G 28E1035

SUPPLIES & EQUIPMENT CLASSIFICATION			
LET	ALTERATION	DATE	BY
D	TRACED	5-3-57	[redacted]
E	ADD'D -2 PLEXIGLASS & ADD'D REQ'MTS. 4-12 & NOT APPL. FOR -2	10-19-56	[redacted]
F	REMOVED -0, & -2 FROM DWG. & D/M. REMOVED 28E043-12 & -13 FROM NEXT ASSY.	3-15-57	[redacted]
G	IN B/M REPLACED SPEC. M.T.A. FINISH "COMM'L. MANUFACTURER'S STDS." WITH SPEC." P-41, GR.A." TO FACE ADDED NOTE." ALT. MAT FOR PLEXIGLAS ---." BRO'T RIGHT TO DATE.	WT. CHG. + WAS 5-8-57	[redacted]

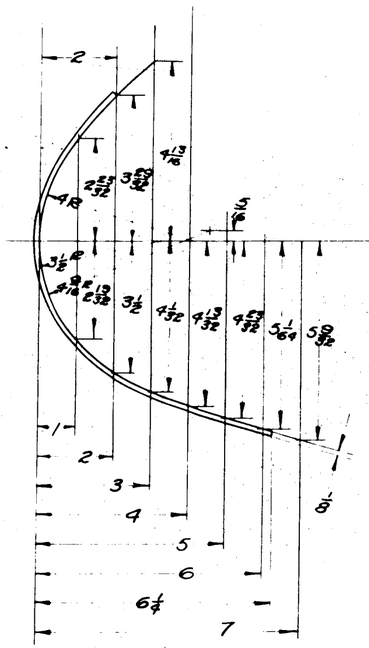

ACTUAL PLEXIGLASS
SCALE 6"=1'-0"

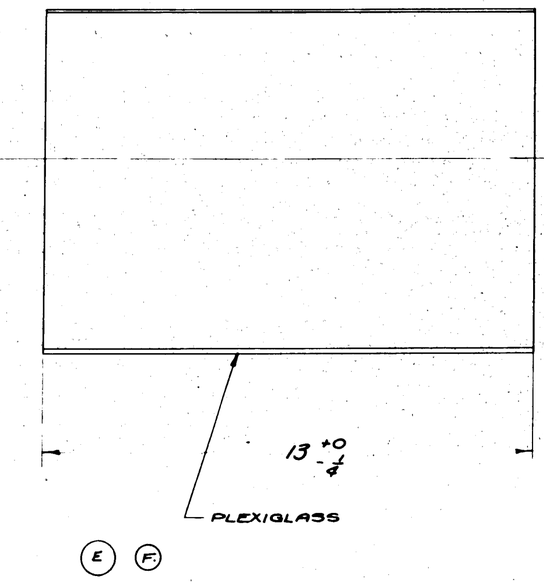

(E) (F)

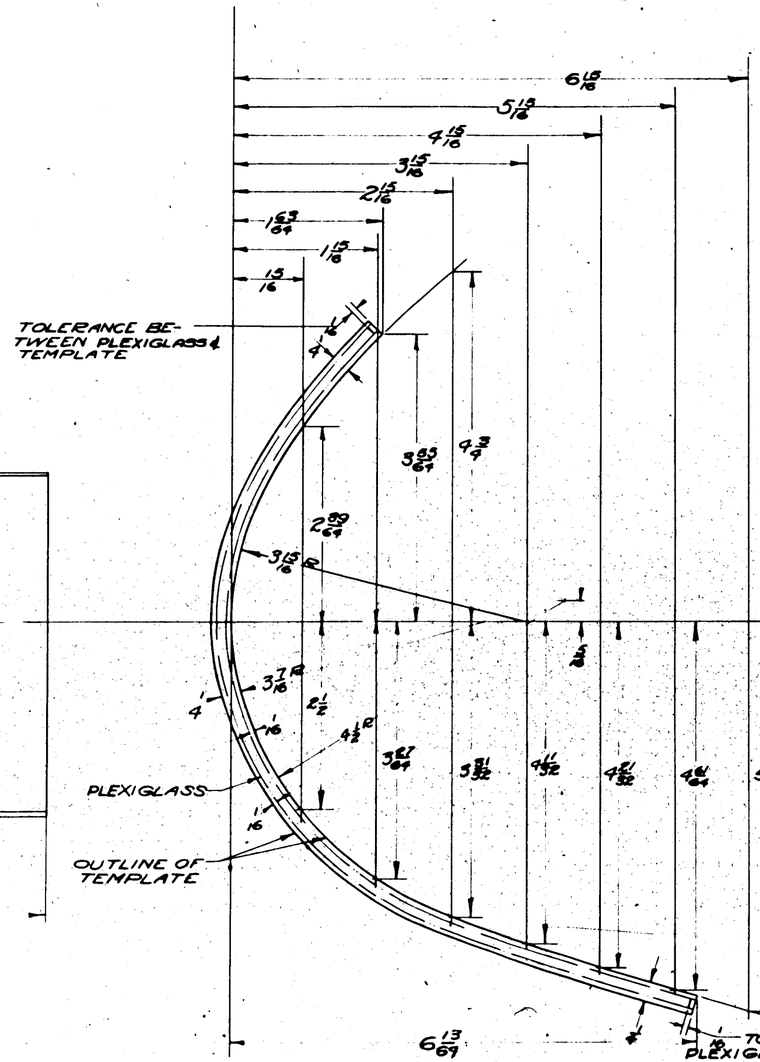

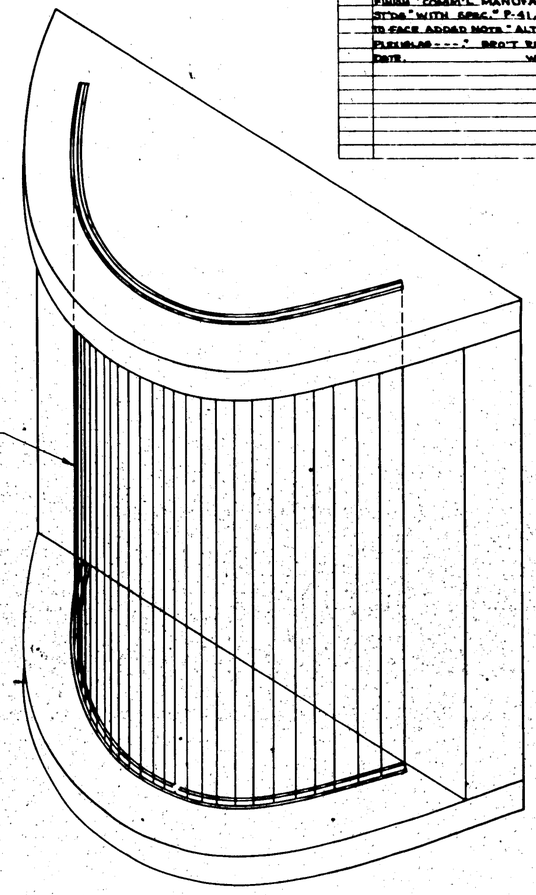

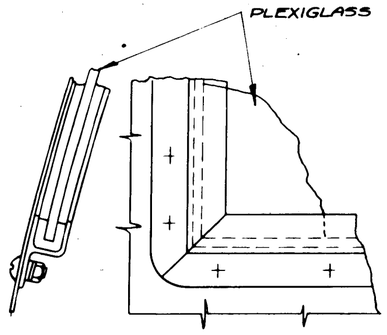

TYPICAL MOUNTING FRAME
FOR REF ONLY

TEMPLATE FOR PLEXIGLASS
SCALE 12"=1'-0"
LIMITS FOR GLASS INCORPORATED IN TEMPL. LIMITS ON THE VERT. DIM OF TEMPL. TO BE ±.010
LIMITS ON THE HORIZONTAL DIM. OF TEMPLATE TO BE +.090 -.010
LIMITS ON ½ WIDTH OF TEMPLATE TO BE +.000 -.010

(G) ALTERNATE MATERIAL FOR PLEXIGLAS MAY BE CELLULOSE ACETATE, SPEC P-41, GRADE B.

MATERIAL: 1/8 ± 1/32 THICK PLEXIGLASS TO BE FREE FROM STRIA & BUBBLES IN ACCORD WITH BEST COMMERCIAL PRACTICE

PURCHASE FROM ROHM & HAAS CO.
PHILADELPHIA, PENN.

NOTE
CONSTRUCT GAGE USING TEMPLATE TOP & BOTTOM SIMILAR TO THAT SHOWN IN SKETCH GAGE CAN BE CONSTBUCTED SO AS TO INCORPORATE THE LENGTH AND SIDE LIMITS OF GLASS. THE UPPER TEMPLATE TO BE IN LINE WITH THE LOWER TEMPLATE. BOTH TEMPLATES TO BE AT RIGHT ANGLES TO AVERTICAL. THIS GAGE INCORPORATES ALL THE ACCEPTABLE LIMITS. IF THE GLASS PANEL FITS IN THE GAGE AND IS WITHIN THE LENGTH LIMITS, THE GLASS WILL BE ACCEPTABLE.

	[redacted]	28E043	2&4	PBY-5B	28E043	2
	[redacted]	28E043	2&4	PBY-5A	28E043	2
	PBY-5	28E043	2	PBY-4	28E043	2
O.H.	MODEL	N.A.	REQ.	PBY-5	28E043	
	[redacted]	5-3-57		PBY-5A	28E043	
	APPROVED	DATE		PBY-5B	28E043	

REPLACES 28E042	CALC WT. 1.70	ACT WT.	O.H.	MODEL	NEXT ASSY.	REQ.
REPLACED BY	SCALE 6"=1'-0" 12"=1'-0"		REQUIREMENTS PER AIRPLANE			MAT.
LIMIT ON DIMENSIONS UNLESS OTHERWISE SPECIFIED ±	AC NAVY NOTED					PARTS LIST FOR ASSY.
[redacted]	MATERIAL	SPEC.	GRADE & HEAT TREAT	FINISH	DRAFT	CHECK	STAIR.	ENG.

CONSOLIDATED AIRCRAFT CORP. BUFFALO, N.Y.
STAMP PT. No. WHERE SHOWN

NAME COVER GLASS LANDING LIGHT CAVITY
OPP HAND
SIZE G
DWG. NO. 28E104

SUPPLIES & EQUIPMENT CLASSIFICATION			
LET	ALTERATION	DATE	BY
C	TRACED	6-7-37	KKS
D	INCORPORATED CO 4822 FOR CONST. "B"	8-23-37	KKS
E	REMOVED DRILL NOTE CALLING FOR 4 #19 HOLES IN -9 ONLY. REMOVED DIMS 3 1/16 & 5 1/2. CHANGED REQ PER AIRPLANE -9 ASSEMBLIES ON 28E2014-1006-1R DID ASSEMBLE ON 28E2014 ONLY. ADDED 28E 2014-136 TO NEXT ASSEMBLY FOR -D.		
F	IF NEXT ASSY IS 28E1014-8 THRU 28E1014-12 CHGD (K78P) TO K8001 FOR -8 & -9. 148 & 9 DIMS REPLACES 5 3/16 & 5 1/2 FOR -9. WT. CHG. .27 WAS .18	9-10-42	
G	ADDED 7 & 8 TO CONSIST OF -9 ASSY & 6. DIMS WAS & WT. CHG. NEW	10-6-42	
H	IN -9 ASS'Y, VIEW A-A DIM. 2 1/2 WAS 2. REMOVED NOTE "#18(.169)---DIA" ADDED NOTE "#16----AN442-B3" NO WT. CHG.	2-7-46	
J	ON FACE FOR -2 & -7 REPLACED "ANGLE K5401, 24ST, 46AB "WITH" Y-2-A27T. T.I. 12 3/8" & FOR -21 & -8 REPLACED "ANGLE K5401, 24ST, 46AB "WITH" Y-2-A27T. T.I. X 12 3/8". WT. CHG. NEG.	5-7-46	
K	PR. MAT'L. NOTE FOR -21 & -7 & FOR -34 & ADDED "OR, K5401 X 12 7/8, AL. AL. EXTR. SPEC. QQ-A-334-T." NO WT. CHG.	10-22-48	

POWER & LIGHT BOX 28E1030 (REF)

FOR -9 ASSY ONLY & DIM. 2 FOR -06 -15 ASSEMBLIES (H)

28E1096-3 (REF)

28E1073 (REF)

AN442-D4 (4) (-9 ASSY ONLY) (8) (-06 -15 ASSYS) (3) (F) (K) (J) Y-2-A27T X 12 3/8, OR K5401 X 12 3/8, AL. AL. EXTR., SPEC. QQ-A-334-T.

CHORD LINE

(-9 ASSY ONLY) (6) (-06 -15 ASSYS) 6 1/2

(-9 ASSY ONLY) (5) (-7) (-06 -15 ASSYS) (-2) (F) (K) (J) Y-2-A27T X 12 3/8, OR K5401 X 12 3/8, AL. AL. EXTR., SPEC. QQ-A-334-T

AN430-D4

JIG DRILL #19 (.169) 4 HOLES AC3660F692(4) REQ'D (2) EA. ON -7 & -8 ASSEMBLIES (H)

CARRIERS

E.O. #A53566

VIEW A-A

NOTE:- ALL BEND 3/16 R

28F309-3 (REF)

(3) .051 AL. ALLOY 24S SPEC. 47A40 COND. T

AN442-D3

DRILL #10 (.193) DIA 2 HOLES THRU BRACKETS ON INSTALLATION

DRILL #10 (.193) DIA 2 HOLES TO MATCH AN442-D3

(4) .051 AL. ALLOY 24S SPEC. 47A40 COND. T (OMIT ON CONN. "E")

SHIP

VIEW B-B

	-7	CB-5 MC	CBW5503	1					
	-7	CB-6M11	CBW5503	1					
	-7	CB-5MW	CBW3017	1					
	-7	CB-5MC		1	ACMLDP838				
	-7	PBY-6R		1	-9				
	-9	PBY-5	CBW3017	1	AN442-D3	C	5	2	4
EFF ALL	-9	PBY-6	CBW3017	1	AN442-D4	C	6	2	4
ALL 0454-0465, 0497-0498	-9	PBY-5	CBW3017	1	-7		1		
	-8	PBY-6	28E2014-155	1	-6		1		
(E)	-15	CONN. "E"	CBW5511-1R	1	-6		1		1
0466-0469, 0499-0503 INCL.	-21	PBY-5	28E2014-155	1	-5		1		1
	-20	PBY-2	28E2014	1	AN442-D3				
		PBY-1	28E1048	1	AN442-D3				

REPLACES	RAN APPROVED	6-7-37 DATE		PARTS LIST PER ASSY.	
REPLACED BY	BY			-0	-9
LIMIT ON DIMENSIONS UNLESS OTHERWISE SPECIFIED ± 1/64	CAL'D WT.	A.L.T.WT.	MODEL	NEXT ASSY. REQ.	PARTS
SCALE 6" = 1'0"	REQUIREMENTS PER AIRPLANE			MAT.	
				2-3-38	
NAVY AL. ALLOY SHT	Navgo	NONE	2-P-38P	MFG'D	6-1-37
MATERIAL	SPEC.	HEAT TREAT	FINISH	DRAFT	CHECK
CONSOLIDATED AIRCRAFT CORP. BUFFALO, N.Y.	NAME INST. - ELEC. - POWER & LIGHT, WING, BOX SUPPT.			OPP. HAND	
STAMP PT. No. WHERE SHOWN				SIZE G	DWG 28E1030

GP-GREEN PRIME	
FINISH	CODE
Z	[redacted]
P	
AP	
C	

880136

(-2) BOX L.H. SHOWN
(-3) BOX R.H. OPPOSITE

.040 ALUM. ALLOY SHEET 52S TYPE I X TEMP. A SPEC. M209

SPOT WELD BOX APPROX. 1/4 O.C.

NAF 39943-1 RECEPTACLE (GOVERNMENT FURNISHED) DRILL "28(.140) DIA. -2 HOLES IN BOX FROM SWITCH
3/4 DIA. -1 HOLE IN BOX

28E1092 AN 430 D2

28E1063 AN 430 D2

NAF 2136 30-1 SWITCH AN 515-D8-5, AN 340 D8 AN 935-8
1/4 DIA. -1 HOLE IN BOX
DRILL "18(.169) -2 HOLES IN BOX

DRILL "18(.169) -2 HOLES TO MATCH STOP NUTS

(-8) (T) COVER ASSY. SAME AS -4 EXCEPT DRILL HOLES TO MATCH 28E2010-8 BOX (REF.)

(-22) (PBY-3 ONLY)

COVER DETAIL (SAME AS -20 EXCEPT AS NOTED) BEFORE REWORKING TO OBTAIN ASSEM. -8 (S)

ON -4 & -5 ONLY

DRILL "18(.169) - 8 HOLES IN COVER TO MATCH 28E2010-9 & -10

(-16) L.H.
(-17) R.H.
(S)
COVER DETAIL (SAME AS -20 EXCEPT AS SHOWN) BEFORE REWORKING TO OBTAIN ASS'YS -12 & -13

COVER ASS'Y (INCL. -6) L.H. (-12) R.H. OPP. (-13)

LET	ALTERATION	DATE	BY
	TRACED ...	4-8-41	
S	REMOVED ... FOR -14, -15 & -18.	10-15-41	
	ASS'DAND -16, -17, -24 -21, & -22 ...		
	DASH NOS FOR COVER ASS'Y ...		
T	NOTE ON -8 WAS "SAME AS -4 EXCEPT AS SHOWN & INCL. -6."	7-29-31	
U	ON -6 CHGD. SPOTWELD SPACING FROM "1/2" TO 1".	11-4-42	
V	1/32 TOLERANCE WAS ±.010	3-17-42	
W	IN 3/16 REMOVED REFER. ANB40D, 28E1149, & 28E10832, AN442-AD3 (ADDED/REM) TO THESE PARTS ON PAGE OF DWG. No WT. CHG.	3-18-42	
X	LIMITED -8-9 FOR PBY-5A, UP TO NO 9854 & "8004. NO WT. CHG.	4-4-42	

(-4) COVER ASSEM. (INCL. -6) L.H. SHOWN
(-5) R.H. OPPOSITE

(W) 22 F 24-2, AN960-8, 28E1149 DRILL "18(.169) HOLES IN COVER TO MATCH Q3106 D832 (REF.)

28E1091-1 USED ON 28E1091
28E1093-3 USED ON 28E1091
28E1093-4 USED ON 28E1091-1

(-20) L.H.
(-21) R.H.
COVER DETAIL BEFORE REWORKING TO OBTAIN ASSEMBLIES -4 & -5
MADE FROM .040 AL. ALLOY SH. TYPE II TEMP. A M209
(S)

1 25/32 DIA. -1 HOLE
31/32 DIA. -1 HOLE
2 3/32 DIA. -1 HOLE
1 15/32 DIA. -1 HOLE

DRILL "18(.169) - 4 HOLES

28E1094 AN 520 D6-5 DRILL "28(.140) 2 HOLES IN BOX

1/32 DIA. -2 HOLES

28E1079 (NS6) AN 515 D8-5 DRILL "18(.169) 2 HOLES IN BOX
28E1114 AN 520 D6-5 DRILL "28(.140) 2 HOLES IN BOX

28E1083 (PB3) AN 515 D8-5 DRILL "18(.169) -2 HOLES IN BOX

NAF 39867 TYPE C-1 SWITCH
AN 520 D10-10
AN 935-10
AN 365 D10
AN 960-D10
DRILL "10(.194) - 6 HOLES IN BOX

TYPICAL COVER ATTACHMENT
SCALE 12"-1'0"

(-7) WIRE ASSEMBLY
ALP #4 WIRE APPROX. 2 5/8 IN. LONG
NAF 29010-1

NO FINISH

1/32 DIA 2 HOLES

	A	B
28E1091-1	3 1/8	1 1/8
28E1091	3 1/8	2 1/8
ASSEMBLY NO.	DIM. A	DIM. B

FINISH NOTE :—
FINISH BEFORE ADDING SCREWS & STOPNUTS. 2-P-28AV TOUCH UP SCREWS & STOPNUTS LATER. DO NOT FINISH HOLES ON OUTSIDE FOR 1/32 RADIUS DISTANCE.

NOTES :—
SPOT WELD 30 MMS.
ALL BENDS 1/8 R.

(6)
ANGLE 1/2 x 1/2 x .064 AL. ALLOY SH. TYPE II TEMP A SPEC. 47A11 SPOT WELD APPROX. 1" O.C.
(U)

-8	PBY-5A	28E4047			28E1193-2	
-8	PBY-5A	28E4047				
-8	PBY-5	28E4047		(28)	28E1114	
-8	PBY-5	28E4047		(NS6)	28E1094-1	
-8	PBY-5	28E4047		(28)	28E1094	
-8	PBY-5	28E4047			28E1093-1	
-5	PBY-5	28E4047		(NS6)	28E1093	
-5	PBY-5	28E4047		(NS6)	28E1092	
-5	PBY-5	28E4047		(PB3)	28E1079-1	
-5	PBY-5	28E4047			28E1079	
-8	PBY-4	28E4047			28E1063	
-5	PBY-4	28E4047				
-13	PBY-5A	28E4047-13			-16	
-12	PBY-5A	28E4047-12			28E1091-1	
-8	PBY-3	28E4047			-21	
-8	PBY-3	28E4047-8			-20	
-5	PBY-2	28E4047			-7	
-4	PBY-2	28E4047			-6	
-1	PBY-1	28E4047			-3	
	PBY-1	28E1014			28E1091-2	

MAF 2136 30-1	1	1					
MAF 39867	1	1					
MAF 39943-1	1	1					
MAF 29010-1	2	2					
AN 960-D10	6	6					
AN 935-10	6	6					
AN 935-8	6	2					
AN 520-D10-10	6	6					
AN 520-D6-5	4	4					
AN 515-D8-5	6	6					
AN 430-D2	4	4					
AN 365-D10	6	6					
AN 340-D8	2	2					
28E1193-2	1						
-4	1						
-3	1						
28E1114	1						
28E1094-1	1						
28E1094	1						
28E1093-1	1						
28E1093	1						
28E1092	1						
28E1079-1	1						
28E1079	1						
28E1063	1						
28E4047-17							
-16	1						
28E1091-12	1						
-21	1						
-20	1						
-7	1						
-6	2	2	2	2	4	8	2
-3	1						

BAY-BLACK ASPHALT VAR.

UP TO "NO 9854 & "8004. MCR 342-10 D(+)

USED ON SHIPS #1 TO #8 INCL. & #44 & #46 ONLY

NOT USED ON SHIPS NOTED ABOVE

REPLACES						
REPLACED BY						
LIMIT ON DIMENSIONS UNLESS OTHERWISE SPECIFIED ± 1/32						
[redacted]						
4-57 CALC. WT.	ACT. WT.	O.H.	MODEL	NEXT ASSY.	GRD	PARTS
SCALE 8" = 1'0" AND AS NOTED		REQUIREMENTS PER AIRPLANE				MAT.
AC						
NAVY NOTED		NOTED	NONE	NOTED		
MATERIAL		SPEC.	HEAT TREAT	FINISH		

APPROVED 6-6-41 DATE
DRAWN 4-27-38 CHECK 6-7-41 ENG.

CONSOLIDATED AIRCRAFT CORP. BUFFALO, N. Y.

NAME Box ASS'Y - ELEC. - ENGINE TERMINAL JUNCTION

OPP. HAND 28E1091-1
DWG. NO. G 28E10

LET	ALTERATION	DATE	BY
E.O. #AE2150 N	REDRAWN-MODEL-308-40 ASSY'S NEG'N CHG	10-29-42	WAH/GR
D	NOTE (1) WAS "00---DISTANCE" (2) WAS FINISH--DRILLING" REMOVED NOT APPLICABLE--"P 1/42-11 N° CHG	10-28-42	WAH/GR

SEE DETAIL C FOR -308-40 ASSY

$\frac{7}{32}$ D FOR -2,4,50,30&40
$1\frac{5}{32}$ D FOR -38-5

$\frac{23}{32}$ D FOR -2,3,5&30
$\frac{31}{32}$ D FOR -0

$\frac{11}{32}$ C FOR -50

$\frac{3}{32}$ NO FINISH

1

$1\frac{1}{4}$

$1\frac{1}{8}$

$\frac{23}{32}$ D FOR -4,40,&50

$\frac{61}{64}$ D FOR
AN3064-4(1) } FOR-40&-30
AN3066-4(1) }

$1\frac{3}{4}$

$\frac{5}{8}$

$1\frac{7}{32}$ D FOR -48-40
$1\frac{15}{32}$ D FOR -50
$\frac{61}{64}$ D FOR -30
AN3064-4 } FOR-30
AN3066-4 }

$\frac{7}{32}$ C FOR -0&-48-30
$\frac{3}{32}$ C FOR -3
$\frac{11}{32}$ D FOR -50
$\frac{61}{64}$ D FOR -40
AN3064-4(1) } FOR -40
AN3066-4 }

$\frac{3}{32}$ C FOR -0
$\frac{15}{32}$ C FOR -38-5

(-0) FOR -0
(-1) FOR -2
(-3) FOR -3
(-5) FOR -4
(-10) FOR -5
(-12) FOR -50
(-14) FOR -30
(-15) FOR -40

#31 (.120 D, 12 HOLES)
G6202-2(1)
ANS15-4-8(2)
AC365-440(2)
G7102-AL4(2)

G6202-2 (REF.)

DETAIL D

FINISH CODE	
Z	ANODIC TREATMENT
P	P-27 PRIMER
AP	ALUMINIZED PRIMER
C	CADMIUM PLATE
GP	GREEN PRIME

PART NO.	STOCK	MATERIAL	SPEC	LH REQ	RH REQ	LH REQ	RH REQ	LH REQ	RH REQ
-2	SS-5ME,MN	2SE5647		1		G6202-2			
-4	SB-5MA,MC	2SE5647		1		AN515-4-8			
-3	2B-5ME	28E1013		1		AC365-440			
-5	SB-5A,MC	28E5663		1		G7102-AL4			
-4	SB-5A,MN	28E5663		1		AN3064-4			
-1	PBY-5A	28E5663		1		AN3066-4			
-50	PBY-5A	28E5663		1					
-4	PBY-5A	28E5663		1					
-30	PBY-5	28E1013		1					
	PBY-4	28E1013		1					
	PBY-3	28E1013		1					
	PBY-2	28E1013		1					
	PBY-1	28E1013		1					

-1 COVER PART OF NAF 39923-1
-15 MAKE FROM NAF 39923-1
-11
-12
-10
-9
-3
-7
-8 MAKE FROM NAF 39923-1

ASSY DASH NO. | MODEL | NEXT ASSY | REQ
REQUIREMENTS PER AIRPLANE

REPLACES 28E 20 3/11/38 50 CALC WT
REPLACED BY ACT WT

LIMITS AS NOTED FOR UNLESS OTHERWISE SPECIFIED | SCALE 12" = 1'0"
1/32
STAMP PART NUMBER WHERE SHOWN

PARTS LIST PER ASSY

A.C. NAVY NOTED HEAT TREAT | NOTED FINISH | TIMMS 1-12-38 DRAFT | STIER CHECK | STRUCT | MAT | APPROV | ENG

NAME BOX ASSEMBLY-ELEC-BULKHEAD NO.6 JUNCTION

CONSOLIDATED AIRCRAFT CORP. SAN DIEGO CALIF

OPP HAND | DWG G SIZE | 28E1120

LET	ALTERATION	DATE	BY
P	REVISED & REDRAWN	5-4-41	GRUMM
Q	AN515D8-6 W AS AC515 D6-6	4-11-41	MC/GL
	AC 365D832 ADDED. D/M		
	OF -10 BOX CHGD FROM 1 3/32		
	TO 1 3/32 DIA HOLE IN		
	-10 BOX CHGD TO 1 1/32		
	AC 340 D6 & AN515-6 REMOVED		
R1	CERTIFIED -66 ASSEMBLY CHANGE	5-12-41	W/KEN
	-50 EXCEPT -11 CHANGES - 9		
S	29/32 DIA HOLES IN -8 WAS NOTED FOR -3	5-16-41	R.GEER
T	CHANGE NOTE "TO LOAD" 29/32 DIA (2) HOLES IN -9 & -11 BOXES ONLY" TO "DRILL #18 DIA (2) HOLES IN -9 & -11 BOXES ONLY"	6-27-41	GRUMM
U & V	CREATED -65 ASSY. -1C FOR -55	7-28-41	W/KEN
	-1C FOR -55 WAS -1D FOR -55 ASSY		
V	ADDED V/8 WATER DRAIN NOTCH	8-7-41	GRUMM
W	ADDED 2BE4015(1), AN515D8-5(2)		
	FOR -50 ASSY & LOC DIMS 1 7/8		
	1 3/4, & NOTE "DRILL #18 (.169)"		
	IN -9 ONLY" — (WT CHG NEG.)	8-22-42	GRUMM
X	NAF1120-1(1) WAS NAF31015-28)		

LET	ALTERATION	DATE	BY
	ON -50-55-60 & 65 WAS (NAF)28		
	-2(1) WAS NAF31019-1(1) ON -2 ASSY. NO WT. CHG	10-10-42	Ross
Y	CREATED -66 ASSY FOR PBY-5 ADDED NOTE: SHELLAC -66 ASSY. NEG. WT CHG	12-15-42	DOSS
Z	ADDED DETAIL "A" FOR -66 ASSY	6-20-43	WINTER
AA	-50 ASSY C91876-1 -90 REPLACED BY -66 C91876	4-29-44	WINTER

PBY-5A & PBY-5A WAS

PBY, PBY-5 EQ A-039

PBY-5, PBY-5A, OS-10, 28B-6 MC, 28B-5AMC FOR A4A001, 28-5AM: 5NC

EQ A72530

E.O A57268

S.

29/32 DIA HOLE IN -9, -10, & -11 BOX ONLY

23/32 DIA. (2) HOLES IN -9 & -11 BOXES ONLY

31/32 DIA

NO FINISH 3/32

1 5/32

1 5/8

(R) #18 (.169 DIA.) - 2 HOLES (TO MATCH HOLES IN 2BE4015 (REF) IN -9 ONLY. 2BE4015 (1) AN515D8-5 (2)

AN 515 D8-6
AC 365D832

1 1/8

7/8

(V) (APPROX.) 1/8

DRILL #18 (.169) 4 HOLES

1 1/8

3/4

(W)

23/32 DIA HOLE IN -11 ONLY

1 3/32 DIA. HOLE IN -10 BOX ONLY

2BE064
AC 425-D2
C SINK INSIDE OF COVER

Q3511-6

NAF 21030-1

(X)

NAF1120-1(1) FOR -50-55-60, 65 ASSY'S.
NAF 39943-1-0 ASSY ONLY
NAF1120-2(1) FOR -2 ASSY PBY-3 ONLY

LIGHT RECEPT OFF

LOCATION OF NAMEPLATES AS SHOWN FOR ALL SHIPS EXCEPT 28-SME FOR 28-SME SEE 28C5521

1 21/32

31/44

1 1/16 DIA HOLE

31/32

21/44

21/32

(-7) COVER

(-18) COVER

NAF1077-13 (1)
AN515 4-6 (3)
AN935-4 (3)
AN340 4 (3)

#31 (.120) DIA. 4 HOLES.

(Z) DETAIL "A"
FOR -66 ASSY'S ONLY

NOTCH APPROX 1/8 WITH #4 RAT-TAIL FILE FOR WATER DRAIN (V)

1 3/4

BEND ℄ (APPROX)

(W) 1 3/4

1 7/32 DIA. HOLE IN -9 & -11 BOXES
1 5/32 DIA HOLE IN -10 BOX.

1 1/4

SHELLAC 2BE5351 TO INSIDE OF 2BE1122-9 BOX ON -66 ASSY.
(Y)

BOX
(8) FOR -0 & -2 ASSY'S
(9) FOR - 50 & 66 ASSY'S
(U) (-10) FOR - 55 & -65 ASS'Y
mill FOR - 60 ASS'Y

1/2 — 2 1/4 — 1 — 1 1/2

2BE1122

DRILL #18 (.169) DIA 4 HOLES

25/32 — 21/32 — 21/32 — 1

29/32

1 13/16

DRILL #28 (.1405) DIA 2 HOLES

13/16 DIA. (1) HOLE.

-7 COVER

DRILL 1/2 DIA. (2) HOLES

FINISH CODE

Z	ANODIC TREATMENT
P	P-27 PRIMER
AP	ALUMINIZED PRIMER
C	CADMIUM PLATE

CAC #173 (1)
C.# 88476

MCR113(2) MURRAY C.91876
APPLICABLE ONLY TO PBJ 5A 32 AL #
2680, 2287 # 2498

C-7713 -134 SHIPS
8804586 - 30 SHIPS
C70496

-50	PBY-5A	2BE1013	1
-66	PBY-5	2BE1013	1
-60	28-5AMN	2BE5647	1
-60	PBJ-5A	2BE1013	1
-60	28-5MN	2BE5647	1
-65	28-5MA	AN5527	1
-55	28-5MK	2BE5671	1
-65	28-5AMK	2BE5647	1
-65	28-5MK	2BE5647	1
-30	PBY-5A	2BE1013	1
-50	PBY-5A	2BE1013	1
-30	PBY-5	2BE1013	1
-2	PBY-4	2BE1013	1
-2	PBY-3	2BE1013	1
-2	PBY-2	2BE1013	1
-0	PBY-1	2BE1013	1

PART NO	STOCK	MATERIAL	SPEC.	REQ -0	REQ -2	REQ -50-55-60-65	REQ -66	REQ
2BE1122-18								
AN340-4						3		3
AN935-4						3		3
AN515-4-6						3		3
Q3511-6				/	/	/	/	/
AN515D8-5						2		2
AN 935-6						4	4	4
AC 935-D2						4	4	4
AN515D8-6						4	4	4
AN 340-D6						4	4	4
AC365-D832						4	4	4
NAF1120-1					1	1	1	1
NAF 39943-1				/	-	-	-	-
NAF1077-13				-	/	-	-	-
NAF1120-2			FOR PBY-3 ONLY (-2 ASSY)	-	/	-	-	-
NAF 39939-1				2	2	2	2	2
2BE4015						/	/	/
2B2084				/	/	/	/	/
2BE5351								
-11						/	/	/
-10						/	/	/
-9						/	/	/
-8				-	-	/	/	/
2BE1123-7				/	/	/	/	/
-6								

AC		3-6-41	Booher
NAVY NONE	NOTED	5-6-41	GALBR
HEAT TREAT	FINISH	DRAFT	ENGR

BATCH
MAT. LAYOUT SEQ.
OPP HAND
DWG. G SIZE

NAME BOX ASSEMBLY-ELEC. BULKHEAD #7 SWITCH

CONSOLIDATED AIRCRAFT CORP. SAN DIEGO, CALIF.

28E1122

NOTE
DO NOT FINISH HOLE MARGINS OUTSIDE ONLY, FOR 3/32 RADIAL DISTANCE
FINISH - P 27 AKV AFTER DRILLING
REMOVE ANODIC FILM AROUND HOLES FOR 3/32
REMOVE PIN #2 FROM RECEPTACLE
MAKE - 8, 9, 10 & -11 BOXES & -7 COVER FROM NAF 39923-1 BOX ASSY

NOTE
THIS DRW'G. REPLACES 28E1122 OF 3-16-36

2211382

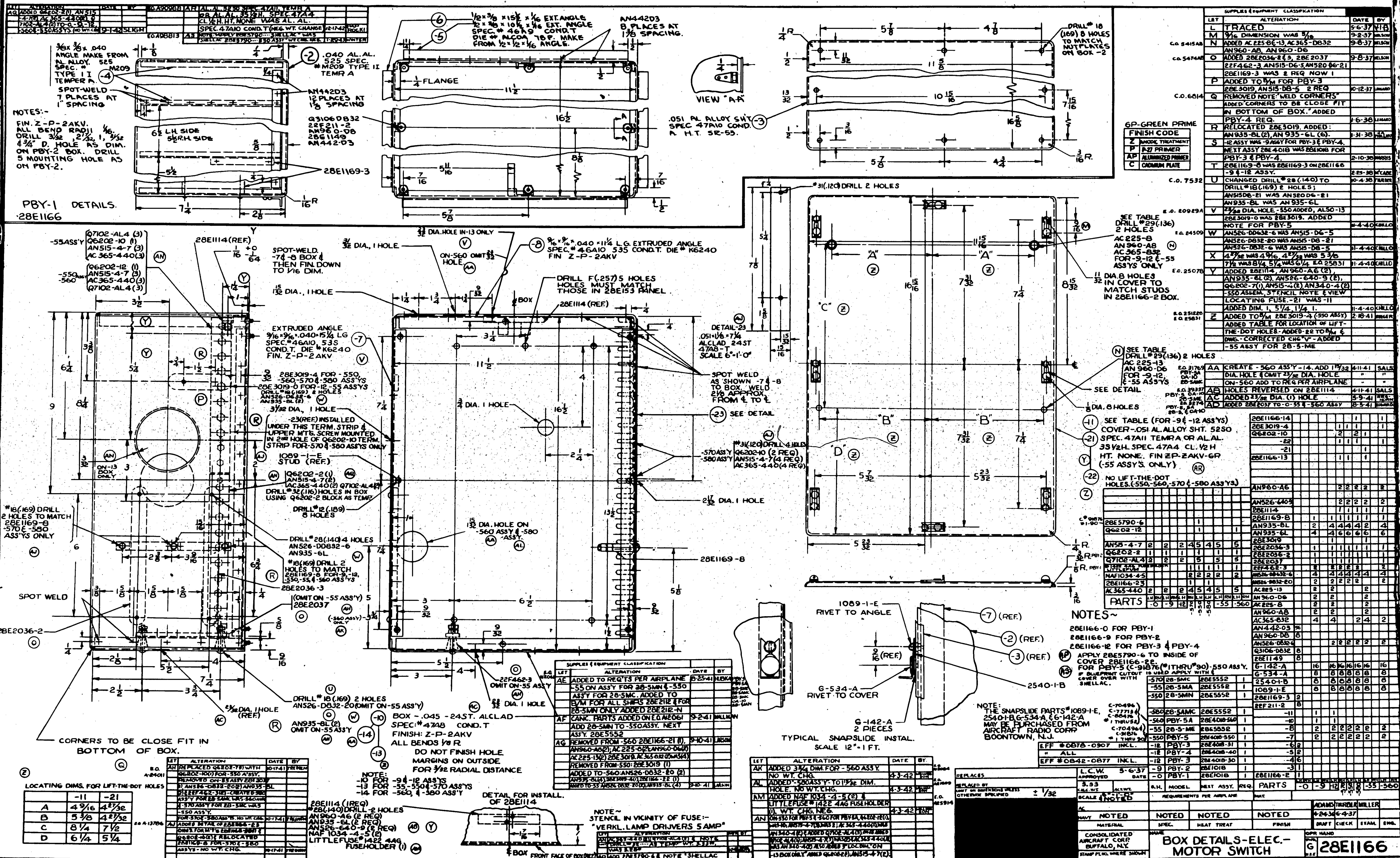

LOCATING DIMS. FOR LIFT-THE-DOT HOLES

	-11	-21
A	4 9/16	4 27/32
B	5 3/8	4 27/32
C	8 1/4	7 1/2
D	6 1/4	5 1/4

NOTES~

28E1166-0 FOR PBY-1
28E1166-9 FOR PBY-2
28E1166-12 FOR PBY-3 & PBY-4
(AP) APPLY 28E5790-6 TO INSIDE OF COVER 28E1166-22.
(AS) FOR PBY-5 (C-91876 (#1 THRU #90) -550 ASS'Y. IF BLUEPRINT CUTOUT IS USED APPLY WITH & COVER OVER WITH SHELLAC.

SUPPLIES & EQUIPMENT CLASSIFICATION

LET	ALTERATION	DATE	BY
L	TRACED	5-6-37	V.I.B.
M	9/16 DIMENSION WAS 5/16	9-2-37	NELSON
N	ADDED AC225-8 & -13, AC365-D832 AN960-A8, AN960-D6 (C.O. 5415AB)	9-8-37	NELSON
O	ADDED 28E2036-2 & 3, 28E2037 22F462-3, AN515-D6-5, AN520-D6-21 28E1169-3 WAS 2 REQ NOW 1 (C.O. 5474AB)	9-8-37	NELSON
P	ADDED TO B/M FOR PBY-3 28E3019, AN515-D8-5 2 REQ	10-12-37	LAMARD
Q	REMOVED NOTE "WELD CORNERS" ADDED "CORNERS TO BE CLOSE FIT IN BOTTOM OF BOX." ADDED PBY-4 REQ. (C.O. 6814)	1-6-38	LAMARD
R	RELOCATED 28E3019. ADDED: AN935-8L (2), AN935-6L (6).	1-31-38	PHILLIPS
S	-12 ASSY WAS -9 ASSY FOR PBY-3 & PBY-4. NEXT ASSY 28E4018 WAS 28E1018 FOR PBY-3 & PBY-4.	2-10-38	HARRIS
T	28E1169-8 WAS 28E1169-3 ON 28E1166 -9 & -12 ASSY.	2-25-38	M'CABE
U	CHANGED DRILL # 28 (.140) TO DRILL # 18 (.169) 2 HOLES; AN515D8-21 WAS AN520D6-21 AN935-8L WAS AN935-6L (C.O. 7532)	10-4-38	THURBER
V	23/32 DIA. HOLE -550 ADDED, ALSO -13 28E3019-0 WAS 28E3019. ADDED NOTE FOR PBY-5 (E.O. 20929A)	11-4-40	CHILLO
W	AN526-DD632-6 WAS AN515-D6-5 AN526-D832-20 WAS AN515-D8-21 AN526-D832-6 WAS AN515-D8-5 (E.O. 24509)	11-4-40	CHILLO
X	4 27/32 WAS 4 9/16, 4 27/32 WAS 5 3/8 7 1/2 WAS 8 1/4, 5 1/4 WAS 6 1/4 E.O. 25831	11-4-40	CHILLO
Y	ADDED 28E1114, AN960-A6 (2), AN935-6L (2), AN526-640-9 (2), Q6202-7 (1), AN515-4 (2), AN340-4 (2) -550 ASSEM. STENCIL NOTE & VIEW LOCATING FUSE. -21 WAS -11 ADDED DIM. 1, 5 1/4, 1 1/4, 1. (E.O. 25078)	11-4-40	CHILLO
Z	ADDED TO B/M 28E3019-4 (-550 ASSY) ADDED TABLE FOR LOCATION OF LIFT-THE-DOT HOLES - ADDED -22 TO B/M & DWG. - CORRECTED CHG "V" - ADDED -55 ASSY FOR 28-5-ME (E.O. 251220, E.O. 25831)	2-18-41	SINGER
AA	CREATE -560 ASS'Y -14. ADD 1 15/32 DIA. HOLE & OMIT 23/32 DIA. HOLE ON -560 ADD TO REQ PER AIRPLANE (E.O. 31769 PBY-5A OA-10 28-5AMC)	4-11-41	SALS
AB	HOLES REVERSED ON 28E1114 (E.O. 39337 PBY-5 OA-10 28-5ME)	4-11-41	SALS
AC	ADDED 23/32 DIA. (1) HOLE (E.O. 3274 PBY-5, 5A 28-5, & OA-10)	5-9-41	HORN
AD	ADDED 28E2037 TO -0 -55 & -560 ASSY	8-5-41	EDWARDS

LET	ALTERATION	DATE	BY
AE	ADDED TO REQ'TS PER AIRPLANE -55 ON ASS'Y FOR 28-5MN & -550 ASS'Y FOR 28-5MC. ADDED TO B/M FOR ALL SHIPS 28E2112 & FOR 28-5MN ONLY ADDED 28E2112-N	8-25-41	HUBKA
AF	CANC. PARTS ADDED ON E.O. A12061 ADD 28-5MN TO -550 ASSY. NEXT ASS'Y 28E5552	9-2-41	WALLMAN
AG	REMOVED FROM -560 28E1166-21 (1). AN960-A8 (2); AC225-8 (2); AN960-D6 (2) AC225-13 (2) 28E3019, AC365-832 (2) WAS (4) REMOVED FROM -550: 28E3019 (1) ADDED TO -560: AN526-D832-20 (2) AN935-8L (4) 28E3019-4 (1) 28E1166-22 (1) ADDED TO -55 AN526-D832-20 (2); AN935-8L (4)	9-10-41	LARSON

LET	ALTERATION	DATE	BY
AH	REPLACED Q6202-7 (1) WITH Q6202-10 (1) FOR -550 A'SSY. REMOVED ON -55 ASSY 28E2037 (1) AN526-D832-20 (2) AN935-8L (2) 22F462-3 (2) - CREATED -580 ASS'Y FOR 28-5AMC WAS -560 AND & -570 ASS'Y FOR 28-5MC WAS -550 ASS'Y. FOR -570 & -580 ASS'YS. NO WT. CHG. (E.O. A-24011)	10-17-41	FREEMAN
AJ	ADDED DETAIL OF 28E1166-23 DIM'S. FOR M'T'G 28E1169-8 & Q6202-10 (2) & RELOCATED 28E1169-8 FOR -570 & -580 ASS'YS - NO WT. CHG. (E.O. A-13786)	10-17-41	FREEMAN

LET	ALTERATION	DATE	BY
AK	ADDED 3 3/4 DIM. FOR -560 ASSY. NO WT. CHG.	4-3-42	
AL	ADDED "-580 ASS'Y" TO 1 15/32 DIM. HOLE. NO WT. CHG.	4-3-42	
AM	ADDED NAF 1034-4-5 (2) & LITTLEFUSE # 1422 4AG FUSEHOLDER (1). WT. CHG. NEG. (E.O. A25914)	4-3-42	
AN	ON -550 FOR PBY-5 & -560 FOR PBY-5A, Q6202-12 (1) WAS -10; AN515-4-7 (3) WAS 2; AC365-440 (3) WAS 2; AN340-4 (2) & ADDED Q7102-AL4 (3) WAS ADDED Q7102-AL4 (1); AN515-4-7 (3) WAS (2) AC365-440 (3) WAS AN340-4 (2) ALSO ADDED 3" LOC. DIM. ON -13 BOX ONLY. ADDED Q6202-2 (1); AN515-4-7 (2);		

LET	ALTERATION	DATE	BY
AN	AC365-440 (2) Q7102-AL4 (2) & NOTE DRILL # 32 ---- AS TEMP. WT. 3.33 W. WAS 3.28		
AQ	ADD 28E5790-6 & NOTE "SHELLAC ... NEW WT. CHG.		
[illegible]	[illegible]		

LET	ALTERATION	DATE	BY
AG	ADDED Q6202-2 (1), AN515-4-7 (2), AC365-440 (2) Q7102-AL4 (2) TO -0, -9 -12, -560 & -550 ASSYS (NO WT. CHG.)	9-1-42	SLIGH
AR	AL. AL. 52SO SPEC. 47A11, TEMP A OR AL. AL. 3S 1/2 H. SPEC. 47A4 CL 1/2 H. HT. NONE WAS AL. AL. SPEC. 47A10 COND. T (NEG. WT. CHANGE) (E.O. A90988)	12-17-42	ROCKI
AS	NOTE: "APPLY 28E5790 ... SHELLAC" WAS "SHELLAC 28E5790 ... 550 ASSY" WT. CHG. NEG. (E.O. A98813)	1-20-43	WINTER

Parts quantities, assemblies -0, -9, -12, -570, -550, -580, -55, -560 (values listed left to right as printed):

PARTS	Quantities
AN515-4-7	2, 2, 2, 4, 5, 4, 5, 5
Q6202-2	1, 1, 1, 1, 1, 1
Q7102-AL4	2, 2, 2, 5, 5, 5
LITTLEFUSE # 1422 4AG FUSEHOLDER	1, 1, 1, 1, 1
NAF1034-4-5	2, 2, 2, 2, 2
28E1166-23	1, 1
AC365-440	2, 2, 2, 4, 5, 4, 5, 5
28E5790-6	1
Q6202-12	1, 1

PARTS	Quantities
28E1166-14	1, 1
28E3019-4	1, 1, 1, 1
Q6202-10	2, 2, 1
-22	1, 1, 1, 1
-21	1
28E1166-13	1, 1, 1
AN960-A6	2, 2, 2, 2, 2
AN526-640-9	2, 2, 2, 2, 2
28E1114	1, 1, 1, 1, 1
28E1169-8	1, 1, 1, 1, 1, 1, 1
AN935-8L	2, 4, 4, 4, 4, 2, 4
AN935-6L	4, 4, 6, 6, 6, 6, 6
28E3019	1, 1
28E2036-3	1, 1, 1, 1, 1, 1, 1
28E2036-2	1, 1, 1, 1, 1, 1, 1
28E2037	1, 1, 1, 1, 1
22F462-3	2, 2, 2, 2, 2, 2
AN526-DD632-6	4, 4, 4, 4, 4, 4, 4
AN526-D832-20	2, 2, 2, 2, 2, 2
AC225-13	2, 2, 2
AN960-D6	2, 2, 2
AC225-8	2, 2, 2
AN960-A8	2, 2, 2
AC365-832	4, 4, 2, 4, 2
AN442-03	96
AN960-D8	8
AN526-D832-6	2, 2, 2, 2, 2, 2
Q3106-D832	8
28E1149	8
G-142-A	16, 16, 16, 16, 16, 16, 16
G-534-A	8, 8, 8, 8, 8, 8, 8
2540-1-B	8, 8, 8, 8, 8, 8, 8
1089-1-E	8, 8, 8, 8, 8, 8, 8
28E1169-3	2
22F211-2	8
-11	1, 1
-10	1, 1
-8	2, 2, 2, 2, 2, 2, 2
-7	2, 2, 2, 2, 2, 2, 2
-6	2
-5	2
-4	6
-3	1
28E1166-2	1

REQUIREMENTS PER AIRPLANE

D.H.	MODEL	NEXT ASSY.	REQ.
-570	28-5MC	28E5552	1
-55	28-5MA	28E5552	1
-550	28-5MN	28E5552	1
-580	28-5AMC	28E5552	1
-560	PBY-5A	28E4018-560	1
-55	28-5-ME	28E5552	1
-550	PBY-5	28E4018-550	1
-12	PBY-3	28E4018-31	1
-12	PBY-4	28E4018-40	1
-12	PBY-3	28E4018-30	1
-9	PBY-2	28E1018	1
-0	PBY-1	28E1018	1

C-70496, C-77713, C-86476 #1 THRU 52, C-70496, C-91876 #1 THRU 90
EFF # 0878-0907 INCL.
" ALL
EFF # 0842-0877 INCL.

REPLACES
REPLACED BY
LIMIT ON DIMENSIONS UNLESS OTHERWISE SPECIFIED ± 1/32
L.C.W. 5-6-37 APPROVED DATE
3.53 CALC. WT. ACT. WT.
SCALE 6" = 1'-0" & NOTED
A.C.
NAVY NOTED
MATERIAL NOTED | SPEC. NOTED | HEAT TREAT NOTED | FINISH NOTED
ADAMS 4-24-36 | THURBER 6-4-37 | MILLER
DRAFT | CHECK | EXAM. | ENG.
CONSOLIDATED AIRCRAFT CORP. BUFFALO, N.Y.
STAMP PT. NO. WHERE SHOWN
NAME: BOX DETAILS - ELEC. - MOTOR SWITCH
OPR. HAND
DWG. SIZE G 28E1166

R

28E1166

SUPPLIES & EQUIPMENT CLASSIFICATION

LET	ALTERATION	DATE	BY
AA	TRACED	10-7-41	[illegible]

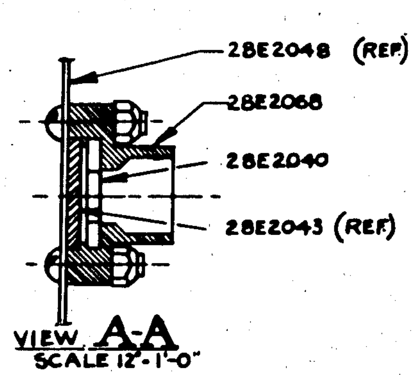

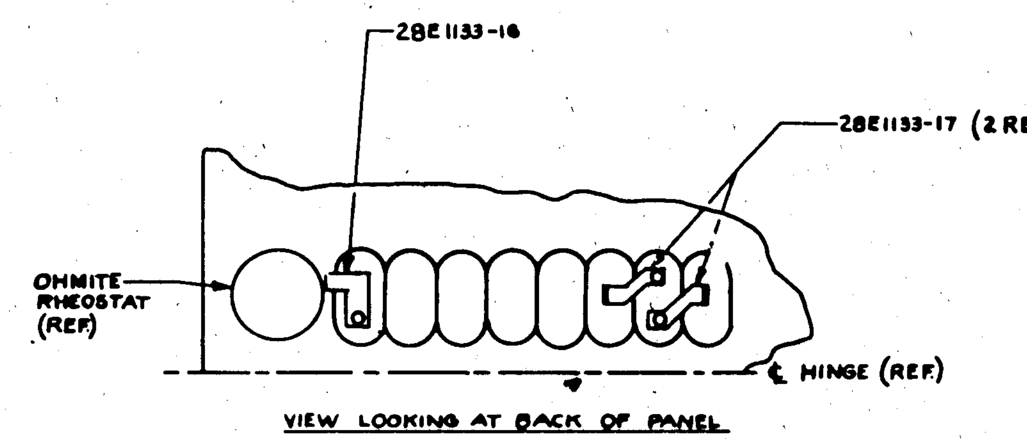

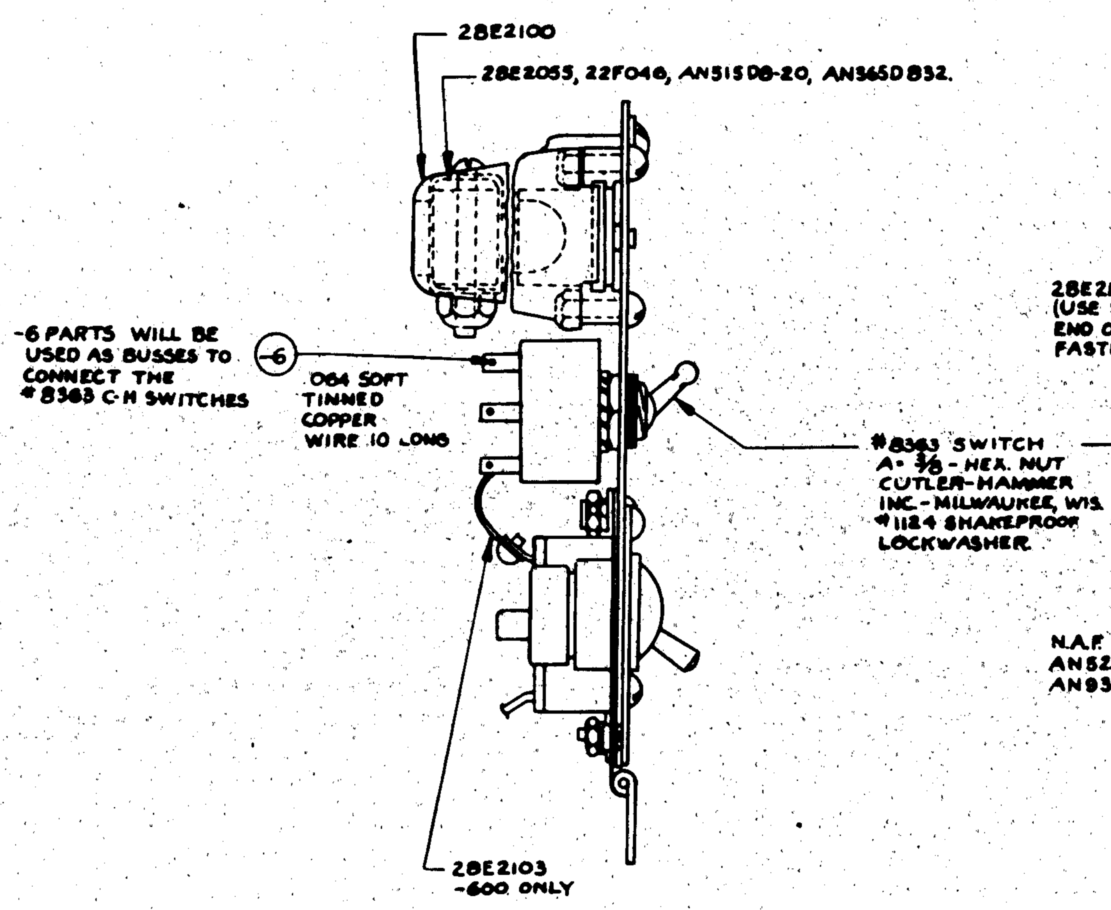

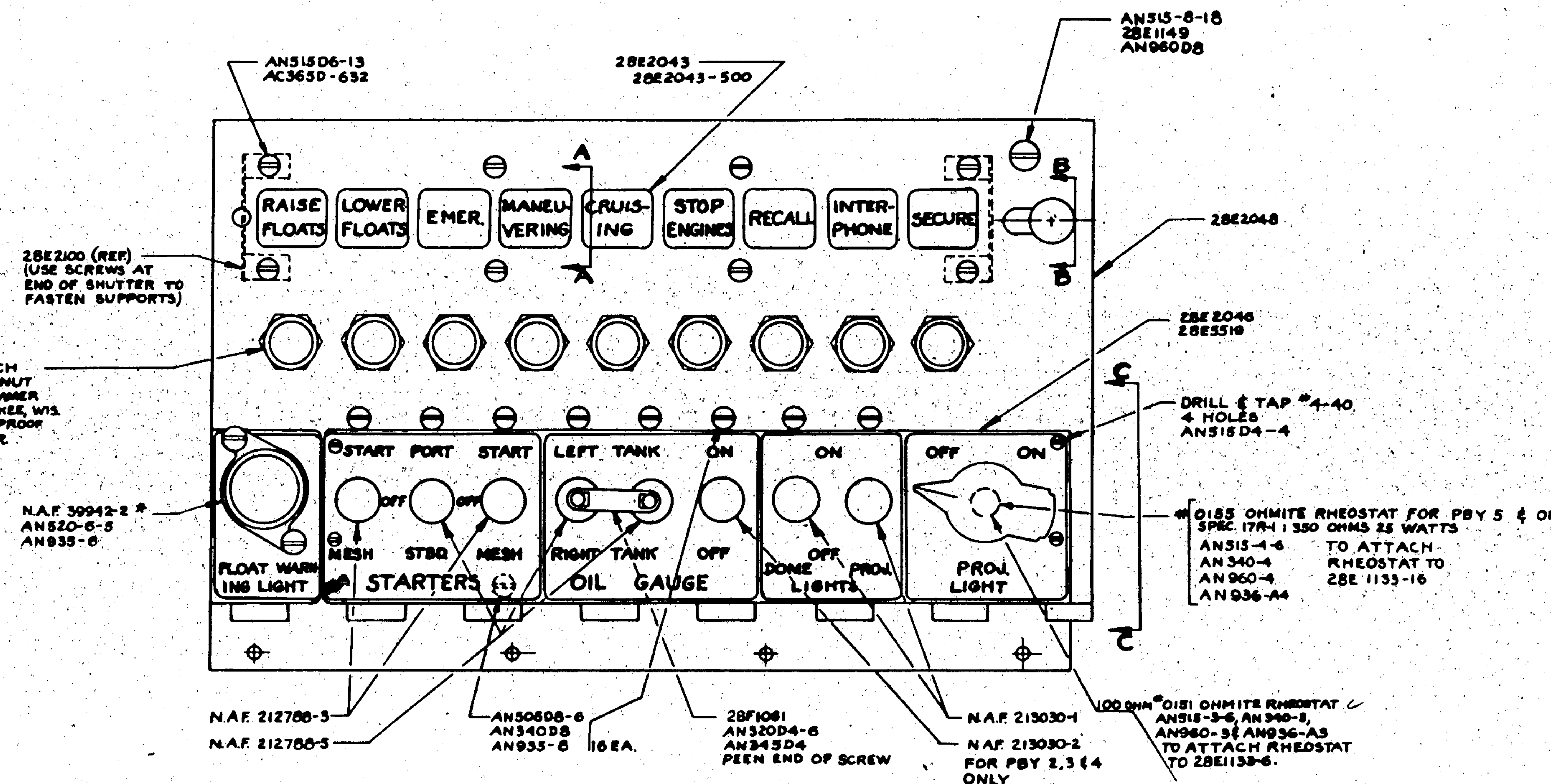

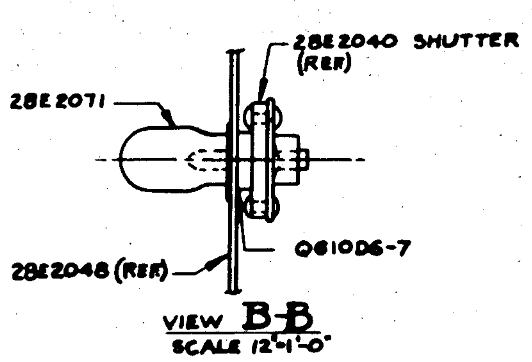

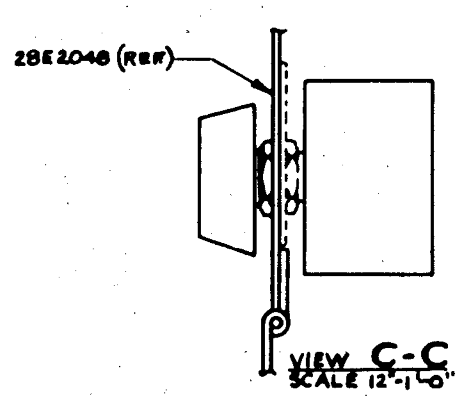

* C.-70496 ; C-77713,
C-88476 #1-#52

△ C. 70496
C-91876 # 1-#90

* DENOTES GOV'T. FURN. MAT'L.

FINISH NOTE :- TOUCH UP ALL EXPOSED METAL SURFACES, EXCEPT SWITCH HANDLES, TO MATCH SURROUNDING FINISH.

PART NO.	STOCK	MATERIAL	SPEC.	-0 LH REQ.	-0 RH REQ.	-400 LH REQ.	-400 RH REQ.	-600 LH REQ.	-600 RH REQ.	-700N LH REQ.	-700N RH REQ.	LH REQ.	RH REQ.
AN960D8				1		1							
*0151 OHMITE (NOTED)				1		1							
AN515-3-6										1			
AN340-3										2			
AN960-3										2			
AN936-A3										1			
AN515-4-6						1		1		1			
AN340-4						2		2		2			
AN936-A4						1		1		1			
AN960-4						2		2		2			
AC365D-632				8		8		8		8			
AN515-8-18				1		1		1		1			
AN515D6-13				8		8		8		8			
AN515D8-20				6		6		6		6			
AC365D832				6		6		6		6			
AN935-6				2		2		2		2			
AN520-6-5				2		2		2		2			
AN340D8				16		16		16		16			
AN505D8-6				16		16		16		16			
AN935-8				16		16		16		16			
AN515D4-4				4		4		4		4			
AN345D4				1		1		1		1			
AN520D4-6				1		1		1		1			
28E2103								1					
28E2046N										1			
28E2043-500N										1			
28E2049-6								3		3			
28E5519								1					
28E1133-16				1		1		1		1			
28E1133-17				2		2		2		2			
28E2043-500						1		1					
22F046				9		9		9		9			
28E1133-6								1		1			
Q610D6-7				1		1		1		1			
28F1061				1		1		1		1			
*NAF 39942-2				1		1		1		1			
NAF 213030-2				1		1		1		1			
N.A.F. 213030-1				2		2		2		2			
N.A.F. 212788-5				3		3		3		3			
N.A.F. 212788-3				2		2		2		2			
#8363 CUTLER-HAMMER				9		9		9		9			
#1124 SHAKEPROOF				9		9		9		9			
*0155 OHMITE (NOTED)						1		1		1			
28E1149				1		1		1		1			
28E2048				1		1		1		1			
28E2046				1		1							
28E2100				2		2		2		2			
28E2055				1		1		1		1			
28E2071				1		1		1		1			
28E2040				1		1		1		1			
28E2068				1		1		1		1			
28E2043				1									

PARTS LIST PER ASSY.

	ASSY. DASH NO.	MODEL	HEAT ASSY.	REQ.
	-400	28-5AMC	28F5558	
	-400	28-5MC	}	
	-600	28-5MA		
*	-400	PBY-5A	28F5005	
△	-400	PBY-5	28F5005	
	-700N	28-5MN	28F5556	
	-600	28-5ME	}	

REQUIREMENTS PER AIRPLANE

REPLACES 28E2049 12-28-36	KCW	2-23-38	
	APPROVED	DATE	
REPLACED BY	2.50 CALC. WT.	ACT. WT.	
LIMIT ON DIMENSIONS UNLESS OTHERWISE SPECIFIED ±	SCALE 12"=1'-0"		

A C				CORR. 10AN	MAR	M.W.H.	
NAVY NOTED	NOTED	NONE	NOTED	12-28-36			
MATERIAL	SPEC.	HEAT TREAT	FINISH	DRAFT	CHECK	EXAM.	ENG.

CONSOLIDATED AIRCRAFT CORP.
SAN DIEGO, CALIF.

NAME PANEL ASSEM.— ELEC.-MECH'S SWITCH

OPP. HAND

DWG. SIZE G 28E2049

NOTICE IS HEREBY GIVEN THAT THIS DRAWING IS PART OF THE PROPRIETARY ARTICLE, OWNED BY CONSOLIDATED AIRCRAFT CORPORATION, WHICH AS IS INDICATED ON THE DRAWING. THE UNITED STATES (OR OTHER CUSTOMER TO WHOM FURNISHED), BY ACCEPTING THIS DRAWING, ASSUMES CUSTODY THEREOF AND AGREES (A) THAT ALL INFORMATION SET FORTH IN THIS DRAWING WILL BE HELD CONFIDENTIAL AND WILL NOT BE DISCLOSED TO ANYONE OTHER THAN AN OFFICIAL OF THE UNITED STATES (OR OF SAID OTHER CUSTOMER). (B) THAT THIS DRAWING WILL BE USED FOR MAINTENANCE PURPOSES ONLY AND UNDER NO CIRCUMSTANCES FOR THE MANUFACTURE OR REPRODUCTION IN QUANTITY OF THE ARTICLE OR PART DISCLOSED THEREBY. PARTS MANUFACTURED TO THIS DRAWING MAY BE PROCURED FROM CONSOLIDATED AIRCRAFT CORPORATION, SAN DIEGO. ACCURACY OF THIS DRAWING NOT GUARANTEED.

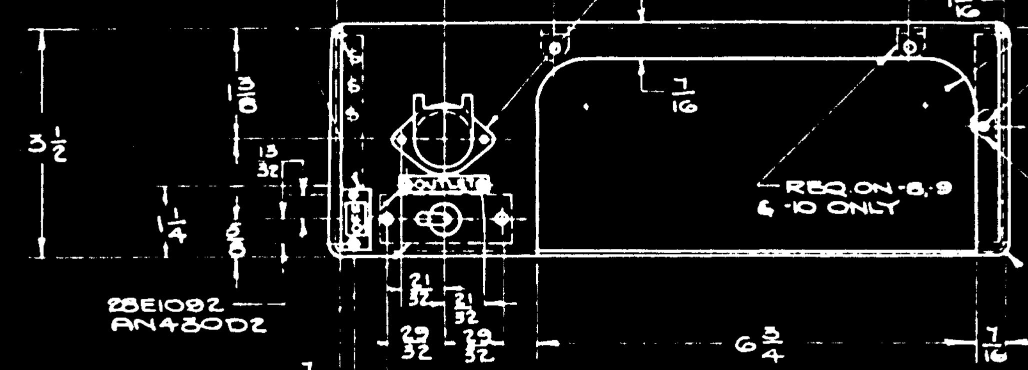

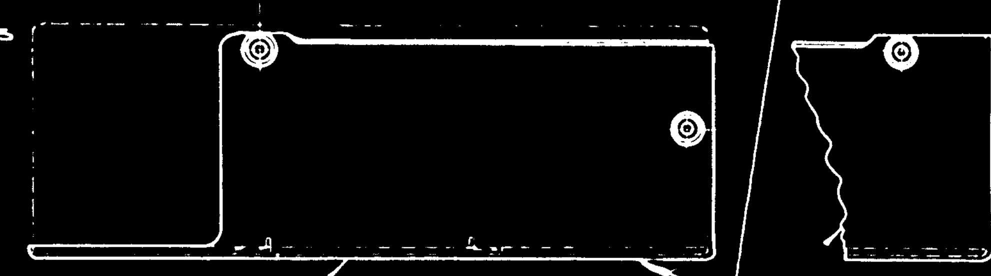

(2) (8) (9) BOX L.H. SHOWN

(3) (15) (10) BOX R.H. OPPOSITE

.040 AL. ALLOY SHEET 52S0 SPEC. M209 TYPE II TEMPER A SEE NOTES

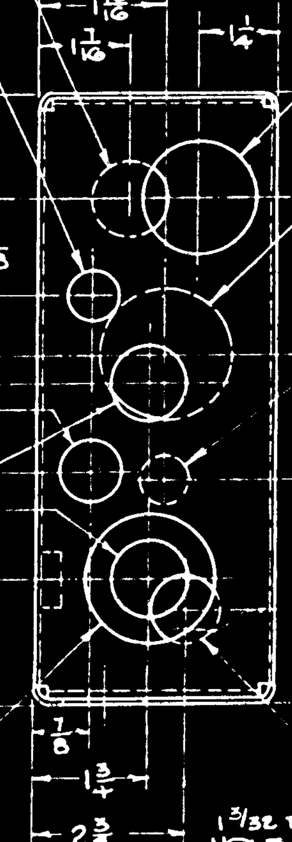

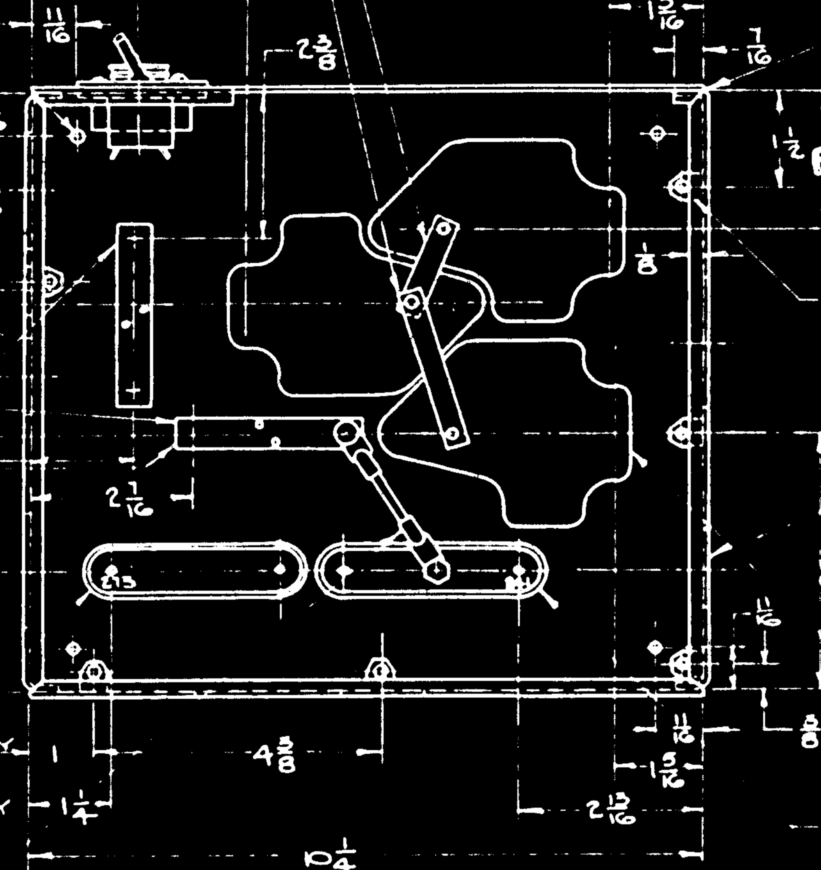

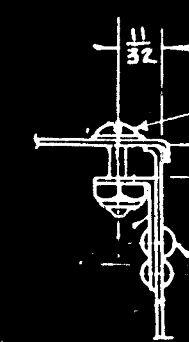

TYPICAL COVER ATTACHMENT

SCALE: 12"=1'0"

NOTE: REMOVE # 2 PIN ON NAF 310191-1 & -2 RECEPTACLES

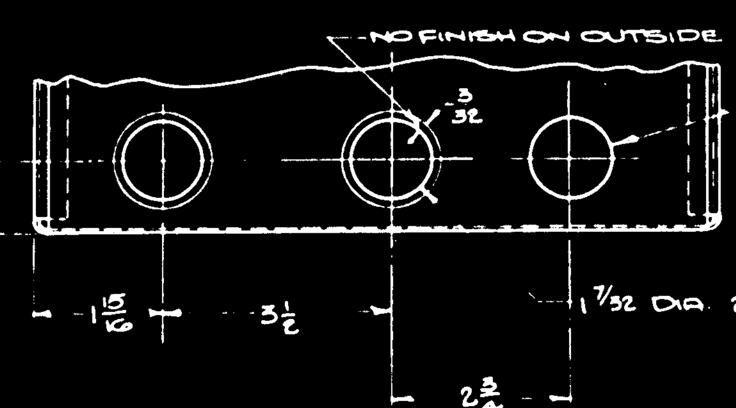

NOTES

FINISH BEFORE ADDING SCREWS & STOPNUTS Z-P-28AY
DO NOT FINISH HOLES ON OUTSIDE FOR 3/32 RADIAL DISTANCE

SPOTWELD SEAMS
ALL BENDS 1/16 R

-2, -3, -8, -9, -10 & -15 BOXES MAY BE MADE ON 28E1091-2 & -3 FORMS

-4 WIRE ASSY IS IDENTICAL TO 28E1091-7

LET	ALTERATION
R	TRACED
S	NOTE ADDED
T	REMOVED 22F211-2, 28E1149, ADDED NAF 214067 & NOTE
U	REMOVED -4 FROM REQ/PLANE N.A. 28E4047 (2) FOR PBY-5 & PBY-5A & 28-5S. WT. CHG. NEG. 8-16-43

E.O. 34889
E.O. 34890
PBY-5 PBY-5A

SUPPLIES & EQUIPMENT CLASSIFICATION

NEXT ASSY	ASSY	SHIPS
28E2014-155 & 156	-6 & -13	#0490 TO #0496 INCL.
28E2014-157 & 158	-11 & -12	#0454 TO #0465 INCL. #0497 #0498
28E2014-0 & -1	28E2010-0, -1	#0466 TO #0489 INCL. #0499 ON

	-0	-1	-6	-11	-12	-15
Q3106D832	8	8	7	8	8	8
NAF 214067-1	8	8	7	8	8	8
NAF 310191-2 (PBY-2 #0455 & ON)	1	1		1	1	1
NAF 310191-1 (PBY-2 #0454 ONLY)			1			
NAF 213030-1	1	1	1	1	1	1
NAF 213010-4-35	1	1	1	2	2	1
NAF 39967	3	3	3	3	3	3
NAF 29010-1	2	2	2	2	2	2
AN960D10	6	6	6	6	6	6
AN960D8	8	8	7	8	8	8
AN935-10	6	6	6	6	6	6
AN935-8	2	2	2	2	2	2
AN520D10-10	6	6	6	6	6	6
AN520D6-5	2	2	2	4	4	2
AN515D8-5	6	6	6	6	6	6
AN442AD3	16	16	14	16	16	16
AN430D2	4	4	4	4	4	4
AN345D10	6	6	6	6	6	6
AN340D8	2	2	2	2	2	2
28E1193-5		1			1	1
-4		1			1	1
-3	1		1	1		
28E1193-2	1		1	1		
28E1114	1	1	1	2	2	1
28E1093						
28E1092						
28E1091-13						
-12						
-8						
-5						
28E1091-4						
28E1079-3						
-2						
-1						
28E1079						
28E1063						
28E2010-15						
-10						
-9						
-8						
-4						
-3						
-2						

ASS'Y	A	B	C
28E2010-15	3 1/16	1 5/8	5 3/8
-10	3 13/16	1 13/16	5 9/16
-9	3 5/16	2 3/16	5 3/8
-8	3 5/16	2 3/16	5 3/8
-3	3 1/16	1 5/8	5 3/8
28E2010-2	3 5/16	2 3/16	5 3/8

O.H.	MODEL	NEXT ASSY	REQ
-13	PBY-2	28E2014-156	
-12	PBY-2	-157	
-11	PBY-2	-158	
-6	PBY-2	-155	
-1	PBY-2	-1	
-0	PBY-2	28E2014	

REQUIREMENTS PER AIRPLANE — PARTS LIST PER ASSY: -0, -1, -6, -11, -12, -15

FINISH CODE: Z ANODIC TREATMENT; P P-27 PRIMER; AP ALUMINIZED PRIMER; C CADMIUM PLATE

REPLACES — REPLACED BY — APPROVED: [signature] 3-1-38 DATE — CALC. WT. 4.81 — ACT. WT. — LIMIT IN DIMENSIONS UNLESS OTHERWISE SPECIFIED 1/32 — SCALE 6"=1'0" & NOTED

NAVY: NOTED MATERIAL — NOTED SPEC — NONE HEAT TREAT — NOTED FINISH

DRAFT: McCabe 2-10-36 — CHECK: H.R.C. — EXAM: Miller 2

ENG. FILE

COPY No. 2

CONSOLIDATED AIRCRAFT CORP. SAN DIEGO, CALIF.

NAME: BOX ASSY - ELEC. - ENG. TERM. JUNCTION

OPP. HAND 28E2010-1

SIZE G — DWG 28E2010

LET	ALTERATION	DATE	BY	LET	ALTERATION	DATE	BY
Y	REVISED & REDRAWN, ON -5 ADDED 3/4 x 1 1/4 CUTOUT AT 23/32 HOLE CHG'D FROM "THIS END" TO "OPP END"	9-17-41	WIGGINS	AD	REMOVED -11 FROM -56ASSY & ADD. -18(1) TO -56ASSY IN TAB BLOCK ADD. -18 & 3 3/16 DIM ADD NOTE "7/16 DIM FOR -18 ONLY (WT CHG NEG)	3-2-42	
Z	CREATED -59 ASS'Y FOR 28-5ME & -56 ASS'Y FOR 28-5AMN. ON FC OF DRG & B/M REMOVED Q3106-D832(1) & AN442-D3(2), ADDED AN931-8-13(2). ON TABULATION -"C" DIMENS -15 CHANGED FROM 3 TO 3 1/2 & -2 CHANGED FROM 3 1/2 TO 3. ON SIDE VIEW 3 1/2 DIM WAS 3 1/4. DIM FOR BOTTOM WAS 7/16. ON FRONT VIEW 3/4 HOLES CALLED OUT FOR -10 & -15 WERE 31/32. REMOVED 3/4 x 1 1/4 CUTOUT ON -5 PART. 31/32 HOLE IN SIDE VIEW CALLED OUT FOR -11 & -14	11-8-41	MILLS	AE	CREATED -60 ASSY (NO WT CHG)		
				AF	ADD CUTOUT ON -5. DIMS 1 1/2 & 1/16 (WT CHG NEG)		
				AG	-19 REPLACES -9 ON -60 ASSY. SAME AS -9 EXCEPT ADDED 25/32 DIA. HOLE & OMITED 31/32 DIA. HOLE ALSO CREATED -65 ASSY (WT CHG NEG)		
AA	CREATED -16 BOX, CHG'D -10 BOX TO -16 FOR -50 ASSY.	10/3/41	MAHAN	AH	REM. -56 ASSY	3-31-42	
AB	CREATED -50 ASSY. FOR SHIPS [illegible] CONTR #70496 CHG'D "AA" CHG.	11/11/41	MAHAN	AJ	ADDED -19 FOR 23/32 DIA HOLE IN TABULATION BOX & FOR -19 AND 2 1/2. NO WT CHG.	6-3-42	EASTMAN
AC	ADDED ± 1/16 TOLERANCE TO 1/4 DIM REMOVED ALL PRESENT SPOTWELD SPECIFICATIONS & ADDED NOTE 3	12/5/41	CLARK	AK	REMOVED Q3106-D832 FROM B/M NO. WT. CHG.	6-3-42	EASTMAN

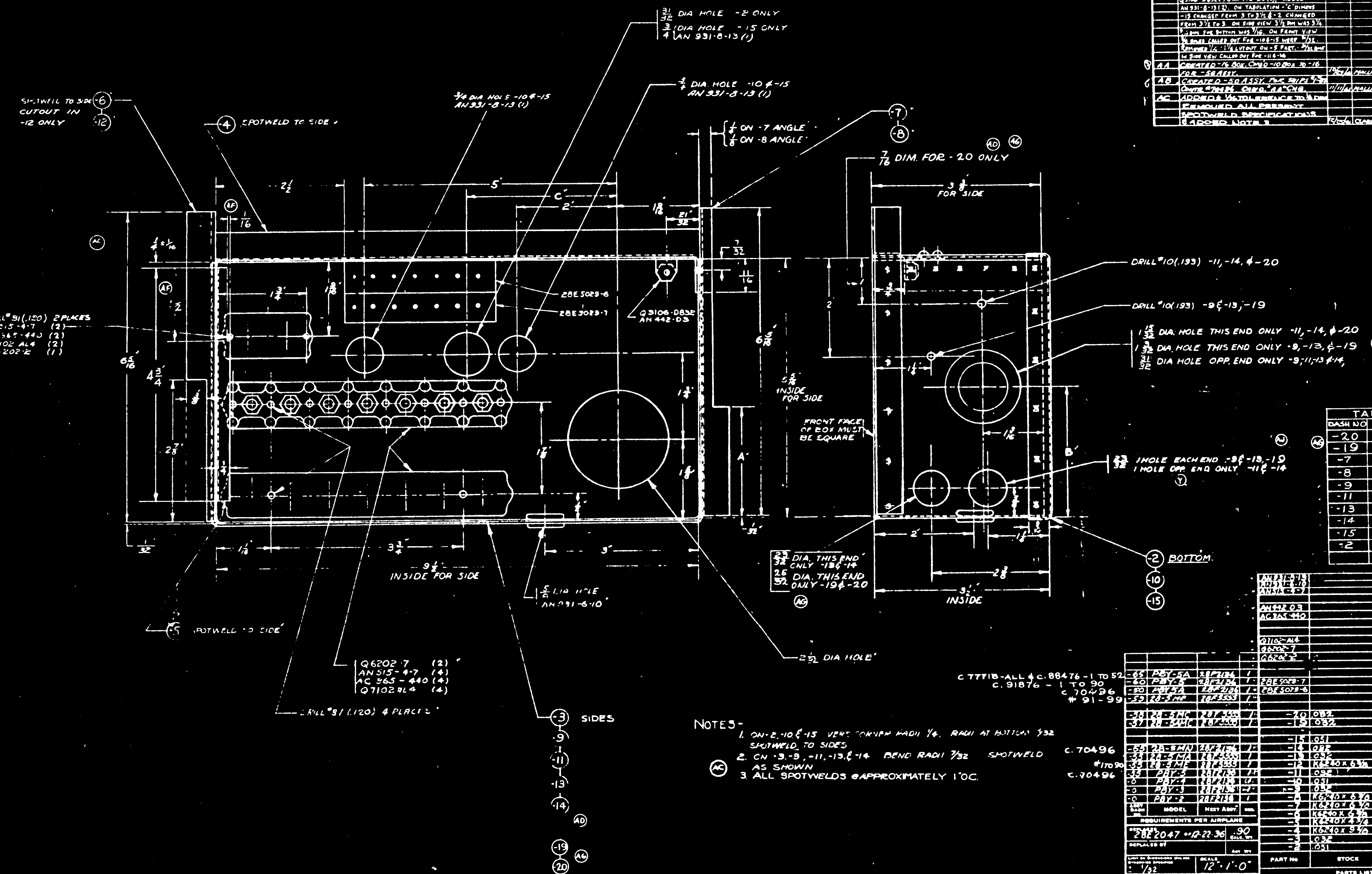

TABULATION			
DASH NO	A	B	C
-20	—	3 3/16	—
-19	—	4	—
-7	3 1/4	—	—
-8	2 5/16	—	—
-9	—	2 1/2	—
-11	—	2 11/16	—
-13	—	2 1/2	—
-14	—	2 11/16	—
-15	—	—	3 1/2
-2	—	—	3

NOTES-

1. ON -2, -10 & -15 VERT CORNER RADII 1/4. RADII AT BOTTOM 3/32 SPOTWELD TO SIDES
2. ON -3, -9, -11, -13 & -14 BEND RADII 7/32 SPOTWELD AS SHOWN
3. ALL SPOTWELDS @ APPROXIMATELY 1" O.C.

C 77718-ALL & C. 88476 - 1 TO 52
C. 91876 - 1 TO 90
C 70496
91-99

C. 70496
#1 TO 90
C. 70496

ASSY DASH NO.	MODEL	NEXT ASSY.	REQ.
-65	PBY-5A	28F2136	1
-60	PBY-5	28F2136	1
-50	PBY-5A	28F2136	1
-59	28-5ME	28F3533	1
-58	28-5MC	28F3533	1
-57	28-5AMC	28F3533	1
-55	28-5MN	28F2136	1
-55	28-5MA	28F3533	1
-55	28-5ME	28F3533	1
-55	PBY-5	28F2136	1
-0	PBY-4	28F2136	1
-0	PBY-3	28F2136	1
-0	PBY-2	28F2136	1

REQUIREMENTS PER AIRPLANE

REPLACES 28E2047 - 12-22-36 | .90 CALC. WT.

REPLACED BY | ACT. WT.

LIMIT ON DIMENSIONS UNLESS OTHERWISE SPECIFIED ± 1/32 | SCALE 12" = 1'-0"

STAMP PART NUMBER WHERE SHOWN

PART No	STOCK	MATERIAL	SPEC	-0 LH	RH	-55 LH	-50 RH	LH	-60 RH	-57 LH	-65 RH	-58 LH	-59 LH
AN931-8-13						2	2		2	3	2	3	2
AN931-6-10				1		1	7		1	1	1	1	1
AN515-4-7						4	4		4	6	4	6	4
AN442-D3													
AC365-440						4	4		4	6	4	6	4
Q7102-AL4						4	4		4	4	4	6	4
Q6202-7						2	2		2	2	2	2	2
Q6202-2										1		1	
28E5029-7						1	1		1	1	1	1	1
28E5029-6						1	1		1	1	1	1	1
-20	.032	ALCLAD 24ST	47AB COND T								1		
-19	.032	ALCLAD 24ST	47AB COND T						1				
-15	.051	ALCLAD 24SO	47AB COND A							1		1	
-14	.032	ALCLAD 24ST	47AB COND T							1			
-13	.032	ALCLAD 24ST	47AB COND T									1	1
-12	K6240 x 6 3/8	DURAL 53ST	46A10 COND T						1	1	1		
-11	.032	ALCLAD 24ST	47AB COND T				1						
-10	.051	ALCLAD 24SO	47AB COND A			1	1		1		1		1
-9	.032	ALCLAD 24ST	47AB COND T			1							1
-8	K6210 x 6 3/8	DURAL 53ST	46A10 COND T			1	1		1	1	1	1	1
-7	K6210 x 6 3/8	DURAL 53ST	46A10 COND T	1									
-6	K6240 x 6 3/8	DURAL 53ST	46A10 COND T	1		1	1					1	
-5	K6240 x 4 3/4	DURAL 53ST	46A10 COND T	1		1	1		1	1	1	1	1
-4	K6240 x 9 3/8	DURAL 53ST	46A10 COND T	1		1	1		1	1	1	1	1
-3	.032	ALCLAD 24ST	47AB COND T	1									
-2	.051	ALCLAD 24SO	47AB COND A	1									

PARTS LIST PER ASSY.

A C							
NAVY SR53	NONE	12-22-36	9-19-41				
HEAT TREAT	FINISH	DRAFT	CHECK	STRUCT	MAT	APPROV	ENG

NAME BOX ASSY.—E. —MECH'S SWITCH PANEL

CONSOLIDATED AIRCRAFT CORP. SAN DIEGO, CALIF

OPP HAND

DWG SIZE G | 28E2047

SHOP RELEASE 6/19/41

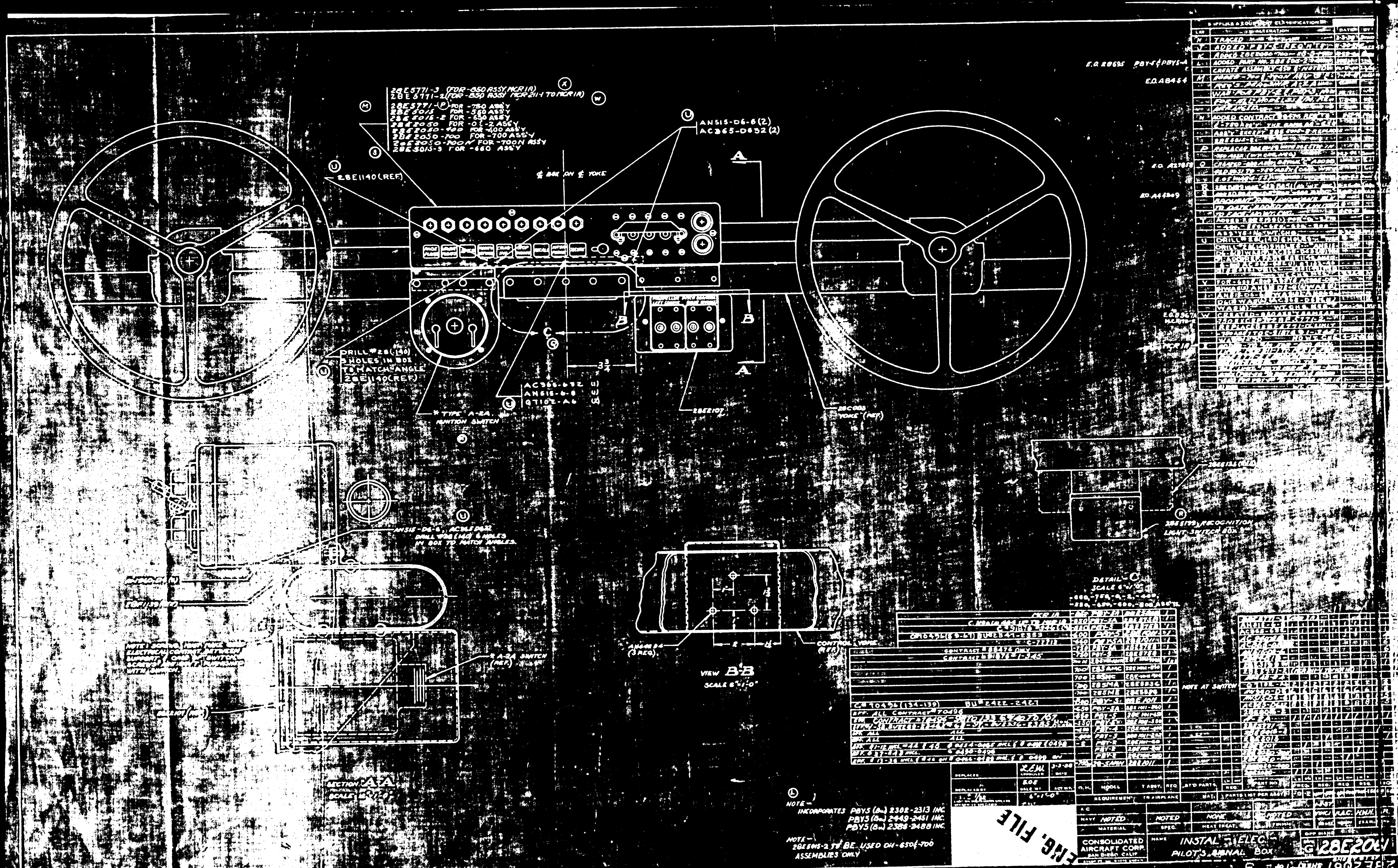

28E5771-3 (FOR-850 ASSY MCR1A)
28E5771-2 (FOR-850 ASSY MCR211-1 TO MCR1A)
28E5771-P FOR -750 ASSY
28E5015 FOR -550 ASSY
28E5015-2 FOR -650 ASSY
28E2050 FOR -01-2 ASSY
28E2050-400 FOR -400 ASSY
28E2050-700 FOR -700 ASSY
28E2050-700N FOR -700N ASSY
28E5015-3 FOR -660 ASSY
28E1140 (REF)
℄ BOX ON ℄ YOKE
AN515-D6-6 (2)
AC365-D632 (2)
A
A
B
B
C
DRILL #28 (.140)
3 HOLES IN BOX
TO MATCH ANGLE
28E1140 (REF)
* TYPE A-2A.
IGNITION SWITCH
AC365-632 (1)
AN515-6-8 (1)
Q7102-A6 (2)
28E2107
28C008
YOKE (REF)
E.O. 28695 PBY-5 & PBY5-A
E.O. A8454
E.O. A27858
E.O. A44309
E.O. B967A
MCR1A
AN515-D6-6, AC365D632
DRILL #28 (.140) 6 HOLES
IN BOX TO MATCH ANGLES.
* A-2A SWITCH
(REF.)
28E2107
SECTION A-A
SCALE
AN442 D4
(3 REQ).
CONTROL YOKE
(REF)
VIEW B-B
SCALE 6"=1'-0"
28E5125 (REF)
28E5199 RECOGNITION
LIGHT SWITCH BOX
DETAIL-C
SCALE 6"=1'-0"
-660, -750, -0, -2, -400,
-550, -650, -600, -800 ASS'YS.
NOTE AT SWITCH
C#70496 (134-139) BU#2422-2427
EFF. ALL CONTRACT #70496
NOTE —
INCORPORATES PBY5 (Bu) 2302-2313 INC.
PBY5 (Bu) 2449-2451 INC.
PBY5 (Bu) 2386-2488 INC.
NOTE —
28E5015-2 TO BE USED ON -650 & -700
ASSEMBLIES ONLY
REPLACES
REPLACED BY
6"=1'-0"
REQUIREMENT TO AIRPLANE
NAVY NOTED
MATERIAL
NOTED
SPEC.
NONE
HEAT TREAT
NOTED
FINISH
CONSOLIDATED
AIRCRAFT CORP.
SAN DIEGO, CALIF.
NAME INSTAL - ELEC. -
PILOT'S SIGNAL BOX
G 28E2061
ENG. FILE

LET	ALTERATION	DATE	BY
C	TRACED	4-22-42	
D	ADDED NOTES "SCREWS..... ...SWITCH "DRILL"#28...28E1139 (REF), (AC365-6832), AN515-6-8(1), QTIO2-A6(2) DEL "PARTS REQ'D 28E1139 (28E1140, AC365-D632(3) WAS(3), AN515-D6-6(3) WAS(3), AC940-A8(3) WAS(3), AN960-D6(3) WAS(3), AC365-D632(3) WAS(3), AN515-D6-6(3) WAS(3). WT CHG NEG.	2-24-43	HOE

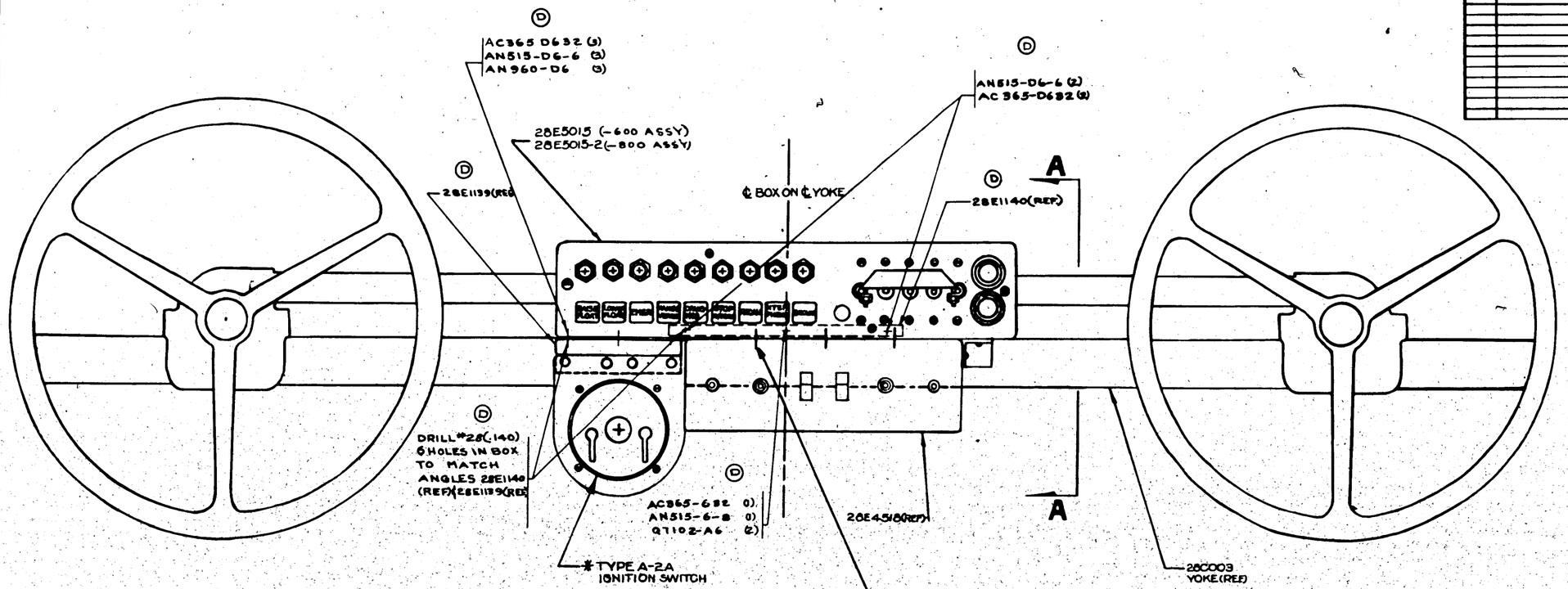

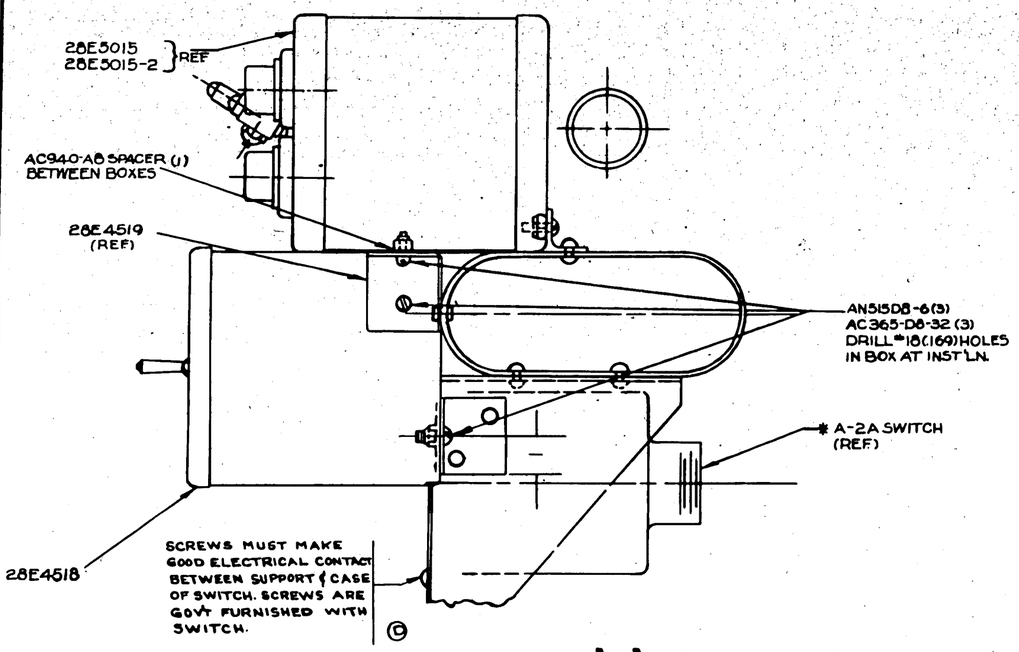

SECTION A-A
SCALE 12" = 1'-0"

ASSY DASH NO	MODEL	NEXT ASSY	QTY
REQUIREMENTS PER AIRPLANE			
REPLACED		ENG. RLY	
REPLACED BY		ACT. QTY	

LIMIT OF DIMENSIONS UNLESS OTHERWISE SPECIFIED ± 1/64
SCALE 3/4" = 1'-0" NOTED
STAMP PART NUMBER WHERE SHOWN

PART NO	STOCK	MATERIAL	SPEC	LH REQ	RH REQ	LH REQ	RH REQ	LH REQ	RH REQ	LH REQ	RH REQ
PARTS LIST PER ASSY.				-600	-800	-3	-4				

A.C.
NAVY NONE — HEAT TREAT
NOTED — FINISH
4-22-42 — DRAFT

CHECK	STRUCT	MAT	SPECIAL	ENG

NAME INSTALLATION - ELECTRIC - PILOT'S SIGNAL BOX
CONSOLIDATED AIRCRAFT CORP. San Diego, Calif.

OPP HAND
DWG G
DWG 28E2061
SHEET 2 OF 2 SHEETS

R

LET	ALTERATION	DATE	BY
AX (CONT.)	RESTRICTED -36 ASS'Y. FOR PBY-5A W/A 28E5758 (1) TO C-NOa(B)464, MCR#254-5 TO MCR#1A.	8/21/43	STEINSTRA

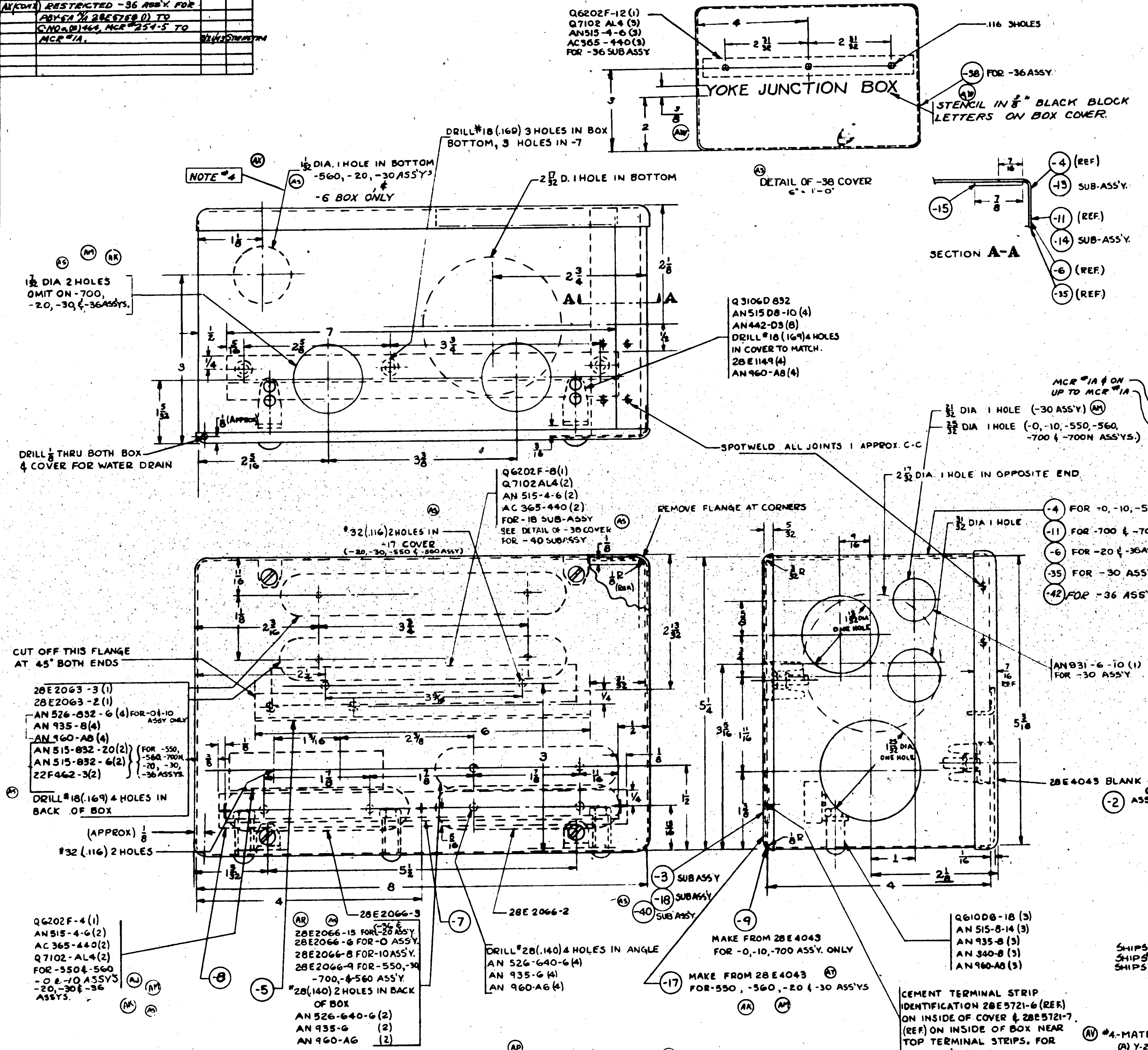

NOTE #4
-42 BOX SAME AS -6 BOX EXCEPT AS SHOWN.

FINISH CODE-
GP- GREEN PRIME
P- P27 PRIMER

FINISH: INSIDE & OUTSIDE P-26P
LEAVE OUTSIDE UNFINISHED WITHIN 3/32 OF CONDUIT HOLES

NOTE #1.
APPLY 28E5784-6 & 28E5784-7 TO INSIDE OF COVER 28E2062-18. IF BLUE PRINT CUT OUT IS USED, APPLY WITH, AND COVER OVER WITH SHELLAC.

NOTE #2.
SHELLAC 28E5382-6 & -7 TO INSIDE OF BOX COVER AND COVER WITH SHELLAC FOR -20 ASS'Y & -30 ASS'Y

NOTE #3
SHELLAC 28E5382-8&9 TO INSIDE OF BOX COVER AND COVER WITH SHELLAC FOR -36 ASSY

#4-MATERIAL FOR -7 MAY BE-
(A) Y-2-A7T X 7 1/8, OR
(B) K78P X 7 1/8, AL.AL. 53ST, SPEC QQ-A-331-T.

	LET	ALTERATION	DATE	BY
	AF	TRACED	4-16-42	
E.O.A32288	AG	CREATED -18 SUB-ASS'Y REPLACING -3 SUB-ASS'Y IN -550 & -560 ASSYS.; NEG. WT. CHANGE	4-16-42	
E.O.A34719	AH	ADDED 28E5784-6 & -7. WT. CHG. NEG.	6-3-42	
	AJ	Q6202F-4(1), AN515-4-8(2), AC365-440(2), Q7102-AL4(2) TO -0 & -10 ASSYS WT. CHG. NEG.	8/28/42	COLLINS
E.O.A62112A} MCR. 101-3	AK	CREATED -20 ASS'Y. NO WT. CHG.	2-10-43	BRIGGLEY
E.O.A90117} MCR. 89-18	AL	IN -20 ASS'Y, 28E5382-6 & -7 (1) EA. REQ. WAS 28E5784-6 & -7 (1) EA. REQ. ADDED NOTE #2. WT. CHG. NEG.	2-10-43	BRIGGLEY
E.O.A91088A} MCR. 124-3	AM	CREATED -30 ASS'Y. WT. CHG. NEG.	2-10-43	BRIGGLEY
	AN	IN -25 SUB ASS'Y, -35 WAS -8. NO WT. CHG.	2-10-43	BRIGGLEY
E.O.A98223	AP	NOTE #1 WAS "SHELLAC---SHELLAC" WT. CHG. NEG.	2-10-43	BRIGGLEY
	AQ	IN NOTE #1, 28E2062-18 WAS 28E2062-3. NO WT. CHG.	2-10-43	BRIGGLEY
E.O.A99138	AR	IN -20 ASS'Y, 28E2066-15 (1) WAS 28E2066-9 (1). NO WT. CHG.	2-10-43	BRIGGLEY
MCR-254-5	AS	CREATED -36 ASSY. SAME AS -20 ASSY EXCEPT 28E5382...		

LET	ALTERATION	DATE	BY
	[illegible] -18 SUB ASS'Y. REPLACED -3 SUB ASS'Y ... -40 SUB ASSY ... 28E5758 ... WT. CHG. +.043 (NEG.).	5-18	
AT	28E4043 WAS 33E4043. NO WT. CHG.	5-18	
AU	ON -30 ASSY 28E5382-8 WAS 28E5382-7. NO WT. CHG.	5-21-43	
AV	IN B/M, FOR -7, REPLACED "K78PX7 1/8 AL. AL. 53ST, 46A10-T" WITH "NOTED." ADDED NOTE #4. WT. CHG. NEG.	7-23-43	
AW	ADDED STENCIL, NOTE & DIMS: 3/8 & 2 TO DETAIL OF -38 COVER. NO WT. CHG.	(MCR #308) 8/11/43	
AX	ADDED -42 FOR -19 SUB ASS'Y ADDED TO FACE OF DWG. NOTE #4, IN B/M RESTRICTED -6 IN -19 SUB ASS'Y UP TO MCR #1A, & -42 TO MCR #1A & ON, IN REQ. PER AIRPLANE BLOCK ADDED -36 ASS'Y. FOR PBY-5A W/A 28E5868 (1), & RESTRICTED TO C-NOa(B)464	(MCR #1A)	
(AX CONT.)	MCR #1A & ON, WT. CHG. NEG.	8/21/43	STEINSTRA

Q7102-AL4				2
Q6202F-12				1
AC365-440				2
AN515-4-6				2
AN930-A2				3
-38	MAKE FROM 28E4043			1
-8	1/32 × 5/8 × 7 3/8	MICARTA	17P5	1
-40	SUB ASSY			
-15	.032 × 1 × 4	ALC. SHT.	QQ-A-362-T	1
-35	.032 × 4 1/4 × 27	ALC. SHT.	QQ-A-362-T	1
-25	SUB ASS'Y			
-42	.032 × 4 1/4 × 27	ALC SHT	QQ-A-362-T	1
-15	.032 × 1 × 4	ALC. SHT.	QQ-A-362-T	1
-6	.032 × 4 1/4 × 27	ALC. SHT.	QQ-A-362-T	1
-19	SUB ASS'Y			

Q7102-AL4				2
Q6202F8				1
AC365-440				2
AN515-4-6				2
AN430-A2				3
-17	MAKE FROM 28E4043			1
-8	1/32X5/8X7 3/8	MICARTA	17P5	1
-18	SUB-ASS'Y			
-15	.032X1X4	ALC. SHT.	QQ-A-362-T	1
-11	.032X4 1/4X27	ALC. SHT.	QQ-A-362-T	1
-14	SUB-ASS'Y			
-15	.032X1X4	ALC. SHT.	QQ-A-362-T	1
-4	.032X4 1/4X27	ALC. SHT.	QQ-A-362-T	1
-13	SUB ASS'Y			
AN430-A2				3
-9	MAKE FROM 28E4043			1
-8	1/32X5/8X7 3/8	MICARTA	17P5	1
-3	SUB-ASS'Y			
28E4043				1
-5	K78PX4 1/8	AL. AL. 53ST	46A10-T	1
-2	SUB-ASS'Y			

PART No	STOCK	MATERIAL	SPEC	-0 LH	-20 RH	-10 LH	-30 LH	-60 LH	-36 LH	-700 LH	RH	LH	LH
-40	SUB ASSY								1				
AC365-440				2	2	2	2	2	2			2	
28E5382-9									1				
AN960A8				11	11	11	11	11	11	11		11	11
AN960A6				6	6	6	6	6	6	6		6	6
AN935-8				7	7	7	7	7	7	7		7	7
AN935-6				6	6	6	6	6	6	6		6	6
28E2066-15					1				1				
28E5382-7					1								
28E5382-6					1		1						
AN931-6-10							1						
AN526-832-6				4		4							
AN526-640-6				6	6	6	6	6	6	6		6	6
AN515D8-10				4	4	4	4	4	4	4		4	4
AN515-832-20					2		2	2	2			2	2
AN515-832-6					2		2	2	2			2	2
AN515-8-14				3	3	3	3	3	3	3		3	3
28E5382-8							1						
AN515-4-6				2	2	2	2	2	2			2	
AN442-D3													
AN340-8				3	3	3	3	3	3	3		3	3
Q7102AL4				2	2	2	2	2	2			2	
Q6202F-4				1	1	1	1	1	1			1	
Q3106-D832				4	4	4	4	4	4	4		4	4
Q610-D6-18				3	3	3	3	3	3	3		3	3
28E5784-6												1	
28E5784-7												1	
28E2063-3				1	1	1	1	1	1	1		1	1
28E2063-2				1	1	1	1	1	1	1		1	1
28E2066-9							1	1		1		1	1
-8						1							
-6				1									
-3				1	1	1	1	1	1	1		1	1
28E2066-2				1	1	1	1	1	1	1		1	1
28E5721-7										1			1
28E5721-6										1			1
28E1149				4	4	4	4	4	4	4		4	4
22F462-3					2		2	2	2			2	2
-19	SUB ASS'Y				1				1				
-18	SUB ASS'Y				1		1	1				1	
-14	SUB ASS'Y									1			1
-13	SUB ASS'Y			1		1		1				1	
-7	NOTED	NOTED	NOTED	1	1	1	1	1	1	1		1	1
-25	SUB ASS'Y						1						
-3	SUB ASS'Y			1		1				1			1
28E2062-2	SUB ASS'Y			1	1	1	1	1		1		1	1

PARTS LIST PER ASSY.

ASSY DASH No	MODEL	NEXT ASSY	REQ.
-36	PBY-5A	28E5868	1
-36	PBY5A	28E5758	1
-20	PBY-5A	28E5758	1
-30	PBY-5	28E5758	1
-20	PBY-5	28E5758	1
-560	PBY5A	28E5758	1
-700	28-5MC	28E1011	1
-700N	28MN, MM	28E1011	1
-700	28-5MC	28E1011	1
-700	28-5MA	28E5536	1
-560	PBY-5	28E5758	1
-700	28-5ME	28E5536	1
-550	PBY-5A	28E1011	1
-550	PBY-5	28E1011-550	1
-10	PBY-4	28E1011-400	1
-0	PBY-3	28E1011-202	1
-10	PBY-2	28E1011-201	1
-0	PBY-2	28E1011-200	1
-0	PBY-2	28E1011-60	1

REQUIREMENTS PER AIRPLANE

CONT. #91876
CONT. #77138 70496
CONT. - 70496

SHIPS #0490-#0496 INCL.
SHIPS #0466-#0489, 0499-#0503 INCL.
SHIPS #0454-#0465, #0497-#0498 INCL.

REPLACES 28E2062 OF 5-28-37	1.543 CALC WT
REPLACED BY	ACT WT
LIMIT ON DIMENSIONS UNLESS OTHERWISE SPECIFIED 1/32	SCALE 12"=1'-0"

STAMP PART NUMBER WHERE SHOWN

A C		5-28-37	5-28-37				
NAVY NOTED	NOTED	PHILLIPS	McCABE			MOFFATT	R
HEAT TREAT	FINISH	DRAFT	CHECK	STRUCT	MAT	APPD	ENG

OPP HAND

NAME BOX ASS'Y-ELEC-RECEPTACLE

DWG SIZE G 28E2062

CONSOLIDATED AIRCRAFT CORP. SAN DIEGO, CALIF.

28E2062

LET	ALTERATION	DATE	BY	LET	ALTERATION	DATE	BY
	AN340-10, AN935-10 & AC365-1032 WT. CHG NEG.			P	REDRAWN — CREATED -22 -20 ASSYS WT. CHG. NEG.		
				Q	REVISED REQ/AIRPLANE. ADDED 28E5354 & NOTE 4 WT. CHG NEG		
				R	REMOVED 28E1063 FROM -2N -3N -3, -4, -5 & -20 ASSYS NO WT. CHG		
				S	IN -5 & -20 ASSYS -22 COVER REPLACES -7 COVER WT. CHG. NEG.		
				T	AT DETAIL "A" 1 1/16 DIA. HOLE WAS 1/8 DIA. WT. CHG. NEG.		
				U	REMOVED -8 BOX FROM -2 ASSY. NO WT. CHG.		
				V	28E5663 NEXT ASSY FOR -20 WAS 28E1013 NO WT. CHG.		
				W	-4 ASSY. C91876 1T030 REPLACED BY -5 C91876 WT. CHG NEG.		
				X	ON FACE OF DWG. DETAIL "A" 1 1/16 DIA. WAS 1 1/8 DIA. WT. CHG. NEG.		
				Z	ADDED #10 (.193) HOLE & LOCATING DIMS 2 & 1 1/2 & AN520-10-10		

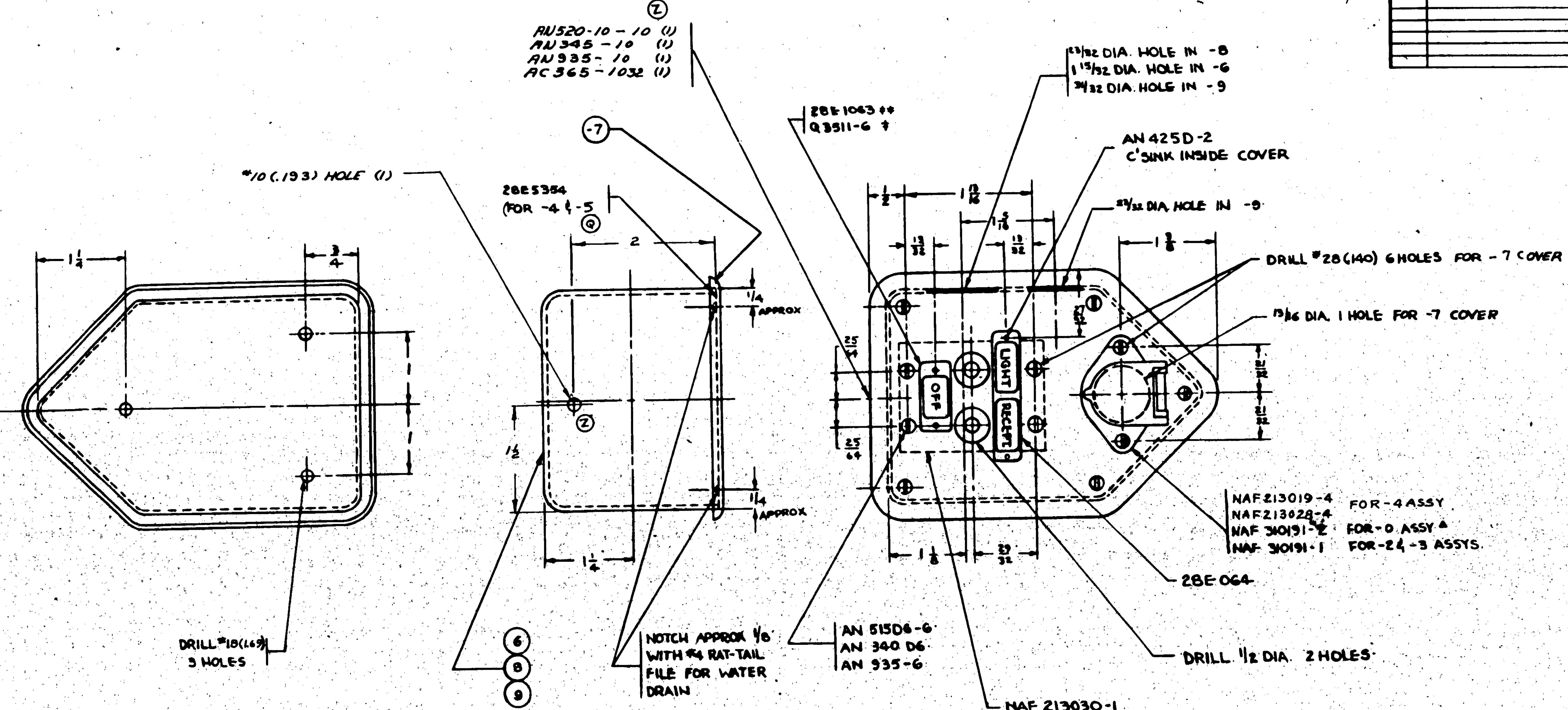

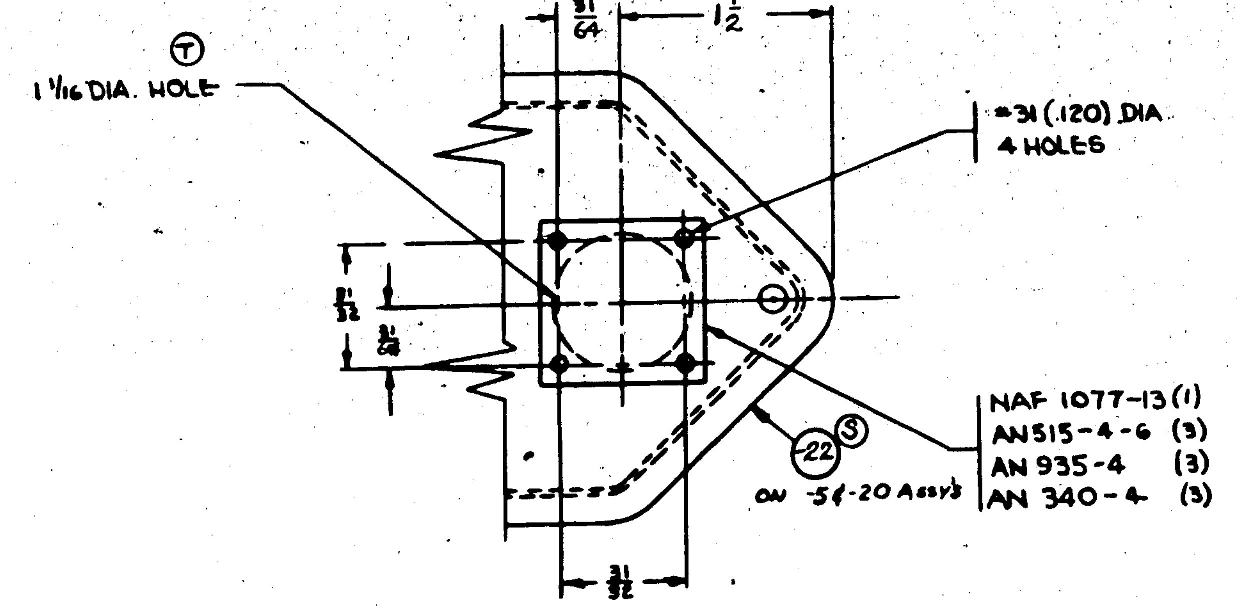

DETAIL "A"

FOR -4, -5 & -20 ASSYS

-5 IDENTICAL TO -4 EXCEPT AS SHOWN
-20 IDENTICAL TO -3 EXCEPT AS SHOWN

Ⓟ

NOTES:

Ⓡ

● GOV'T FURNISHED
‡ PBY-4 & FUTURE
‡‡ PBY-2, PBY-3 & 28-5MC #1-5 ONLY
■ -2N & -3N SAME AS -2 & -3 EXCEPT FOR DUTCH WORDING
▲ PBY-2 ALL & PBY-3 #0842
● EFF. PBY-3 #0843

1. STAMP PART NO. ON BOTTOM INSIDE OF BOX & ON INSIDE OF COVER
2. DO NOT FINISH CONDUIT HOLES MARGINS OUTSIDE ONLY FOR 3/32"
3. REMOVE PIN #2 FROM RECEPTACLES
4. SHELLAC 28E5354 TO INSIDE OF 28E2113-7 & COVER WITH SHELLAC
5. FINISH P-26P AFTER DRILLING

Ⓠ

ASSY DASH NO.	MODEL	NEXT ASSY.	NO.
-20	PBY-5A	28E5663	1
-5	PBY-5	28E1013	1
-4	PBY-5	28E1013	1
-3	28-5AMC	28E5663	1
-3	PBY-5A	28E5663	1
-3N	28-5AMN	28E5663	1
-2N	28-5MN	28E5647	1
-2	28-5MA (ME)	28E5520	1EA
-2	28-5MC	28E5647	1
-2	PBY-5	28E1013	1
-2	PBY-4	28E1013-202	1
-2	PBY-3	28E1013-202	1
-0	PBY-2	28E1013-[illegible]	1

REQUIREMENTS PER AIRPLANE

NO.(2) 464; MCR173(2) C-91876 ALL; C-73406; C-70496 #1-117

PART No	STOCK	MATERIAL	SPEC.	-0	-2	-3	-4	-2N	-3N	-5	-20		
Q3511-6 ‡					1	1	1	1	1	1	1		
AC365-1032				1	1	1	1			1	1		
AN935-10				1	1	1	1			1	1		
AN935-4							3			3	3		
AN515-4-6							3			3	3		
AN515D6-6				4	4	4	4			4			
AN425D2				4	4	4	4			4	4		
AN935-6				4	4	4	4			4	4		
AN340D6				4	4	4	4			4	4		
AN340-4							3			3	3		
AN345-10				1	1	1	1			1	1		
AN520-10-10				1	1	1	1			1	1		
NAF 310191-2	● TYPE C-3A			1									
NAF 310191-1	● TYPE C-3				1	1	1						
NAF 213030-1				2	2	2	2			2	2		
NAF 213028-4							1						
NAF 213019-4							1						
NAF 1077-13										1	1		
28E5354							1			1			
28E1063 ‡‡				1	1								
28E064				1	1	1	1	1	1	1	1		
-22							1			1	1		
9							1			1			
8	MAKE FROM NAF-39323-1					1		1	1		1		
7				1	1	1		1	1				
6				1	1			1					

PARTS LIST PER ASSY.

REPLACES 28E2113 OF 10-8-37 | .70 CALC. WT.
REPLACED BY | ACT. WT.
± 1/32 | SCALE 12" = 1'0"
STAMP PART NUMBER WHERE SHOWN

AC —	—						
NAVY NONE	P-26P (SEE NOTE 5)	10-8-37	10-12-37				
HEAT TREAT	FINISH	DRAFT	CHECK		MAT		ENG.

OPP. HAND

NAME BOX ASSY-ELEC. B'LKH'D #4 SWITCH

DWG G 28E2113.

CONSOLIDATED AIRCRAFT CORP. SAN DIEGO, CALIF.

R 6112387

LET	ALTERATION	DATE	BY
C	TRACED	2-28-38	Stacy

SUPPLIES & EQUIPMENT CLASSIFICATION

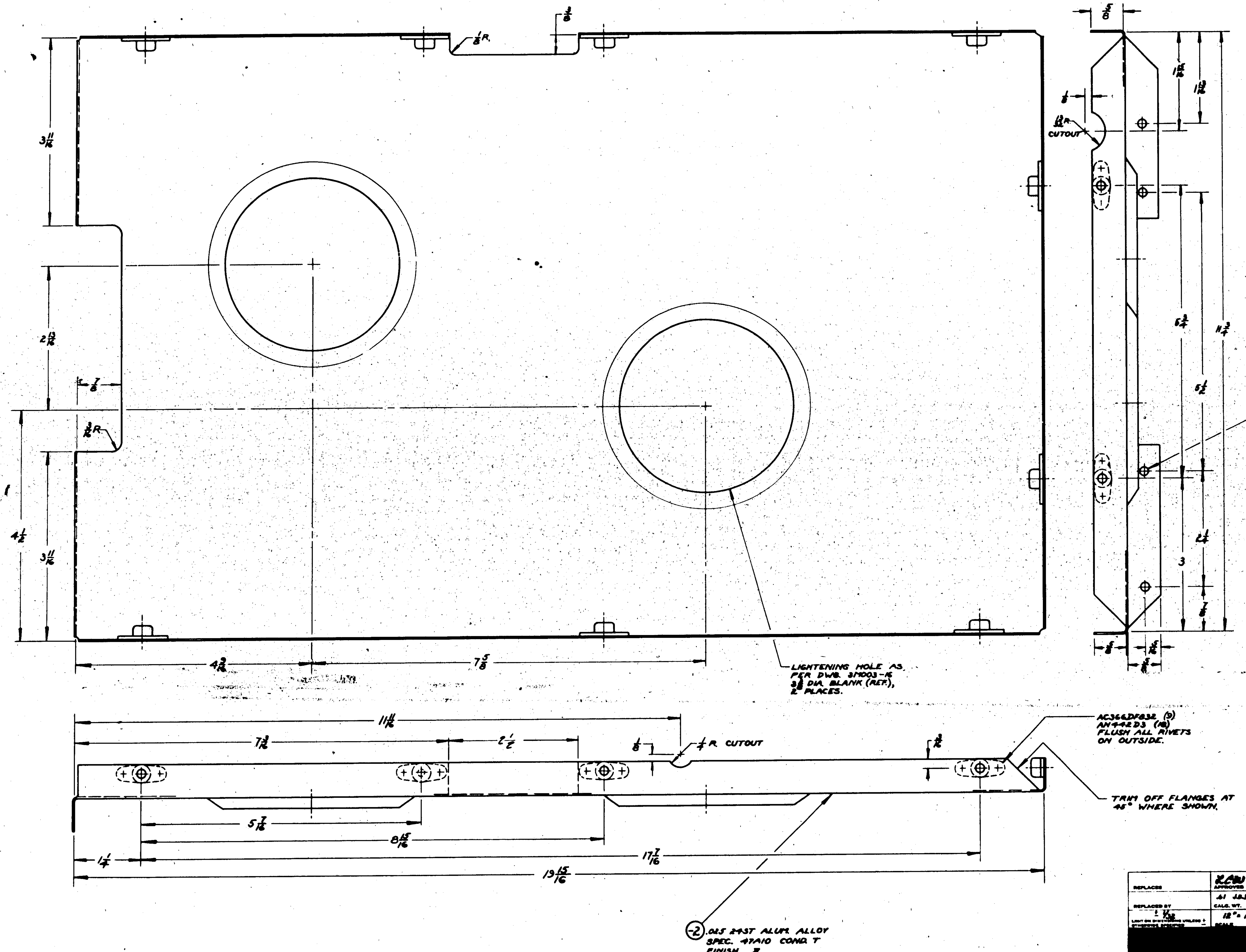

NOTE:
ALL BEND RADII 1/16

FINISH CODE	
Z	ANODIC TREATMENT
P	P-27 PRIMER
AP	ALUMINIZED PRIMER
C	CADMIUM PLATE

O. H.	MODEL	NEXT ASSY.	REQ.	ST'D PARTS	LH	RH	PART NO.	REQ.
							AN442D3	18
							AC366DF832	9
	PBY-5B	28E2101	1					
	PBY-4	28E2101						
	PBY-3	28E2101						
	PBY-2	28E2101					28E2114-2	1

REQUIREMENTS PER AIRPLANE | MAT. | PARTS LIST PER ASSY.

REPLACES	APPROVED: LCW	DATE: 2-29-38
REPLACED BY	CALC. WT.: .61 LBS.	ACT. WT.: .58
LIMIT ON DIMENSIONS UNLESS OTHERWISE SPECIFIED: ± 1/32	SCALE: 12" = 1'-0"	

AC				
NAVY NOTED	NOTED	NONE	NOTED	
MATERIAL	SPEC.	HEAT TREAT	FINISH	DRAFT: J. R. Phillips / CHECK / EXAM. / Munro

CONSOLIDATED AIRCRAFT CORP.
SAN DIEGO, CALIF.

NAME: PAN ASSEM - ELEC. - RANGE

OPP. HAND

DWG. SIZE G 28E2114

LET	ALTERATION	DATE	BY
Z	ADDED: VIEW D-D "28L43N NOTE (LOCATING DIMS THAT IS AN130-10-10, AN338-10, AN 935-10 PER SEC 368-1088 REVISED NOTE	8-12-43	[illegible]

LET	ALTERATION	DATE	BY
S	REDRAWN	10-16-43	MOE
T	IN-16 ASSY-13 COVER WAS -8, -18 BOX WAS -11. NAF1077-13 (2) AN515 #4-6 (6) AN935-4 (2) AN340-4 (2) WERE NAF310191-1 (2). CREATED -17 ASSY. NT. CHG. REQ.	2-24-44	MOE
U	REMOVED -17 ASSY & ADDED -16 ASSY FOR PAY-SA. NO NT. CHG.	3-16-44	[illegible]
V	ADDED 2 HOLES 25/32 Ø 31/32 DIA. FOR -15 BOX NO NT. CHG.	4-24-44	[illegible]
W	-14 ASSY. C.91876-1-89 REPLACED BY -16 ASSY C.91876 WT. CHG. REQ.	4-24-44	MOE
X	DETAIL "C" - DIM. 31/32 WAS 31/64 & DIM. 1 1/4 WAS 31/64 SHOWN TO OUTSIDE OF COVER NO WT. CHG.	5-7-44	[illegible]
Y	ADDED ΔRENCIL NOTE & DIMS 3/16 R TYP & 5/16 TO -18 COVER. NO WT. CHG.	8-12-44	MOE

VIEW SHOWING HOLE LOCATIONS IN BOX ON -5 ASSY ONLY.

NAF310191-1 TYPE (C-3) NOT USED ON -8 & BOXES SEE DETAIL "C"

VIEW A A

DRILL 1/8 (2 PLACES) FOR WATER DRAIN

(T) (13) (FOR -16 ONLY)

(8) COVER

BEND ℄

1/8 APPROX.

(T) DETAIL "C" (FOR -16 ONLY)

.120 DIA. (4 HOLES)

NAF1077-13 (1)
AN515-4-6 (3)
AN935-4 (3)
AN340-4 (3)

(V) IN -10, -11, -12, -15 & -18 BOXES (REF.)

CSINK INSIDE COVER AN425-D2

25/32 DIA. FOR -10 BOX (REF.) ONLY
23/32 DIA. FOR -11, -12, -15 & -18 BOXES (REF.)

28E064

LIGHT RECEPT OFF

DRILL 1/2 2 HOLES

13/16 D. 2 HOLES

25/32 DIA. HOLE FOR -15 BOX ONLY

* NAF310191-1 TYPE (C-3) (NOT USED ON -13 COVER SEE DETAIL "B"

NAF213030-1

Q3511-6

AN515D6-6
AN340D6
AN935-6

-12 BOX (REF.) ONLY

1 7/32 DIA. FOR -9 (REF.)

31/32 DIA. ON -10 BOX (REF.) ONLY

3/32 NO FINISH

(-15) FOR -14 ASS'Y ONLY
(-9) FOR -5 ASS'Y ONLY
(-10) FOR -6 ASS'Y ONLY
(-11) FOR -6 & -14 ASS'Y ONLY
(-12) FOR -6 & -7 ASS'Y ONLY
(-18) FOR -16 ASS'Y ONLY

MAKE BOX FROM NAF 39923-1

FOR -18 BOX (REF.) ONLY

AN520-10-10 (1)
AN 345-10 (1)
AN 936-10 (1)
AC 365-1032 (1)
(Z)

.120 DIA (4 HOLES)

NAF1077-13 (1)
AN515 - 4 - 6 (3)
AN935-4 (3)
AN340-4 (3)

(Y) STENCIL IN 3/16" BLACK BLOCK LETTERS ON BOX COVER

LIGHT DISTRIBUTION BOX

(T) DETAIL "B" (FOR -16 & -7 ONLY)

VIEW D-D (Z)

* GOV'T. FURN. PARTS

NOTES:

1. DO NOT FINISH CONDUIT HOLE MARGINS OUTSIDE ONLY FOR 3/32 RADIAL DISTANCE. FINISH P-2 GP AFTER DRILLING.
2. ON -16, SHELLAC 28E5356-6 (1) & 28E5356-7 (1) TO INSIDE OF BOX.

-16	PBY-5A	28E5463	/	
-16	PBY-5	28E1013	/	
-14	PBY-5A	28E5463	/	
-7	28-5MC	28E5347	/	
-6N	28-5MN	28E5463	/	
-6N	PB-5MN	28E5467	/	
-6E	28-5MN/E	28E5347/E	/	
-6	PB-5MC	28E5463	/	
-6	PBY-5A	28E5463	/	
-6	PBY-5	28E1013	/	
-9	PBY-5A	28E5463	/	
-0	PBY-4	28E1013	/	
-0	PBY-3	28E1013	/	

ITEM Basic No.	MODEL	Next Assy	REQ.
REQUIREMENTS PER AIRPLANE			
REPLACED 28E3018 OF S-28-37		.93 Basic Wt.	
REPLACED BY		Net Wt.	
Cast to Dimensions Below	Grade 12-1'-0"		
STAMP PART NUMBER WHERE SHOWN			

PART No	STOCK	MATERIAL	SPEC.	LP	LP	LP	LP	RP	RP	LP	RP
	PARTS LIST PER ASSY.			2 2 B	2 2 B	2 2 C	2 2 C	2 2 B	2 2 B	2 2 B	2 2 B
				-0	-5	-6	-7	-14	-16		
AC365-1032											
AN 345-10											
NAF39923B-1											
NAF28W8-1				2	2	2	2	2	2		
NAF213030-1				4	4	4	4	4	4		
NAF1077-13										2	
AN935-10										1	
AN537-6A											
AN515-6				1	1	1	1	1	1		
AN525-632				4	4	4	4	4	4		
AN935-6				8	8	8	8	8	8		
AN935-4										6	
AN515D6-6										2	
AN515-4-6				8	8	8	8	8	8	6	
AN340-4										6	
AN340D6-6										2	
28E5463-7										1	
28E5463-6										1	
28E5463-5										1	
28E0064				1	1	1	1	1	1		
28E0652				1	1	1	1	1	1		
										1	
				-18							
				-15							
				-13							
				-12							
				-11							
				-10							
				-9							
28E3018-8				1	1	1	1	1	1		

△C							
NAVY NOTED	NOTED	WEIGHT					
HEAT TREAT	FINISH	DRAFT	CHECK	STRESS	MAT	DESIGN	ENG

NAME BOX ASSEM-ELEC. BULKHEAD "6 SWITCH

OPP HAND

DWG G

28E3018

CONSOLIDATED AIRCRAFT CORP. SAN DIEGO CALIF.

28E3018

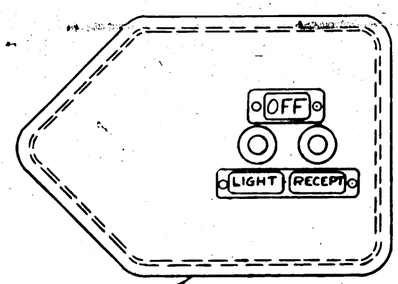

28E3018-6E ASSY.

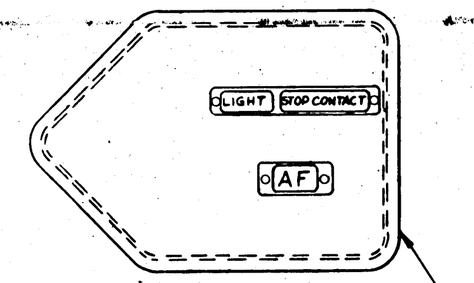

28E3018-6N ASSY.

ARRANGEMENT OF NAME PLATES

FINISH CODE	
Z	SMOOTH TREATMENT
P	P-27 PRIMER
AP	ALUMINIZED PRIMER
C	CADMIUM PLATE

NOAL(S)464
C.91816
C.88476 ONLY

C.70496 & 77713
C.70496

28E3018

COPY No. 2

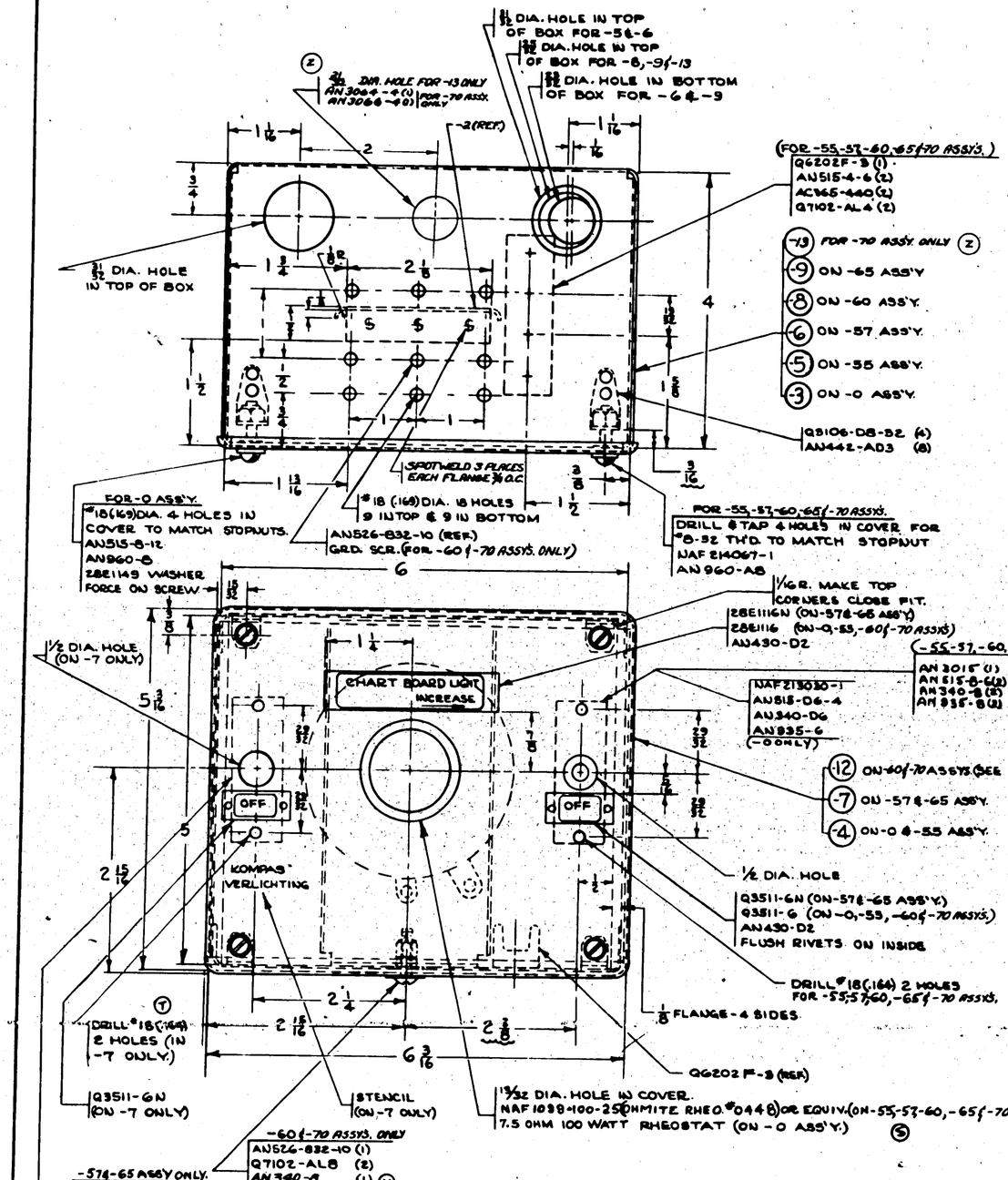
Ⓩ 3/32 DIA. HOLE FOR -13 ONLY AN3064-4(1) AN3065-4(1) FOR -70 ASSY. ONLY
11/32 DIA. HOLE IN TOP OF BOX FOR -5 & -6
13/32 DIA. HOLE IN TOP OF BOX FOR -8, -9 & -13
13/32 DIA. HOLE IN BOTTOM OF BOX FOR -6 & -9
-2 (REF.)
3/32 DIA. HOLE IN TOP OF BOX
SPOTWELD 3 PLACES EACH FLANGE 3/4 O.C.
FOR -0 ASS'Y.
#18(.169)DIA. 4 HOLES IN COVER TO MATCH STOPNUTS.
AN515-8-12
AN960-8
2BE1149 WASHER FORCE ON SCREW
#18(.169)DIA. 18 HOLES 9 IN TOP & 9 IN BOTTOM
AN526-832-10 (REF.)
GRD. SCR. (FOR -60 & -70 ASSYS. ONLY)
1/2 DIA. HOLE (ON -7 ONLY)
CHART BOARD LIGHT INCREASE
OFF
KOMPASS VERLICHTING
DRILL #18(.169) 2 HOLES (IN -7 ONLY.)
Q3511-6N (ON -7 ONLY)
STENCIL (ON -7 ONLY)
-57 & -65 ASS'Y ONLY.
AN 3015(1)
AN 515-8-6(2)
AN 340-8(2)
AN 935-8(4)
-60 & -70 ASSYS. ONLY
AN526-832-10 (1)
Q7102-AL8 (2)
AN340-8 (1) (V)
AC365-832 (1)
1/16 R. MAKE TOP CORNERS CLOSE FIT.
2BE1116N (ON -57 & -65 ASS'Y.)
2BE1116 (ON -0, -55, -60 & -70 ASSYS.)
AN430-D2
NAF213030-1
AN515-D6-4
AN340-D6
AN935-6 (-0 ONLY)
1/2 DIA. HOLE
Q3511-6N (ON -57 & -65 ASS'Y.)
Q3511-6 (ON -0, -55, -60 & -70 ASSYS.)
AN430-D2
FLUSH RIVETS ON INSIDE
DRILL #18(.164) 2 HOLES FOR -55, -57, -60, -65 & -70 ASSYS.
1/8 FLANGE - 4 SIDES
QQ202 F-3 (REF.)
13/32 DIA. HOLE IN COVER. NAF1088-100-25 OHMITE RHEO. #0448 OR EQUIV. (ON -55, -57, -60, -65 & -70 ASSYS.)
7.5 OHM 100 WATT RHEOSTAT (ON -0 ASS'Y.) (S)
(FOR -55, -57, -60, -65 & -70 ASSYS.)
Q6202F-3 (1)
AN515-4-6 (2)
AC365-440 (2)
Q7102-AL4 (2)
-13 FOR -70 ASS'Y. ONLY Ⓩ
-9 ON -65 ASS'Y.
-8 ON -60 ASS'Y.
-6 ON -57 ASS'Y.
-5 ON -55 ASS'Y.
-3 ON -0 ASS'Y.
Q3106-D8-32 (4)
AN442-AD3 (8)
FOR -55, -57, -60, -65 & -70 ASSYS.
DRILL & TAP 4 HOLES IN COVER FOR #8-32 TH'D TO MATCH STOPNUT
NAF 214067-1
AN 960-A8
AN 3015 (1)
AN 515-8-6(2) (T)
AN 340-8 (2)
AN 935-8 (2)
(-55, -57, -60, -65 & -70 ASSYS.)
(12) ON -60 & -70 ASSYS. (SEE DET. 'A')
(-7) ON -57 & -65 ASS'Y.
(-4) ON -0 & -55 ASS'Y.
(T) DRILL #18(.164) 2 HOLES (IN -7 ONLY.)
Q3511-6N (ON -7 ONLY)
STENCIL (ON -7 ONLY)
-57 & -65 ASS'Y ONLY.
AN 3015(1)
AN 515-8-6(2)
AN 340-8(2)
AN 935-8(4) (T)
-60 & -70 ASSYS. ONLY
AN526-832-10 (1)
Q7102-AL8 (2)
AN340-8 (1) (V)
AC365-832 (1)
13/32 DIA. HOLE IN COVER. NAF1088-100-25 OHMITE RHEO. #0448 OR EQUIV. (ON -55, -57, -60, -65 & -70 ASSYS.)
7.5 OHM 100 WATT RHEOSTAT (ON -0 ASS'Y.) (S)

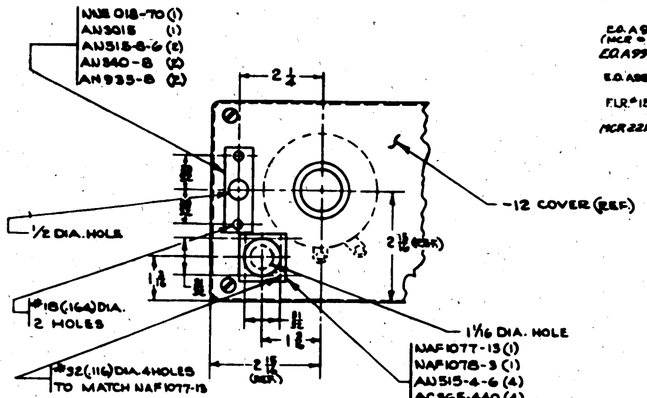

DETAIL "A"
FOR -60 & -70 ASSYS. ONLY.
SCALE 6" = 1'-0"

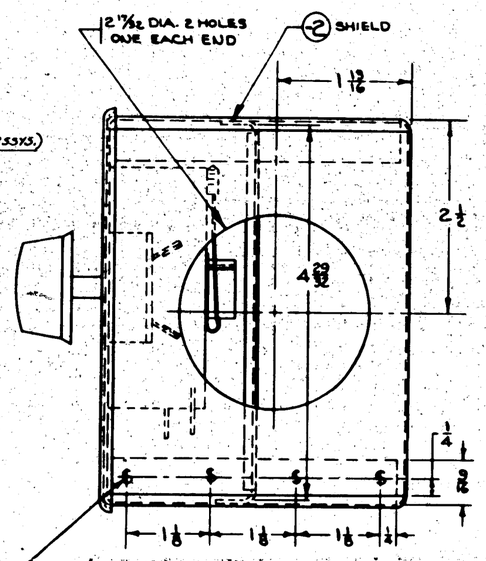

E.O. A9117 (MCR = 17)
E.O. A99144
E.O. A98877
F.I.R. #18790
MCR 2218-7

LET	ALTERATION		BY
(E.O. NO.)	NOTE REVISED (R):		
	NHS. WT. CHG.		
U	H.T. "NOTED" WAS H.T. 38-43		FUHR
	ADDED NOTE 5 & (NO WT. CHG.)	12-19-44	
V	DN -60 ASS'Y. AN 340-8(1) WAS AN 340-8(2)		
	AN 340-8(2) DEL. CHG. NHS.	1-27-45	
W	REVISED NOTE 5 & WT. CHG. 2BE5214		
	WAS 3BE5214-6 WT. CHG. NEG.	8-10-45	
Y	IN NOTE 5 & (#) 4-6 WAS ADDED		
	TO 2BE5214 NO WT. CHG.	8-20-45	
Z	CHANGED -70 ASS'Y. FROM -60 ASS'Y. (WHEN FOR -60 ASS'Y. ORDERED) TO 2BA1A"68 FOR 2BE1211-7 WAS 2BA1A"52		
	CHG. WT. CHG. NEG.	4-4-46	
AA	REMOVED NOTE 2 "AFTER PAINT & NOTE "4" -4--2BE" IN FINISH BLOCK "IP-16P OUTSIDE ONLY UNLESS NOTED" WT. CHG. NEG.	4-4-46	
AB	IN NHS FOR -5, -6, -8, -9, -13 FORCE ERROR MARKING "B" WAS FROM FROM 3BE1164-B		
AC	CHG. WT. CHG. NEG.	4-4-46	

LET	ALTERATION		BY
P	REDRAWN & REVISED AS PER E.O. #A31824 & E.O. #A36604	9-7-42	Stone
Q	ADDED 2BE1116-6(1) & NOTE 5 PER MFG. CHG. APPVD.	10-16-42	Stone
R	CHANGE -5 & -6 ASSY. TO REMAIN -5 & -6 PER PSV-EA CONF. 8843A	6-8-43	Stone
S	-16 & WW. ENCLOSED WITH & FOR PSV-EA, NAF1088-100-25 OHMITE RHEO. #0448 OR EQUIV. WAS #0445. -5 & -6 ASS'Y. REMOVED AN 515-8-6(2) AN 340-8(2) AN 935-8(4) ADDED AN 515-8-6(2) AN 340-8(2) AN 935-8(4) AND 1 EA. ON -5 & -6 ASS'Y. REMOVED AN 515-8-6(2) AN 340-8(2) AN 935-8(4) ADDED AN 515-8-6(2) AN 340-8(2) AN 935-8(4)	8-10-43	Stone
T	ON -55 & -57 ASS'Y. REMOVED AN 515-8-6(2) AN 340-8(2) AN 935-8(4) ADDED AN 515-8-6(2) AN 340-8(2) AN 935-8(4) AND 1 EA. ON -55 & -57 ASS'Y. REMOVED AN 515-8-6(2) AN 340-8(2) AN 935-8(4) ADDED AN 515-8-6(2) AN 340-8(2) AN 935-8(4)	8-10-43	Stone
U	-8 & -9 ASS'Y. REMOVED AN 515-8-6(2) AN 340-8(2) AN 935-8(4) ADDED AN 515-8-6(2) AN 340-8(2) AN 935-8(4) AND 1 EA. ON -8 & -9 ASS'Y. REMOVED AN 515-8-6(2) AN 340-8(2) AN 935-8(4) ADDED AN 515-8-6(2) AN 340-8(2) AN 935-8(4)	8-10-43	Stone
V	-13 ASS'Y. REMOVED AN 515-8-6(2) AN 340-8(2) AN 935-8(4) ADDED AN 515-8-6(2) AN 340-8(2) AN 935-8(4) AND 1 EA. ON -13 ASS'Y. REMOVED AN 515-8-6(2) AN 340-8(2) AN 935-8(4) ADDED AN 515-8-6(2) AN 340-8(2) AN 935-8(4)	8-10-43	Stone
W	-0 & -70 ASS'Y. REMOVED AN 515-8-6(2) AN 340-8(2) AN 935-8(4) ADDED AN 515-8-6(2) AN 340-8(2) AN 935-8(4) AND 1 EA. ON -0 & -70 ASS'Y. REMOVED AN 515-8-6(2) AN 340-8(2) AN 935-8(4) ADDED AN 515-8-6(2) AN 340-8(2) AN 935-8(4)	8-10-43	Stone
X	-60 ASS'Y. REMOVED AN 515-8-6(2) AN 340-8(2) AN 935-8(4) ADDED AN 515-8-6(2) AN 340-8(2) AN 935-8(4) AND 1 EA. ON -60 ASS'Y. REMOVED AN 515-8-6(2) AN 340-8(2) AN 935-8(4) ADDED AN 515-8-6(2) AN 340-8(2) AN 935-8(4)	8-10-43	Stone
Y	-12 ASS'Y. REMOVED AN 515-8-6(2) AN 340-8(2) AN 935-8(4) ADDED AN 515-8-6(2) AN 340-8(2) AN 935-8(4) AND 1 EA. ON -12 ASS'Y. REMOVED AN 515-8-6(2) AN 340-8(2) AN 935-8(4) ADDED AN 515-8-6(2) AN 340-8(2) AN 935-8(4)	8-10-43	Stone
Z	-4 ASS'Y. REMOVED AN 515-8-6(2) AN 340-8(2) AN 935-8(4) ADDED AN 515-8-6(2) AN 340-8(2) AN 935-8(4) AND 1 EA. ON -4 ASS'Y. REMOVED AN 515-8-6(2) AN 340-8(2) AN 935-8(4) ADDED AN 515-8-6(2) AN 340-8(2) AN 935-8(4)	8-10-43	Stone
AA	-55 & -57 ASS'Y. REMOVED AN 515-8-6(2) AN 340-8(2) AN 935-8(4) ADDED AN 515-8-6(2) AN 340-8(2) AN 935-8(4) AND 1 EA. ON -55 & -57 ASS'Y. REMOVED AN 515-8-6(2) AN 340-8(2) AN 935-8(4) ADDED AN 515-8-6(2) AN 340-8(2) AN 935-8(4)	8-10-43	Stone
AB	-60 & -70 ASS'Y. REMOVED AN 515-8-6(2) AN 340-8(2) AN 935-8(4) ADDED AN 515-8-6(2) AN 340-8(2) AN 935-8(4) AND 1 EA. ON -60 & -70 ASS'Y. REMOVED AN 515-8-6(2) AN 340-8(2) AN 935-8(4) ADDED AN 515-8-6(2) AN 340-8(2) AN 935-8(4)	8-10-43	Stone
AC	-0 & -55 ASS'Y. REMOVED AN 515-8-6(2) AN 340-8(2) AN 935-8(4) ADDED AN 515-8-6(2) AN 340-8(2) AN 935-8(4) AND 1 EA. ON -0 & -55 ASS'Y. REMOVED AN 515-8-6(2) AN 340-8(2) AN 935-8(4) ADDED AN 515-8-6(2) AN 340-8(2) AN 935-8(4)	8-10-43	Stone

FINISH CODE	
Z	ANODIC TREATMENT
P	F-27 PRIMER
AP	ALUMINIZED PRIMER
C	CADMIUM PLATE

GP - GREEN PRIME

PART No	STOCK	MATERIAL	SPEC	LN REQ	BM REQ	LN REQ	BM REQ	LN REQ	BM REQ
	PARTS LIST PER ASSY.			-0	-55 & -70	57	-60	-65	
	NAF1088-100-25 OHMITE RHEOSTAT #0448 OR EQUIV. 7.5 OHM-100 WATT RHEOSTAT (OHMITE MFG. CO.)								
	NAS 618-70								
	NAF 214067-1			4	4	4	4	4	4
	NAF 213030-1								
	NAF 1078-3								
	NAF 1077-13								
	Q7102-AL4			2	2	2	2	2	2
	Q7102-AL8			2	2	2	2	2	2
	Q6202F-3								
	Q3511-6N				2				
	Q3511-6			4	4	4	4	4	4
	Q3106-D8-32								
	AN526-832-10								
	AN3015 TYPE B-5A SWITCH			2	2	2	2	2	2
	AN960-A8				4	4	4	4	4
	AN340-8			4					
	AN935-8			2	2	4	4	4	4
	AN515-8-6								
	AN515-8-12			2					
	AN426-832-10								
	AN515-8-8			4					
	AN515-8-10								
	AN515-8-6			2	2	4	4	4	4
	AN515-8-4								
	AN515-8-3								
	AN960-8								
	AN960-10								
	AN960-D8								
	AN430-D2			2	2	4	4	4	4
	AC365-832								
	AC365-440			4	4	4	4	4	4
	2BE1116								
	2BE1116N								
	2BE1149			4					
-13	MAKE FROM 2BE1164-8								
-12	MAKE FROM 2BE1164-8								
-9	MAKE FROM 2BE1164-8								
-8	MAKE FROM 2BE1164-8								
-7	MAKE FROM 2BE1164-8								
-6	MAKE FROM 2BE1164-8								
-5	MAKE FROM 2BE1164-8								
-4	MAKE FROM 2BE1164-8								
-3	MAKE FROM 2BE1164-8								
-2	.040 X 1 1/8 X 6 1/4 AL. AL. SHT.	4TAB-A							

DASH NO.	MODEL	PRINT ASSY
-0	PBY-5A	28E1012
-55	PBY-5A	28E1012
-57	PBY-5A MN	28E1012
-60	PBY-5A MC	28E1012
-65	PBY-5 MC	28E1012
-70	PBY-5 MC	28E1012
-4	PBY-5 MA	28E1012
-5	PBY-5 MA	28E1012
-6	PBY-5 MA	28E1012
-8	PBY-5A	28E1012
-9	PBY-5A	28E1012
-13	PBY-5	28E1012

REQUIREMENTS PER AIRPLANE

CONTRACT	(1-5-42)
28E4006	(29-10-42)
DRAWN BY	
CHK'D BY	
APP'D BY	
SCALE 1/32	DRAW 12"-1'-0"
STAMP PART NUMBER WHERE SHOWN	NOTED

C.70496, C.70497, C.71713 (-7)
C.69478 (53370 MFR.) (-13)
C.69876 (-9)
C.70496 (-8)

NOTES:

1. DO NOT FINISH HOLE MARGINS ON OUTSIDE FOR 5/32 RADIAL DISTANCE.
(AA)
3. #0445 & #0448 OHMITE RHEOSTATS MAY BE PURCHASED FROM - OHMITE MFG. CO., CHICAGO, ILL. (SPEC. 17R1)
(W) (Q)
5. APPLY 2BE5214-6 INSIDE OF BOX ON SHIELD. IF BLUE PRINT CUT-OUT IS USED, APPLY WITH & COVER OVER WITH SHELLAC.
(U)
6. NO H.T. NECESSARY FOR -2, -4, -5, -6, -7, -8, -9, -12.

A.C.			
NAVY NOTED	IP-16P OUTSIDE ONLY		
HEAT TREAT	FINISH		
NAME BOX ASSEMBLY ELEC. - B'LKH'D. #3 - SWITCH			
CONSOLIDATED AIRCRAFT CORP. San Diego, Calif.			

		1-27-43	
		12-3-42	MANAGER H.W.H.
		9-9-42	CH. OF GP. MED. Blum
			APPROVED
DRAWN	CHK'D	STRUCT.	QUAL.
OPP. NAME			
DWG. SIZE G	DWG. NO. 28E4006		

28E4006

SUPPLIES & EQUIPMENT CLASSIFICATION			
LET	ALTERATION	DATE	BY
A	FORCED	3-5-41	[illegible]
B	RIVETS (@ AN455-DB) REPLACED BY SCREWS (@ AN526DD632-5) AND NUTS (@ AC365-D632). ADDED ASS'Y @ 28B1011 FOR MODELS @ PBY-5 & PBY-5A IN REQ. PER AIRPLANE BLOCK.	4-14-41	CAMP
C	CH'GD "OFF" & "ON" DESIGNATIONS FOR -1 & -2 ASS'Y, ADDED NOTE & BROUGHT REQ'S PER AIRPLANE UP TO DATE.	11-11-41	[illegible]
D	ADDED -2 ASS'Y. & CHANGED 28E4033 TO 28E4033-3 FOR -700 ASS'Y.	8/1/42	[illegible]

E.O. 35846 PBY-5 & 5A 28-5AMC 28-5M/OA-10

E.O. 16662 28-5ME & 28-5MA

E.O. 61037 PBY-5A

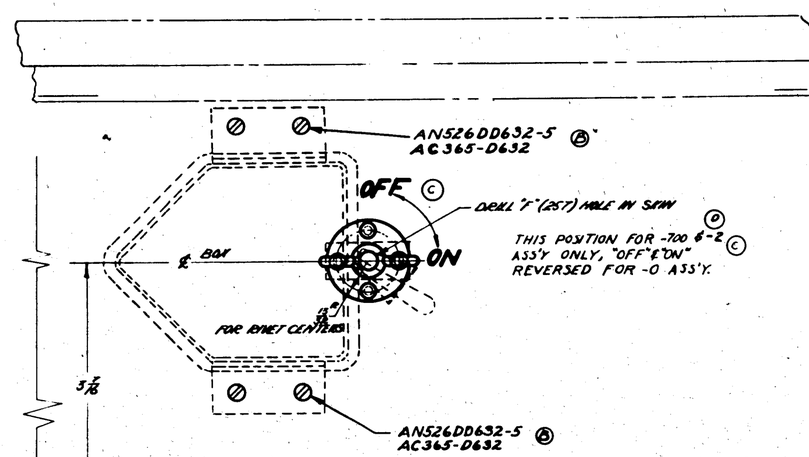

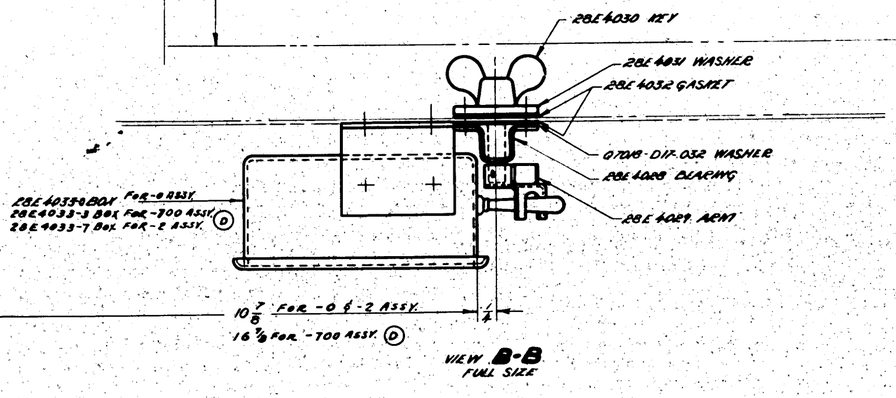

VIEW B-B FULL SIZE

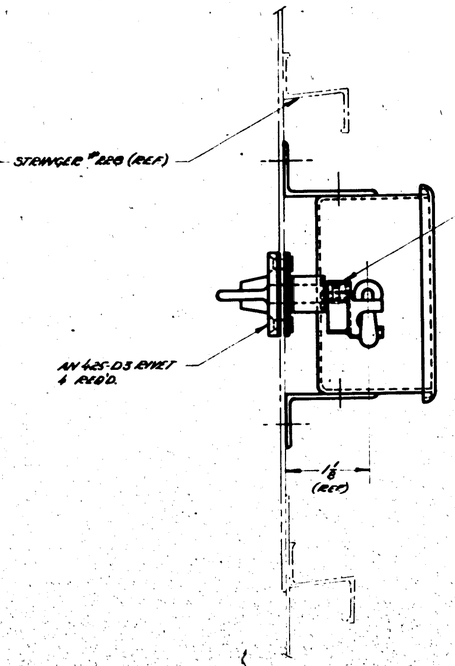
STRINGER #228 (REF.)
AN380-2-2
DRILL 1/8 HOLE IN SHAFT FOR COTTER. LOCATE HOLE SO THAT PROJECTION POINTS TO "OFF" WHEN SWITCH IS DOWN
AN 425-D3 RIVET 4 REQ'D.
1/8 (REF.)

3

Ⓒ THIS POSITION FOR -700 & -2 ASS'Y. Ⓓ ASS'Y. ONLY — "OFF" & "ON" REVERSED FOR -0 ASS'Y.

APPROX LOCATION OF 1/2 BLACK STENCILED LETTERS. SHELLAC OVER.

VIEW A-A FULL SIZE

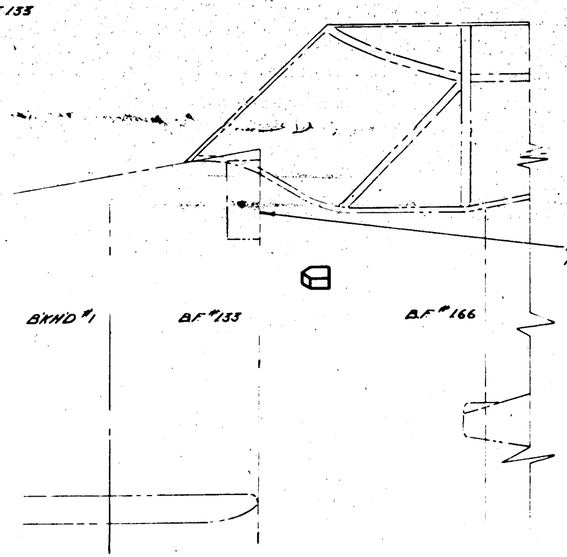

PORT SIDE OF HULL LOOKING INBOARD SCALE 1/2" = 1'

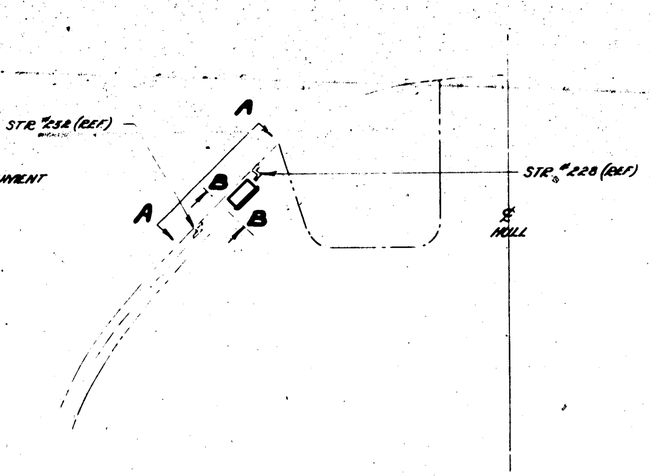

PORT SIDE OF HULL LOOKING FORWARD AT BF #166 SCALE 1/2" = 1'

									0704B-D17-032	1	1	0
Ⓓ	-2	PBY-5B	28E6045						28E4033-7			1
Ⓒ	-700	28-5ME	28E5536						28E4033-3			1
	-700	28-5MA	28E5536						28E4033-3			1
		OA-1O	28E1011						AN4-4032	1		0
		28-5MA	28E1011						AN4-4032	A		2
		28-5AMC	28E1011	+	ANSLINK 2-3		4		AN4-4031	1		1
		PBY-5A	28B1011	4	AN380-2-2		4		AN4-4030	1		1
		PBY-5	28E1011	4	AN455-D3		4		AN4-4029	1		1
		PBY-A	28E1011	1	AN380-2-2		1		28E4028	1		1
				-0 -700 -2					PART NO.	-0 -700 -2		
				ST'D PARTS REQ.								
				MAT.					PARTS LIST PER ASSY.			

REPLACES	ECN	4-21-39				1/16	1/16
REPLACED BY	APPROVED	DATE				HULL	[illegible]
LIMIT ON DIMENSIONS UNLESS OTHERWISE SPECIFIED ± NOTED	.38					DRAFT	CHECK
	CALC.WT.	ACT.WT.	O.H.	MODEL	NEXT ASSY.		
	SCALE NOTED		REQUIREMENTS PER AIRPLANE				
	AC						
	NAVY NOTED		NOTED	NOTED	NOTED		
	MATERIAL		SPEC.	HEAT TREAT	FINISH		

CONSOLIDATED AIRCRAFT CORP. BUFFALO, N.Y.

STAMP PT. No. WHERE SHOWN

NAME: SWITCH INSTALL - ELEC EXTERIOR ANCHOR LIGHT

OPP. HAND

SIZE G

28E4028

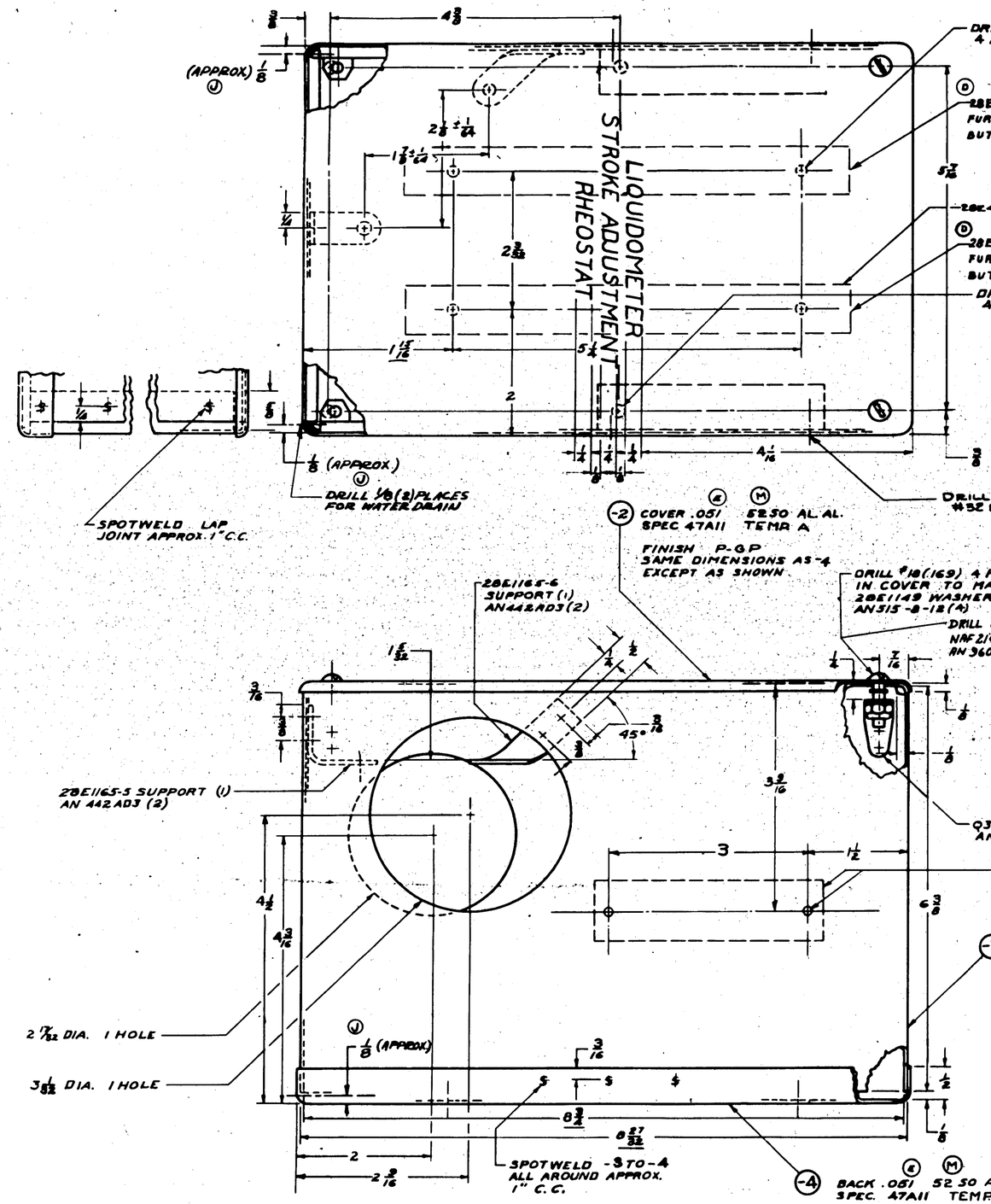

-2 COVER .051 SPEC 47A11 — E M 52S0 AL. AL. TEMP A

FINISH P-G P
SAME DIMENSIONS AS -4 EXCEPT AS SHOWN

DRILL #18 (.169) 4 HOLES IN COVER TO MATCH BOX
28E1149 WASHER (4)
AN515-8-12 (4)
} FOR PBY-3 & -5 ASS'YS.

DRILL & TAP COVER FOR 8-32 (NC-2) THD, 4 PLACES
NAF 21/4067-1 (4)
AN 360-A8 (4)
} FOR -6 ASS'Y, -7 ASS'Y & -8 ASS'Y.

-3 SIDE .051 52S0 AL. AL. SPEC. 47A11 TEMP. A

-4 BACK .051 52S0 AL. AL. SPEC. 47A11 TEMP. A — E M

NOTES:-

1. ALL BENDS 1/8 R. FINISH -3 & -4 AFTER WELDING: P-2 GP. * STENCIL BLACK BLOCK LETTERS COVER AS SHOWN -0 ONLY. REMOVE FINS, FOR 3/32 RADIAL DISTANCE ABOUT CONDUIT HOLES.
2. APPLY 28E5789-6 TO INSIDE OF COVER 28E4037-2 IF BLUEPRINT IS USED APPLY WITH COVER OVER WITH SHELLAC. PBY-5 (C. 91876) & PBY-5A (C. 88476 — # 53 & ON). — N
3. SHELLAC 28E5357 TO INSIDE OF COVER 28E4037 & COVER WITH SHELLAC ON -7 ASSY. — L
4. APPLY 28E5409 TO INSIDE OF COVER WITH SHELLAC & COVER OVER WITH SHELLAC (FOR -8 ASS'Y — Q

SUPPLIES & EQUIPMENT CLASSIFICATION			
LET	ALTERATION	DATE	BY
C	TRACED TO DATE	10-15-40	[illegible]
D	-6 ASS'Y CREATED BY ADDITIONS OF 28E4037-6 & -8 FOR PBY-5 ON 28E4038-590 & -600 ASS'Y, & FOR 28-5-ME ON 28E5558:	3-7-40	[illegible]
E	MATL OF -2 & -4 WAS .064 (NOTE 2)	8-8-40	[illegible]
E.O. 31109	ADDED NAF[4067-1, AN360-A8 & DRILL & TAP ON -2 COVER FOR -6 ASS'Y.	8-9-40	[illegible]
PBY-5 28-5ME	ADDED Q6202-5, AN320-4-7, AN365-448 & AN960-A4L TO	[illegible]	[illegible]
	FACE OF DWG. & -80 OF B/M	8-26-41	[illegible]
H	CANCELS 'G' CHANGE & ADDED P-8802-6(2), AN-320-4-7(4), AN 365-440A (4) & AN-960-A4L (4).	3-15-43	[illegible]
E.O. 38680			
PBY-5 SHIPS #43 & ON 28-5 ME SHIPS #26 & ON.			
J	ADDED (2) 7/8 WATER DRAIN HOLES	4-24-43	[illegible]
K	ADD'D R28E5789-6(1) & NOTE "SHELLAC --- SHELLAC. WT. CHG NEG	5-27-43	[illegible]
E.O. A63413 PLN 80-18			
L	CREATED -7 ASS'Y, ADDED NOTE "SHELLAC --- ASS'Y." NO WT. CHG.	1-15-43	[illegible]
E.O. A34728			
M	ON FACE CHG'D, MAT'L & SPEC FOR -2, -3 & -4, WT. CHG NEG	2-1-43	MOE
E.O. A98221			
N	NOTE: "APPLY ---53 & ON" WAS "SHELLAC --53 & ON." WT. CHG NEG	2-1-43	MOE
P	CREATED -8 ASS'Y SAME AS -7 ASS'Y EXCEPT 28E4038-4 REPLACES 28E4038-5 & 28E5409 REPLACES 28E5357. THIS CHG. AFFECTS PBY-5 & PBY-5A FOR SHIPS NOTED UNIT -6 ASS'Y FOR ALL TO 55476 INCL.	3-11-43	KAPP
Q	IN B/M ON -8 ASS'Y REMOVED 28E5789-6 ON FACE OF DWG. ADDED NOTE 4. WT. CHG NEG.	3-11-43	[illegible]

GP-GREEN PRIME

FINISH CODE	
Z	ANODIC TREATMENT
P	P-27 PRIMER
AP	ALUMINIZED PRIMER
C	CADMIUM PLATE

C# 91876 SHIPS #346 & ON
ALL PBY-5A TO C# 88476 INCL.
FOR PBY-3 SHIPS 37-66 (0878-0907)
C 91876 #21 TO #345 PKR 89-18
Δ FOR PBY-4 ALL SHIPS
C 70496 & 91876 (-90)

REQUIREMENTS PER AIRPLANE						PARTS LIST PER ASSY.	PBY-3	-5	-6	-7	-8
SYM	'MODEL'	NEXT ASSY.	REQ.	STD PARTS		PART NO.					
					LH RH		LH RH	LH RH	LH RH	LH RH	LH RH
							REQ.	REQ.	REQ.	REQ.	REQ.
						28E5409			2	2	2
						Q6202-4			4	4	4
						AN320-4-7			4	4	4
						AN365-448			4	4	4
						AN960-A4L			4	4	4
						Q3106D832	4	4	4	4	4
						NAF21/4067-1			4	4	4
						AN360-A8			4	4	4
						AN515-8-12	4	4			
						AN442AD3	12	8	8	8	8
							12	8	8	8	8
						28E1149	4	4			
						28E1165-6	1	—	—		
						28E1165-5	1	—	—		
						28E5357				1	—
						28E5357-6					1
						-8					—
						28E4038-4			1	1	2
						-6			1		
						-7				1	
						-8					1
A-E	PBY-4	28E4038-4				28E4037-2					

A.C.					
NAVY NOTED	NOTED	NOTED	NOTED	1/32	
MATERIAL	SPEC.	HEAT TREAT	FINISH	DRAFT	ENGR.

CONSOLIDATED AIRCRAFT CORP. SAN DIEGO, CALIF.

NAME: BOX — ELEC — POWER JUNCTION

OPP. HAND: NONE

SIZE G | 28E4037

R 28E4037

LET	ALTERATION	DATE	BY	LET	ALTERATION	DATE	BY

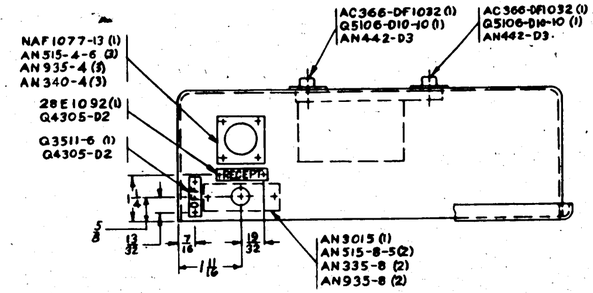

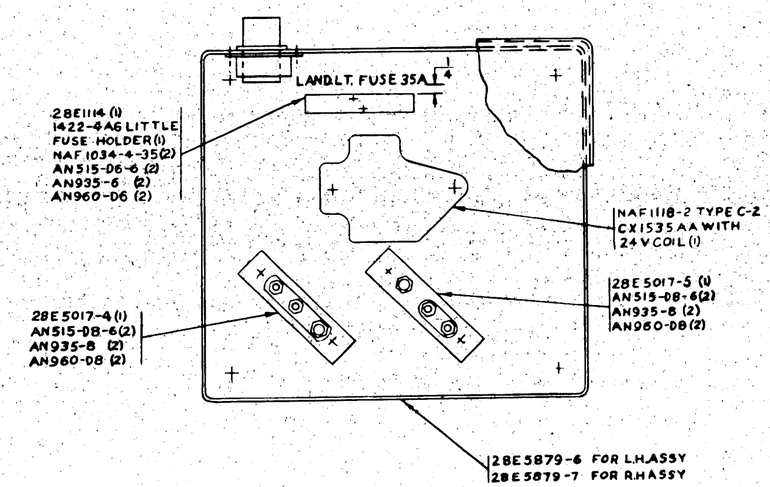

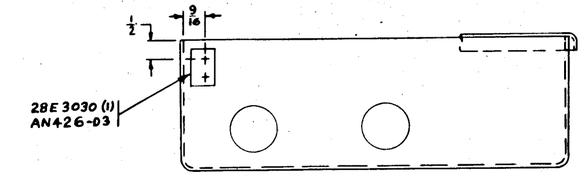

NOTES:-

1. SHELLAC, 28E5881 TO COVER OF 28E5879-6, & 28E5880 TO COVER OF 28E5879-7, & COVER WITH SHELLAC.
2. FINISH-1 PRIME, 2 GREEN PAINT, & 2 CLEAR LACQUER. DO NOT FINISH HOLES ON OUTSIDE FOR 3/32 RADIAL DISTANCE
3. SEE SHEET "1 FOR ASSYS UP TO C"NO(S)1464 THRU "2003

C"NO(S)1464 "2004 & ON

SYM	MODEL	NEXT ASSY	REQ
STAR	PBY-5A	28E4014	1
STAR	PBY-5A	28E4014	1

REQUIREMENTS PER AIRPLANE

REPLACED 3.62 LBS CALC WT

REPLACED BY ACT WT

UNLESS OTHERWISE SPECIFIED DIMENSIONS ARE IN INCHES · 1/32

SCALE 6"=1'-0"

STAMP PART NUMBER WHERE SHOWN

PART NO	STOCK	MATERIAL	SPEC	LH REQ	RH REQ	LH REQ	RH REQ	LH REQ	RH REQ	LH REQ	RH REQ
Q4305-D2											
AN442-D3											
AN426-D3											
Q5106-10-10				1	1						
Q5106-D10-10				1	1						
Q3511-6				1	1						
NAF1118-2 TYPE C-2 - CX1535AA WITH 24V COIL				1	1						
NAF1077-13				1	1						
NAF1034-4-35				2	2						
AC366-F1032				1	1						
AC366-DF1032				1	1						
AN3015				1	1						
AN960-D8				4	4						
AN960-D6				8	2						
AN935-8				6	6						
AN935-6				2	2						
AN935-4				3	3						
AN515-D8-6				4	4						
AN515-8-5				2	2						
AN515-D4-6				3	3						
AN365-D4				3	3						
AN340-D4				3	3						
AN335-8				2	2						
1422-4AG	LITTLE FUSE	HOLDER		1	1						
28E5881				1	1						
28E5880				1	1						
28E5017-5				1	1						
28E5017-4				1	1						
28E3030				1	1						
28E1114				1	1						
28E1092				1	1						
28E5879-7				1	1						
28E5879-6				1	1						

PARTS LIST PER ASSY. -574 -2 -3 -4 -5

A C		MEMBER BOM				
NAVY NONE	NOTED	10-7-43				
HEAT TREAT	FINISH	DRAFT	CHECK	STRUCT	MAT	APPROV	ENG.

NAME BOX ASSY.-ELEC.- ENG. TERMINAL JUNCTION

CONSOLIDATED AIRCRAFT CORP. SAN DIEGO, CALIF.

OPP HAND

DWG G SIZE

28E4047 SHEET "2 OF 2

28E4047

R

SUPPLIES & EQUIPMENT-CLASSIFICATION				
	LET	ALTERATION	DATE	BY
	C	FORGED	8-8-39	
E.O. 32658	D	AN 526-8-14(6) WAS AN 515-8-12(6)	1-22-41	LITTLE
E.O. 4-28638	E	CREATED - 2 ASSY (NO WT. CHG.)	4-3-42	WHITE
E.O. A50718	F	ON REQ/AIRPLANE -2 ASSY		
		REPLACES -0 ON 28-5AMN		
		N.A. 28E5702(1). NO WT. CHG.	7-29-41	
E.O. A61549	G	ERT REQMTS PER SHIP TO		-
		DATE. (NO WT. CHG.)	8-13-42	
E.O. A46128	H	QS0SS-S8-14 WAS AN515-8-14		
		TINNERMAN "TTS-M-1 CAC NU 112		
		WAS AN 565-832 WT. CHG. NEG.	10-12-42	
E.O. A54027	J	-4 ASSY REPLACES -2 FOR		
		PBY-5A "53 ON & 28-5AMN		
		NO WT. CHG.	10-12-42	

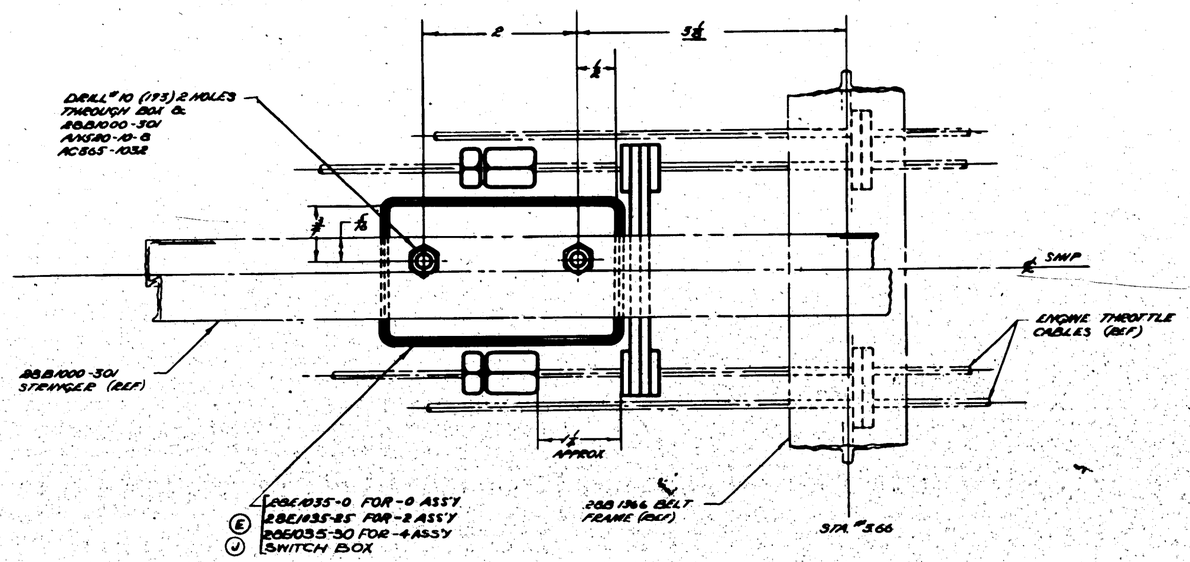

PLAN VIEW

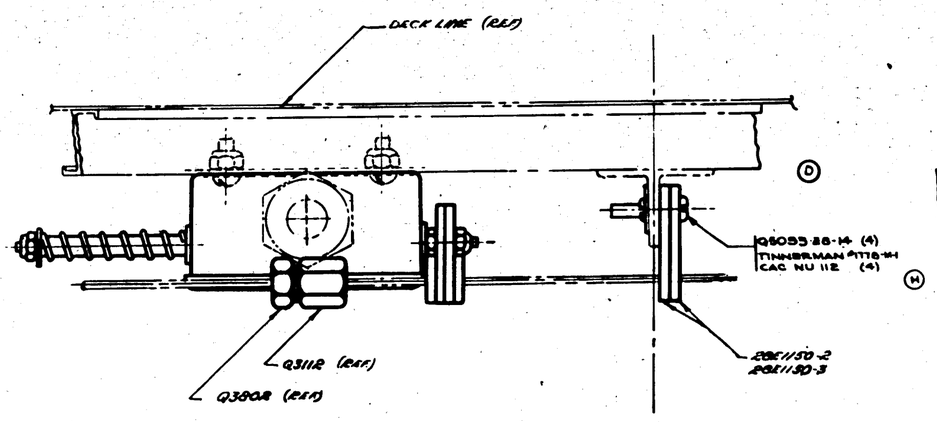

FORWARD

SIDE VIEW

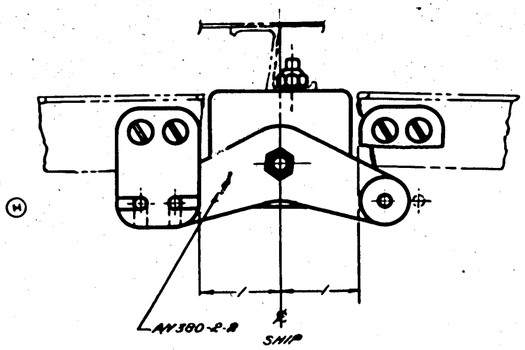

VIEW FORWARD

NOTES

LOCATE STOPS AT TIME ENGINE IS RUN IN.

TO GET CROSS HEAD ON CABLES LOOSEN STOP NUT ON CROSSHEAD END OF ROD & ROTATE ARMS WITH BUSHING IN PLACE. TIGHTEN NUT & INSTALL COTTER PIN.

C. 88476-"53 ON	-4	PBY-5A	28E1012	1											
C. 91876 "54 ON	-2	PBY-5	28E1012	1											
	-4	28-5AMN	28E5702	1											
	-0	28-5AMC	28E5702	1											
	-0	28-5 MR	28E5702	1											
	-0	28-5 ME	28E5576	.	QS0SS-S8-14	4	4	4							
	-0	28-5 MC	28E5702	1	TINNERMAN "TTS-M-1 CAC NU 112	4	4	4							
	-0	28-5MA	28E5576	1	AN 520-10-6	R	2	R	28B1058-30						
	-0	PBY-5A	28E1012	1					28B1059-25						1
C. 10486, 77713, 88476 "1-52	-2	PBY-5A	28E4044	1	AN 520-8-8	1	1	1	28B1160-3	2	R				
C. 10486 & 81876 - "1-"90	-0	PBY-5	28E1012	1	" "	R	2	R	28B1160-2	A	R				
	-0	PBY-5	28E1012	1					28B1035-0	J					
										-0	-0	-4		-0	-0
	O.H.	MODEL	NEXT ASSY	REQ	ST'D PARTS	REQ			PART NO		REQ				

REPLACES 28E1012-0 ON PBY-5A

REPLACED BY

LIMIT OR DIMENSIONS UNLESS OTHERWISE SPECIFIED ± —

E.C.O. 4-24-39 APPROVED DATE

99 SCALE WT. NET WT.

SCALE AS "=1'-0"

REQUIREMENTS FOR AIRPLANE | MAT. | PARTS LIST PER ASSY

AC							
NAVY NONE	NONE	NONE	NONE	1/4 THICK	10 "CAB		
MATERIAL	SPEC.	HEAT TREAT	FINISH	1-10-39	10-1-42	DRAFT	R
				DRAFT	CHECK	ISSR	ENG

CONSOLIDATED AIRCRAFT CORP. BUFFALO, N.Y.

STAMP PT. NO. WHERE SHOWN

NAME SWITCH INSTALLATION - ELEC. - THROTTLE WARNING

OPP HAND

SIZE G DWG 28E4049

R

64-4702

LET	ALTERATION	DATE	BY	LET	ALTERATION	DATE	BY
C	REVISED & REDRAWN: REMOVED WIRE NOS. 28, 30 & 138 ADDED NO. 442 & 443, REPLACED WIRE AS SHOWN WITH DASH-2 ADDED NOTE NO. 5 REMOVED NOTES FROM TERMINALS IN 28E5128 JUNC. BOX	5-2-61	JFR				

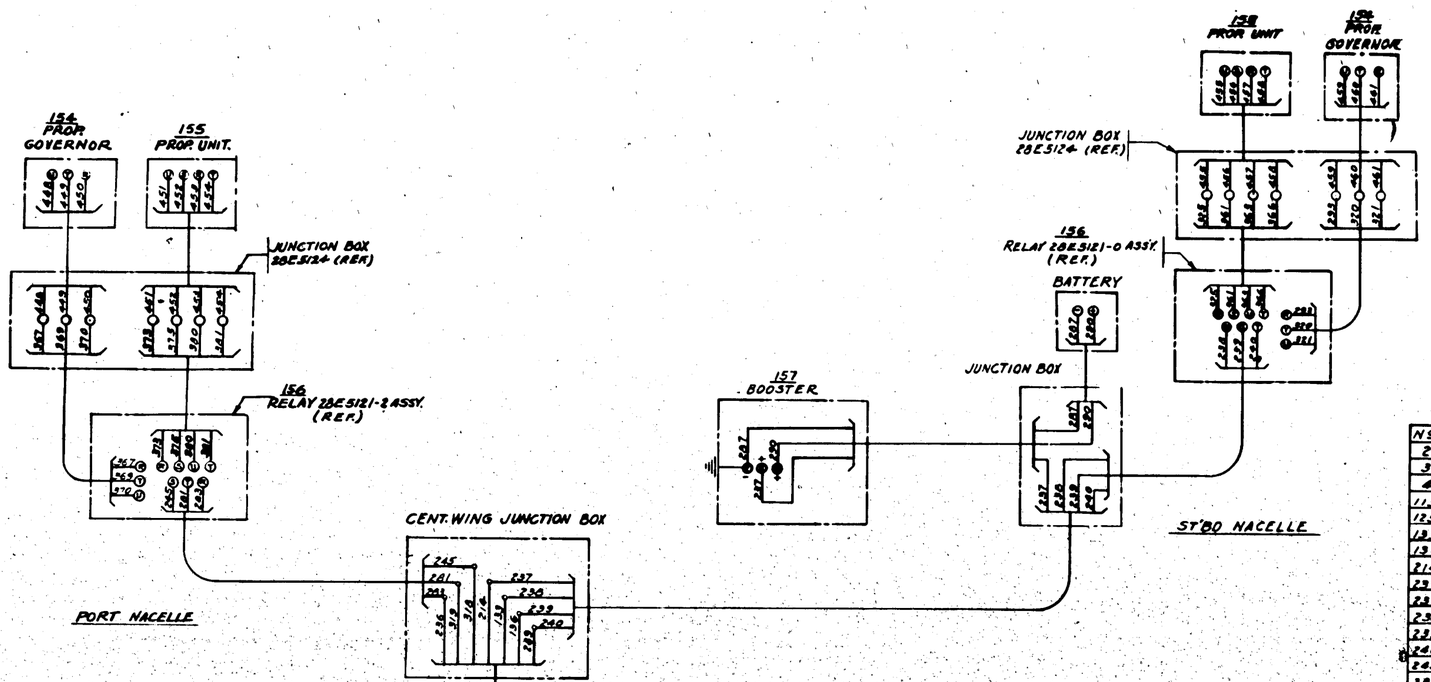

WIRE TABLE

NO	SIZE	FT.	IN.	NO	SIZE	FT	IN
2	A-14		6	373	A-10	6	
3	A-14		6	375	A-10	6	
4	A-14		6	380	A-10	6	
113	A-14		6	381	A-10	6	
125	A-14		6	382	A-14	22	
133	A-14	13		383	A-14	22	
136	A-14	13		388	A-14	22	
214	A-8	13		389	A-8	21	
236	A-14	13		410	A-14	22	
237	A-8	6		420	A-14	22	
238	A-14	10		421	A-14	22	
239	A-14	10		422	A-8	5	
240	A-14	10					
245	A-14	11					
281	A-14	11					
283	A-14	11					
287	A-2	35		440	A-10	7	
289	A-14	13		449	A-10	7	
290	A-2	40		450	A-10	7	
293	A-10	6		451	A-10	6	
317	A-8	21		452	A-10	6	
318	A-14	13		453	A-10	6	
319	A-14	13		454	A-10	6	
320	A-10	6		456	A-10	6	
321	A-10	6		456	A-10	6	
325	A-10	6		457	A-10	6	
361	A-10	6		458	A-10	6	
363	A-10	6		459	A-10	7	
366	A-10	6		460	A-10	7	
367	A-10	6		461	A-10	7	
368	A-10	6		462	A-14		6
370	A-10	6		463	A-14		6

GOV'T. FURNISHED MATERIAL

NO	ITEM	DWG.	MFGR.	R.Q.
151	SELECTOR SWITCH	88936	CURTISS-WRIGHT CORP.	2
152	FEATHERING SW.	104029	CURTISS PROPELLER DIV.	2
153	SAFETY SWITCH	100602	CLIFTON, NEW JERSEY	2
154	GOVERNOR	102400		2
155	PROP ASSEMBLY	103003		2
156	RELAY	102919	(28E5121-REF.)	2
157	BOOSTER	104035		1

NOTES:
1. DETERMINE ACTUAL WIRE LENGTHS ON FIRST INSTALLATION & NOTIFY ENGINEERING DEPT.
2. LETTERS AT EQUIPMENT TERMINALS ARE ACTUAL MARKINGS ON EQUIPMENT.
3. THIS IS NOT A CONSTRUCTION DRAWING
4. FURNISH ONE COPY OF THIS DIAGRAM WITH EACH SHIP EFFECTIVE ON (NOTED BELOW)
5. (C) WIRES ON 28E 2000 REQ'D BY NAM. STD. PROP INSTLN ARE DELETED ON SHIPS USING CURTISS-WRIGHT PROPS.

NOTE:- SHIPS ARE AS FOLLOWS:
128, 130, 131, 133, 136, 138, 139, 140, 142 — BU. #2347 TO 2355 INCL.
*245-248 INCL.-BU. #2422 TO 2427 INCL.

PART NO	STOCK	MATERIAL	SPEC.	LH REQ.	RH REQ.	LH REQ.	RH REQ.	LH REQ.	RH REQ.	LH REQ.	RH REQ.
-4	WIRE AS SHOWN		M-3934								
PARTS LIST PER ASSY.				-0		-2		-3		-4	-5

A C		6-2-41	5-2-44		J.F.R.	
NAVY —						
HEAT TREAT	FINISH	DRAFT	CHECK	STRUCT	DAY	ENGR

NAME: WIRING DIAGRAM - ELEC. CURTISS-WRIGHT ELEC. PROPS.

CONSOLIDATED AIRCRAFT CORP. SAN DIEGO, CALIF.

OPP. HAND — DWG. G — 28E4524

LET	ALTERATION	DATE	BY	LET	ALTERATION	DATE	BY

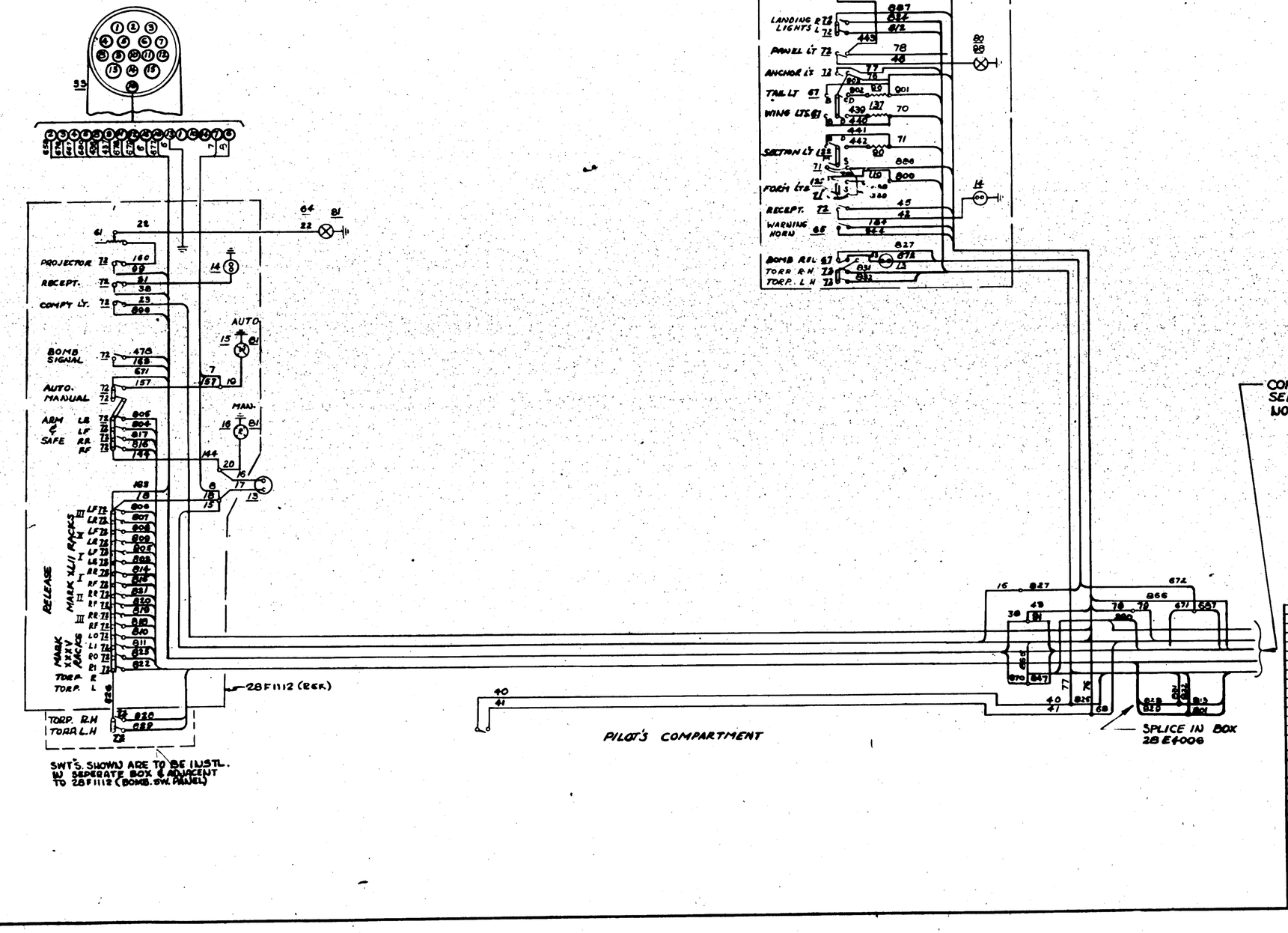

NOTE: WIRES INDICATED BY HEAVY LINES ARE FOR THE TORP-RELEASE & WILL APPLY ON PBY-5 SHIPS NO'S. 6-8-10-12-13-14-15 ONLY.
THE ABOVE NOTED SHIPS ARE ON THE DIVERSION ORDER W.O. 331.
DWG. SHOWS SUGGESTED CHG. WHICH MAY BE MADE IN ORDER THAT THE BOMBER MAY RELEASE THE BOMBS FROM BOMBER'S COMPARTMENT.

DIVERTED PBY-5s USE 6, 8, 10, 12, 13, 14 & 15 INCL.

Notes 28E8050 1

ASSY DASH NO.	MODEL	NEXT ASSY	DWG.
REQUIREMENTS PER AIRPLANE			
REPLACED			7-1 CHG. NOT.
REPLACED BY			ACT. QTY.
Limit on Dimensions Unless Otherwise Specified	SCALE		
STAMP PART NUMBER WHERE SHOWN			

PART No	STOCK	MATERIAL	SPEC	LH RH REQ.	LH RH REQ.	LH RH REQ.	LH RH REQ.	LH RH REQ.
PARTS LIST PER ASSY.				-0	-2	-3	-4	-5
832	18	10	MS93A					
831	18	10						
828	18	8						
858	18	8						
860	18	1						
WIRE DT	Geek A	LEN. FT						

AC		DRAWN	Rooker		
NAVY		CHECK	12-8-44		
HEAT TREAT	FINISH	STRUCT			
		DRAFT		APPROV	

NAME WIRING DIAGRAM ELECT-TORP RELEASE

CONSOLIDATED AIRCRAFT CORP. San Diego, Calif.

OPP HAND | DWG. G | SIZE | 28E5000 | SHEET FOR REVISIONS

E.O. 33455

LET	ALTERATION	DATE	BY	LET	ALTERATION	DATE	BY
A	IN 28A1068-ESTO REC WIRE NR 635 WAS 633, 633 WAS 634, 634 WAS 635						
B	REMOVED WIRES NR 711, 712, 713 & 714						
	REMOVED WIRES NR 538, 539 & 598 F						
	539 FROM PLUG E34 TO REC F						
	RE-ROUTED TO SWITCH REPLACING WIRES NR 711, 712, 713 & 714.						
	REPLACED NU-COR SHIELDED #18 WIRE WITH NR 20 ANC. FOR WIRES NR 538, 539, 530 & 591						
	REMOVED GROUNDING WIRE						
	EFF. ON ALL SHIPS AS NOTED	4-2-41	MA				
C	CHANGED WIRE NOS. "584" TO "711, 585" "712" "530" TO "713, "587" TO "714, "592" TO "586" "533" "537," "534" TO "536" & "535" TO "538"						
	ADDED E&B INT. & NOTE #4	6-10-41	MA				
D	CHNGD. WIRE "597 TO "542	10-2-41	MA				

E.O. 41868-3

WIRE TABLE		
NO.	GAGE	LNGTH
11	20	15'
711	20	2
712	20	2
713	20	2
714	20	2
236	20	3
237	20	3
238	14	15
239	14	1
536	20	9
537	14	9
538	18	6
539	20	15
540	20	2
541	20	1
542	14	6
543	16	6
544	20	4
545	20	4
607	20	15
608	20	9
609	16	15
673	12	17
586	20	2½
587	20	2½
548	18	3½

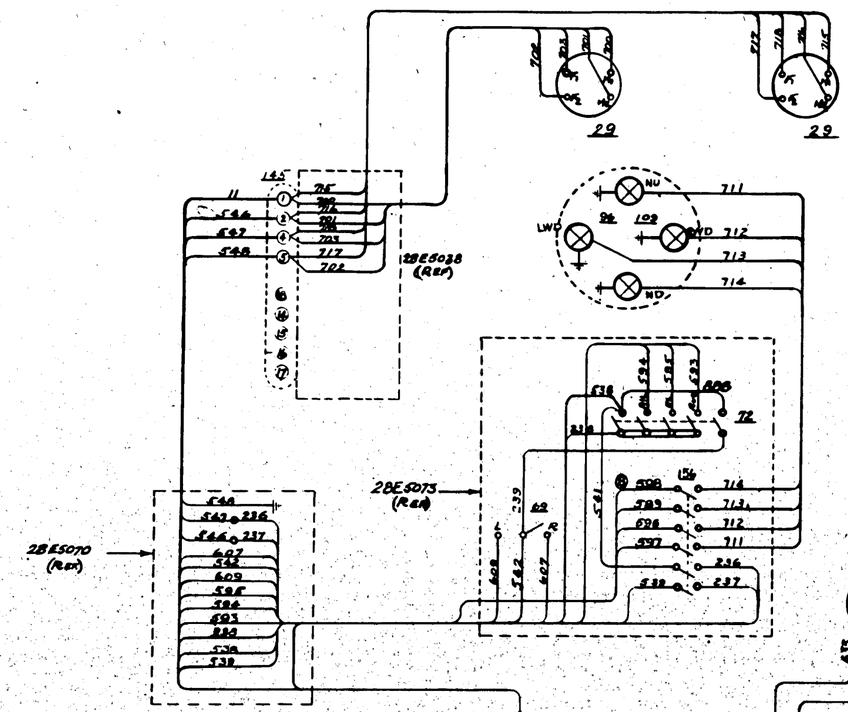

NOTES:
(1) FOR DESCRIPTION OF EQUIPMENT NO'S REFER TO SHEET ONE. (SEE NOTE #4)
(2) WIRE NO'S. NOT SHOWN ON WIRE TABLE ABOVE MAY BE FOUND ON SHEET ONE
(3) THIS DIAGRAM FOR INST. ON SHIPS NO'S 98 TO 200 (SER. NO'S 2386 TO 2488) AND FOR REWIRING SHIPS NO'S 1 TO 97 (SER. NO'S 2289 TO 2385), PER S.O. 936-41.
(4) EQ. # 135 = SWITCH 6 POLE S.T. CUTLER HAMMER MFG. CO. MILWAUKEE WIS. NAF 1090

ATTACH SHEET #3 TO SHEET #1

SEE NOTE	P3Y-1	28E5000	1
ASSY. DASH NO.	MODEL	NEXT ASSY.	REQ.

REQUIREMENTS PER AIRPLANE

REPLACES — CALC. WT.

REPLACED BY — ACT. WT.

LIST OF SECONDARY STRUCTURE SHOWING — SCALE

STAMP PART NUMBER WHERE SHOWN

WIRES PER SPEC. M-395A EXCEPT AS NOTED IN WIRE TABLE

-6

PART NO	STOCK	MATERIAL	SPEC	LH REQ	RH REQ	LH REQ	RH REQ	LH REQ	RH REQ	LH REQ	RH REQ
PARTS LIST PER ASSY				-0	-2	-3	-4	-5			

AC

NAVY None — HEAT TREAT

None — FINISH

12-19-40 — DRAFT

CHECK — STRUCT — MAT — APPROV — ENG

NAME WIRING DIAGRAM - ELEC. - A.F.C. EQUIPMENT

OPP HAND No

CONSOLIDATED AIRCRAFT CORP. SAN DIEGO, CALIF.

DWG G — SIZE

28E5000 SHEET 3 OF 4

LET	ALTERATION	DATE	BY
D	ADDED TO FACE WIRE 481 & 482 & SPLICE IN 28E5113 BOX. FUSE ADDED TO MOP & PARTS LIST. EQUIP. No. 187 75A FUSE CHANGED TO 100A #1402	10-3-41	

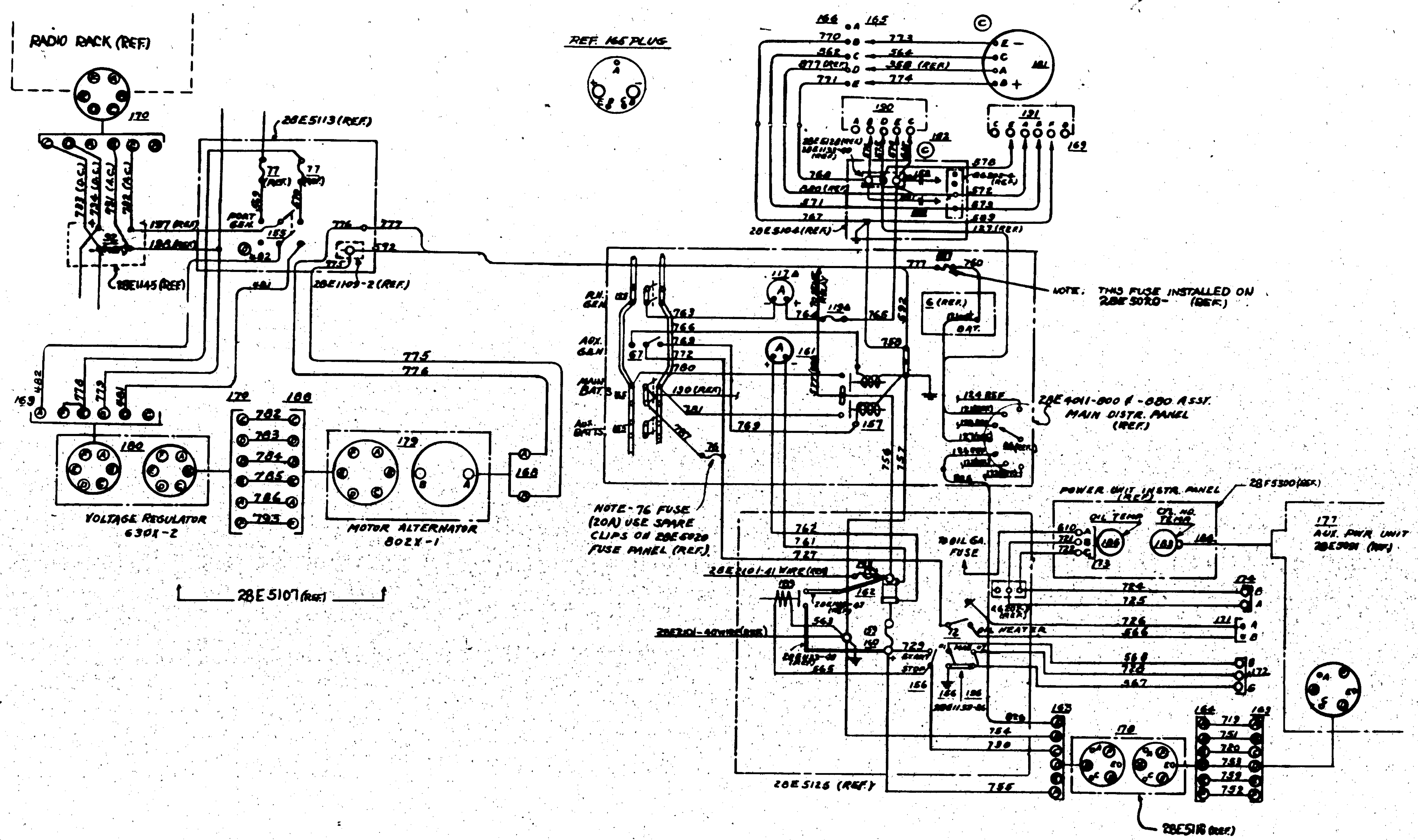

EQUIP. ADDED TO GOV'T. FURN. EQUIP. LIST ON DWG. 28E5000

EQ. NO.	DESCRIPTION	MANUFACTURER	TYPE	DRAWING	REQ
177	AUX. PWR. UNIT.	LAWRENCE ENG. CO.			1
178	VOLT. CONT. UNIT	WITH AUX. PWR. UNIT			1
179	MOTOR ALTERNATOR	ECLIPSE			1
180	MOTOR ALT. CONT. UNIT	WITH MOTOR ALT.			1
181	GEN. 100A - 24V	G. E. CO			1
182					
183	CYL. HD TEMP. INDIC.	WITH AUX. PR. UNIT			1
184	THERM. PLUG & CABLE ASY.	" " "			1 EA
186	OIL TEMP. INDIC.	" " "			1
190	REV. CURRENT RELAY	G. E. Co.			1
191	VOLTAGE REG.	" "			1

EQUIP. ADDED TO CONTRACTOR FURN. EQUIP. LIST ON DWG 28E5000

EQUIP. NO.	DESCRIPTION	MANUFACTURER	TYPE	DRAWING	REQ
72	SWITCH S.P.D.T.	CUTLER HAMMER MFG. CO.	B5A	AN3015	1
76	FUSE 20 A			NAF1034-4-20	1
155	SWITCH D.P.D.T.	CUTLER HAMMER MFG. CO.	C9A	NAF310584	4
156	SW. S.P.S.T. TOGGLE		B-6B	AN3016	3
157	RELAY-175A-24V.	G. E. Co. SCHNECTADY, N.Y.	GTR70A2		1
158	CAPACITOR .5 MFD.		A	AC50131	2
159	FUSE RETAINER	LITTEL FUSE CORP.	150-3006	NAF1035-9A	1
160	FUSE 225 AMP	" " "	1236-225		2
161	AMMETER	WESTON INST. CORP. NEWARK N.J.		NAF1091-C-240	1
162	SHUNT	WITH AMMETER		WITH REMOTE SHUNT	1
163	PLUG	CANNON DEV. CO. L.A. CAL.		AN3108-36-3S	2
164	"	" " " "		AN3106-36-3P	1
165	"	" " " "		AN3106-32-1P	1
166	RECEPTACLE	" " " "		AN3102-32-1S	1
168	"	" " " "		AN3106-22-1S	1
169	"	" " " "		AN3106-22-5P	2
170	"	" " " "		AN3108-22-5S	2
171	"	" " " "		AN3106-12S-3S	1
172	"	" " " "		AN3106-18-2P	1
173	"	" " " "		AN3106-12S-3S	1
174	"	" " " "		AN3106-18-3S	1
187	FUSE 100 A	LITTEL FUSE CORP.		# 1402	1
188	PLUG	CANNON DEV. CO. L.A. CAL.		AN3108-22-5P	1
189	RELAY	G.E. CO. SCHNECTADY NY	GTR70B1		1
192	RECEPTACLE	CANNON DEV. Co. L.A. CAL.		AN3106-28-5P	1
193	FUSE 50 A	LITTELFUSE CORP.		NAF1034-6-50	1
194	FUSE RETAINER	" "	40-150A	NAF1034-6A	1

FOR THIS POWER UNIT INSTALLATION REMOVE THE FOLLOWING WIRES & EQUIPMENT AS LISTED ON 28E5000, SHEET #1:

WIRE NOS. 82, 131, 132, 134, 135, 181, 186, 190, 193, 194, 195, 196, 204, 218, 219, 220, 221, 161, 162, 326, 327, 359, 360, 362, 526, 527, 878, 879, 881, 882, 945, 946, 947, 948, 926, 927, 577

EQUIP. NOS. *1 (1), *2 (1), *5 (1), *11 (1), 87 (1), 115 (2), 116 (1), 118 (1), *121 (1), 136 (1) & 28E1213 (1) 67 (3)

ADD THE FOLLOWING WIRES:

WIRE NO.	GAGE NO.	LENGTH FT.	WIRE NO.	GAGE	LENGTH FT.	WIRE NO.	GAGE	LENGTH FT.	WIRE NO.	GAGE	LENGTH FT.	WIRE NO.	GAGE	LENGTH FT.
590	16	4	562	16	6	719	12	4	753	0	6	771	2	6
591	16	4	563	16	1	720	12	4	754	0	3	772	16	3
592	6	3	564	16	3	721	20	2	755	0	3	773	2	3
610	20	6	565	16	1	722	20	2	756	0	4	774	2	4
615	18	2	566	14	4	724	20	4	757	0	4	775	6	5
481	16	5	567	16	4	725	20	4	758	2	1	776	6	6
482	16	5	568	16	4	726	14	4	759	12	4	777	6	2
			569	14	1	727	14	4	761	20	7	778	14	6
			570	14	1	728	16	4	762	20	7	779	14	6
			571	16	3	729	16	2	763	2	1	780	2	3
			572	16	6	730	16	4	764	2	3	781	2	3
			573	16	6	731	16	3	765	2	2	782	20	3
			574	2	6	732	16	3	766	16	3	783	20	3
			575	16	6	733	12	3	767	2	3	784	14	3
			576	2	6	734	12	3	768	2	3	785	14	3
			577	4	5	751	0	6	769	16	3	786	20	2
			578	16	6	752	0	6	770	2	6	787	14	4
			589	16	6	760	6	2	[illegible]	20	3	[illegible]	20	8

EQUIP. MARKED * IS G.F.E.

EQUIP. MARKED "Δ" ARE LISTED ON DWG. 28E5000, SH. #1, BUT HAVE BEEN RELOCATED

CONTR. #70406 CHANGES ON #R400-2455 INCL.

RUSH RELEASED 6/4/41

RUSH RELEASED 6/28/41

9/29/41 "C"

ASSY. DASH NO.	MODEL	NEXT ASSY.	REQ.
	PBY-5	28E5050	1

REQUIREMENTS PER AIRPLANE

REPLACES | CALC. WT.

REPLACED BY | ACT. WT.

SCALE

STAMP PART NUMBER WHERE SHOWN

PART No	STOCK	MATERIAL	SPEC.	LH RH REQ.	LH RH REQ.	LH RH REQ.	LH RH REQ.	LH RH REQ.
	WIRE AS NOTED		M-393-A					
-6								
PARTS LIST PER ASSY.				-0	-2	-3	-4	-5

AC | NAVY | HEAT TREAT | FINISH

DRAFT 5/29/41 | CHECK 6/4/41 | STRESS | MAT | APPRV | ENG.

NAME: WIRING DIAGRAM ELECT. SYSTEM

OPP. HAND NONE

SIZE G | DWG. 28E5000 SHEET 4 OF 5

CONSOLIDATED AIRCRAFT CORP. SAN DIEGO, CALIF.

LET	ALTERATION	DATE	BY	LET	ALTERATION	DATE	BY
A	REDRAWN & RELOCATED 28E5002	[illegible]	[illegible]				
·	ADDED -35 & CHANGED 28E5074-8						
	ASS'Y TO -2 ASS'Y						
B	3¼ DIM. WAS 3 - NO WT. CHG.	4-3-42	[illegible]				
C	28E5074-8 WAS 28E5074-2						
	NEG WT CHG	7-2-42	[illegible]				
D	NEXT ASSY 28E5663 WAS						
	28B106-860 FOR -2 ASSY						
	(PBY-5A) NO WT. CHG.	4-9-43	[illegible]				

E.O. A24104

E.O. A 38971 —

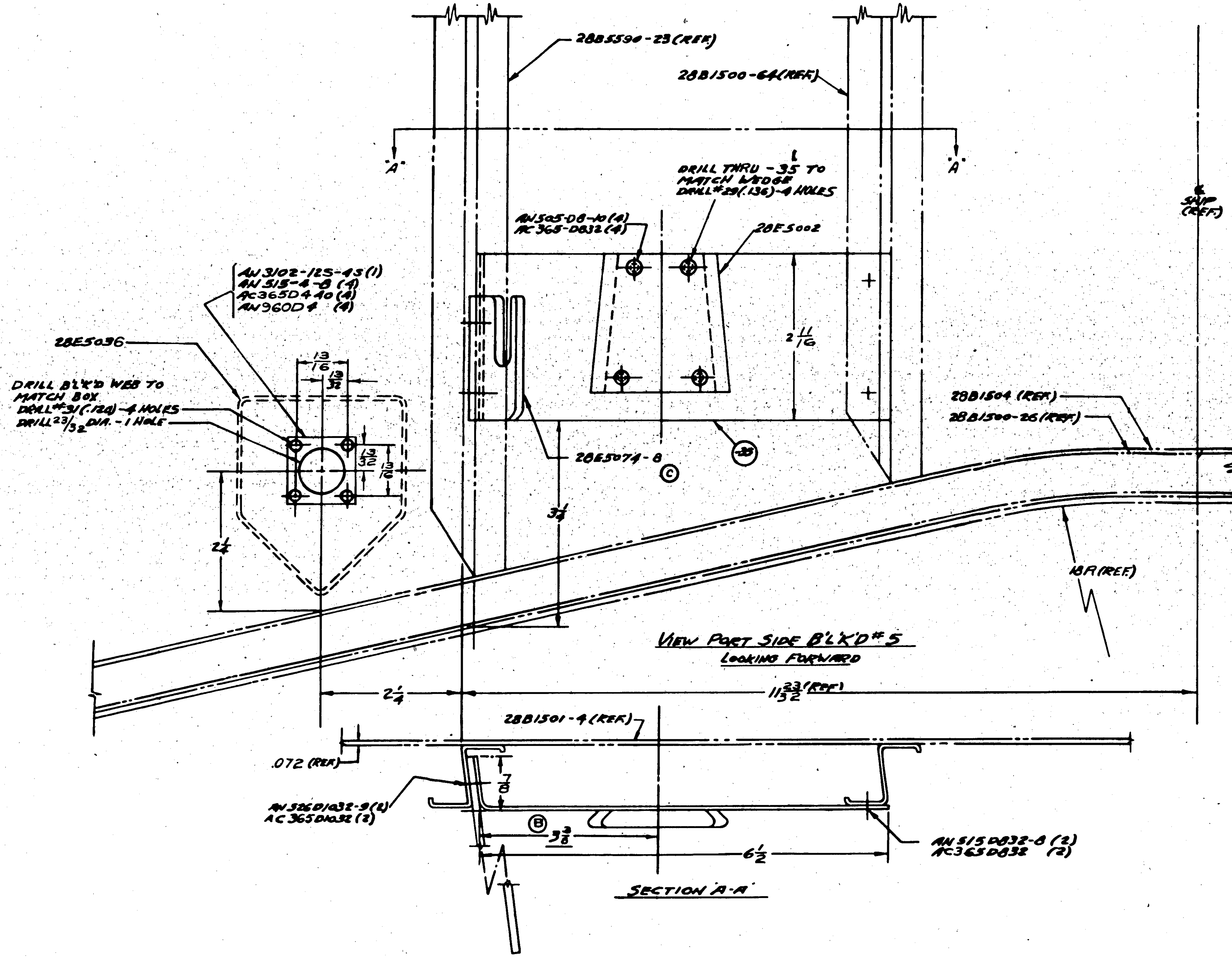

PART No	STOCK	MATERIAL	SPEC.	-0 REQ.	-2 REQ.	-3 REQ.	-4 REQ.	-5 REQ.
AN3102-12S-4S					1			
AN960D4					4			
AN526D1032-9					2			
AN515D832-8					2			
AN515-4-8					4			
AN505-D8-10					4			
AC365D440					4			
AC365D832					6			
AC365D1032					2			
28E5074-8					1			
28E5036					1			
28E5002					1			
28E5007-35					1			

PARTS LIST PER ASSY.

	ASSY DASH NO.	MODEL	NEXT ASSY	REQ.
	-2	28-5AMN	28E5663	1
	-2	28-5AME	28E5663	1
ALL	-2	PBY-5A	28E5663	1

REQUIREMENTS PER AIRPLANE

REPLACES: · CALC. WT. .74

REPLACED BY: ACT. WT.

LIMITS: ± 1/32 SCALE 12" = 1'0"

STAMP PART NUMBER WHERE SHOWN

A C

NAVY NONE

HEAT TREAT — FINISH —

DRAFT · CHECK · STRUCT · MAT. · APPROV · ENG.

NAME INSTALLATION - ELECTRIC WARNING HORN - INBOARD

CONSOLIDATED AIRCRAFT CORP. SAN DIEGO, CALIF.

OPP. HAND

DWG. SIZE G

28E5007 SHEET #2 OF 2

28E5007 R

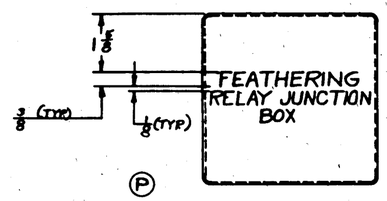

STENCIL IN 3/8" BLACK BLOCK LETTERS ON BOX COVER.
SCALE 6"=1'0"

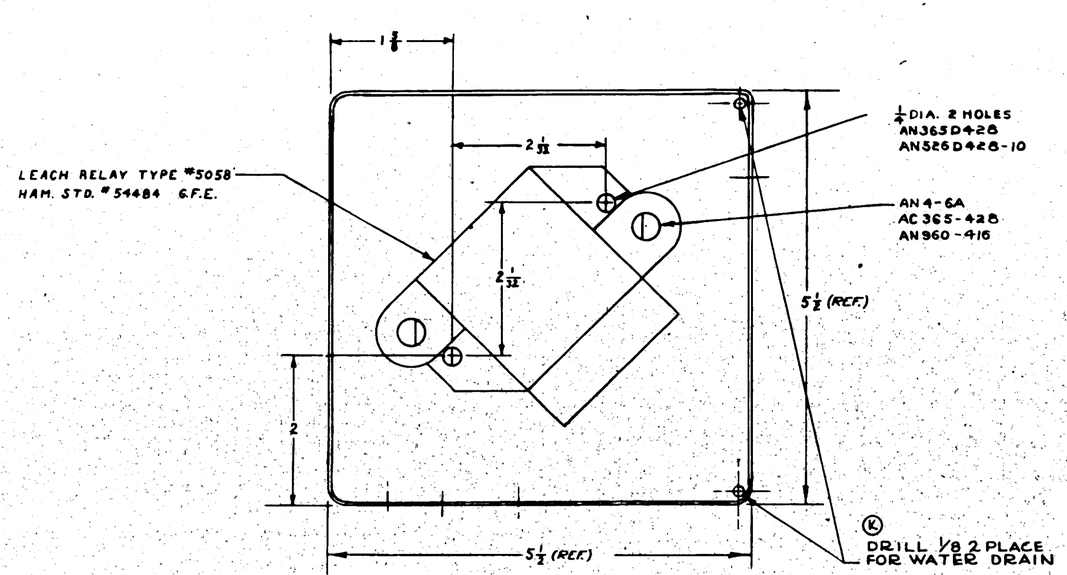

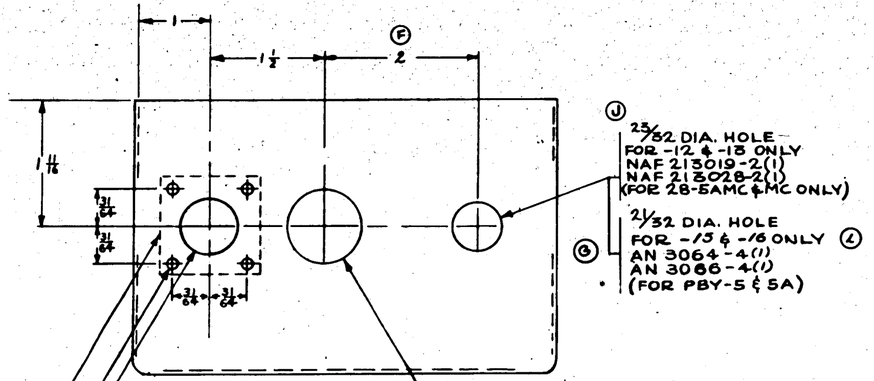

COVER OMITTED IN TWO VIEWS ABOVE

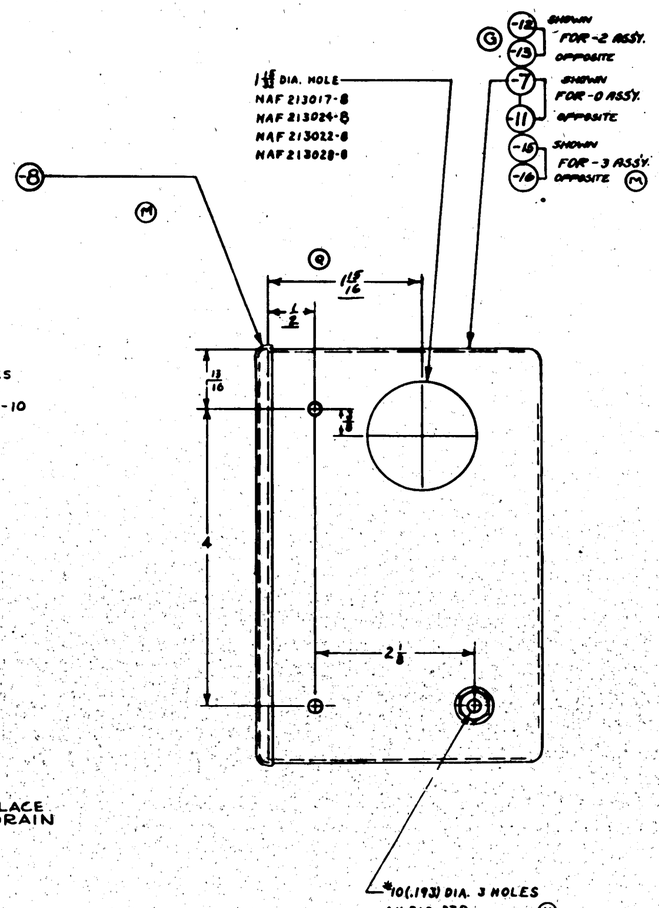

LET	ALTERATION	DATE	BY
D	REDRAWN TO CONFORM WITH INITIAL REQ. OF SHIPS COMPLETING AS OF THIS DATE. THIS DWG.	2-6-42	
	INCORPORATES ALL E.O.'S WRITTEN AGAINST SPECIFICATION SIZE AND TOOLING OF -6 & -8 PARTS NOT AFFECT BUT LOCATION AND SIZE OF HOLES ARE AFFECTED IN ALL PARTS		
E	AN346D632-10 WAS AN526D632-8	4-27-42	Adams
F	DIM. 3/4 WAS 31/32	5-27-42	Adams
G	CREATED -2 ASS'Y SAME AS -0 EXCEPT -12 REPLACES -7 & -13 REPLACES -11, ADDED AN3064-4T AN3086-4 OR 5/64 FOR -2 ASS'Y. ADDED -18 & -13 TO FACE & 21/32 HOLE FOR -12 & -13 ONLY	7-14-42	HOW
H	AN315-D3R REPLACES AN315D1032	8-8-42	SECURITY
J	ADDED 23/32 DIA HOLE WAS 31/32 FOR -12 & -18 ONLY, NAF 213019		
	2(1) WAS AN3064-4, & NAF 213028-2(1)		
	2(1) WAS AN3064-4 FOR 28-5AMC & MC ONLY (NEG. WT. CHG	8-8-42	
K	ADDED (2) 1/8 WATER DRAIN HOLES (NEG. WT. CHG.	"	"
L	ADDED -3 & -5 ASS'YS. 21/32 DIA HOLE (FOR -13 & -16 ONLY) WAS (FOR -12 & -13 ONLY) (NO WT. CHG.)		
M	REPLACED FOR -6, -8 & -10 "ALCLAD 24ST SPEC 47A8 COND. A H.T. SR -53" IN 0/H WITH WORD "NOTED" & MATERIAL NOTE "-6, -8 & -10 ---HT. NONE." CHG'D GAUGE OF MAT. FROM .040 TO .064 WT. CHG. NEG.	12-19-42	
N	REMOVED -6-10 & -9 IN PARTS LIST PER ASS'Y FOR -7, -11, -12, -13 -15 & -16 "MAKE FROM CAC COVER"		
P	ADDED VIEW FOR STENCILING (NEG WT CHG)	8-13-43	BERNER
Q	DIRECTIONS NO WT. CHG. DIM. 1 15/16 WAS 2 1/16 & 1/2 WAS 5/8 WT. CHG. NEG.	8-6-43 / 10-4-43	WRIGHT / MURILLO

E.O.#16439 " 20858 " 21501A " 21700 " 22938A

E.O. 26391-PBY-5

E.O. A10782 20-5 AMC 20-5 MC

E.O.#AIB217

C. NO. AN 464 C-7771-3 C-88476 C-91876

C-70498

NOTE: FINISH -7, -8, -11, -12, -13, -15 & -16 IP-1 GP AFTER ASSY. OUTSIDE ONLY. NO FINISH 1/32 RADIAL DISTANCE AROUND CONDUIT HOLES.

NOTE: CAC BOX (COVER #38-329 MAY BE PURCHASED FROM POULSEN & MARDON LOS ANGELES, CALIF. P/N #214-324 OR EQUIV. (214-1)

28E5014 ASS'Y USED ON SHIPS 1 TO 13 INCL., 26 TO 160 INCL., 164 & ABOVE.

MODEL	PRINT ASSY	NO.
28E5014	OR 11-16-37	2.85

SCALE	
1/32	12"=1'0"

PART NO.	STOCK	MATERIAL	SPEC	LIT. DIV. REQ. -0	LIT. DIV. REQ. -2	LIT. DIV. REQ. -3	LIT. DIV. REQ. -4	LIT. DIV. REQ. -5
-6	MAKE FROM CAC	BOX #38-329	WITH COVER #38-329					
-5	MAKE FROM CAC	BOX #38-329	MARK #5928					
NAF 213028-2	(FOR 28-5AMC & MC ONLY)							
NAF 213019-2	(FOR 28-5AMC & MC ONLY)							
AN 3064-4	(FOR PBY-5 & 5A ONLY)							
AN 3086-4	(FOR PBY-5 & 5A ONLY)							
-13	MAKE FROM CAC	BOX #38-329	WITH COVER #38-329 MARK #5928					
-12	MAKE FROM CAC	BOX #38-329	WITH COVER #38-329 MARK #5928					
AN 4-6A				3	3	3	3	3
AN 365-428				4	4	4	4	4
AN 960-416				4	4	4	4	4
WK 325L	LEACH RELAY							
-12	PBY-5A	28E5030	1	WK-4-325L				
-3L	PBY-5A	28E5030	1	NAF 213028-8				
-3R	PBY-5	28E5030	1	213028-8				
-3L	PBY-5	28E5030	1	213028-8				
-2R	28-5AMC	28E5030	1	213019-8				
-2L	28-5AMC	28E5030	1	213019-8				
-2R	28-5MC	28E5030	1	213017-8				
-2L	28-5MC	28E5030	1	213017-8				
-0R	28-5MN	28E5030	1	NAF 213017-8				
-0L	28-5MN	28E5030	1					
-0R	28-5ME	28E5030	1					
-0L	28-5ME	28E5030	1	AN960D10	3	3	3	3	3
-0R	28-5MA	28E5030	1	AN526D428-10	3	3	3	3	3
-0L	28-5MA	28E5030	1	AN526D1032-10	3	3	3	3	3
-0R	28-5AMN	28E5030	1						
-0L	28-5AMN	28E5030	1	AN365D632	4	4	4	4	4
-0R	PBY-5A	28E5030	1						
-0L	PBY-5A	28E5030	1	AN315D632	2	2	2	2	2
-0R	PBY-5	28E5030	1	AN526D632	4	4	4	4	4
-0L	PBY-5	28E5030	1	AN 315-D3R	3	3	3	3	3
-11	MAKE FROM CAC	BOX #38-329	WITH COVER #38-329 MARK #5928					
-9	MAKE FROM CAC	COVER #38-329	WITH BOX #38-329 MARK #5928					
-7	MAKE FROM CAC	BOX #38-329	WITH COVER #38-329 MARK #5928					
-8								

PARTS LIST PER ASSY. -0 -2 -3 -4 -5

AR				
FINAL FINISH NOTED	NOTED	9-6-40	9/16/40	9/16/40
	FINISH	DRAFT	DESIGN	STRESS

NAME BOX ASS'Y-ELEC-FAST FEATHER RELAY SWITCH

CONSOLIDATED AIRCRAFT CORP. SAN DIEGO, CALIF.

SIZE G — 28E5014

R

28E5014

LET	ALTERATION	DATE	BY
A	WAS 22F046-(9)	9/4/40	WERNER
B	WAS 28E2045-4.00		
	W ORDING CHANGED ON PLATES	9/4/40	WERNER
C	ADDED TO B/M-6	11-4-40	WERNER
D	AN515 D6-12 WAS (8)		
	AN515 D6-13 ADDED	11-4-40	WERNER
E	N.A.F. 214067-1 WAS AN515 DR-10(8)	1/24/41	HOUCK
	AN960-A8 WAS 01006-N8-0304		
F	ASSY-2 ADDED TO DWG.	5/12/41	SWEENEY
	NOTES ADDED-		
G	ASSIGNED-9 SUB. ASSY FOR -2 ASSEMBLY IN B/M	7/3/41	DICK
H	ASSIGNED-8 SUB ASSY FOR -9 ASSEMBLY IN B/M	7/24/41	BAKER
I	28E2051-550 WAS 28205I-500 ON B/M	9/25/41	MOORE
J	ADD-3 ASSY	9/25/41	MOORE
K	REMOVED-3 ASSEM & -3 REQ FOR PBY-5A REMOVED		
	28E5782-FROM FACE & B/M	3/26/42	WOODWARD
L	CREATED-3 ASSY. SAME AS -2 ASSY EXCEPT REPLACED -10 SUB ASSY WAS -9 SUB ASSY		
	& 28E2051-560 WAS -550		
	ASSY. CREATED -10 SUB ASSY. SAME AS -9 ASSY EXCEPT		
	ADDED AN931-7-1111 NEG. WT. CHG.	11/24/42	GRAYSON
M	ADDED Q908-AB-8, AC365-D1032		
	AN520-D10-12 LOCATING DIMS 6 5/8 & 1 1/8, Ø .10 (.193) HOLE. NEG. WT. CHG.	1/26/43	GRAYSON
N	ADDED AN931-7-11 TO -0 & -2 ASSY'S. NO WT. CHG.	8/28/43	CHANDLER

E.O. 15322
E.O. 25417
E.O. 20063
E.O. 22677
E.O. 31154 PBY-5, PBY-5A
E.O. 28449
E.O. A11099 PBY-5
E.O. A11098 PBY-5
E.O. A 34537

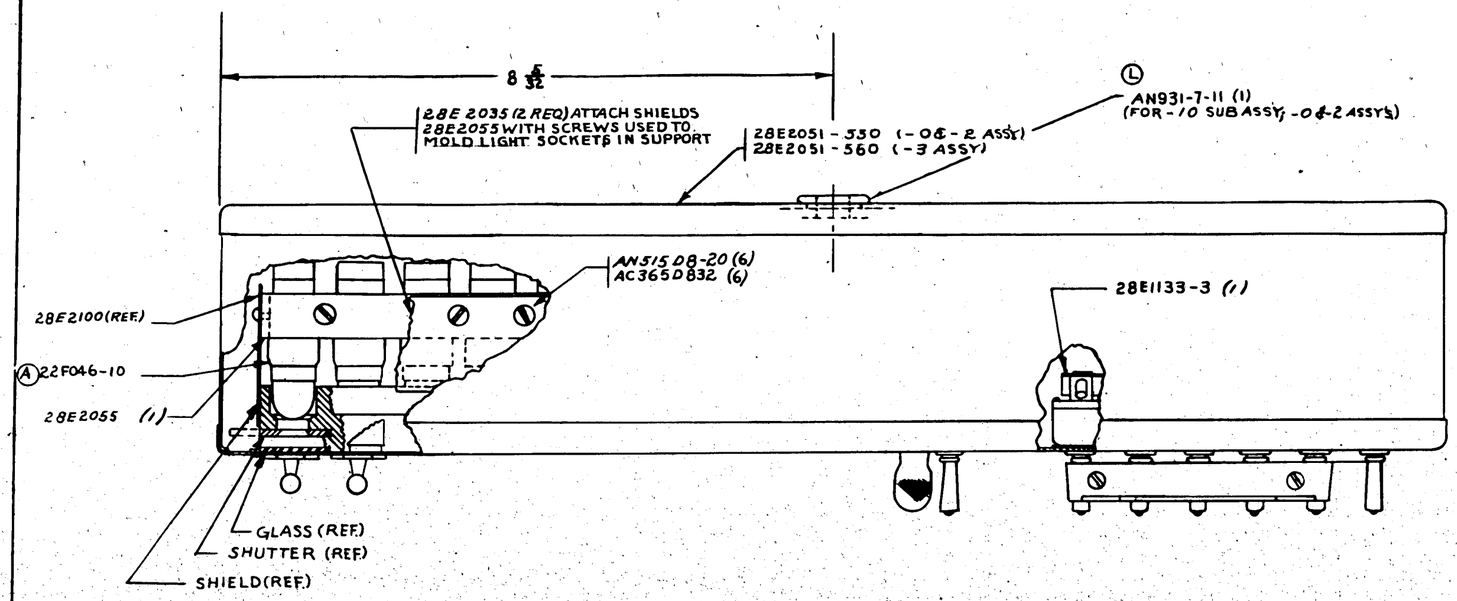
8 5/32
28E 2035 (2 REQ) ATTACH SHIELDS 28E2055 WITH SCREWS USED TO MOLD LIGHT SOCKETS IN SUPPORT
28EE2051 - 550 (-0 & -2 ASSY)
28E2051 - 560 (-3 ASSY)
Ⓛ AN931-7-11 (1) (FOR -10 SUB ASSY, -0 & -2 ASSY'S)
AN515 D8-20 (6)
AC365D832 (6)
28E2100 (REF.)
Ⓐ 22F046-10
28E2055 (1)
28E1133-3 (1)
GLASS (REF.)
SHUTTER (REF.)
SHIELD (REF.)

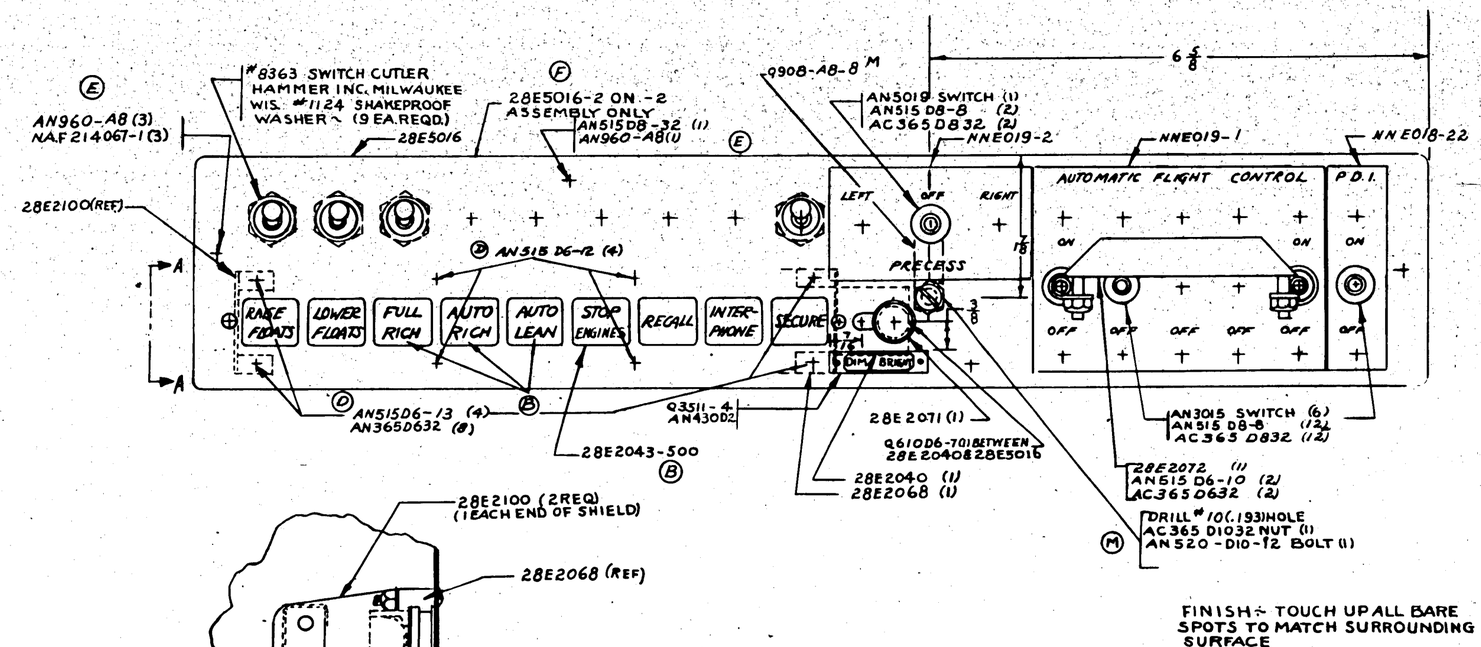

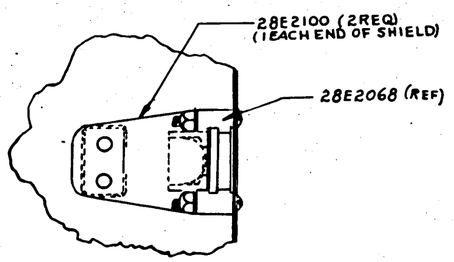

VIEW A-A

FINISH- TOUCH UP ALL BARE SPOTS TO MATCH SURROUNDING SURFACE

AC365-D1032						1					
AN520-D10-12						1					
Q908-AB-8						1					
AN931-7-11											
AN515-D8-20						6	6				
AN515-D6-12						4	4				
AN430-D2						2	2				
AN515-D6-13						4	4				
Q810-D6-7						1	1				
Q3511-4						1	1				
#8363K4	CUTLER HAMMER SWITCH					9	9				
#1124	SHAKE PROOF WASHER					9	9				
22F046-10						9	9				
28E5016-2						1	1				
28E2100						2	2				
28E2071						1	1				
28E2068						1	1				
28E2055						1	1				
28E2043-500						1	1				
28E2040						1	1				
28E2035						2	2				
28E5015-6						3	3				
-9 SUB ASSY & -10 SUB ASSY											
AC365-D832						14					
AC365-D1032						10					
AN515-D6-13						4					
Q810-D6-7						1					
Q3511-4						1					
NNE09-2						1					
NNE019-1						1					
NNE018-22						1					
#8363K4	CUTLER HAMMER	SWITCH				9					
#1124	SHAKE PROOF	WASHER				9					
AN3019						1					
AN3015						6					
AN515-D8-20						6					
AN515-D6-12						4					
AN515-D6-10						2					
AN515-D8-8						14					
AN430-D2						2					
22F046-10						9					
28E5016						4					
28EE2100						2					
28E2072						1					
28E2071						1					
28E2068						1					
28E2055						1					
28E2043-500						1					
28E2040						1					
28E2035						2					
28E1133-3						1					
28E5015-6	.064 DIA X 10 SOFT	TINNED COPPER	WIRE			3					
PARTS LISTED ON -8 SUB ASSY											
AN931-7-11						1	1				
28EE2051-550											
AN515-D8-8							1	1			
AN960-A8						3	3	3			
NAF(214067)1						3	3	3			
28E2051-550						1	1	1			
-10 SUB ASSY											
-9 SUB ASSY											
-8 SUB ASSY						1					

ASSY SHOWN ON DWG.	MODEL	NEXT ASSY	REQ.
-3	PBY-5A	28E2061	1
-2	PBY-5A	28E2061	1
-2	PBY-5	28E2061	1
-6	PBY-5	28E2061	1

REQUIREMENTS PER AIRPLANE

DRAWING	CALC WT
BUILT BY	NET WT

SCALE	
1/32	12"=1'-0

STAMP PART NUMBER WHERE SHOWN

PART NO	STOCK	MATERIAL	SPEC.	REQ 0	REQ 2	REQ 3	REQ 4	REQ 6
PARTS LIST PER ASSY				0	2	3	4	6

AC		KELLOGG	RICHARD	GREEN	Z	
MATL NONE	NOTED	11-17-39	12-5-39		12-17-39	R
HEAT TREAT	FINISH	DRAWN	CHECK	STRUCT	MAT	APPROV

NAME BOX ASSY - ELEC. - PILOTS SIGNAL SYSTEM

CONSOLIDATED AIRCRAFT CORP. SAN DIEGO, CALIF.

OPP HAND NONE

SIZE G | DWG 28E5015

R

IDENTIFICATION STRIPS FOR ASSEMBLIES SHOWN BELOW.	
STRIP NO.	ASSEM. DASH NO.
28E5019-2	-2
28E5591-2	-8
28E5720-2	-14
28E5591N-2	-18
28E5019-15	-30

FOR -8, -14, & -18 ASS'Y ONLY. REPLACE FUSE CLIPS NAF213011 (2) WITH STUD ASSYS (2) FOR 80 AMP FUSE (H-GNC) WHERE IDENT. STRIP CALLS FOR 80 A.

OHMITE "DIVIDOHM" #0362 50HM-25 WATT OR EQUIV. (1) ON -2, -8, -14, AND -18 ASS'Y.

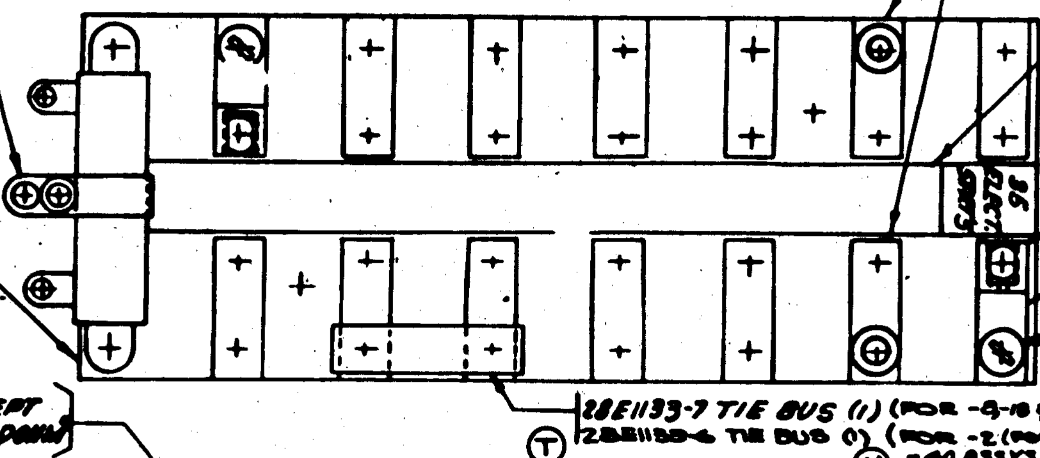

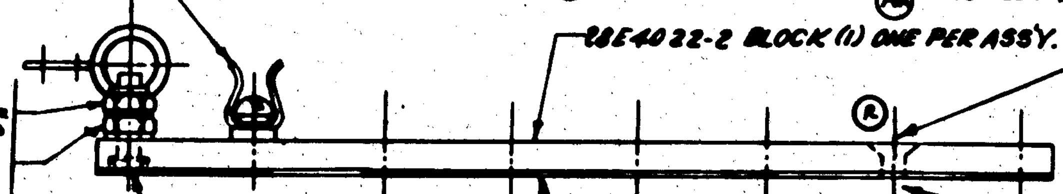

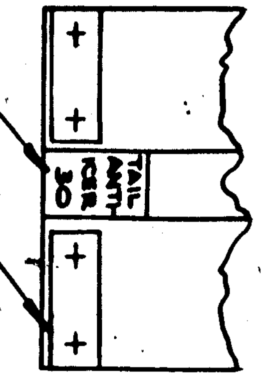

VIEW A

END ASSEM. FOR -30 & -40 ASSY'S.

IDENTIFICATION STRIPS FOR ASSEMBLIES SHOWN BELOW	
STRIP NO.	ASSEM. DASH NO.
28E5019-3	-3
28E5019-5	-5
28E5591-3	-9
28E5591-6	-11
28E5135-6	-12
28E5720-3	-15
28E5720-5	-17
28E5591N-3	-19
28E5591N-5	-21
28E5019-5	-25
28E5019-6	-31
28E5019-16	-32
28E5848-6	-40
28E5848-7	-34
28E5848-8	-36
28E5848-9	-38

LET	ALTERATION	DATE	BY
U	FOR -38 ASSY'S 28E5019-13 WAS 28E5135-3 NO WT. CHG.	12-15-42	
V	CREATED -30 ASSY NO WT. CHG.		
W	AN510B10-16, AN345B10, AC365B1032 & AN960B10 (2 EA.) REPLACED BY NAF213011, AN935-10, AN520B10-5, AN435C5-5 & 28E4021-5 (16 EA.) WERE (14 EA.) ADDED VIEW B FOR -26 ASSY. WT. CHG. NEG.		
X	CREATED -31 ASSY. NO WT. CHG.	12-15-42	
Y	CREATED -32 ASSY. NO WT. CHG.	1-15-43	
Z	ADDED NOTE "IT--AC365 ..." WT. CHG. NEG.	2-13-43	
AA	CREATED -32, -34, -36 & -38 ASSY'S. NO WT. CHG.		
AB	-40 ASSY. REPLACED THE -32 ASSY. CREATED BY E.O. A98430 - NO WT. CHG.	3-13-43	
AC	ON FACE & IN 3/4 FOR -30 & -40 ASSYS REMOVED AN510 B10-16 (2) AN345-B10 (2) AC365-B1032 (2) & AN960-B10 (2) - 28E4021-5, AN435-C5-5 - AN520-B10-5, AN935-10 & NAF213011 (16) EA. WERE (14) EA. 28E1133-7 (1) REPLACED 28E1133-6 (1) WT. CHG. NEG.	3-9-43	
AD	REMOVED -32 REQ'TS. FOR PBY-5 NEXT ASSY 28E4011 (1) NO WT. CHG.	3-30-43	

LET	ALTERATION	DATE	BY
M	REDRAWN & REVISED. ADDED -12, -13, -14, -15, -16, -17, -18, -19, -20, -21 ASSEMBLIES REPLACES 28E5020 DATED 3-11-41	1-20-41	
N	ADDED TO REQ'D PLANE -2, -4, -5 FOR PBY-5A & OA-10	4-21-41	
O	ADDED -22 ASS'Y FOR PBY-5A		
P	E.O.A28806 CREATED -23 & -24 ASSYS. ADDED 28E5019-10 (1) & 28E5135-8 (1). REVISED REQ/PLANE BLK. NO WT. CHG.		
Q	CREATED -26-28 ... AN345B10 (2) REPLACES AN365B10 (2) WAS (4); AN960B10 (2) REPLACES AN960B10 (2) WAS (4) ADDED C'SINK 3/8 x 82° - 2 HOLES ...		
S	LIM'TD -2 ASSY FOR PBY-5 TO SHIPS #91 ON ALSO LIM'TD -22 ASSY FOR PBY-5 TO SHIPS ...	1-1-42	
T	28E1133-6 WAS 28E1133-7 (1 EA.) (FOR -2 ASSY) LIMITED PBY-5 C-91876 #91 TO 345 NO WT. CHG.		
U	28E5019-3 WAS 28E5135-...		
AE	REVISED ... TO READ 28E4021-5 ... WAS (16) IN -34, -36, -38 ASSY WT. CHG. NEG.		
AF	REVISED NOTE: "GLUE 28E5019-7 ... ON -36 ASSY REMOVED REQ. FOR 28E5848-7 IN -34 ASSY & FOR 28E5848-8 IN -36 ASSY. WT. CHG. NEG.		

Margin notes beside the alteration table: E.O.A84502, E.O.A94331; E.O.A64718, E.O.A82678, CAC.2119(?); E.O.A94638; E.O.A98430, M.C.R. 16481; FLR 15667.

-NOTE:-
SANDPAPER FINISH FROM ONE FACE EACH OF BLOCKS 28E4022-2 AND 28E4022-3 AND GLUE TOGETHER AS SHOWN ON DRAWING.

-NOTE:-
Ⓩ IT IS PERMISSIBLE TO USE THE FOLLOWING PARTS AS ALTERNATES:
AN520-10-5 TO REPLACE AN520B10-5
AN510-10-16 TO REPLACE AN510B10-16
AN960-10 TO REPLACE AN960B10
AN345-10 TO REPLACE AN345B10
AC365-1032 TO REPLACE AC365B1032

IDENTIFICATION STRIPS FOR ASSEMBLIES SHOWN BELOW	
STRIP NO.	ASSEM. DASH NO.
28E5019-4	-4
28E5591-4	-10
28E5135-7	-13
28E5720-4	-16
28E5591N-4	-20
28E5019-8	-22
28E5019-10	-23
28E5135-8	-24
28E5019-13	-26
28E5019-12	-28

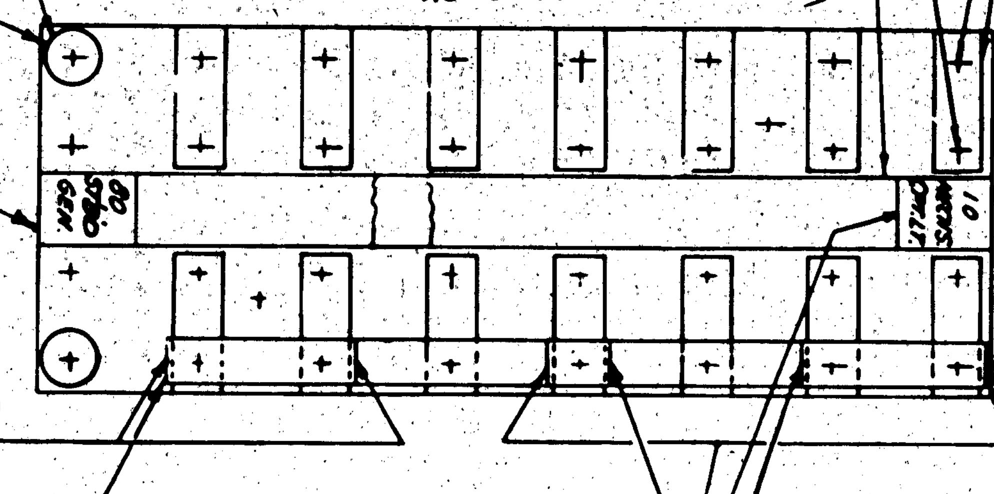

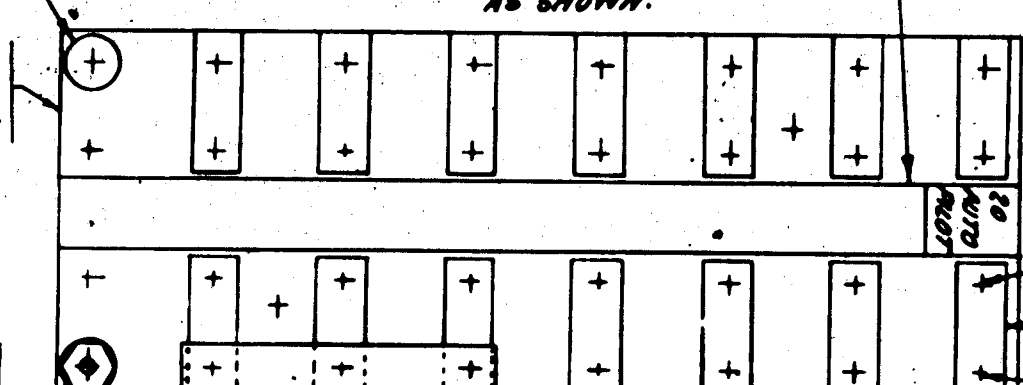

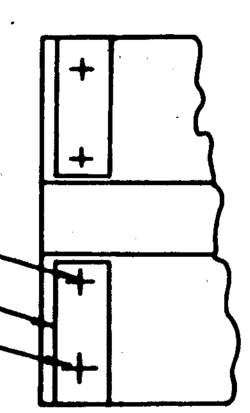

VIEW B

Ⓦ END ASSEM. FOR -26 ASSY ONLY.

Δ NOT TO BE USED FOR -2 ASSY OF PBY-5 C.70496 #1-167

□ NOT TO BE USED FOR -2 ASSY OF PBY-5 C.91876 #91-345.

ASSY. DASH NO.	MODEL	NEXT ASSY		PART
				28E5848-9
				28E5848-8
				28E5848-7
				28E5019-16
				28E5019-15
				28E5848-6
				OHMITE "0362" - 50HM-25W
				N-6HC -80AMP
				STOCK
				28E5019-1
-38	PBY-5A	28E4011	1	NAF213011
-36	PBY-5A	28E4011	1	28E5135-8
-34	PBY-5A	28E4011	1	AN515-D6
-40	PBY-5A	28E4011	1	AN960-A6
				AN960 B10
-32	PBY-5	28E4011	1	AN935-10
-31	PBY-5	28E4011	1	AN520-B10-5
-30	PBY-5	28E4011	1	AN510-B10-16
-28	PBY-5A	28E4011	1	AN435C5-5
-26	PBY-5	28E4011	1	AC365B1032
-25	PBY-5	28E4011	1	AC365D632
-24	PBY-5	28E4011	1	AN345B10
-23	PBY-5	28E4011	1	AN340D6
-23	PBY-5A	28E4011	1	28E5019-
-22	PBY-5A	28E4011	1	28E5019-
-5	PBY-5A	28E4011	1	28E5135-7
-4	PBY-5A	28E4011	1	28E5135-6
-3	PBY-5A	28E4011	1	28E5591N-
-21	28-SMN-AM	28E5526	1	28E5591N-4
-20	28-SMN-AM	28E5526	1	28E5591N-3
-19	28-SMN-AM	28E5526	1	28E5591N-2
-18	28-SMN-AM	28E5526	1	28E5720-6
-17	28-SMC-AMC	28E5526	1	28E5720-4
-16	28-SMC-AMC	28E5526	1	28E5720-3
-15	28-SMC-AMC	28E5526	1	28E5720-2
-14	28-SMC-AMC	28E5526	1	28E5591-6
-13	PBY-5	28E4011	1	28E5591-5
-12	PBY-5	28E4011	1	28E5591-4
-2	PBY-5	28E4011	1	28E5591-3
-11	28-SME-MA	28E5526	1	28E5591-2
-10	28-SME-MA	28E5526	1	28E5019-7
-9	28-SME-MA	28E5526	1	28E5019-6
-8	28-SME-MA	28E5526	1	28E5019-5
-5	PBY-5	28E4011	1	28E5019-
-4	PBY-5	28E4011	1	28E5019-
-3	PBY-5	28E4011	1	28E5019-2
-2	PBY-5	28E4011	1	28E4022-3
				28E4022-2
				28E4021-5
				28E1133-7
				28E1133-6
				28E1133-5
				28E5019-

Quantity columns (assy. dash no.): [illegible] … 5, [illegible], 9, 10, 11, 12, 13, 14, 15, 16, 17, 18, 19, 20, 21, [illegible], 30, [illegible]

REQUIREMENTS PER AIRPLANE

Beside the requirements table: C91876-91 & ON; C91876-91 & ON; C88976 #33 & ON; C91876 #91 & ON; C91876 #1-90; C91876 #1-90; C91876 #1-90; C88976 #1-58; C.70496 #118-167; C.70496 #118-167; C.91876 #91-345; C.70496 #1-117 & C.91876 #1-90; C.70496 #1-117, #1-117, #1-167

REPLACES 28E5020 DATED 3-11-41
REPLACED BY
SCALE 1/32 — 12" = 1'-0"
STAMP PART NUMBER WHERE SHOWN

A C						
NAVY NONE	NOTED	7-31-41	7-26			
HEAT TREAT	FINISH	DRAFT	CHECK	STRUCT	MAT	

NAME: PANEL ASSEMBLY - ELECT. - FUSE

CONSOLIDATED AIRCRAFT CORP. SAN DIEGO, CALIF.

OPP. HAND NONE — Q 28E5020

R 28E5020

LET	ALTERATION	DATE	BY
A	REVISED & CORRECTED TO COVER EQUIPMENT AS FURN. PLUG CONNECTIONS AT CONTROL UNIT CHANGED. EQ NOS REVISED AS FOLLOWS: NI-118 WAS A32C, NI-121 WAS A31C, NI-121-1 WAS A32C, NI-119 WAS A30C, NI-122 WAS A33C, NI-123 WAS A32D & NI-124 WAS ADDED TO UNIT. BOX ADDED		
B	ADDED ALTERNATE WIRING SET-UP FOR PBY-5A'S & OA-10 TO WIRE TABLE. ADDED WIRES 834-836 INCL.		
C	REVISED 834 & 835 WIRES LEADING AFT FROM ALTERNATE NAVIGATOR'S BOX.		

E.O. No. A1-1811 — k

NOTE: USE THIS ALTERNATE WIRING SET-UP ON PBY-5A & OA-10 SHIPS ONLY.

MECHANIC'S STATION BOX NI-122

MECHANIC'S STATION BOX NI-122

1ST PILOT'S STATION BOX NI-121

JUNCTION BOX NI-120

JUNCTION BOX NI-126

GUNNER Nº3 STATION BOX NI-122

GUNNER Nº1 STATION BOX NI-122

GUNNER Nº2 STATION BOX NI-122

PILOTS CONTROL BOX NI-119

GF4 RECEIVER

20-SLEEVE 21-TIP

INTERPHONE JUNCTION BOX NI-125

RECEIVER #2

TO PLUG TIPS

RECEIVER #1

BOWMAN'S STATION BOX NI-122

14-TIP 15-SLEEVE 16-RING

GF4 TRANSMITTER

INTERPHONE CONTROL UNIT NI-120

NAVIGATOR'S STATION BOX SEE NOTE

P701

24V.

2ND PILOT'S STATION BOX NI-121-1

SECTION NO	CONDUIT DIAMETER	CABLE NUMBERS
100	3/8	819-821 INCL.
102	1/2	805-810 "
104	1/2	814-818 "
106	1/2	800-804 "
108	1/2	825-829 "
110	3/8	822-824 "
112	3/8	830-832 "
114	3/8	833-835 "
116	3/8	836-838 "
140	3/8	839-841 "
143	1/2	842-847 "

WIRE TABLE

WIRE Nº	LEN		WIRE Nº		LEN
800-804 INCL	90		830-832 INCL		62
805,6,7,9 & 810 "	95		833-835 "		196
814-818 "	90		836-838 "		24
819-821 "	96		839-841 "		200
822-824 "	150		842-847 "		72
825-829 "	89	B	854-856 "		206

WIRE LENGTHS ARE IN INCHES

NOTE:-
WIRE NUMBERS ARE SHOWN ABOVE WIRES.
CONDUIT SECTION NUMBERS SHOWN IN CIRCLES.
SHIELDED MICROPHONE CIRCUITS SHOWN BY HEAVY LINES SHOULD HAVE SHIELDING REMOVED BACK TO CONDUIT FITTINGS IN EACH BOX & GROUND ALL SHIELDS THRU INSULATED CONDUCTORS TO GROUND TERMINALS.
ALL WIRE "NU-COR" #20(1/16) TINNED COPPER, RUBBER & FABRIC COVERED #909 EXCEPT:-
801, 810, 815, 819, 824, 829, 832, 835, 838, 839, 844, 845 & 854.
SHIELDED "NU-COR" #18(1/20) A.W.G. #197A

WIRES Nº 842-847 INCL. ARE TO BE INST. IN COND Nº 143 ON ALL SHIPS WHEN STA. BOX NI-122 IS FURN. FOR NAV. POSITION, CONNECT WITH WIRES: 842, 845 & 846 — REMAINING WIRES TO BE TAPED AT END & LEFT IN CONDUIT.
NAV. STA. BOX SHOWN WILL BE INST. & CONN. BY NAVY PERSONELL AFTER DELIVERY.

PBY-5A & PBY-5 — 2050

PART No	STOCK	MATERIAL	SPEC	WIRES NOTED LH REQ	RH REQ	LH REQ	RH REQ	LH REQ	RH REQ
PARTS LIST PER ASSY.				-0	-2	-3	-4	-5	

A C — NAVY NONE — HEAT TREAT — NONE — FINISH — 7-28-44 — DRAFT — CHECK — STRUCT — HEAT — APPROVED

NAME WIRING DIAGRAM - ELEC - RL-24A INTERPHONE

CONSOLIDATED AIRCRAFT CORP. San Diego, Calif.

DWG G — 28E5042

R

LET	ALTERATION	DATE	BY
R	REMOVED -6-,17&-12, IN BM FOR -8,-9,-10,-11,-13,-16,-13 -14,-19 & -20 "MAKE FROM CAC BOX #38-324 "WAS ".040 x3 3/4 x 24 ALC." & FOR -75-18 "MAKE FROM CAC COVER #38-324" WAS .064 X 10 X 10 AL. AL. WT. CHG. REQ.	5-18-42	REINEY
S	ON FACE: ADDED NOTE "ALSO FOR ---- NO. (5) 464 ONLY NO WT CHG	7-8-43	PUTNAM
T	ADDED STENCIL STENCILING NOTE "STENCIL ---- ASS'YS" & DIMS: 2 3/4 TYP & 1/8 TYP NO WT. CHG.	8/4/43	[illegible]

J.W.H.
HCR #397

LET	ALTERATION	DATE	BY
▲	ADDED DIM. 3 1/2, 5 1/32, 5 1/2, 3/16, 7/16 & 9/16	1-16-40	SIMONS
B	ADDED -12 & DIM. TO DWG. & BM	12-40	DOMAS
C	NAF 21407-1 & AN 960 WERE		
	AN 526 DD 832-8 & Q 7006-N9 WAS		
	ADDED NOTE "DRILL & TAP... WAS		
	#18 (169) 4 HOLES THESE TO MATCH		
	ANCHOR CLIPS	12-30-40	SIMS
D	BUR 347-2355 INCL. & 2423-2427 INCL. WAS "55-67 INCL & 134-159 INCL. - ADDED 2 HOLES IN BACK VIEW	4-29-41	ANDREOLY
E	1 31/32 DIA. CHGD TO 2 1/32 DIA IN TWO PLACES. 2 DIM. CHGD TO 1 3/8 ONE PLACE	6-27-41	C.W. MILLER
F	ON REQ'AIR PLANE & BM ADDED -70 & -80 ASSYS. ON FACE OF DRG. (BIRD VIEW) ADDED 2 31/32 DIA & 3 DIA HOLES FOR FLEX. FITTING & TERM. STRIP MTG.		
G	ON FACE OF DRG DESIGNATED -N & -80 ASS'YS ON 2 1/32 DIA. HOLES	8-19-41	MILLER

LET	ALTERATION	DATE	BY
H	ADDED PBY-5A (CONT. 70496) 28-5MB	11-29-41	E. ROTHE
	AND 28-5AMB TO REQTS/AIRPLANE		
	CREATED - 50 & 60 ASS'Y PBY-5A, 5AM (CONT. # 77713) CREATED -15-16-17		
	FOR -50 & -60 ASS'YS, -13 WAS -8; -14 WAS -9 ON -70 & -80 ASS'YS. 1 1/8 WAS 3/4; 1 1/2 WAS 3/4 ON -7		
J	COVER CREATED - 85 & -90 ASS'YS.		500 5-2-42
	REMOVED -0 & -2 ASS'YS FROM PBY-5 & ADDED -85 & -90		
K	NO WT. CHG. "CHG WAS # "CHG (6-4-42)	8-9-42	A.S. WOLF
L	NOWT. CHG. ADDED #30 (128) DRILL 1 DRAIN HOLE (NEG. WT. CHG.)	8-20-42	CLARK 500 10-20-42
M	IN BM. FOR -85 & -7 REMOVED MAT. & SUBSTITUTED "NOTED" CHD. STOCK OF -66 & -7 FROM .040 TO .064 REMOVED NOTE #6 FROM FACE, ADDED MAT. NOTE TO FACE WT. 1.11 WAS .50	11-12-42	PATTISON 500 5-7-43
N	ADDED -82 & -94 ASS'YS WT. CHG. NEG.	1-20-43	DENHAM 500 2-24-43
P	IN BM. -18 "NOTED" WAS ALC 2487 4124 (11") ADDED STOCK & "NOTED". FOR -17 & MATERIAL NOTE FOR -176-18, WT. CHG. .154# WAS 1.11#	1-30-43	RENAUD 500 2-25-43
Q	ADDED 2 3/32 DIA. HOLE IN -20 " WT. CHG. NEG.	2-20-43	RENAUD 500 3-5-43
		3-5-43	RENAUD

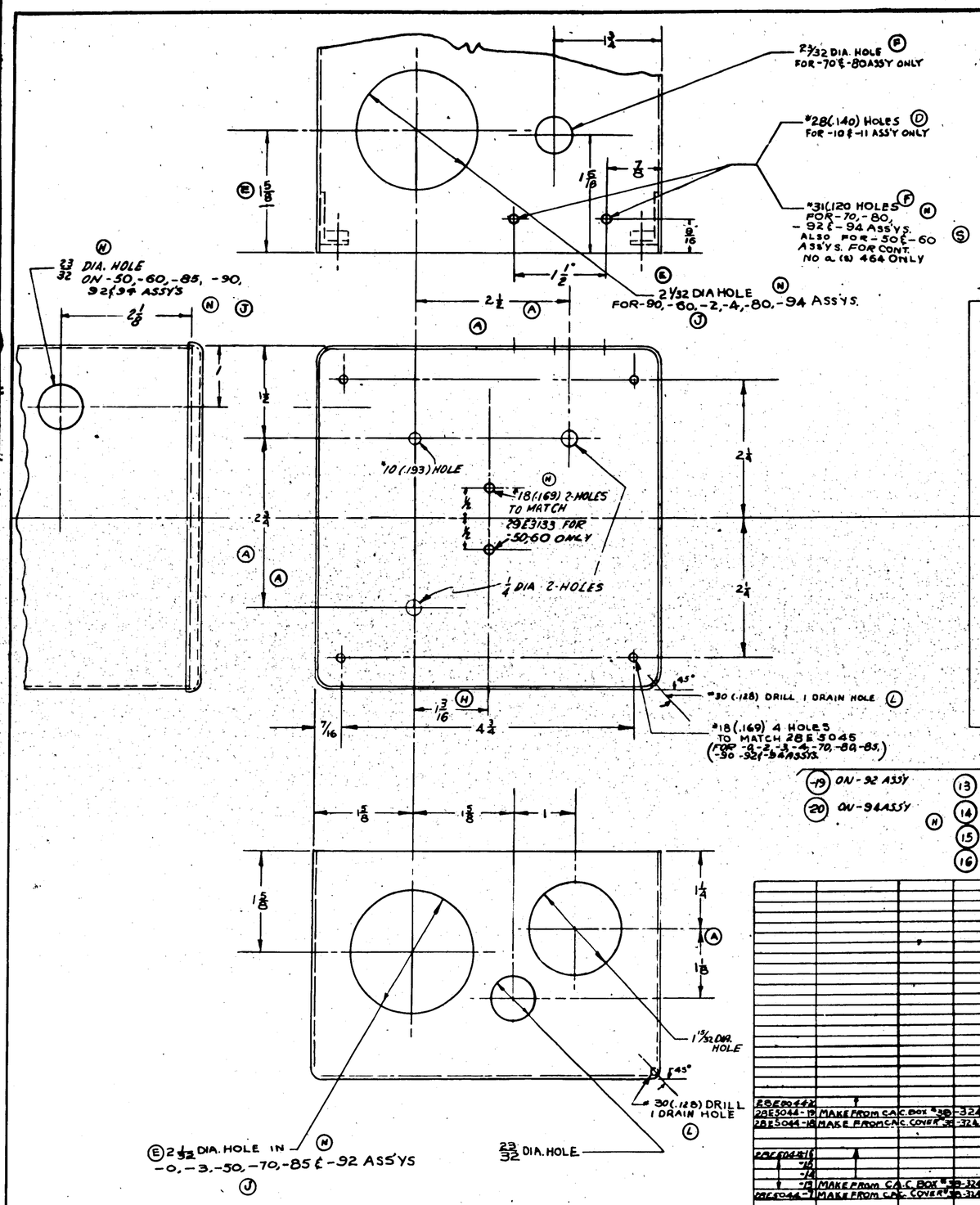
2 3/32 DIA. HOLE (P) FOR -70 & -80 ASS'Y ONLY
#28 (.140) HOLES (D) FOR -10 & -11 ASS'Y ONLY
#31 (.120) HOLES (F) (M) FOR -50 & -60 ASS'YS. FOR CONT. NO a. (5) 464 ONLY (S)
2 3/32 DIA HOLE (N) FOR -90, -80, -2, -4, -80, -94 ASS'YS. (J)
2 3/32 DIA. HOLE (N) ON -50, -60, -85, -90, 92 & 94 ASS'YS (J)
#10 (.193) HOLE
#18 (.169) 2 HOLES TO MATCH 28E3133 FOR -50, 60 ONLY (N)
1/4 DIA 2 HOLES
#30 (.128) DRILL 1 DRAIN HOLE (L)
#18 (.169) 4 HOLES TO MATCH 28E5045 (FOR -0, -2, -3, -4, -70, -80, -85, -90 -92 & -94 ASS'YS.)
2 3/32 DIA. HOLE IN (N) -0, -3, -50, -70, -85 & -92 ASS'YS (J)
23/32 DIA. HOLE
1 31/32 DIA. HOLE
#30 (.128) DRILL 1 DRAIN HOLE (L)

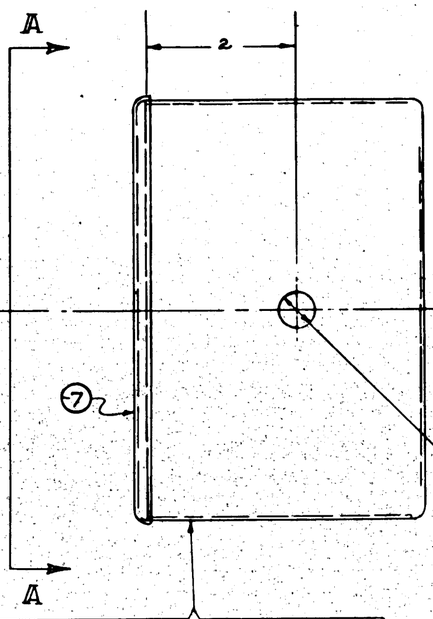

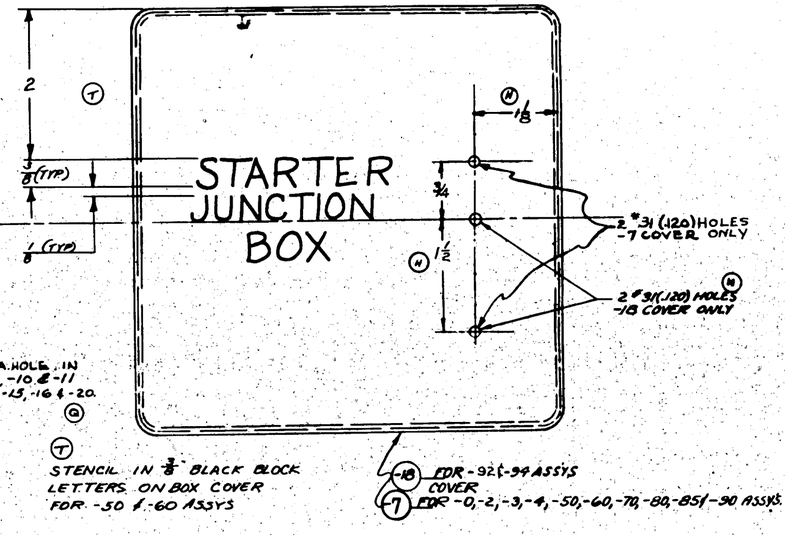
STARTER JUNCTION BOX
2 (T)
3/8 (TYP)
1/8 (TYP)
1 1/8 (N)
3/4
1 1/2 (N)
2 #31 (.120) HOLES -7 COVER ONLY
2 #31 (.120) HOLES -18 COVER ONLY (N)
(18) FOR -92 & -94 ASS'YS COVER
(7) FOR -0, -2, -3, -4, -50, -60, -70, -80, -85 & -90 ASS'YS.
T STENCIL IN 3/8 BLACK BLOCK LETTERS ON BOX COVER FOR -50 & -60 ASS'YS

VIEW A A

(19) ON -92 ASS'Y
(20) ON -94 ASS'Y

(13) ON -70 ASS'Y
(14) ON -80 ASS'Y (J)
(15) ON -50 & 85 ASS'YS
(16) ON -60 & 90 ASS'Y

(8) ON -0 ASS'Y
(9) ON -2 "
(10) ON -3 "
(11) ON -4 "

PART NO	STOCK	MATERIAL	SPEC.	A REQ	B REQ	C REQ	D REQ	E REQ	F REQ	G REQ	H REQ
PARTS LIST PER ASS'Y				-70	-80	-50	-60	-92	-94		
28E5044-2											
28E5044-19	MAKE FROM CAC BOX #38-324										
28E5044-18	MAKE FROM CAC COVER #38-324										
28E5044-1											
-15											
-14											
-13	MAKE FROM CAC BOX #38-324										
CAC 5044-7	MAKE FROM CAC COVER #38-324										

C91876 #223 & ON CONT. 70496 ALL BUT 15 SHIPS
CONT 88476 C. NO a. 464 CONT 77713
70496

NOTES:
1. - FINISH 1 PRIME / 1 GREEN PRIME OUTSIDE
2. - DIM. OF BOX SAME AS IN 28E5014. (REF.)
3. - ALL ASS'YS SAME EXCEPT AS NOTED.
4. - NO FIN. FOR 3/32 R. AROUND HOLES.
5. - ALL DIM. TO INSIDE OF BOX.

2 - PBY-5 #140 & OVER & ALL 28-5 SHIPS EXCEPT NOTED USE -0 & -2 ASS'YS PBY-5 BU # 2347 TO 2355 INCL. & 2422 - 2427 INCL. USE -3 & -4 ASS'YS. 15 SHIPS C91876 #222

3 - BOXES HAVE BEEN MADE BY EX. DEPT. FOR FIRST TEN AIRPLANES.

FINISH CODE	
Z	[illegible]
P	[illegible]
GP	[illegible]
C	CADMIUM PLATE

CAC BOX & COVER #38-324 MAY BE PURCHASED FROM POULSEN & NORDON LOS ANGELES, CALIF. P/N 1213-324, 1214-1 OR EQUIV.

DASH NO.	MODEL	NEXT ASSY	QTY.
-94	PBY-5	28E5053	1
-92	PBY-5	28E6052	1
-2	PBY-5	28E5053	1
-0	PBY-5	28E5053	1
-2	28-5MN-MM	28E5053	1
-0	28-5MN-MM	28E5053	1
-50	PBY-5A	28E6053	1
-60	PBY-5A	28E5053	1
-2	PBY-5A	28E5053	1
-0	PBY-5A	28E5053	1
-80	28-5AMC	28E5053	1
-70	28-5AMC	28E5053	1
-80	28-5MC	28E5053	1
-70	28-5MC	28E5053	1
-2	28-5MEMA	28E5053	1
-0	28-5MEMA	"	
-4	PBY-5	"	
-3	PBY-5	"	
-85	PBY-5	"	
-90	PBY-5	"	

REQUIREMENTS PER AIRPLANE
DISPLACED — DISPLACED BY — 1.64# GALS. QTY. — ASS'Y QTY.
SCALE 12" = 1'-0"
STAMP PART NUMBER WHERE SHOWN

PART NO	STOCK	MATERIAL	SPEC.	-0 REQ	-2 REQ	-3 REQ	-4 REQ	-85-90 REQ.
PARTS LIST PER ASS'Y.								
-16								
-15	MAKE FROM CAC BOX #38-324							
-11								
-10								
-9								
-8	MAKE FROM CAC BOX #38-324							
-7	MAKE FROM CAC COVER #38-324							

AC		DES. & PROJECT ENGR.	Booher
NAVY NOTED - HEAT TREAT	NOTED - FINISH	10/8/42 to 2-25-43	
		DRAFT	CHECK

NAME BOX ASS'Y - ELEC. STARTER RELAY SW.
SIZE G
DWG. 28E5044
OPP. HAND MAKE
CONSOLIDATED AIRCRAFT CORP. SAN DIEGO, CALIF.

28E5044 REV

LET	ALTERATION	DATE	BY	LET	ALTERATION	DATE	BY

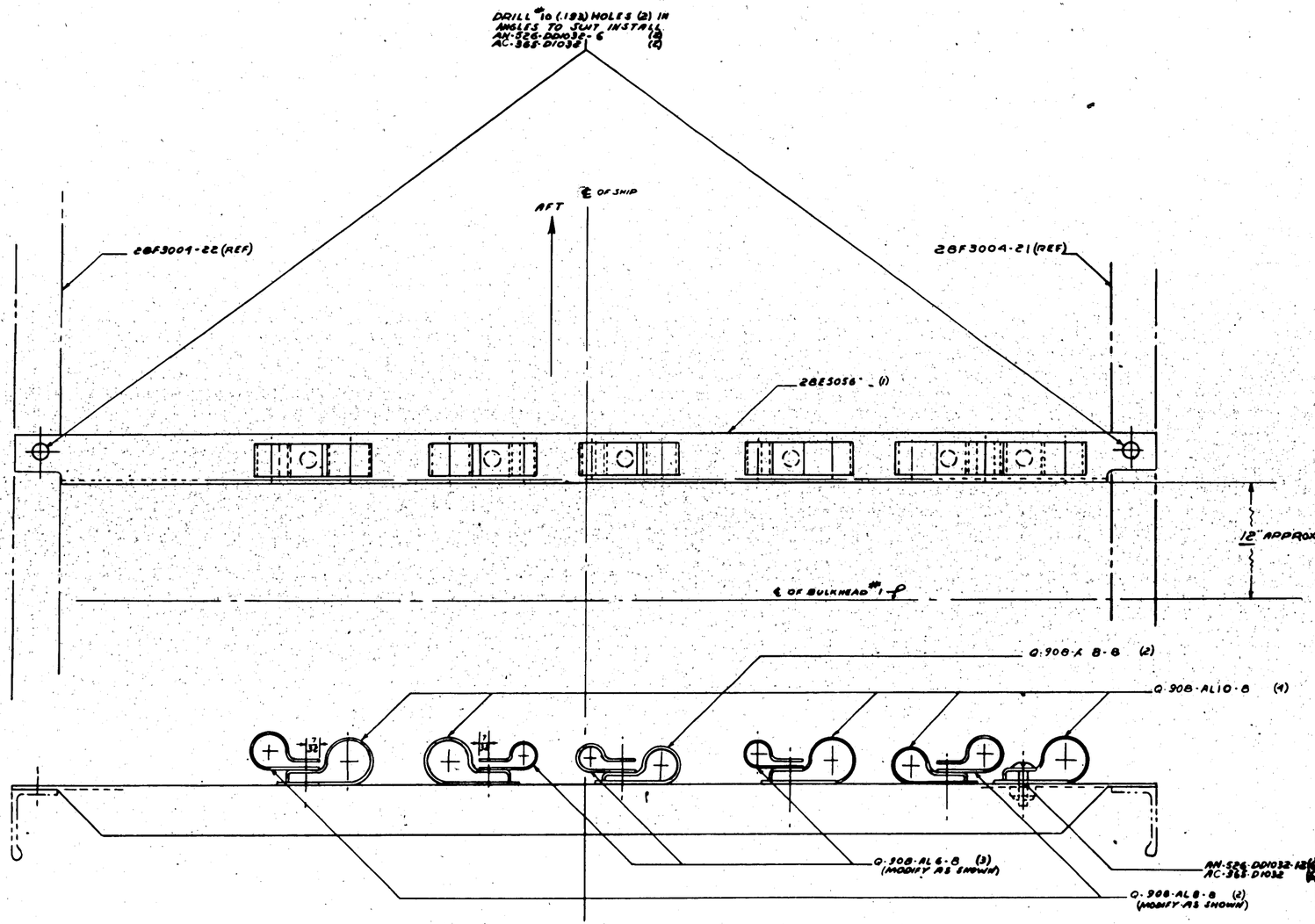

Parts made & inst in all airplanes to date

-0	P&W-SA	28E1011	1
-0	P&W-S	28E1011	1
ASSY DASH NO.	MODEL	NEXT ASSY	QTY

REQUIREMENTS PER AIRPLANE

REPLACES — CHGE. NO.

REPLACED BY — ACT. NO.

LIMIT ON DIMENSIONS UNLESS OTHERWISE SPECIFIED ± 1/32 — SCALE 12"=1'-0"

STAMP PART NUMBER WHERE SHOWN

PART NO	STOCK	MATERIAL	SPEC.	LH REQ.	RH REQ.	LH REQ.	RH REQ.	LH REQ.	RH REQ.	LH REQ.	RH REQ.
PARTS LIST PER ASSY.				-0	-2	-3		-4		-5	
Q-908-AL6-8										1	
Q-908-AL6-8											1
Q-908-AL8-8										2	
AC365-D1032										6	6
AN526-DD1032-12										2	2
AN526-DD1032-6										2	2
28E3056										1	
-8											

A C

NAVY NONE — HEAT TREAT — FINISH

ON DETAILS

	DRAFT	CHECK	STRUCT	MAT.	APPROV	ENG
10-19-44	4 Yon & Boehne			3 PR KEPT		W.A. R

NAME INSTAL & ASSY SUPPORT ELEC FLEX COND MANIF JUNC BOX

OPP HAND NONE

CONSOLIDATED AIRCRAFT CORP. SAN DIEGO, CALIF.

DWG. SIZE G — 28E5057

R

EO A5205

EO A 3590
PBY-6

LET	ALTERATION	DATE	BY	LET	ALTERATION	DATE	BY
A	CHANGE MATERIAL OF -8(REF) TO 52S0 ALC & 47AII-A CRANGED VIEW & ADDED DETAIL B-B						
B	REMOVED PROVISION FOR TWO CHROMATE CONFORMS ON DWG 7-168						

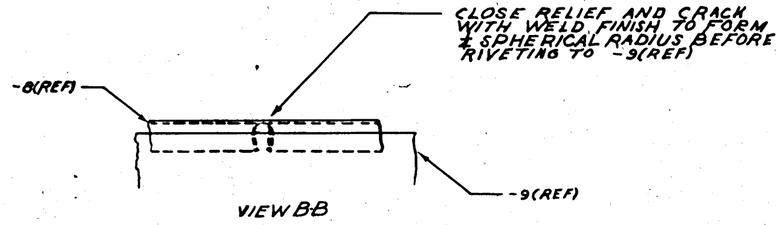

VIEW B-B

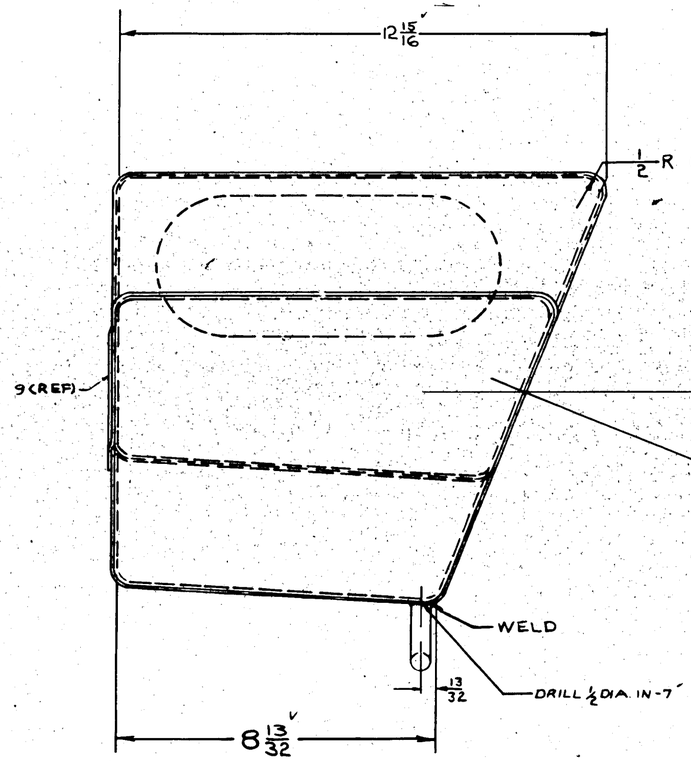

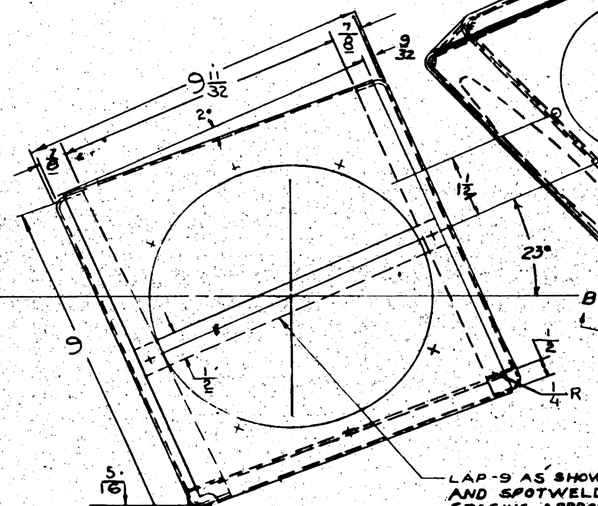

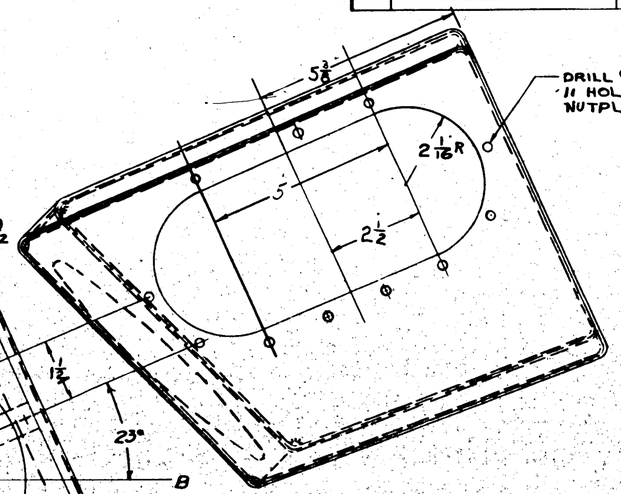

1. ASSEMBLE WITH AN442D3 RIVETS AT ¾ SPACING-APPROX.
2. USE MARINE GLUE AND FABRIC
3. JOINTS MUST BE WATERTIGHT. BETWEEN ALL PARTS
2.H.T-8 SR53 AFTER FORMING

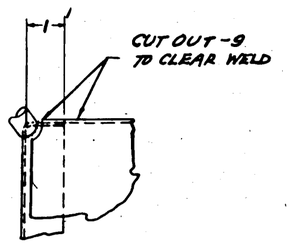

VIEW A-A

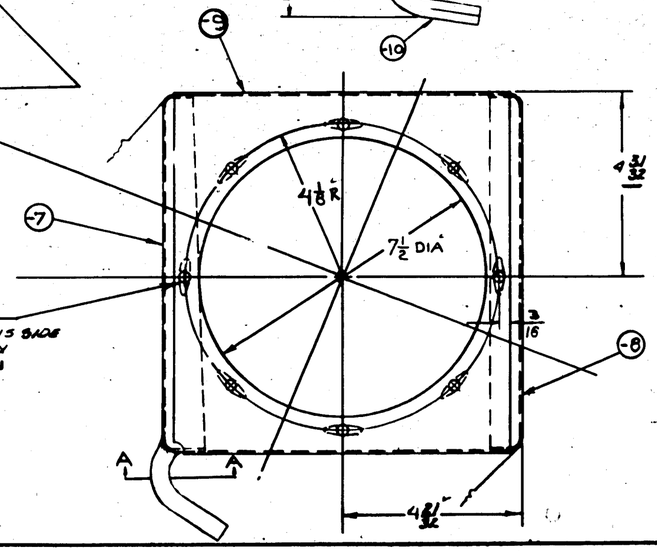

AC366DF1032
AN425-D3 FLUSH THIS SIDE
8 PLACES EQUALLY SPACED AS SHOWN

NAVY NO. 2406-2455 INCL.
Contract Change "X"
SO 936-49

-10 ½ O.D. X 042 X 3½ 3250 T6 47121-A 1
-7 .040 X 15½ X 11¼ 6250 AL 47AII-A 1
PARTS ON -6 SUB-ASSY

AC366DF1032 B
AN425-D3
AN 442 D3

28E5085-8	.040 X 16½ X 11¼	3250 ALC	47AII-A	1													
28E5085-6	SUB-ASSY			1													
PART No	STOCK	MATERIAL	SPEC.	LH REQ	RH REQ	LH REQ	RH REQ	LH REQ	RH REQ	LH REQ	RH REQ	LH REQ	RH REQ	LH REQ	RH REQ	LH REQ	RH REQ
PARTS LIST PER ASSY				-0	-2	-3	-4	-5									

ASSY DASH No.	MODEL	NEXT ASSY	No.					
	PBY-6	28E5042	1					
REQUIREMENTS PER AIRPLANE								
REPLACED		2.0	EACH QTY					
REPLACED BY			ASY QTY					
SCALE: 1" = 1'-0"								
STAMP PART NUMBER WHERE SHOWN								

A.C.		KARCL	Ream	5	10/9/41		L.C.
NAVY NONE	Z-P	4-5-41	F.V.				
HEAT TREAT	FINISH	DRAFT	CHECK	STRUCT	MAT	APPROV	ENG.

NAME DRAIN TRAP-AIR OUTLET AUX POWER PLANT

OPP. HAND

CONSOLIDATED AIRCRAFT CORP. San Diego, Calif.

DWG G

DWG 28E5085

R

LET	ALTERATION	DATE	BY	LET	ALTERATION	DATE	BY
A	ADDED TO FACE & QTY: 28E1109-2 28E-0632-6 (2)	9-28-42	KA				
B	ADDED NAF1034-4-10 (4) & LITTLEFUSE #1422-4AG FUSEHOLDER (2)						
C	Q6202-4 W AS Q6202-1 INTCHG. NEG. ADDED 28E5215-6 INT. CHG. NEG.	4-4-43	Johnson				
D	CREATED - 2 ASSY SAME AS -0 ASSY EXCEPT 28E5216-6 USED ON -0 ASSY ONLY. REMOVED 28E6215-6 FROM B/M FOR -0 ASSY	5-14-43	Gaylord				

R&S EO A11310
E.O.# A32285
E.O.# A34716

NAF 213019-3
NAF 213028-3

NAF. 213019-6
NAF. 213028-6

28E5026-2 PANEL ASS'Y
NAF1034-4-10 (4)
LITTLEFUSE #1422 4 AG (B)
FUSEHOLDER (2)

28E5113-7
COVER (REF.)

AN526-DD1032-12 3 PLCS
AC365-D1032

28E5114 NAME PLATE

NAF 310594
SWITCH 1 REQ.

DYNA-MOTOR OFF PORT GEN.
A.C. SELECTOR SWITCH

AN526-DD832-8
AC365-D832
2 REQ.

(B)
Q6202-4 TERMINAL (1 REQ)
AN515-4-7 (2 REQ)
AN340-4 NUT (2 REQ)
AN960-4AL (2 REQ)

NAF. 213019-4
NAF 213028-4

28E5113

NAF. 213019-6
NAF 213028-6

(A)

AN526-D632-6 (2) (A)
28E1109-2 (A)

1 1 1/16

1/8

(C)
NOTE
SHELLAC 28E5215-6 TO INSIDE OF COVER 28E5113-7 & COVER WITH SHELLAC.

NAF. 213019-4
N.A.F. 213028-4

NAF 213019-6
NAF. 213028-6

CONTR. # 91876				
#118-167 CONT. # 70496	-2	PBY5	28E4018	1
	-0	PBY5	28E4018	1

ASSY DASH NO.	MODEL	NEXT ASSY	QUAN.
REQUIREMENTS PER AIRPLANE			
REPLACED BY			
REPLACED		CALC. QTY	
STAMP PART NUMBER WHERE SHOWN	SCALE 12"=1'-0"		

PART NO	STOCK	MATERIAL	SPEC	LH RH REQD. -0	LH RH REQ. -2	LH RH REQ. -3	LH RH REQ. -4	LH RH REQ. -5
1442-4AG LITTLEFUSE FUSEHOLDER					2			
28E1109-2				1	1			
C-9R CUTLER & HAMMER SW. NAF 310594				1	1			
Q6202-4 TERMINAL					1			
NAF1034-4-10					4			
NAF 213028-6				3	3			
NAF 213028-4				2	2			
NAF 213028-3					1			
NAF. 213019-6				3	3			
NAF 213019-4				2	2			
NAF 213019-3				1	1			
AC 365-D1032				3	3			
AC365-D832				2	2			
AN526-D632-6				2	2			
AN515-4-7				2	2			
AN526-DD832-8				2	2			
AN526-DD1032-12				3	3			
AN340-4				2	2			
AN960-4AL				2	2			
28E5215-6				—	—			
28E5026-2 PANEL				1	1			
28E5114 NAMEPLATE				1	1			
28E5113 BOX				1	1			

PARTS LIST PER ASSY.

A.C.		ENGINEER	9-24-42		BM		
NAVY NONE	SEE DET'S.		9-24-42	Becker			
HEAT TREAT	FINISH	DRAFT	CHECK	STRUCT	MAT	APPROV	ENG.

NAME BOX ASS'Y-ELEC. A.C. FUSE & SELECTOR SWITCH
CONSOLIDATED AIRCRAFT CORP. San Diego, Calif.

OPP HAND NONE
DWG. G
28E5097

E.O. A11618	LET	ALTERATION	DATE	BY	LET	ALTERATION	DATE	BY
	A	AN EACE AT DWG & RM A.S.MFG. CARRIER (2), & R9OBA-12-B (2) REMOVED	3/6/41	NELSON				

6

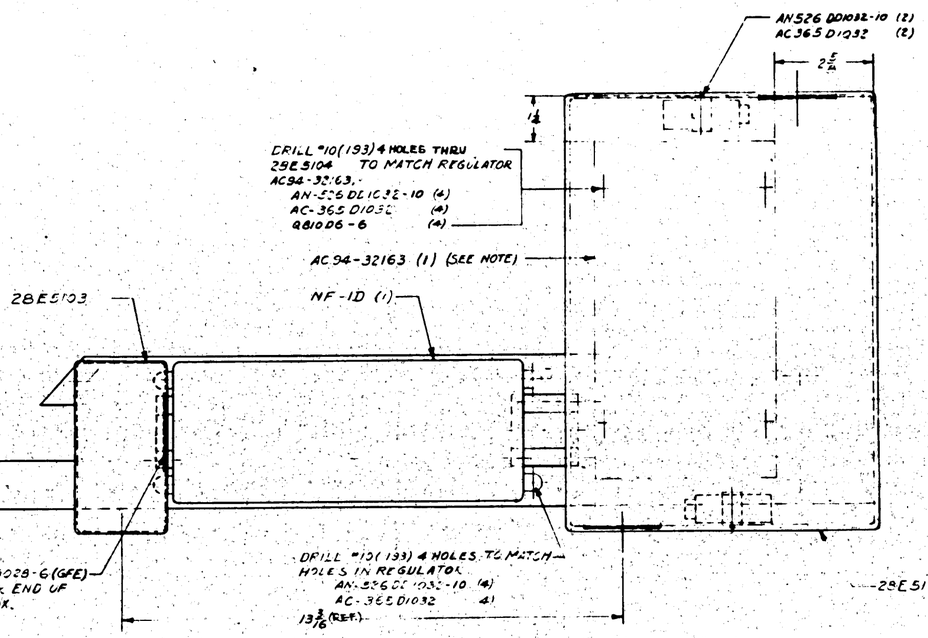

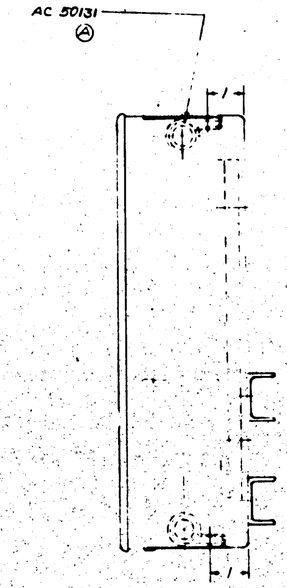

NOTE:
GEN. CONTROL PANEL AC 94-32163 GOV. FURN. EQUIPMENT - AIR CORPS TYPE

SHIPS: #118-167 INCL.
BU #2406-2455 INCL
Cate. Exempt X

ITEM	PART No	STOCK	MATERIAL	SPEC.	LH REQ. -0	RH REQ. -2	LH REQ. -3	RH REQ. -4	LH REQ. -5	RH REQ. -6
1	NF-1D	VOLTAGE REG. (SEE NOTE)			1					
2	AC94-32163	GOV. FURN. EQUIP.								
3	R810D6-6				4					
4	AN-526DD1032-10				10					
5	AC-365D1032				10					
6	28E5104				1					
7	28E5103				1					
8					-6					

PARTS LIST PER ASSY.

-0	PAT. #	SPEC: A-800	1
-0	PAT. #	28E5018-000	1

ARMY DAMN No. | MODEL | NEXT ASSY. | QUA.

REQUIREMENTS PER AIRPLANE

REPLACES 4.97 Gold. Wt.

REPLACED BY Adv. Wt.

Loss on Shrinkage Dwg. Nos. Dimensions Specified

SCALE 6" = 1'-0"

STAMP PART NUMBER WHERE SHOWN

AC					
NAVY NONE	NOTED		3/3/41	Booher	
HEAT TREAT	FINISH		DRAFT	CHECK	STRUCT.

NAME ASSEMBLY-ELEC. VOLTAGE CONTROL UNITS-BLK'D #4

CONSOLIDATED AIRCRAFT CORP. San Diego, Calif.

MAT.	APPROV.	ENG.

OPP. HAND NONE

DWG. G SIZE 28E5102

LET	ALTERATION	DATE	BY	LET	ALTERATION	DATE	BY
A	6 7/8 DIMEN. WAS 6	4/16/41	HOLLAND				
B	2450 COND.A WAS 24ST. COND'T.	5-9-41	SALS				
C	ADDED TWO HOLES & COND. FITTINGS & ADDED .5 MFD COND., TERM STRIP Q 6202-4, TERM BLOCK 28E5128-2 & SHOWED SCREW. REMOVED HOLES ON FACE [illegible]	7-[illegible]-41	[illegible]				
D	.5MFD CAPACITOR, LOW VOLTAGE, WAS 5MFD LOW VOLTAGE CONDENSOR.	8-6-41	HOLLAND				
E	ADDED 9/32 DIA HOLE & LOCATING DIM'S & NAF 213019-4(1) & NAF 21028-4(1)	8-6-41	HUNT				

E.O. A-5252 PBY-5

E.O. A7778

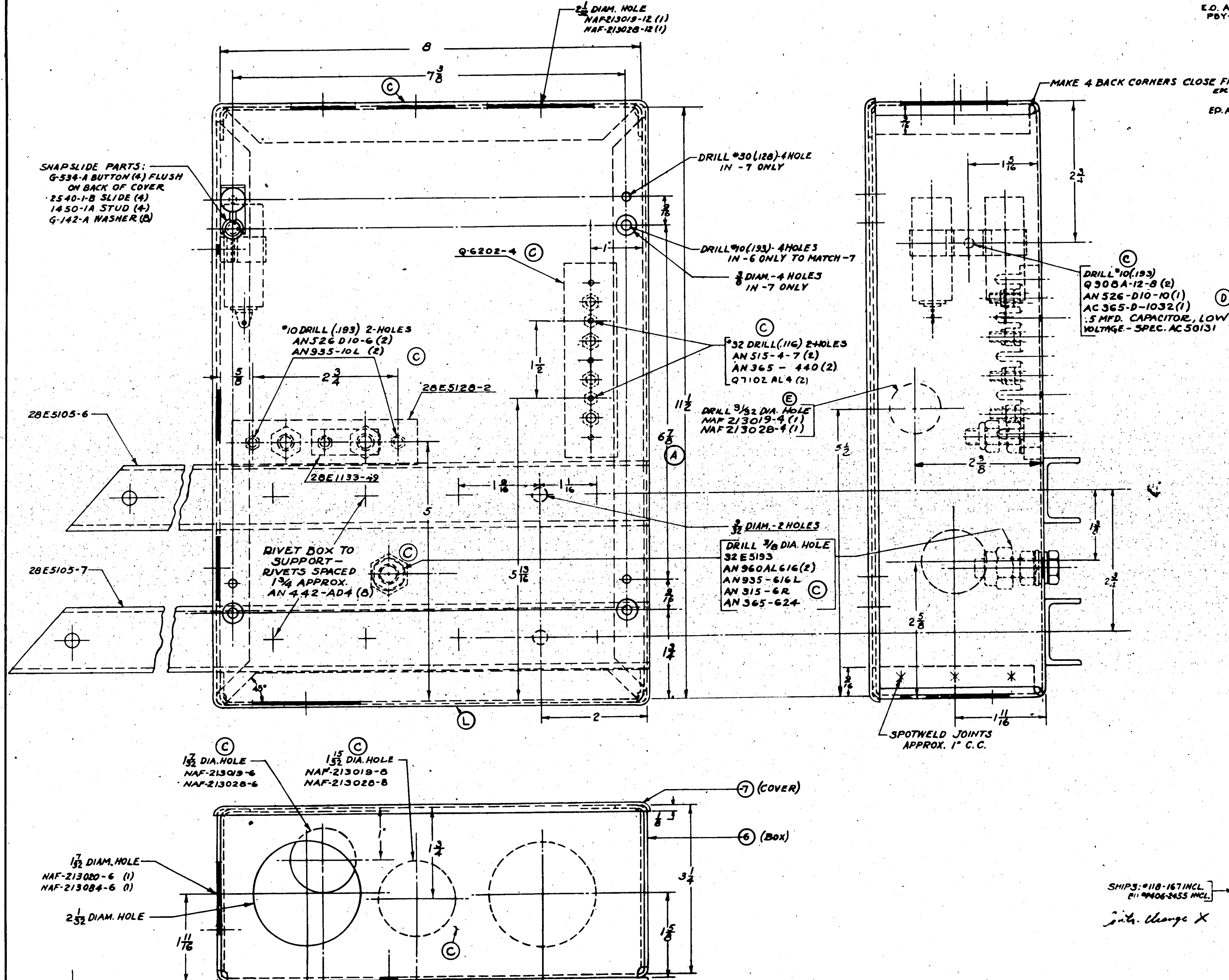

NOTES:-
FINISH: P INSIDE, P-A-P OTS.
REMOVE FINISH 3/32 RADIALLY AROUND HOLES

MOUNT SNAPSLIDE PARTS AFTER FINISH HAS BEEN APPLIED.

SNAPSLIDE PARTS OBTAINABLE FROM
AIRCRAFT RADIO CORP BOONTON, N.J.

ALL BEND & RELIEF RADII TO BE 1/8

PART No	STOCK	MATERIAL	SPEC	REQ -0
28E1133-49				1
AN960AL616				2
AN935-616L				1
AN935-10L				2
AN365-624				1
AN315-6R				1
AC365-440				2
AC365-D-1032				1
AN515-4-7				2
AN526-D10-6				2
AN526-D10-10				1
32E5193				1
Q7102AL4				2
Q6202-4				1
Q908A-12-8				2
AC50131-C	.5MFD. CAPACITOR, LOW VOLTAGE			2
AN-442-AD4				
NAF213028-4				1
NAF-213028-12				1
NAF-213019-12				1
NAF-213028-6				1
NAF-213020-6				1
NAF213019-4				1
G142A	SEE NOTE			8
1450-1A				4
2540-1-B				4
G534-A				4
28E5128-2				1
28E5105-7				1
28E5105-6				1
-7	.051X8 1/8X12	ALCLAD-2450	474A COND A	1
-6	.051X16X19 1/2	ALCLAD-2450	474B COND A	1

PARTS LIST PER ASSY.

SHIPS: #118-167 INCL. & #406-2455 INCL.

ASSY DASH No.	MODEL	NEXT ASSY	REQ
-0	PBY-5	28E5102-1	1

REQUIREMENTS PER AIRPLANE

REPLACES — 2.35 CALC. WT.

REPLACED BY — ACT. WT.

LIMIT ON DIMENSIONS UNLESS OTHERWISE SPECIFIED ± 1/32 & 1° — SCALE 12" = 1'0"

STAMP PART NUMBER WHERE SHOWN

Inth. Change X

✱ SPOTWELDING SYMBOL
THIS SYMBOL INDICATES SPOTWELDING RIVETS ARE NOT INDICATED ON THIS DRAWING BY SYMBOLS.

A C
NAVY SR-53 — NOTED
HEAT TREAT — FINISH
DRAFT: 3-12-41 — CHECK: Booher

NAME ASS'Y. - ELEC. (C) VOLTAGE CONTROL UNITS-BLKD'S

OPP HAND NONE

DWG SIZE G — 28E5104

CONSOLIDATED AIRCRAFT CORP. SAN DIEGO, CALIF.

LET	ALTERATION	DATE	BY
A	CHANGED NOTE TO READ "FOR 8 STRINGERS WAS 6TH & 7TH"	9-19-42	HOW
B	ON FAIL & B/M Q-808-D6-19 WAS Q-808-DA-19	7-12-44	[illegible]
C	CANCELED NAF 213017-9 & 213018-9 ON FACE & B/M, REPLACED WITH AN3058-8 (1) & AN3054-12 (1), IN B/M (ON FACE) NAF 213021-4-17 WAS NAF 213021-4-29, NAF 213021-6-18 WAS NAF 213021-4-32, NAF 213017-8 WAS NAF 213017-4, NAF 213018-8 WAS NAF 213018-9 & NAF 213021-6-31 WAS NAF 213021-6-29.		
D	ADDED -15 TO Q-908A-12 ON FACE & IN B.M. REPLACED "Q908A-12-8 (2)" WITH "Q908A-12 (1)" & "Q908A-15 (1)" & "Q908AA-A (2)" WITH "Q908A-8 (1), Q908A-10 (1), & Q908A-15 (1)" WT. CHG. NEG.	8-4-43 7-19-43	AGENA WRIGHT

E.C. A3169

E.C. A13088 PBY-5

PBY-5 E.O. A8716

28E5113 (REF.) SWITCH BOX

28E4011 (REF.) MAIN DIST. PNL.

(1/2 x .028 x 32, 1/2 H AL.AL TUBE)
Ⓒ NAF 2130.7-6 (1)
213020-4 (1)
213022-4 (2)

(3/4 x .032 x 32, 1/2 H. AL.AL. TUBE)
⑥ NAF 213017-6 (1)
213020-6 (1)
213022-6 (2)

36 (±4)

℄ OF SHIP

NAF 213021-4-17 (1)
Ⓒ AN 3052-8. (1)
AN 3054-12 (1)
AN 3106-22-3P (1)

AN-526 DD 1032-10 (4)
365 D 1032 (4)
960 D10 (4)

28E5109-6 (2). (LOCATE CENTERALLY ON 281400-104 & -109 (REF.)
DR. #9 (.196) 4 HOLES ON INST'N.
AN-526 DD 1032-20 (4)
365 D 1032 (4)
Q-808 D6-19 (4)

Ⓒ NAF 213021-6-31 (1)
213017-6 (2)
213018-6 (2)
AN 3106-22-15 (1)

Ⓑ (REF.)

AN-3108-22-3S

630X-2 (REGUL.)

NAF-213021-6-18 (1)
213017-6 (2)
Ⓒ 213018-6 (2)

802X-1 (DYN.)

AN-3108-22-3P

AN-526 DD 428-14 (4)
365 D 428 (4)
960 D6 (4)

Ⓐ 7TH & 8TH STRINGERS FROM ℄ OF SHIP (REF.)

28E1309-7 (2). (LOCATE CENTERALLY ON STRINGERS - REF.
DR. #F (.257) 4 HOLES ON INST'N.
AN-526 DD 428-20 (4)
365 D 428 (4)
Q-812 D8-19 (4)

VIEW LOOKING AFT. PORTSIDE BLK'D #4.

℄ STA. #4

Q-908A-12 (1)
AN-526 DD 1032-10 (1)
AN-365 D 1032 (1)
DR. #10 (.193) 1 HOLE ON INST'N.

Q-908A-8 (1)
AN-526 DD 1032-10 (1)
AN-365 D 1032 (1)
DR. #10 (.193) 1 HOLE ON INST'N.

Q-908A-10 (1)
AN-526 DD 1032-10 (1)
AN-365 D 1032 (1)
DR. #10 (.193) 1 HOLE ON INST'N.

Q-908A-15 (1)
AN-526 DD 1032-10 (1)
AN-365 D 1032 (1)
DR. #10 (.193) 1 HOLE ON INST'N.

Ⓓ Ⓑ

Q-908A-15 (1)
AN-526 DD 1032-10 (1)
AN-365 D 1032 (1)
DR. #10 (.193) 1 HOLE ON INST'N.

7 (±4)

C. 10496 118-167 ONLY

Cont. Change X

VIEW LOOKING OUTB'D.

NOTE:
1- FINISH CONDUIT & CLIPS WITH 1 COAT PRIME & 1 PIGMENTED COAT TO MATCH ADJACENT SURFACES.

ASSY DASH NO.	MODEL	NEXT ASSY	QTY
0	PBY-5	28E4018-800	1
0	PBY-5	28E4018-800	1

REQUIREMENTS PER AIRPLANE
REPLACES
REPLACED BY
LIST OF SUBASSYS SPARES OR SERVICE KITS: NIL & NOTED
SCALE: 3"=1'-0"
STAMP PART NUMBER WHERE SHOWN

PART NO	STOCK	MATERIAL	SPEC	LH REQ. -0	RH REQ. -2	LH REQ. -3	RH REQ. -4	LH REQ. -5	RH REQ. -6
802X-1	(DYNAMOTOR) G.F.E.			1					
630X-2	(REGULATOR) G.F.E.				1				
Q-908A-15					2				
Q-908A-10						1			
Q-908A-12							1		
Q-908A-8								1	
Q-812D8-19									1
Q-808D6-19									1
NAF 213021-4-31				1					
213021-4-17				1					
213021-6-18				2					
213017-6				2					
213022-4				1					
213020-6				1					
213018-6				4					
NAF 213017-6				6					
AN 3054-12					1				
AN 3052-8					1				
960 D10					4				
960 D6					4				
526 DD 1032-10					4				
526 DD 1032-20					4				
526 DD 428-20					4				
526 DD 428-14					4				
365 D 1032					4				
365 D 428					4				
AN 3108-22-3P				1					
AN 3108-22-3S	NAVY TREE PARTS MUST BE PURCHASED FROM CANNON ELEC. DEV. CO. L.A.			1					
AN 3106-22-15				1					
28E5107-7					1				
28E5109-6					1				
-8	1/8 x .028 x 32	ALCLAD	47AB-T						
-7	(1/8 x .028 x 32)								
-6	(3/4 x .032 x 32)								

PARTS LIST PER ASSY.

A C		GRISWOLD	Booher	BMR	
NAVY NONE	NOTED	8/24/43	3-25-43		
HEAT TREAT	FINISH	DRAFT	CHECK	STRUCT	MAT	APPROV	ENG

NAME INSTALL.- ELEC. DYNAMOTOR & REGULATOR
OPP. HAND NONE
CONSOLIDATED AIRCRAFT CORP. SAN DIEGO, CALIF.
DWG. G SIZE
28E5107

R

LET	ALTERATION	DATE	BY
A	#30(.1285) DIA.-2 HOLES WAS #28(.1471) 4 HOLES BOTTOM REAR	2-2-42	
B	AN251-1-6 W/AS AN237-8-8	6-2-42	

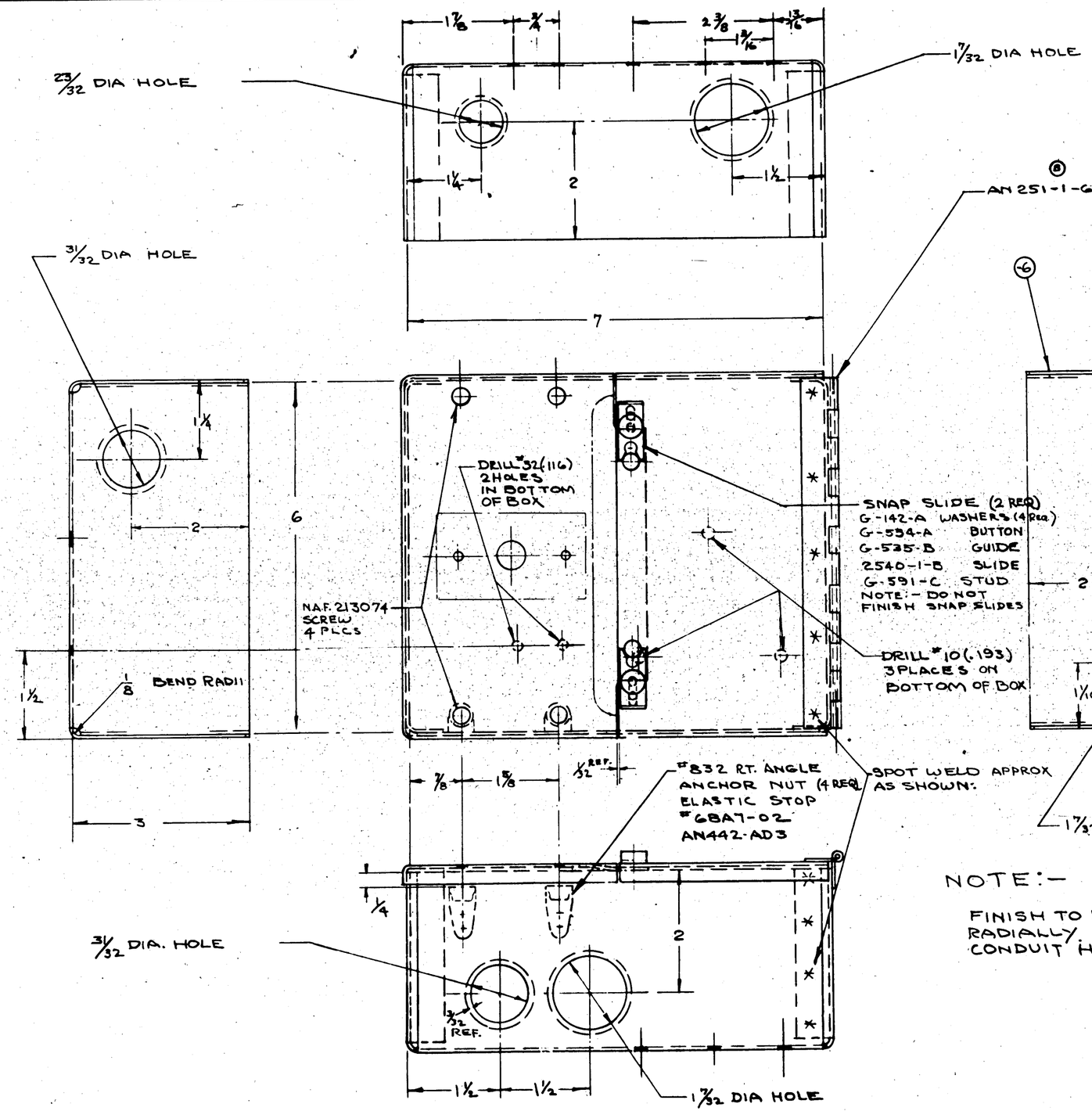

DETAIL OF COVER
SCALE 6"=1'-0"

NOTE:-

FINISH TO BE REMOVED 3/32 RADIALLY AROUND ALL CONDUIT HOLES

SHIPS 118 # ON

Cont. change X

PART NO	STOCK	MATERIAL	SPEC.	LH REQ. -0	RH REQ. -0	LH REQ. -2	RH REQ. -2	LH REQ. -3	RH REQ. -3	LH REQ. -4	RH REQ. -4	LH REQ. -5	RH REQ. -5
2540-1-B												2	
G-142-A												4	
G-534-A												2	
G-535-B												2	
G-591-C												2	
NAF 213074												4	
#832 RT ANGLE NUT ELASTIC STOP #6BA7-02												4	
AN251-1-6												1	
AN442-AD3												2	
-5	.05/27 x 8¾	ALC. 24ST	H-AB Comm't									1	
-7	.05/17 x 4½	ALC. 2430	H-AB Comm'l									1	
-4	.051 x 8¾ x 12½	ALC. 24ST	H-B Comm'l									1	

PARTS LIST PER ASSY.

ZERT Symbol No.	MODEL	NEXT ASSY.	REQ.
-0	PBY-5	28E5099	1

REQUIREMENTS PER AIRPLANE

REPLACES

REPLACED BY

Limit on Dimensions Unless Otherwise Specified: ± 1/32

SCALE 12"=1" ENLARGED

STAMP PART NUMBER WHERE SHOWN

✳ SPOTWELDING SYMBOL
THIS SYMBOL INDICATES SPOTWELDING RIVETS ARE NOT INDICATED ON THIS DRAWING BY SYMBOLS.

AC			DESIGNED	Booher		
NAVY NONE	P-2AL		DRAFT	3-4-41		
HEAT TREAT	FINISH		CHECK	STRUCT	MAT	APPROV ENG

NAME BOX-ELEC.-A.C. FUSE & SELECTOR SWITCH

CONSOLIDATED AIRCRAFT CORP. San Diego, Calif.

CAP. HAND NONE

SIZE G

DWG 28E5113

LET	ALTERATION	DATE	BY

L	ALTERATION	DATE	BY
A	0° MAX TO 5° MAX (SEE DWG 28E5131) & MIN TO 0° MIN (SEE DWG 28E5131)	6-2-42	MINTKEY
B	ADDED VELLUMOID GASKET. MAX -10 REINFORCED GASKET. (NOT USED ON THIS DWG)	6-2-42	E.A. MINTKEY
C	CHANGED -10 & -11 TO MATCH SHEAR RIVET HOLES IN SKIN AT CHANNEL (AS PER CHG)	6-2-42	E.A. MINTKEY

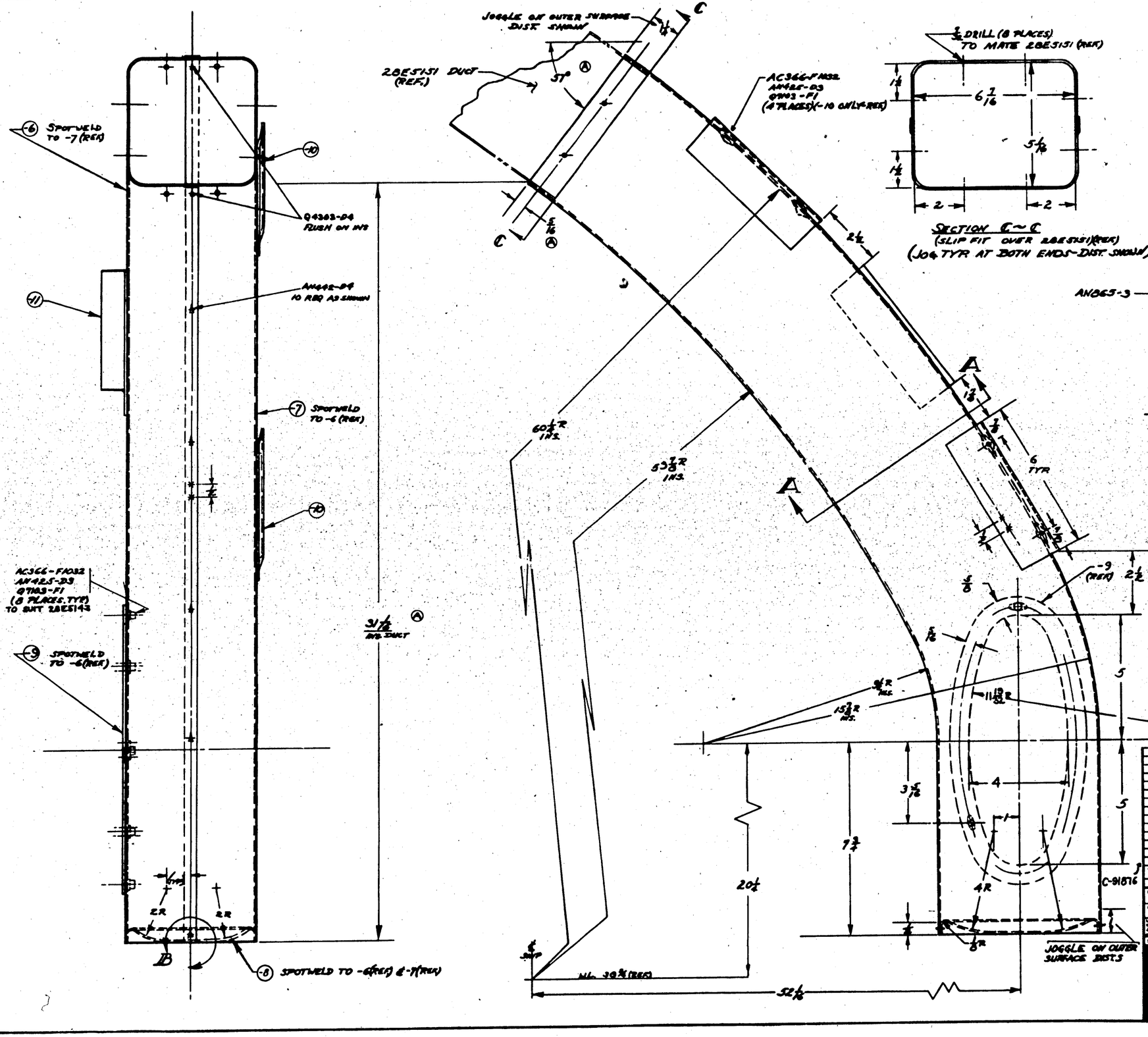

NOTE ~ EFFECTIVE ON CONTRACT 91876.

PART NO	STOCK	MATERIAL	SPEC.	LH REQ	RH REQ	LH REQ	RH REQ	LH REQ	RH REQ	LH REQ	RH REQ
PARTS LIST PER ASSY.				-0	-2	-3	-4	-5			
Q7103-F1											
Q4306-D4											
Q4303-D4											
AN425-D3											
AN442-D3											
AC366-F1032											
320-064	VELLUMOID GASKET										
-1	VGA-.047 X 6										
-10	.062 X 2 X 6	MC	AMS	4348-T							
-11	.062 X 2 X 31/32	MC	AMS	4348-T							
-8	.040 X 2 X 6	MC	AMS	4348-A							
-7	.040 X 2 X 6	MC	AMS	4348-A							
-6	.040 X 2 X 6	MC	AMS	4348-A							

PARTS	28E5148	1
ASSY DRAWING NO.	MODEL	NEXT ASSY
REQUIREMENTS PER AIRPLANE		
REPLACES		SPEC. NO.
REPLACED BY		ASS'Y.
SCALE 6"=1'-0"		
STAMP PART NUMBER WHERE SHOWN		

A.C.							
NAVY	28-5-1 ARCH	Σ-P-ZAP					
HEAT TREAT		FINISH	DRAFT	CHECK	STRUCT	MAT	ENG

NAME DUCT ASSY. - COOL AIR INLET - CENTER - AUX. POWER PLANT

CONSOLIDATED AIRCRAFT CORP. San Diego Calif

OPP. HAND DWG G DWG

28E5147

R

LET	ALTERATION	DATE	BY
C	REDRAWN TO DIMENSIONS.	6-8-42	TRANSFERRED

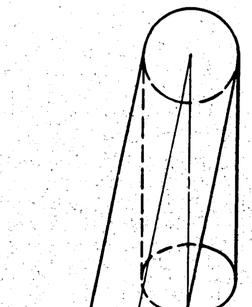

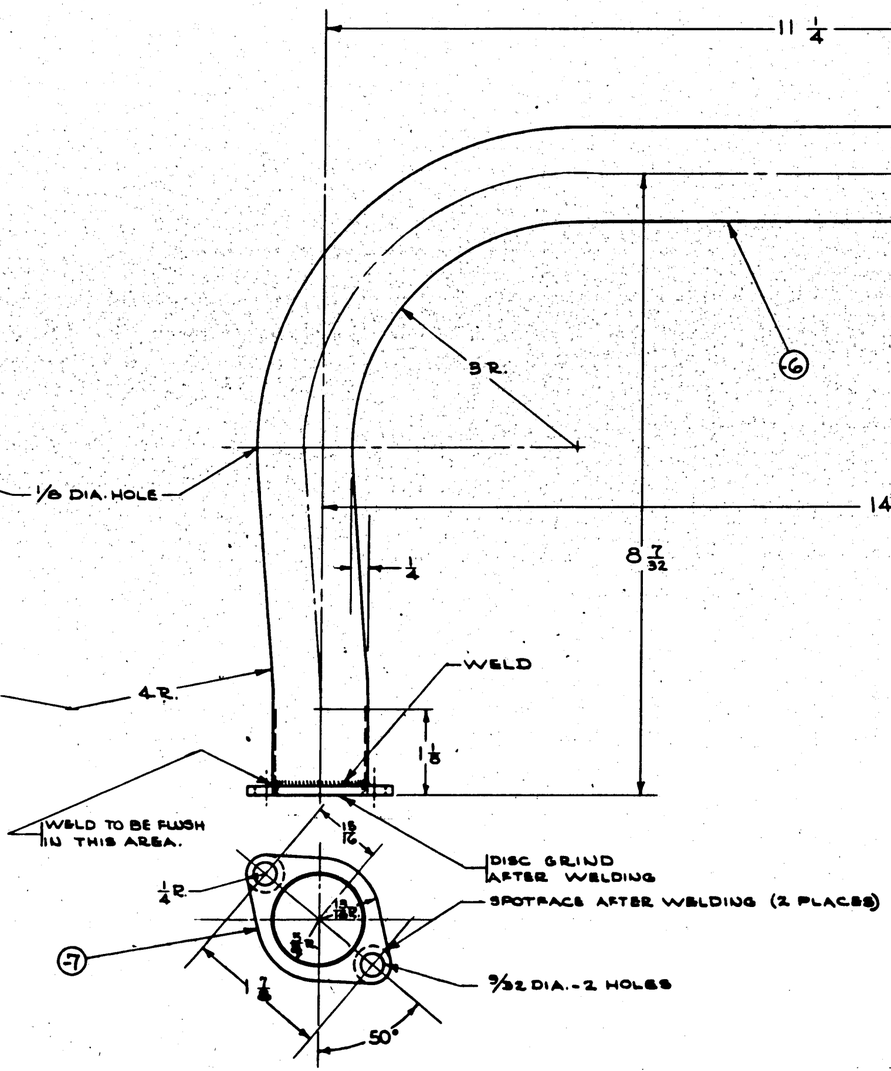

C-#91876

PAY-5	28E5144	
MODEL	NAVY ASSY. NO.	

REQUIREMENTS PER AIRPLANE

REPLACES 28E5149 -1 D. ENG. 10-2-942 DWG. NO.

REPLACED BY — ASY. NO.

LIST OF ENGINEERING RELEASE ON WHICH DRAWING IS BASED — SCALE 1/2, 1, 2, 4 AND TWO — 12" = 1'-0"

STAMP PART NUMBER WHERE SHOWN

-7 | 1.25 | 1.56 | 2 | Not St'l | 8 AT | AN-QQ-S-763
-9 | 1 1/4 O.D. | .058 | 2 | 21 ST'L TUBE | AN-WW-T-850

PART No	STOCK	MATERIAL	SPEC.	LH REQ.	RH REQ.	LH REQ.	RH REQ.	LH REQ.	RH REQ.
PARTS LIST FOR ASSY.				-0	-2	-3	-4	-8	

		Version	Form	Standard		Thick	Width
A.C. ANNEAL NAVY/AFTER WELD HEAT TREAT	SHOTBLAST & PASSIVATE FINISH	7-3-42 DRAFT	CHECK	STRUCT	MAT	3-15-43 APPROV	2-17 ENG.

NAME TUBE ASS'Y.-OUTLET DUCT-LOWER.-AUX. P.P.

CONSOLIDATED AIRCRAFT CORP. San Diego, Calif.

SIZE G — DWG. NO. 28E5149

R

LET	ALTERATION	DATE	BY

LET	ALTERATION	DATE	BY
A	- A-3400.K05A X 1¾ (7ST, 44T21-T(2): WAS - 6¾ OD X 032 X 1¾ AL. AL. 24ST.(2) AN960-AL416(2): WAS AN960-D216(2), RU-223 ⅜ I.D. X ½ OD X 1¾ RUBBER TUBE: WAS RUBR ⅜ I.D. X ½ OD X 1¾ RUBBER TUBE AN4-37A WAS AN4-20A WT. CHG. NEG	4-15-42	SMITH

PLAN VIEW
SCALE 3"=1'-0"

VIEW A-A

VIEW B-B

VIEW D-D

VIEW C-C
ROTATED 90°
(SHOWING DOOR IN ALTERNATE POSITION)

VIEW E-E

SECTION X-X

PART No	STOCK	MATERIAL	SPEC.	LH RH REQ. -0	LH RH REQ. -2	LH RH REQ. -3	LH RH REQ. -4	LH RH REQ. -5
RU-223	Watertight ½ RUBBER TUBE							
AN364-D10								
AN960-AL416								
AN960-C2-2								
AN320-3								
AN23-10								
AN23-8								
AN4-37A								
AC364-428								
28E5153								
-1								
-2								
-3								
-4								
28E5150-A	4-1/2 OD X 1/16 THKS	17ST	44T21-T					

PARTS LIST PER ASSY.

C-91876 — PBY-5 | 28E5144 | 1

LAST DASH No.	MODEL	NEXT ASSY USED
REQUIREMENTS PER AIRPLANE		
REPLACED		SHT. QTY.
REPLACED BY		ACT. QTY.

LIST OF DECIMALS UNLESS OTHERWISE DESIGNATED: ± 1/32

SCALE: FULL 1/2 1/4 1/8 1/16 1/32 1/64 — 1"=1'-0" — 3"=1'-0" — MIXED

STAMP PART NUMBER WHERE SHOWN

A.C.			MATERIAL	ENGR.		ARCH'L
NAVY NONE			DUPLICATE		A.L.	ENGR'G
HEAT TREAT	FINISH		DRAFT	CHECK	STRUCT	WAT

NAME DOOR ASSEM.-AUX. P.P. COOLING AIR INLET DUCT

CONSOLIDATED AIRCRAFT CORP. SAN DIEGO, CALIF.

OPP. HAND —

SIZE G — DWG 28E5150

R

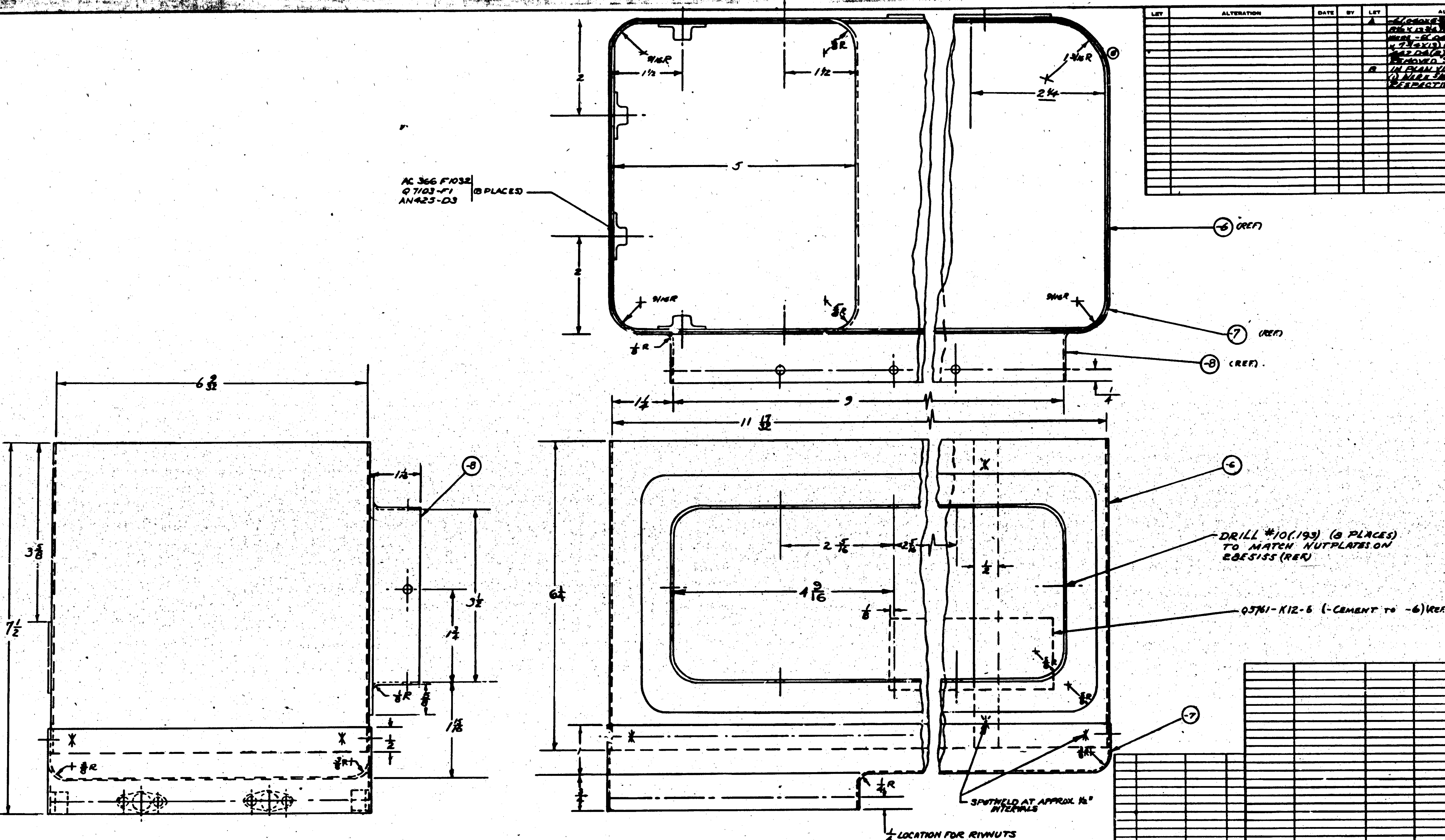

LET	ALTERATION	DATE	BY	LET	ALTERATION	DATE	BY
				A	[illegible]		
					[illegible] REMOVED AN		
					[illegible]		
					REMOVED SECT. A-A [illegible]		
				B	IN PLAN VIEW [illegible]		
					[illegible]		
					RESPECTIVELY [illegible]		

C. 91876 —

ASSY. DASH NO.	MODEL	NEXT ASSY.	NO.
	PBY-5	[illegible]	1

REQUIREMENTS PER AIRPLANE

REPLACES — CALC. WT.

REPLACED BY — ACT. WT.

SCALE: 12"/1.0"

STAMP PART NUMBER WHERE SHOWN

PART No		MATERIAL	SPEC	-0 REQ.	-2 REQ.	-3 REQ.	-4 REQ.	-5 REQ.
Q5761-K12-6				1				
Q7103-F1				8				
AN425-D3								
AC366-F1032				8				
-8	.040 x 6 x 12 [illegible]	AC 24SO	47AB-A	1				
-7	.040 [illegible]	AC 2S½H	47AB-A	1				
-6	.040 x 6 [illegible]	AC 24ST	47AB-T	1				

PARTS LIST PER ASSY.

AC

NAVY SR-53

HEAT TREAT

Z-P-2AP

FINISH

DRAFT — CHECK — STRUCT — MAT — APPROV — ENG.

OPP. HAND

NAME DUCT-UPPER-COOL AIR INLET-AUX. POWER PLANT

DWG. G SIZE

28E5151

CONSOLIDATED AIRCRAFT CORP. SAN DIEGO, CALIF.

R

✱ SPOTWELDING SYMBOL

THIS SYMBOL INDICATES SPOTWELDING RIVETS ARE NOT INDICATED ON THIS DRAWING BY SYMBOLS.

LET	ALTERATION	DATE	BY
A	ADDED DIMS. 7/16, 9, & 1 1/4 R & HORIZONTAL BEAM, REPLACES VERTICAL.		
	-8 MAT. 040 X 11 X 15 IS WAS 040 X 10 X 13 -7 MAT.		
	040 X 8 1/2 X 20 1/2 WAS .040 X 9 1/2 X 18 WT. CHG. REQ.	6-10-42	LEWIS
B	-8 MAT'L (.040 X 8 1/2 X 20 1/2) WAS (.040 X 11 X 15) -7		
	(.040 X 11 X 18) WAS (.040 X 8 1/2 X 20 1/2) NO WT. CHG.	6-29-42	LEWIS

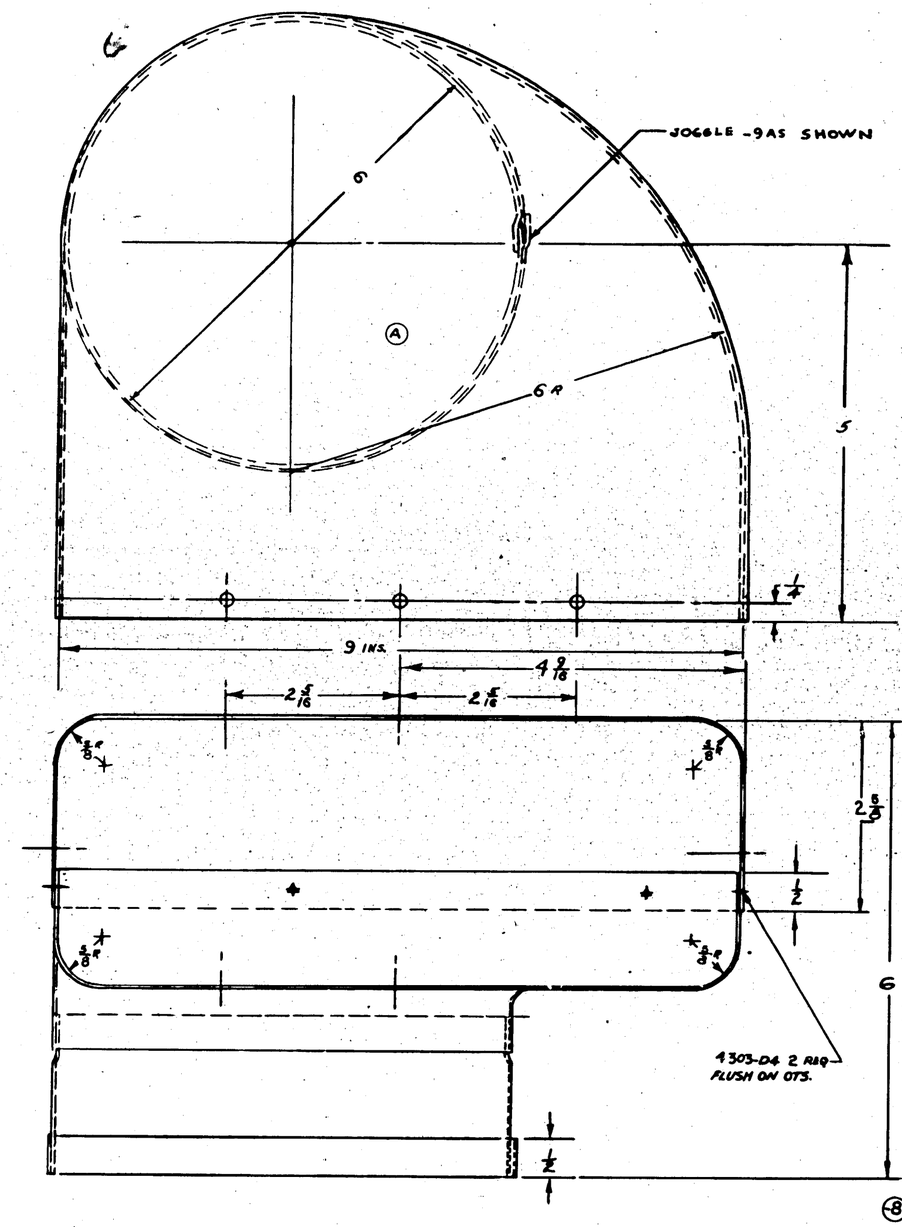

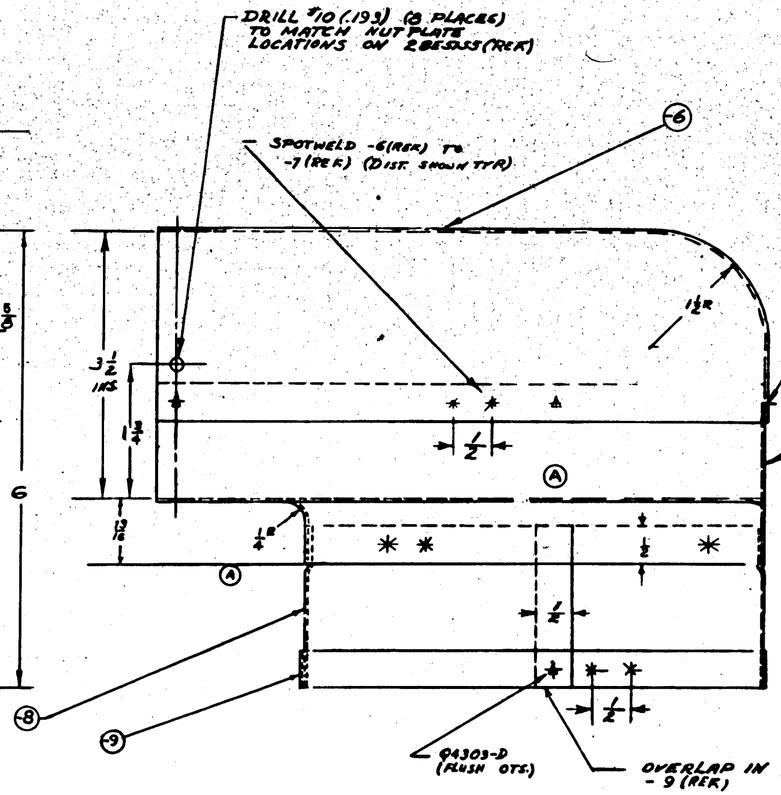

NOTE ~
ALL SPOTWELD SPACING APPROX. 1/2".

C.81876

PART NO	STOCK	MATERIAL	SPEC	LH REQ.	RH REQ.	LH REQ.	RH REQ.	LH REQ.	RH REQ.
				-0	-2	-3	-4	-5	
-9	.040 X 9 1/2 X 18	ALC. 2157	4TA6 - T						
-8	.040 X 8 1/2 X 20 1/2	ALC. 2450	4TA6 - A						
-7	.040 X 11 X 15	ALC. 2450	4TA6 - A						
-6	.040 X 11 X 18	ALC. 2450	4TA6 - A						

PARTS LIST PER ASSY.

AN442-D4
94303-D4

REQUIREMENTS PER AIRPLANE

REPLACED	QUAN. PER
REPLACED BY	ASSY. QTY.

DRAWN	CHECKED	STRUCT	STAT	APPROVED	ENG
Wynne Kent		A.L.	2-19-42	2-19	

AC				
AN-53 NAVY-C-7 (REF.)	Z-P-2AP	1-30-42		Pachl Weld
HEAT TREAT	FINISH	DRAFT	CHECK	STRUCT

NAME OUTLET DUCT-UPPER — AUX. POWER PLANT
CONSOLIDATED AIRCRAFT CORP. San Diego, Calif.

OPP. HAND
DWG. G
DWG. 28E5163

R

LET	ALTERATION	DATE	BY
A	REVOLVED LAP JOINTS 90° NC WT. CHG.	6-9-42	

SECTION B~B
JOGGLE ON INS. (NOTED DIST.)

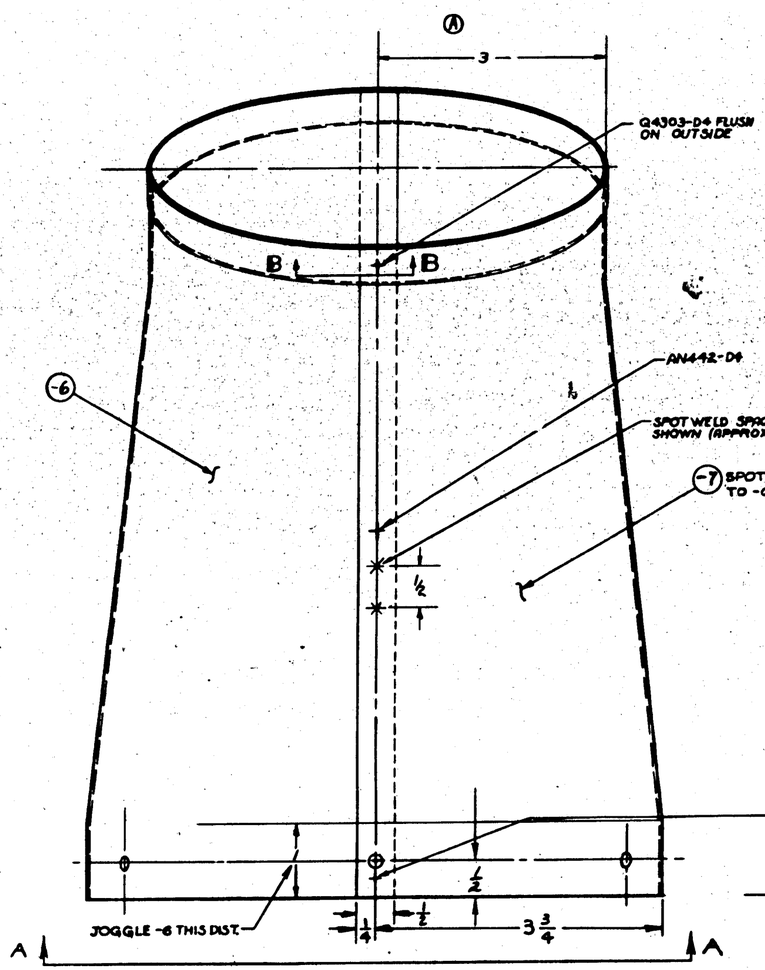

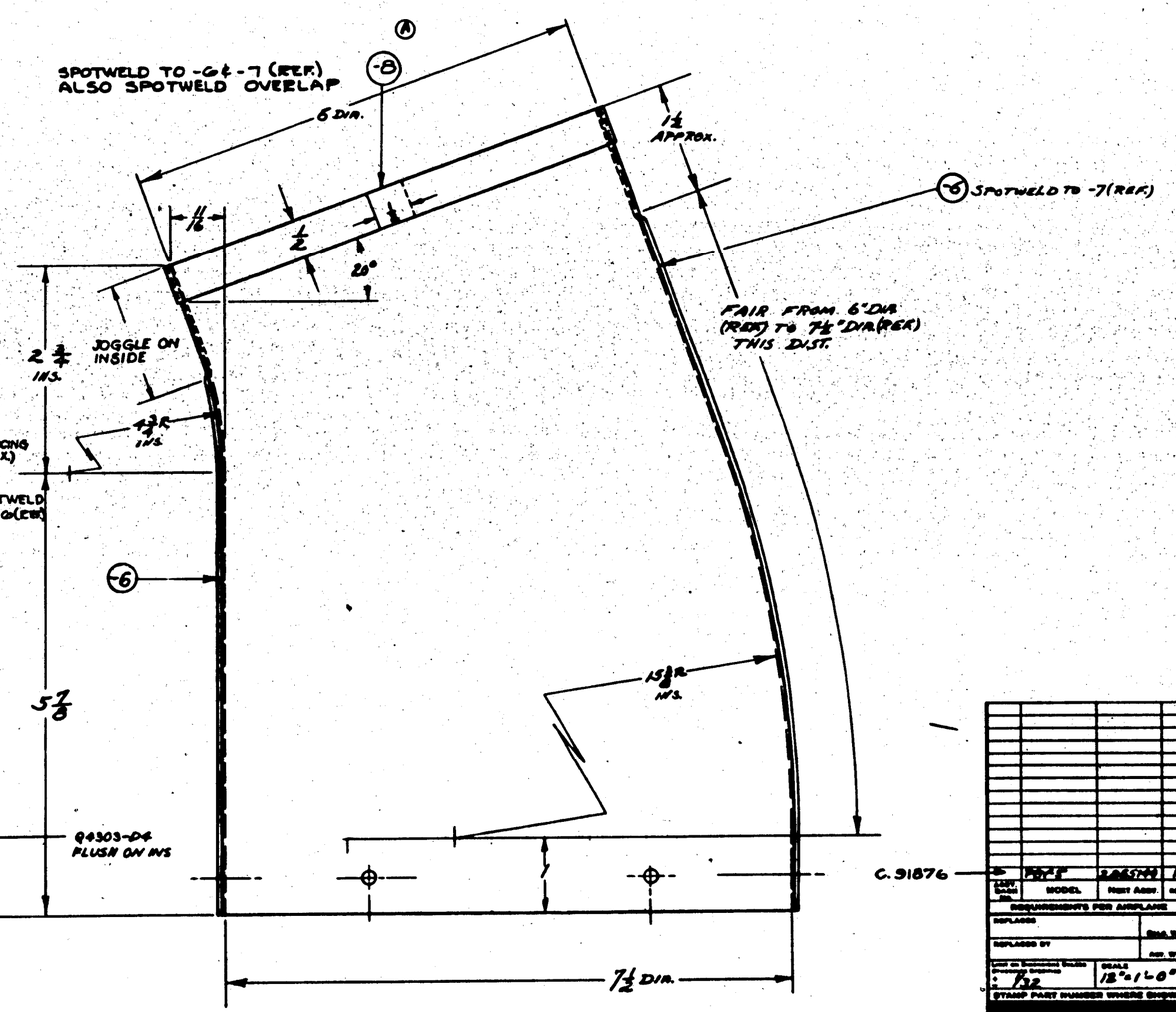

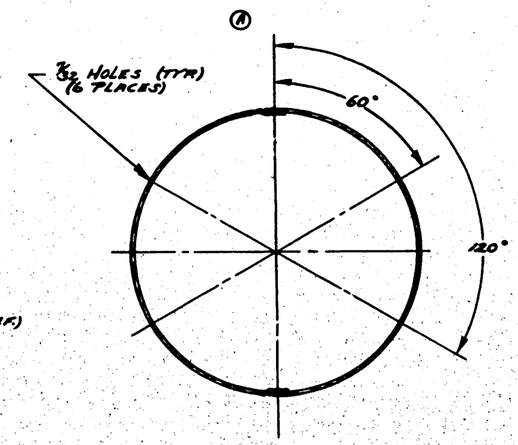

VIEW A~A
SHOWING HOLE LOCATIONS
SCALE 6"=1'-0"

✱ SPOTWELDING SYMBOL
THIS SYMBOL INDICATES SPOTWELDING RIVETS ARE NOT INDICATED ON THIS DRAWING BY SYMBOLS.

AN442-D4
Q4303-D4

PART NO.	STOCK	MATERIAL	SPEC.	LH REQ.	RH REQ.	LH REQ.	RH REQ.	LH REQ.	RH REQ.	LH REQ.	RH REQ.
PARTS LIST PER ASSY.				-0		-2		-3		-4	-5
-0	.040 x 19	ALC 24ST	47AA-T	A							
-2	.040 x 12 X 13	ALC 24SA	47AA-A	A							
-3	.040 x 13 X 15	ALC 24SA	47AA-A	A							

A C		Approved	
NAVY	2-P-AP	Checked	
HEAT TREAT	FINISH	DRAFT	

NAME OUTLET DUCT-CENTER - AUX. POWER PLANT
CONSOLIDATED AIRCRAFT CORP. San Diego, Calif.
DWG. G 28E5164
R

LET	ALTERATION	DATE	BY
A	AC165-D1032 WAS AC366-DF-1032 WT CHG NIC	4-3-42	
B	(IN BOM FOR -6 REPLACED "K1288 X 18½ 24ST AL AL. 4643-T" WITH "Y-6-A26RT X 18½" FOR -7 REPLACED "K14040 X 6⅝ 24ST AL AL 4643-T WITH "Y-36-A7RT X 6⅝" FOR -8 & -9 REPLACED "K14040 X 6 24ST AL AL 4643-T" WITH "Y-36-A7RT X 6" NOTES "Y-36-A7RT X 6" (WT. CHG. REQ.)	11-2-43	CM GANT
C	ADD NOTE - DRILL #10 (.193) 8 HOLES (AC5104-D10-8 (8 PLACES) AC372-D10-8 (8 PLACES)) REPLACES (AN442-8D4 (8 PLACES)) WT. CHG. REQ.	2-26-44	
D	IN BOM REMOVED "Y-6-A26RT X 18½" FOR -6, "Y-36-A7RT X 6⅝" FOR -7, "Y-36-A7AT X 6" FOR -8, (Y-36-A7AT 18" FOR -8 & REPLACED WITH "NOTED" ADDED NOTES "1, "2 & "3. NO WT. CHG.	3-24-44	LARSEN

TOP VIEW

FORWARD

$18\frac{1}{2}$ (REF)

9 (REF)

288019-67 (REF)

45°

⑥ (REF) SYMMETRICAL

$1\frac{1}{8}$

DETAIL "A-A"

℄ OF SHIP

NOTES:

Ⓓ 1- MATERIAL FOR -6 MAY BE:
(A) Y-6-A26RT X $18\frac{1}{2}$, OR
(B) K1288 X $18\frac{1}{2}$, AL AL EXTR., SPEC QQ-A-354-T.
2- MATERIAL FOR -7 MAY BE:
(A) Y-36-A7RT X $6\frac{5}{8}$, OR
(B) K14040 X $6\frac{5}{8}$, AL AL EXTR., SPEC QQ-A-354-T.
3- MATERIAL -8 & -9 MAY BE:
(A) Y-36-A7RT X 6, OR
(B) K14040 X 6, AL AL EXTR., SPEC QQ-A-354-T.

288019-35 (REF)

$1\frac{7}{16}$

DRILL #10 (.193) 8 HOLES
AC5104-D10-8 (8 PLACES) Ⓒ
AC372-D10-8 (8 PLACES)

⑨

⑧

288019-67 (REF)

Ⓐ AN425AD3
AC366-D1032 (2)
#10 (.193) 2 HOLES
DRILL TO MATCH
28E5759

$4\frac{3}{8}$ (REF)

$5\frac{7}{8}$

$3\frac{3}{4}$ (REF)

288019-39 (REF)

#10 (.193) 4 HOLES
DRILL TO MATCH TYPE
S666 INVERTER
AC366DF1032 (4)
AN425AD3

⑦

⑥

A A

$1\frac{1}{2}$

$\frac{1}{2}$

$3\frac{1}{4}$

$2\frac{7}{16}$

$\frac{5}{16}$

3

4

$7\frac{1}{4}$

$10\frac{1}{8}$ (REF)

$\frac{5}{16}$

$\frac{5}{8}$

$1\frac{1}{16}$

$\frac{1}{2}$

288019-53 (REF)

CONT. 91876

AFT PORT SIDE SUPPORT UNDER PILOTS SEAT
VIEW LOOKING FORWARD

PART NO	STOCK	MATERIAL	SPEC.	-0 REQ.	-2 REQ.	-3 REQ.	-4 REQ.	-8 REQ.
-9	AN425AD3 NOTED AC366-D1032	NOTED	NOTED	-				
-12 SUB ASSY -8	AN425AD3 NOTED AC366DF1032	NOTED	NOTED		1			
-11 SUB ASSY -7	AN425AD3 NOTED AC366DF1032	NOTED	NOTED			1		
-10 SUB ASSY	AC366DF1032 AC5104-D10-8 AC372-D1032						6	8
-11 SUB ASSY								
-12 SUB ASSY								
-10 SUB ASSY -6	NOTED	NOTED	NOTED					

PARTS LIST PER ASSY.

Q	PBY-5	28E5172	1
USED ON	MODEL	PRINT ASSY. NO.	

REQUIREMENTS PER AIRPLANE

REPLACES — SHIP. WT.

REPLACED BY — ASY. QTY.

SCALE: 1/32 — 12" = 1'-0"

STAMP PART NUMBER WHERE SHOWN

A C — 2-3-42 — DRAWN

NAVY NONE — Z-P-AP — MOORE — 3-6-42 — CHECKED

HEAT TREAT — FINISH — DRAFT — STRESS — STRUCT — MAT — PROCESS — ENG

NAME: INSTALLATION - ELEC-
INVERTER MOUNTING BRACKET

CONSOLIDATED AIRCRAFT CORP. SAN DIEGO, CALIF.

OPP. HAND: NONE

DWG. G — SIZE — 28E5171

B 11/15/43

LET	ALTERATION	DATE	BY	LET	ALTERATION	DATE	BY

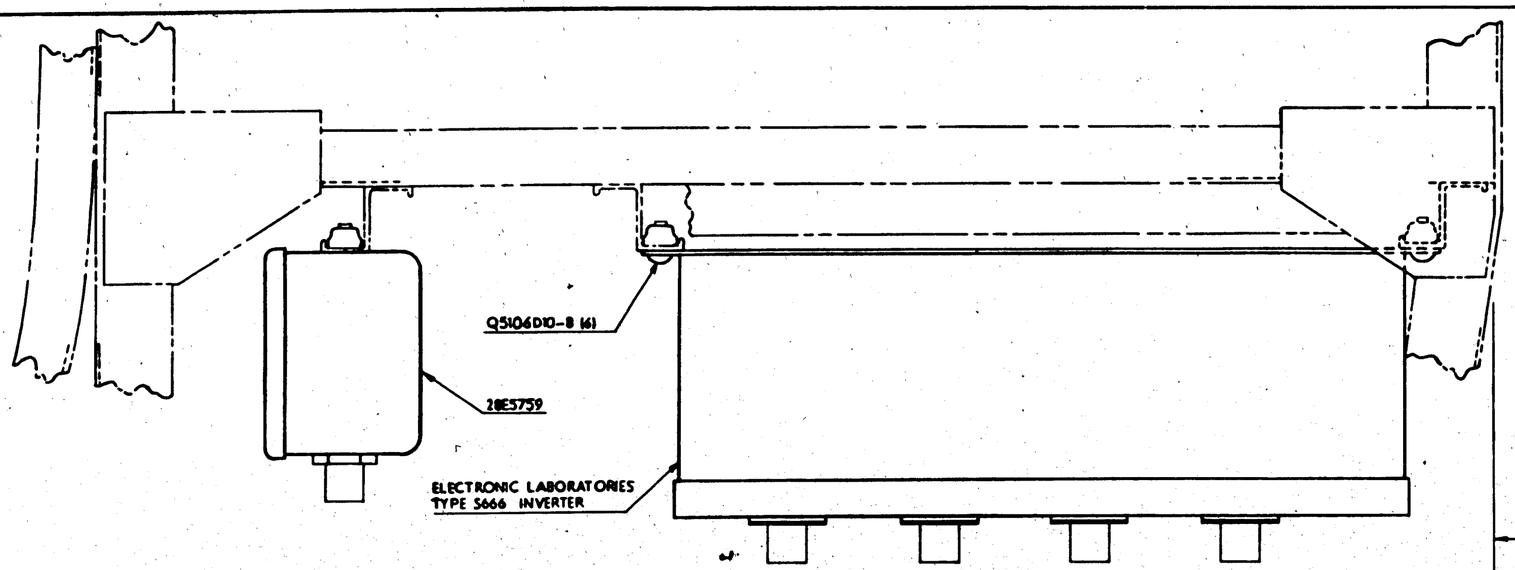

TOP VIEW LOOKING DOWN

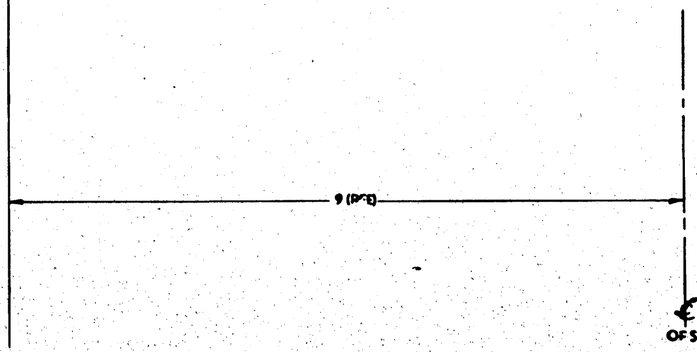

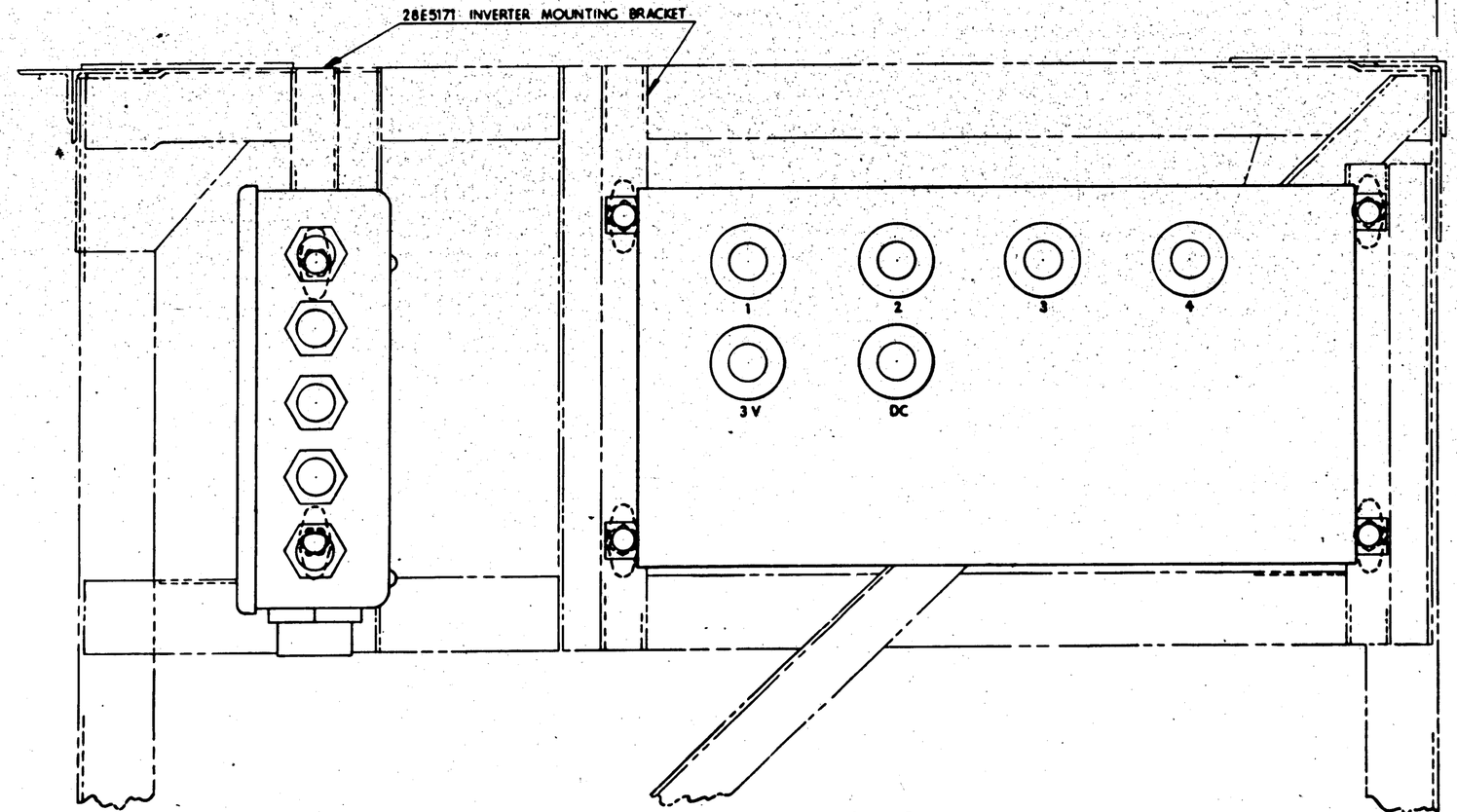

AFT VIEW LOOKING FORWARD UNDER PILOT'S SEAT

CONT. 91876

-0	PBY-5	28E5728	1	ELEC. LAB TYPE S666 INVERTER			1				
ASSY DASH NO.	MODEL	NEXT ASSY	USED	Q5106D10-8			6				
REQUIREMENTS PER AIRPLANE				28E5171							
REPLACES		CALC. QTY		28E5759	BOX & COVER						
REPLACED BY		ADV. QTY		PART No	STOCK	MATERIAL	SPEC	LH Bm REQ	LH Stn REQ	LH Stn REQ	LH Stn REQ	RH Stn REQ
L OUT ON ENGINEERING DRAWING DRAWING NUMBER	SCALE				PARTS LIST PER ASSY			-0	-2	-3	-4	-5
- V32	12" TO"			A C			2-3-42					
STAMP PART NUMBER WHERE SHOWN				NAVY NONE	NONE		MOORE					
				HEAT TREAT	FINISH		DRAFT	CHECK	STRUCT	MAT	APPROV	ENG

NAME INSTALLATION - ELEC. - OPP HAND NONE

FLUORESCENT LIGHTING INVERTER & JUNCTION BOX

CONSOLIDATED AIRCRAFT CORP. San Diego Calif.

DWG G | 28E5172

R

LET	ALTERATION	DATE	BY
A	ADDED AN3068-24 (VIEW "A") MAP 213017-12 (2) WAS (1) MAP 213033-12 (2) WAS (1) (WT CHG NEG)	6-3-92	BENTLEY
B	REVISED FLEX. & PLUG ARRANGEMENT (WT. CHG NEG)	6-3-92	BENTLEY
C	1/2-6 1/2 OD X .035 AL TUBE WAS 1 1/2 OD X .042 AL TUBE (NEG WT. CHG)	7-6-92	
D	CREATED -2 FOR P&F-3 "90 ONLY. NO WT. CHG.	8-10-92	
E	Q908A2T WAS Q908A8-28 & Q908A-12 WAS Q908A8-12 WT. CHG. NEG.	8-6-93	

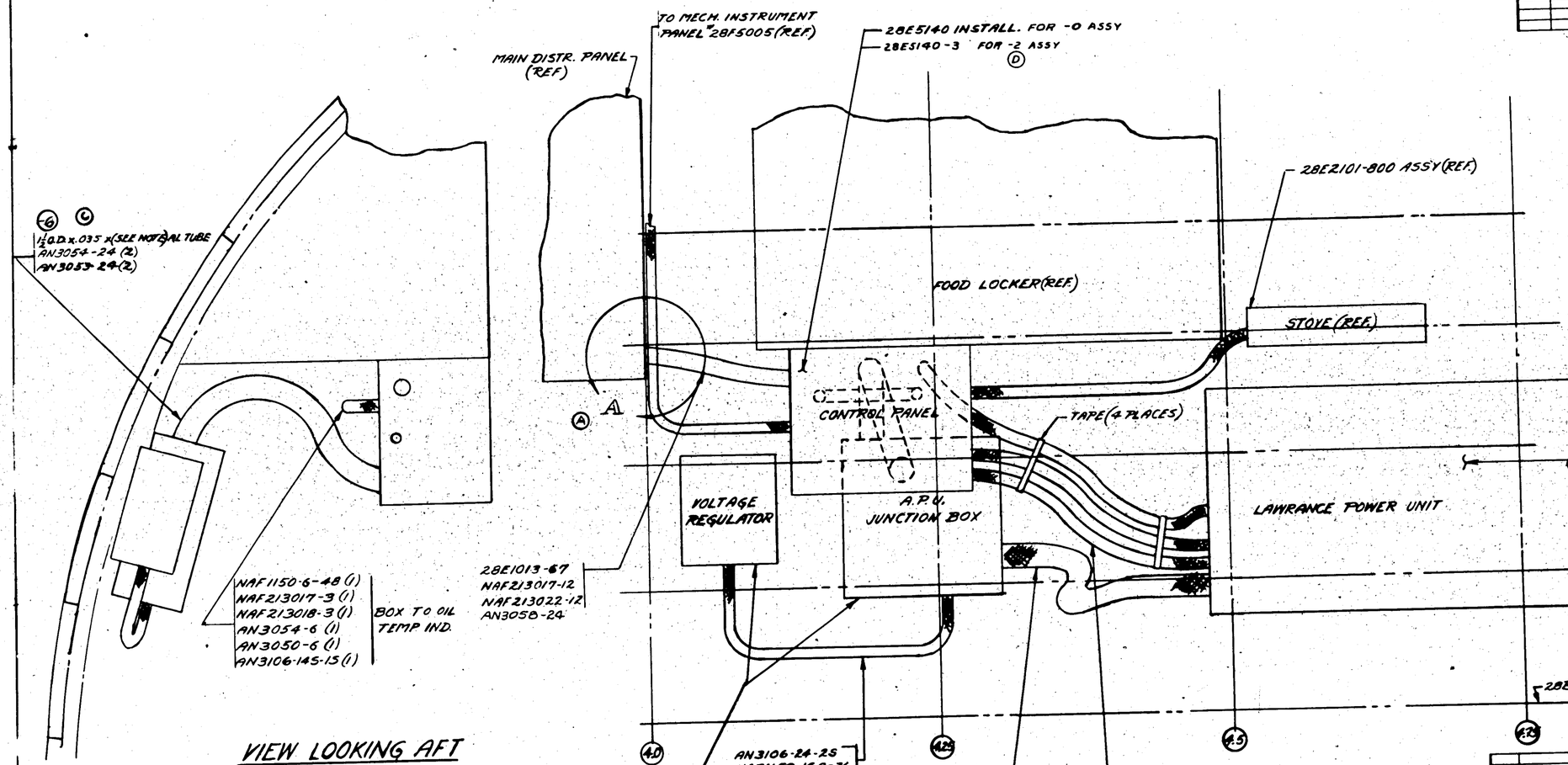

NOTES:
2 - SPEC - ALL RIGID CONDUIT IS 44719
FINISH - ALL RIGID CONDUIT: PAP OUTSIDE ONLY
ALL FLEX CONDUIT: NO FINISH
ON BOXES & CLIPS STAKE NUTS TO LOCK WHERE LWASHERS ARE NOT CALLED FOR
KEEP COUPLING THREADS FREE FROM PAINT & COAT WITH COMPOUND OF ZINC DUST & PETROLATUM 50% BY WT EACH
FOR OTHER NOTES SEE 28E1013

VIEW LOOKING AFT

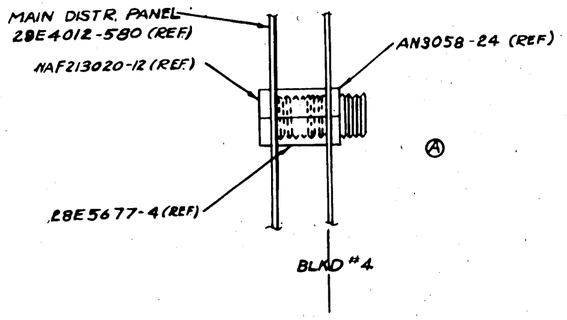

VIEW A
SCALE: 12"=1'0"

VIEW LOOKING OUTBD

FWD

NOTE:-
LENGTH OF CONDUIT TO BE DETERMINED ON FIRST INSTALLATION. NOTIFY ENGINEERING ON COMPLETING LENGTH REQUIREMENTS

28E5140-3									
NAF1150-10-160	1	1							
Q908A-12	2	2							
Q908A-2T	2	2							
Q5106D10-12	4	4							
NAF213022-12	2	2							
NAF1150-24A-240	1	1							
NAF1150-16A-76	1	1							
NAF1150-6-48	1	1							
NAF1150-10-156	1	1							
NAF1150-6-160	1	1							
NAF213018-5	2	2							
NAF213018-3	1	1							
NAF213018-2	2	2							
NAF213017-5	1	1							
NAF213017-3	1	1							
NAF213017-2	1	1							
NAF213017-12	2	2							
AC365DD1032	4	4							
AN3053-24	2	2							
AN3054-24	2	2							
AN3054-10	2	2							
AN3054-6	1	1							
AN3054-4	2	2							
AN3050-10	1	1							
AN3050-6	1	1							
AN3050-4	1	1							
AN3108-36-33	1	1							
AN3108-18S-33	1	1							
AN3106-18-3S	1	1							
AN3106-18-3S	1	1							
AN3106-18-2P	1	1							
AN3106-24-25	1	1							
AN3058-24	1	1							
28E5176	1	1							
28E5144	1	1							
28E5140	1	1							
28E1013-67	1	1							

-2	P&F-5	28E1013	1
-0	P&F-5	28E1013	1
ASSY DASH NO.	MODEL	NEXT ASSY	REQ.

REQUIREMENTS PER AIRPLANE

REPLACES

REPLACED BY

CALC WT.

ACT WT.

LIST ON DISCONNECTING SYS. DRG. DISCONNECTING DIAGRAM

SCALE 3"=1'-0" APP

STAMP PART NUMBER WHERE SHOWN

PART NO	-5	STOCK	1/2 OD x .035 (NAF) AL. AL.	MATERIAL	NOTED	SPEC	LH REQ.	RH REQ.	LH REQ.	RH REQ.	LH REQ.	RH REQ.	LH REQ.	RH REQ.
							-0		-2		-3		-4	-5

PARTS LIST PER ASSY.

A C		DRAFTED CARLSON 6-3-92	CHECKED BROWN 6-3-92
NAVY NONE	NOTED	DESIGNED CARLSON 6-3-92	STRESS BROWN 6-3-92
HEAT TREAT	FINISH	DRAFT	CHECK	STRUCT	MAT	APPROVED	ENG

NAME CONDUIT INSTALL-ELEC
LAWRANCE POWER UNIT
CONSOLIDATED AIRCRAFT CORP. San Diego Calif

OPP HAND

DWG G 28E5175

SIZE

R

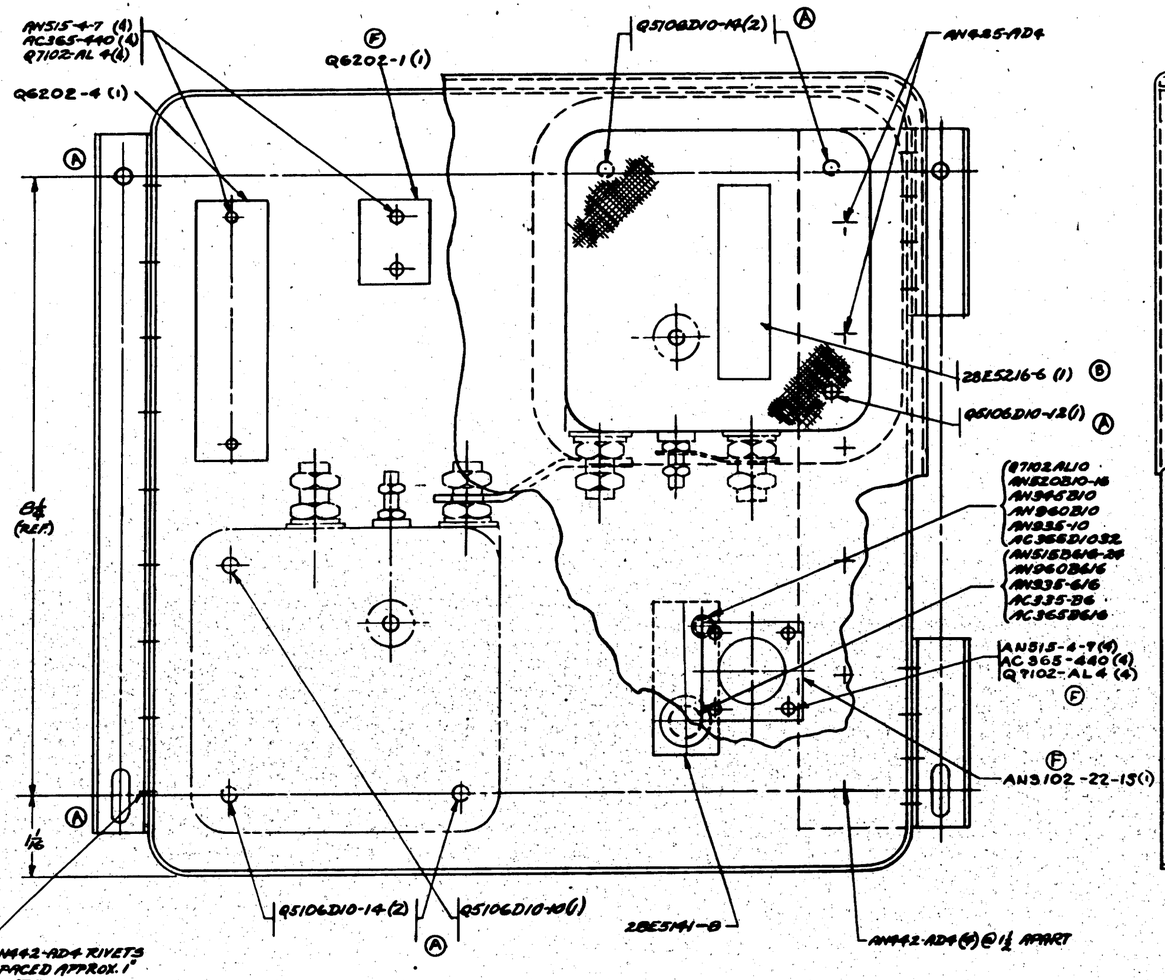

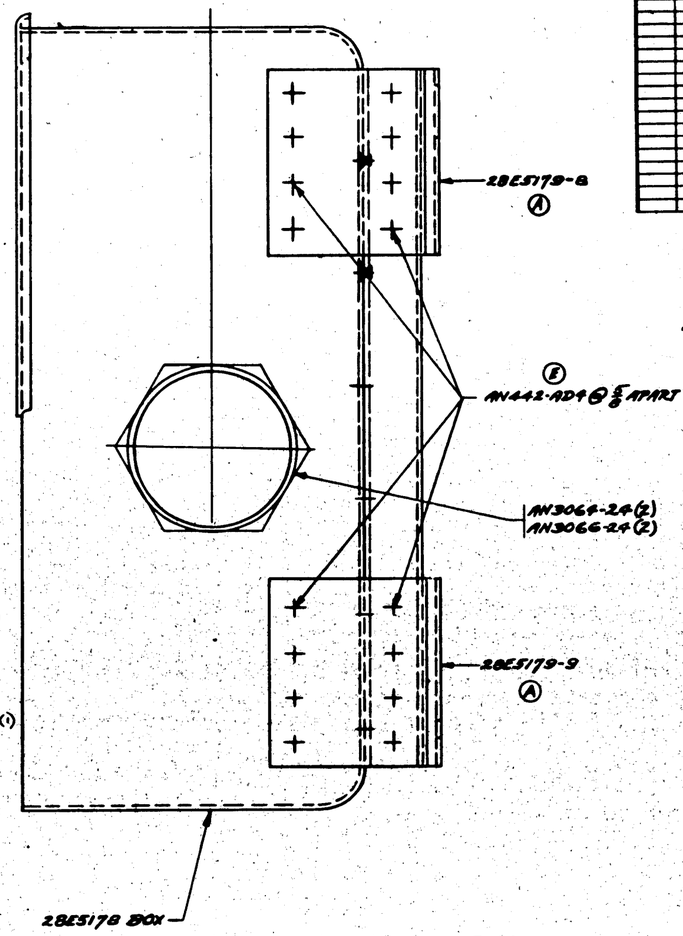

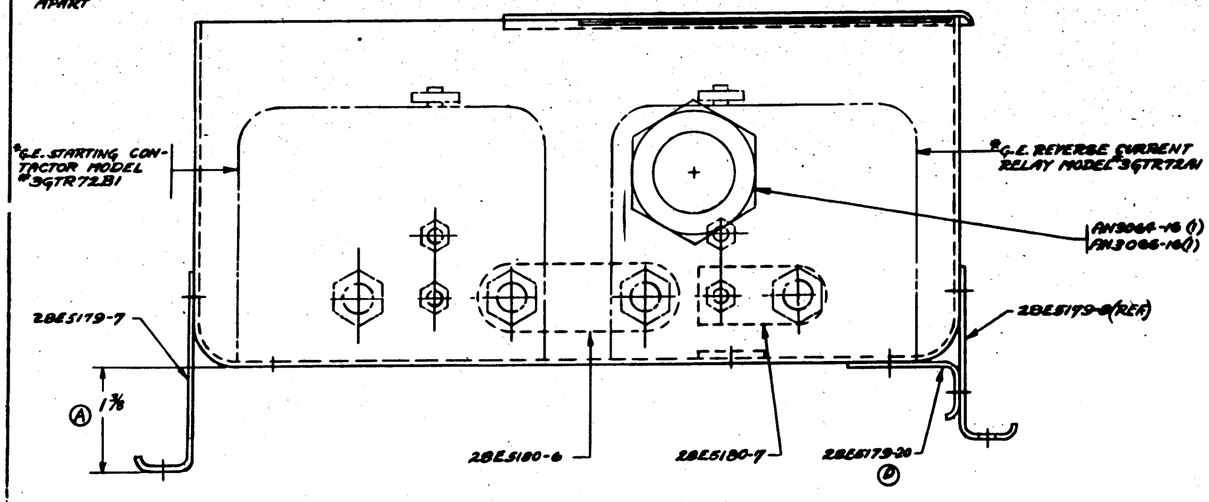

NOTE:
1.- SHELLAC 28E5216-6 TO INSIDE OF COVER 28E5178-B & COVER WITH SHELLAC.

Ⓖ
2.- IT IS PERMISSIBLE TO USE THE FOLLOWING PARTS AS ALTERNATES -

AC 335-6	TO REPLACE	AC 335-B6
AC 365 616	TO REPLACE	AC 365-B616
AN 345 10	TO REPLACE	AN 345-B10
AN 515 616-24	TO REPLACE	AN 515-B616-24
AN 960 616	TO REPLACE	AN 960-B616
AN 960 10	TO REPLACE	AN 960-B10

Ⓗ AN520-10-16 TO REPLACE AN520-B10-16

CONTRACT #1076 #1-90

LET	ALTERATION	DATE	BY
A	28E5179-6 WAS 28E5179-5A		
	28E5179-7 WAS 28E5179-5 MACH'D SLOT & HALF IN 28E5179-7 (BOTT.)		
	MOUNTING BRKT DIM. 3½ WAS 3"		
	REMOVED ⊕ 3 RIVETS (A) DWG WT. CHG	6-9-42	
B	ADDED BRKTS A-10 & A-11		
	SHELLAC---SHELLAC (WT. CHG. REQ.)	6-9-42	
C	AN960-616A WAS AN960-B616A		
	AN515-616A-24 WAS AN515-B616A (WT. CHG. REQ.)	6-9-42	
D	28E5179-20 WAS 28E5179-10 (WT. CHG. REQ.)	6-9-42	
E	AN442-AD4 WAS AN442-AD3 (WT. CHG. REQ.)	6-9-42	
F	PER ENGR. SO-43 (V) & Q6202-1(1) ADD 515-6-7, AC 365-440(4) & 7102-AL4 (4) WERE (OMD)		E.O.A. 37458
	MFG. RECORD.	8-20-42	
G	ADDED NOTE 2 "IT IS PERMISSIBLE TO USE" REPLACE AN960-B10 WT. CHG. REQ.	11-13-42	E.O.A. 40918
H	ADDED TO NOTE "2" AN520-10-16 TO REPLACE AN520-B10-16 NO WT. CHG.	8-13-43	E.O.A. 52222

* GOVERMENT FURN. MATERIAL

ITEM	MODEL	WEIGHT
REVERSE CUR. RELAY	3GTR72A1	2.5#
STARTING CONTACTOR	3GTR72B1	2.125#

PART NO	STOCK	MATERIAL	SPEC	LH REQ.	RH REQ.	LH REQ.	RH REQ.	LH REQ.	RH REQ.	LH REQ.	RH REQ.
PARTS LIST PER ASSY.				-0		-3	-4	-5			

PART NO.	MODEL	NEXT ASSY.	QUAN.
REQUIREMENTS PER AIRPLANE			
REPLACED			7.24 Cubic Ft.
REPLACED BY			Act. Wt.
Limit on Dimensions Unless Otherwise Shown: ± .xxx	SCALE 12"/12"		
STAMP PART NUMBER WHERE SHOWN			

A.C.
NAVY NONE — HEAT TREAT
NOTED — FINISH

	DRAFT	CHECK	STRUCT	MAT	APPROV.
NOTED					

NAME BOX ASSY-ELEC.— AUX. POWER UNIT JUNCT. BOX
CONSOLIDATED AIRCRAFT CORP. SAN DIEGO CALIF.
OPP HAND — DWG. G — 28E5177

LET	ALTERATION	DATE	BY
A	REMOVED NOTE: "SPOT WELD APPROX. 1" SPACING - 6, 28E5181 / SCREEN CAC #SC-6 TOGETHER / ADDED Q4305-AD3 NO WT CHG.		
B	ADDED AC366DF1032 (4) / AN425AD3 ; DIM. 3 WAS 3.005" ; NOTE "JIG ------ RELAYS" WAS "6 (DIA.) HOLES" NO WT. CHG.		
C	ADDED #32 (.116) HOLES FOR -7 & #32 (.116) 4 HOLES 5 1/16 DIA. HOLE TO MATCH AN 3102-22-15 FOR -8. NEG. WT. CHG.		

C.A.C. #SC-6 SCREEN #10 MESH .025 DURAL 4 1/8 x 4 1/8

#32 (.116) 2 HOLES

#32 (.116) 2 HOLES Ⓒ

Q4305-AD3 Ⓐ

AC 366 DF1032 (1)
AN 425-AD3

(RIVET AC366 DF1032 ON BOTTOM OUTSIDE OF BOX) Ⓑ

28E5181

AC366 DF1032(3)
AN 425-AD3
Ⓑ

JIG LOCATE #10 (.193) 6 HOLES TO MATCH 3 GTR. 72A1 & 3 GTR 72B1 RELAYS Ⓑ

#32 (.116) 4 HOLES TO MATCH AN3102-22-15 FOR -8 Ⓒ

1 7/16 DIA. 1 HOLE FOR -8

18/32 DIA. FOR -7

5 15/32 DIA. HOLE

2 31/32 DIA. (2 HOLES)

CONTRACT #91876
#1 TO 90

- NOTE -

1. MAY BE PURCHASED FROM MONARCH TOOL & INST. CO. SAN DIEGO. CALIF.

   SPECIFYING;

   MATERIAL .064 AL. ALLOY
   COVER MT-CSD-1108
   BOX MT 1108R-416 OR EQUIVALENT

2. COVER TO BE SUPPLIED WITH NON-LOSEABLE STEEL SCREWS & DURAL WASHERS

3. REMOVE FINISH 3/16 RADIALLY AROUND HOLES

4. FINISH —
   P - INSIDE BOX - AP - OUTSIDE BOX

PBY-5	28E5177	1	
MODEL	NEXT ASSY	REQ.	

REQUIREMENTS PER AIRPLANE

REPLACES 2.3# CALC. WT

REPLACED BY CALC. WT

SCALE 12" = 1'-0

STAMP PART NUMBER WHERE SHOWN

AC366DF1032
AN425D3
Q4305-AD3
C.A.C. #SC-6 SCREEN (4 1/8 x 4 1/8)
28E5181

- 1 MADE FROM MT-CSD-1108 OR EQUIV.
- 1 MADE FROM MT-1108R-416 OR EQUIV.

PART NO	STOCK	MATERIAL	SPEC	LN REQ -0	LN REQ -2	LN REQ -3	LN REQ -4	LN REQ -5
PARTS LIST PER ASSY.								

A.C.
NAVY NONE — HEAT TREAT
NOTED — FINISH

2-12-43 — MATERIAL
DRAFT — CHECK — STRUCT — WT — APPROV.

OPP HAND NONE
DWG G SIZE

NAME BOX — ELEC. AUX. POWER UNIT JUNCT.

CONSOLIDATED AIRCRAFT CORP. SAN DIEGO CALIF.

28E5178

LET	ALTERATION	DATE	BY
A	ADDED CUTOUT IN FLANGE & LOCATING DIM. NEG. WI. CHG 6-7-43		EMB
B	DIM. 3 REF. WAS 3 ± .005" REMOVED NOTE "# 5 (.213) HOLES" ADDED AC366-DF1032 (2) AN425-AD3 & NOTE "J/G" --- RELAY NEG. WI. CHG. 6-343		EMB
C	CREATED - 20 RSGS NEG WI. CHG 6-3-43		EMB

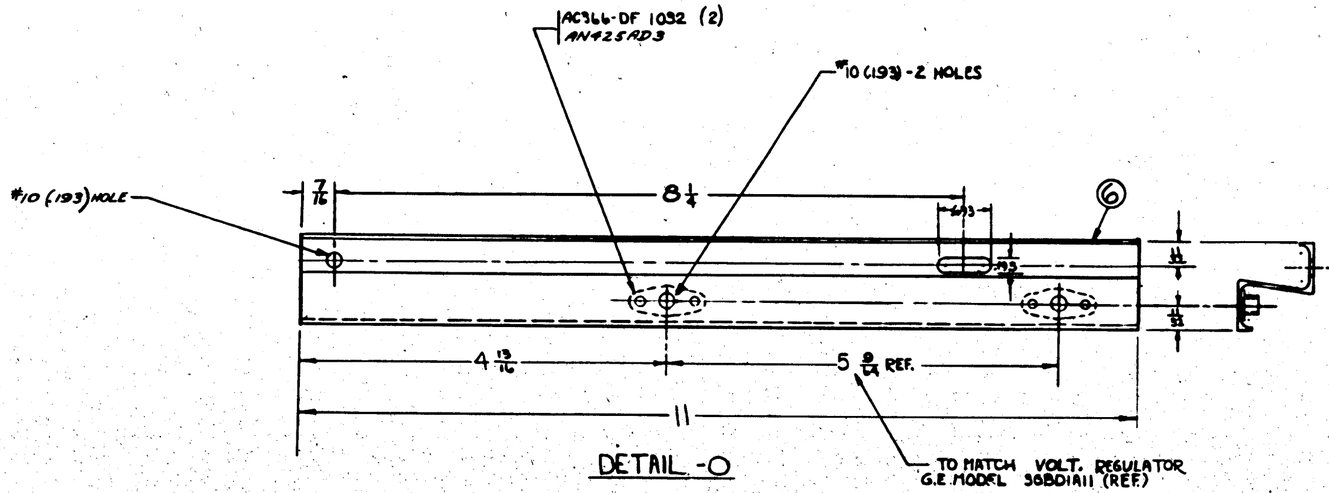

DETAIL -O

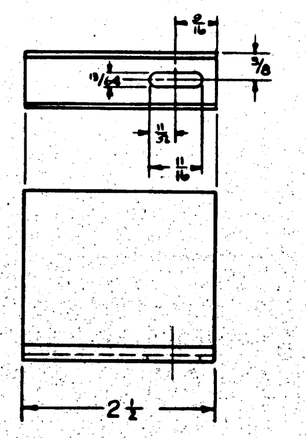

DETAIL -8

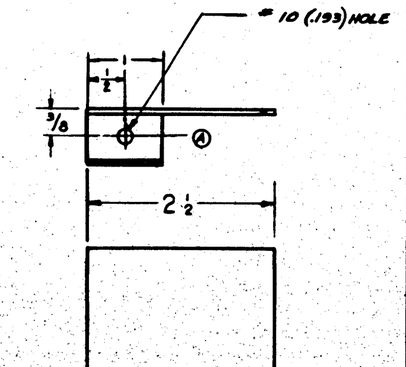

DETAIL -9

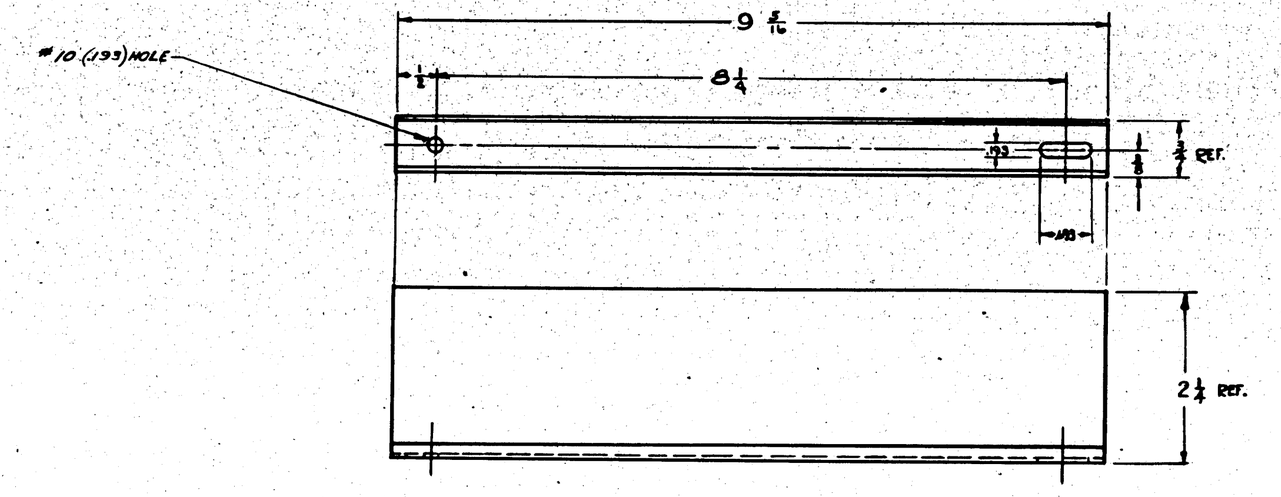

DETAIL -7

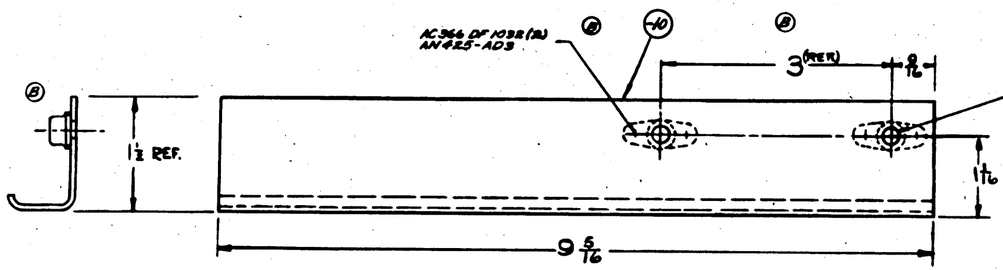

DETAIL -20

PART NO	STOCK	MATERIAL	SPEC	LH REQ	RH REQ	LH REQ	RH REQ	LH REQ	RH REQ
PARTS LIST PER ASSY.				-0	-20	-3	-4	-5	

AN425-AD3
AC366-DF1032 2 2 2

-10	221-8	AN425-AD3
-8		AN425-AD3
-7		AN425-AD3
-9		AN425-AD3
-20	221-8	AN425-AD3
-0	221-8	AN425-AD3

-10	AC366-DF1032 (2) AN425-AD3
-8	AC366-DF1032 (2) AN425-AD3
-7	AC366-DF1032 (2) AN425-AD3
-9	AC366-DF1032 (2) AN425-AD3
-20	AC366-DF1032 (2) AN425-AD3
-0	AC366-DF1032 (2) AN425-AD3
-4	K90427 x 1 1/16 Lg. AL. 24ST

DASH NO.	MODEL	PART ASSY NO.
REQUIREMENTS PER AIRPLANE		
REPLACES		NOTED SEAL NO.
REPLACED BY		ASS'Y QTY.

LAST DR. DRAWING VALUES: SCALE 12" = 1'0"
STAMP PART NUMBER WHERE SHOWN

CONTRACT NO 91876

-0 = .1495 #
-7 = .176 #
-8 = .04726 #
-9 = .04726 #
-20 = .1295 #

(B) RELOCATE #10 (193) 2 HOLES TO MATCH 3676 TRAI RELAY

AC									
NAVY NONE	Z-P-AP	DRAWN							
HEAT TREAT	FINISH	DRAFT	CHKD	STRUCT	MAT	APPD	ENG		

NAME SUPPORTS — ELEC. A.P.U. JUNCTION BOX

CONSOLIDATED AIRCRAFT CORP. San Diego, Calif.

OPP. HAND — R

SIZE G | DWG 28E5179

A

LET	ALTERATION	DATE	BY		
A	3/32 HOLE WAS 3/32 - NEG. WT CHG.	6-11-42	HINES	A33609	
B	ON DWG. Q4305AD3 (8 PLACES) WAS SPOTWELD - - - APPROX. ℄ DIM. 1 7/8 WAS 1" - NEG. WT. CHG.	6-11-42	HINES	E.O. A27...	
C	ON DWG. ADDED NOTE "SHELLAC - - - SHELLAC" & IN 6/M ADDED 28E5213-6 (1) - NEG. WT. CHG.	6-11-42	HINES	E.O. A3474	
D	IN 9/M ASSIGNED -9 TO C.A.C. - SC-6 (1) NO WT. CHG.	6-11-42	HINES	E.O. A35042	
E	NOTE "SHELLAC - - - SHELLAC" CHG'D TO "APPLY 28E5213-6 - - - SHELLAC." NO WT. CHG.	1-29-43		E.O. A38213	

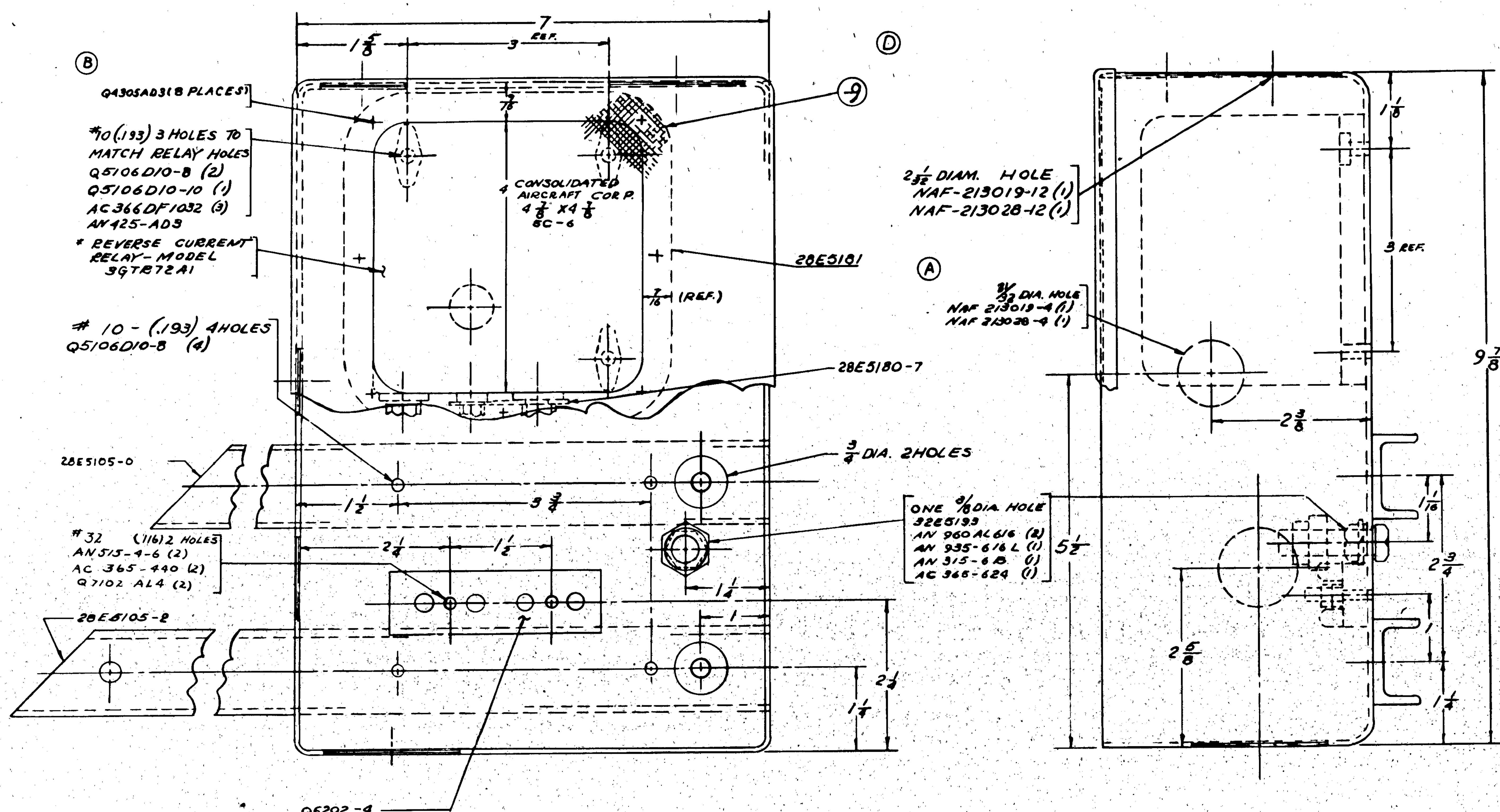

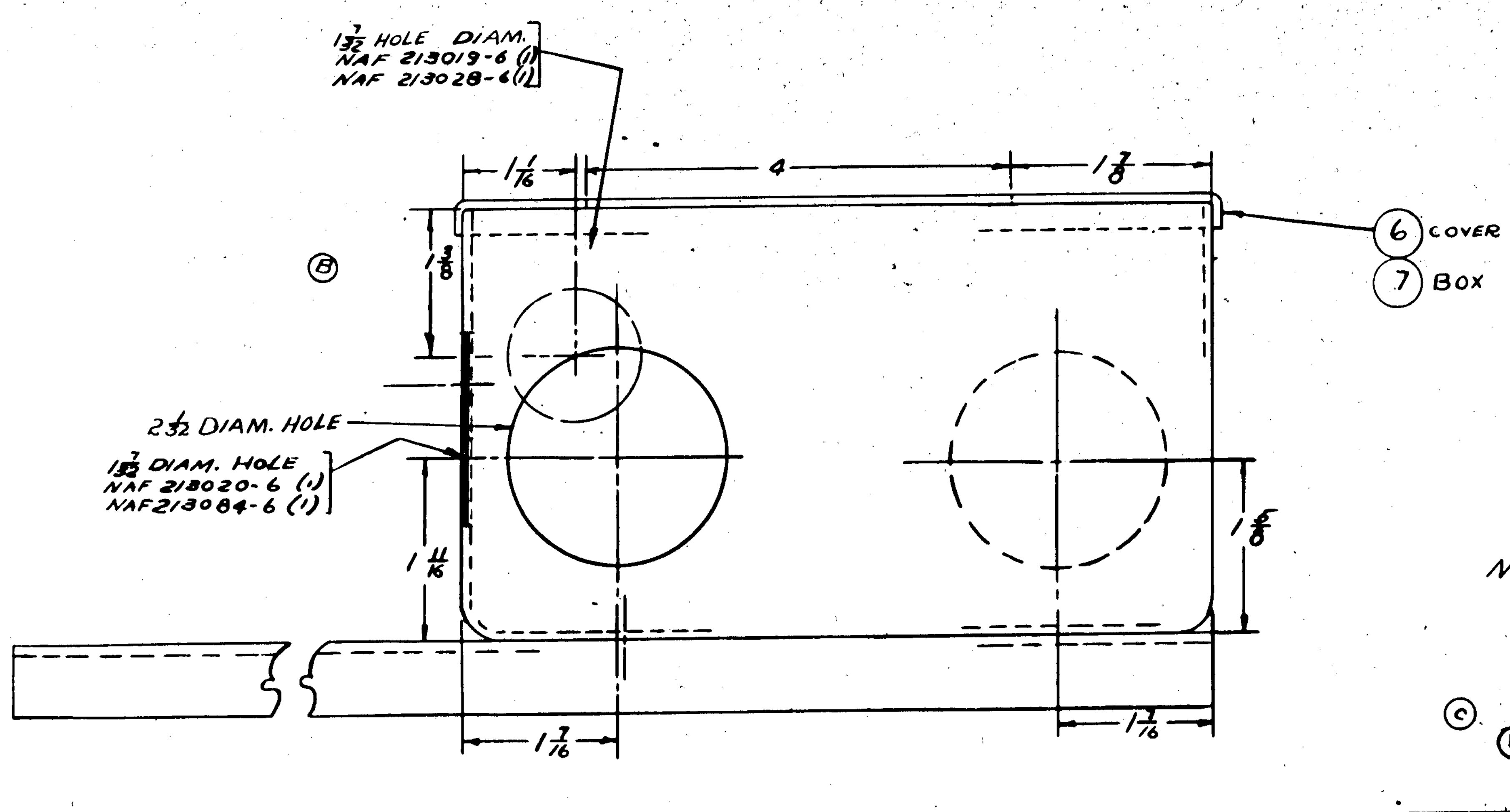

NOTE:
BOX & COVER MAY BE PURCHASED FROM POULSEN & NARON #1305-3SD 1305-400N OR MONARCH TOOL CO. #CSD1106 1100R400

FINISH P INSIDE P-AP OUTSIDE
REMOVE FINISH 3/32 RADIALLY AROUND CONDUIT HOLES.

Ⓒ Ⓐ APPLY 28E5213-6 TO INSIDE OF COVER 28E5183-6 IF BLUE PRINT CUT-OUT IS USED APPLY WITH & COVER WITH SHELLAC Ⓔ

*GOVT. FURN. EQUIP.

PART No	STOCK	MATERIAL	SPEC	-0 REQ	-2 REQ	-3 REQ	-4 REQ	-5 REQ
* 3GTR72A1	REVERSE CURRENT RELAY			1				
Q4305AD3				1				
NAF213084-6				1				
NAF213028-12				1				
NAF213028-6				1				
NAF213028-4				1				
NAF213020-6				1				
NAF213019-12				1				
NAF213019-6				1				
NAF213019-4				1				
28E5181				1				
28E5213-6				1				
AN425-AD3				1				
AN515-4-6				2				
AC366DF1032				3				
AC365-440				2				
Q5106D10-8				6				
Q7102-AL4				2				
Q6202-4				1				
Q5106D10-10				1				
28E5180-7				1				
32E5193				1				
28E5183-9	4 7/8 X 4 7/8	CAC. SC-6		1				
28E5105-2				1				
28E5105-0				1				
28E5183-7	BOX & COVER SEE NOTE			1				
28E5183-6			(CAC. BOX 53-400N)	1				

PARTS LIST PER ASSY.

CONTR. 91876 SHIPS # 1-...

ASSY DASH No	MODEL	NEXT ASSY	REQ
-0	PBY-5	28E5182	1

REQUIREMENTS PER AIRPLANE

REPLACES — CALC WT
REPLACED BY — ACT WT
LIMIT ON DIMENSIONS UNLESS OTHERWISE SPECIFIED ± 1/32 — SCALE 12" - 1'-0"
STAMP PART NUMBER WHERE SHOWN

A C		DRAFT	CHECK	STRUCT	MAT	APPROV	ENG
NAVY NONE	SEE NOTE	LANG 2/16/42	CARLSON 2-21-42 FALCONER	GERBER	McGHEE 2-24-42	PACHI 3/12/42 W.C.	McCABE WOLD
HEAT TREAT	FINISH						

OPP HAND NONE

NAME BOX ASS'Y-ELEC. VOLTAGE CONTROL UNITS-BLKD 4
CONSOLIDATED AIRCRAFT CORP. SAN DIEGO, CALIF.
DWG SIZE G 28E5183

R 2/25/42

LET	ALTERATION	DATE	BY	LET	ALTERATION	DATE	BY
E	REDRAWN & REVISED	5/1/42	DOBBS				
F	ADDED TO FACE: AN3064-5 & AN3066-5, AN3064-4 & AN3066-4, AN3064-8 & AN3066-8. ADDED TO FACE & B/M: AN931-3 (2), NAF1150-3-44 (1)	8/13/42	DOBBS				
G	ADDED TO "REQ. PER AIR": X PBY-1, PBY-1, PBY-2, PBY-3, PBY-4, PBY-5, PBY-5A.	9/24/42	KING				
H	REMOVED FROM B/M: AC D1032 (4) NO WT CHG.	11-24-42					
J	Q908A-5(3) WAS Q908D-3-60, Q908A-10(1) WAS 28E5058-8(1), Q908A-12(13) WAS Q908D-12-8(13) WT. CHG. NEG.	8-4-43					

E.O.A 89030

E.O.#28239

NOTES:
1- B-2115 & B-2389 LIGHTS MAY BE PURCHASED FROM GRIMES MFG. CO., URBANA, OHIO
2- BOND IN ACCORDANCE WITH 28E4027.
3- CONDUIT LENGTHS ARE APPROX. ONLY. DETERMINE ACCURATELY ON FIRST SHIP & NOTIFY ENG. DEPT.
4- ALL KNURLED NUTS SUPPLIED WITH LAMPS TO BE USED ON FLEX. CONDUIT ASS'Y

FINISH:
SOLID CONDUIT, P-6P OUTSIDE ONLY
FLEX CONDUIT, NO FINISH

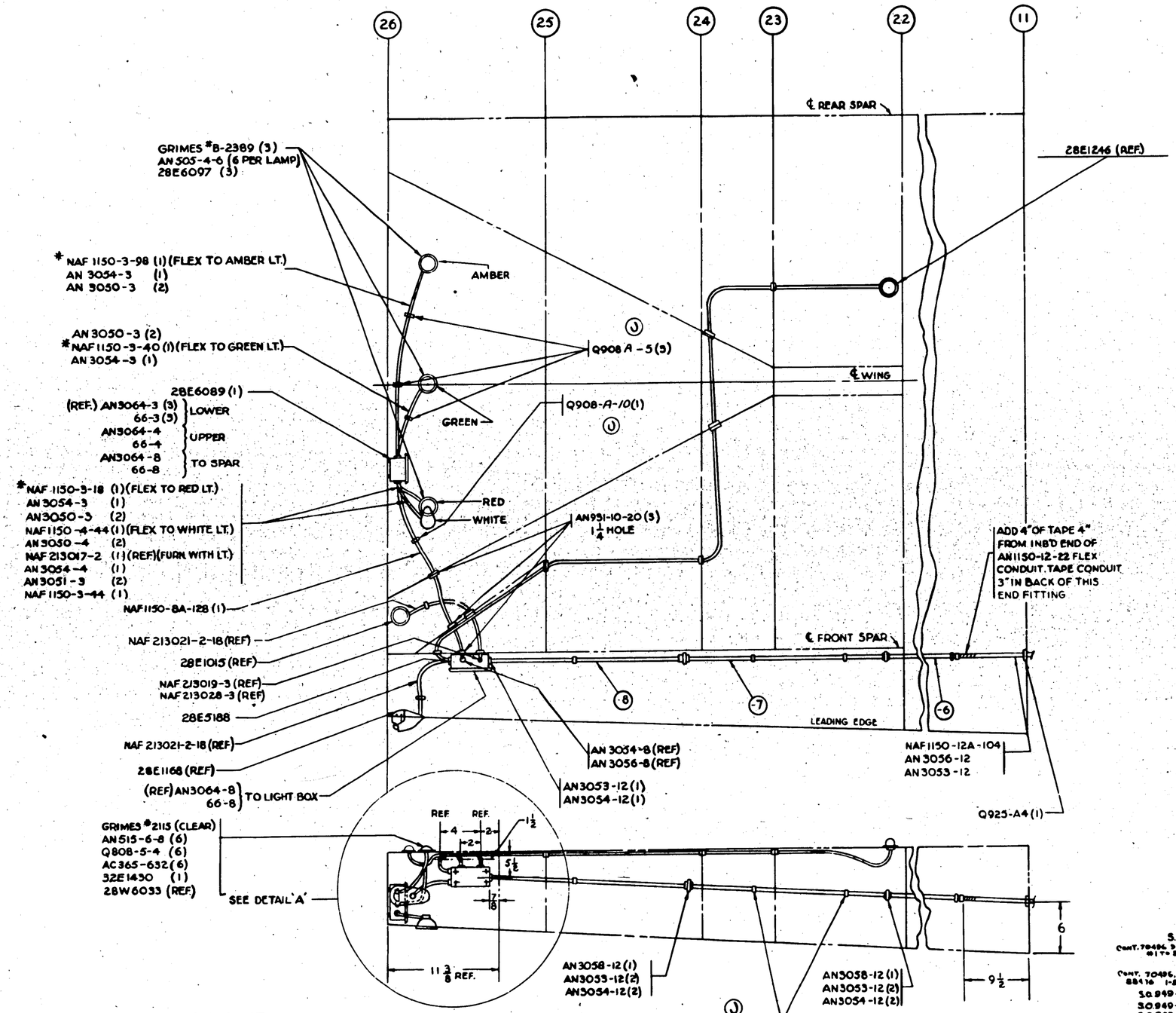

DETAIL 'A'
NO SCALE

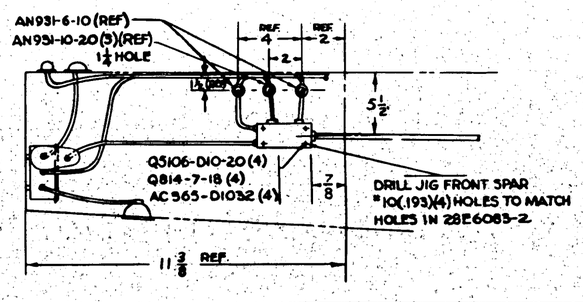

*NOTE: ON ONE END OF EACH FLEX USE KNURL NUT FURNISHED WITH GRIMES TYPE B-2389 LIGHT

FINISH CODE

Z	ANODIC TREATMENT
P	P-77 PRIMER
AP	ALUMINIZED PRIMER
C	CADMIUM PLATE
GP	GREEN PRIMER

	28-SAMN	28E5194	/	
	XPBY-1	28F001	/	
	PBY-1	28E1001	/	
	PBY-2	28E1001	/	
	PBY-3	28E4010	/	
	PBY-4	28E4010	/	
-2	PBY-5B	28E6041	/	
-2	PBY-5	28E5060	/	
-2	PBY-5A	28E5656	/	
ASSY GASH NO.	MODEL	NEXT ASSY	SER	

REQUIREMENTS PER AIRPLANE

REPLACES 28E5190 OF A/C No. — Calc Qty

REPLACED BY — Act Qty

Limit on 3 Dec Pl Unless Otherwise Specified — DATE 1/38 — SCALE 1 1/2" = 1'-0"

STAMP PART NUMBER WHERE SHOWN

S.O. 952-18
Cont. 70486, 91578 91 TO 80

Cont. 70486, 77795 88416 1-82

S.O. 949-67
S.O. 949-64
S.O. 953-24
SERVICE ACTION

PART No	STOCK	MATERIAL	SPEC	LH RH REQ	LH RH REQ	LH RH REQ	RH REQ	LH RH REQ
				-0	-2	-3	-4	-5
	NAF1150-12A-104			1	1			
	NAF1150-8A-128			1	1			
	NAF1150-4-44			1	1			
	NAF1150-3-98			1	1			
	NAF1150-3-44			1	1			
	NAF1150-3-40			1	1			
	NAF1190-8-18			1	1			
	Q5106-D10-20			4	4			
	Q925-A4			1	1			
	Q908-A-12			13	13			
	Q908-A-10			1	1			
	Q908-A-5			3	3			
	Q814-7-18			4	4			
	Q808-5-4			6	6			
	AC565-632			6	6			
	AC365-D1032			4	4			
	AN3058-12			2	2			
	AN3056-12			1	1			
	AN3054-12			5	5			
	AN3054-4			1	1			
	AN3051-3			3	3			
	AN3053-12			6	6			
	AN3051-3			2	2			
	AN3050-4			2	2			
	AN3050-3			6	6			
	AN931-10-20			9	9			
	AN 515-6-8			6	6			
	AN505-4-6			18	18			
	B-2389 (RED) CAC LI-19-80			1	1			
	B-2389 (AMBER) CAC LI-19-82			1	1			
	B-2389 (GREEN) CAC LI-19-81			1	1			
	2115 (CLEAR) CAC LI-16-5			3	3			
	28E6097	-						
	28E6089			1	1			
	28E5188			1	1			
	32E1430			1	1			
	28E1015			1	1			
	-8	140 D.X .032 X 33	AL. TUBE	44T19 23 A/H	1			
	-7	140 D.X .032 X 216	AL. TUBE	44T19 23 A/H	1			
	-6	1/4 O.D. X .032 X 69	AL. TUBE	44T19 23 A/H	1			

PARTS LIST PER ABBY.

A C	NOTED	8/1/42	DOBBS			ZUCA
NAVY —		DRAFT	CHECK	STRUCT	WT	APPROV	ENG
HEAT TREAT	FINISH						

NAME INSTALLATION-ELEC.-RIGHT HAND OUTER PANEL CONDUIT-WING

OPP HAND NONE

DWG G SIZE 28E5190

CONSOLIDATED AIRCRAFT CORP. San Diego Calif

R 28E5190

INBOARD

LET	ALTERATION	DATE	BY	LET	ALTERATION	DATE	BY
A	RE-DRAWN (REVISED: REPLACED 28E5194 DATED 2-27-42						
B	RELEASE AFTER RE-REL.	3-4-42	WITTER				
C	CHNG P/N 78A W49/129	6-16-43	SMITH				

E G#A32482

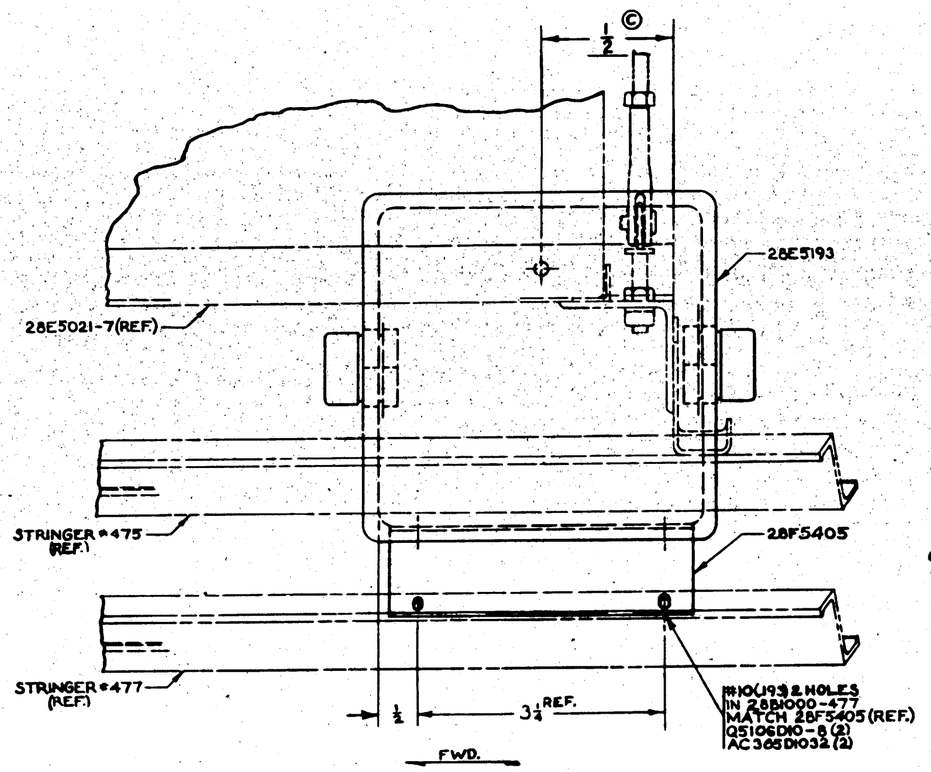

VIEW LOOKING OUTBOARD

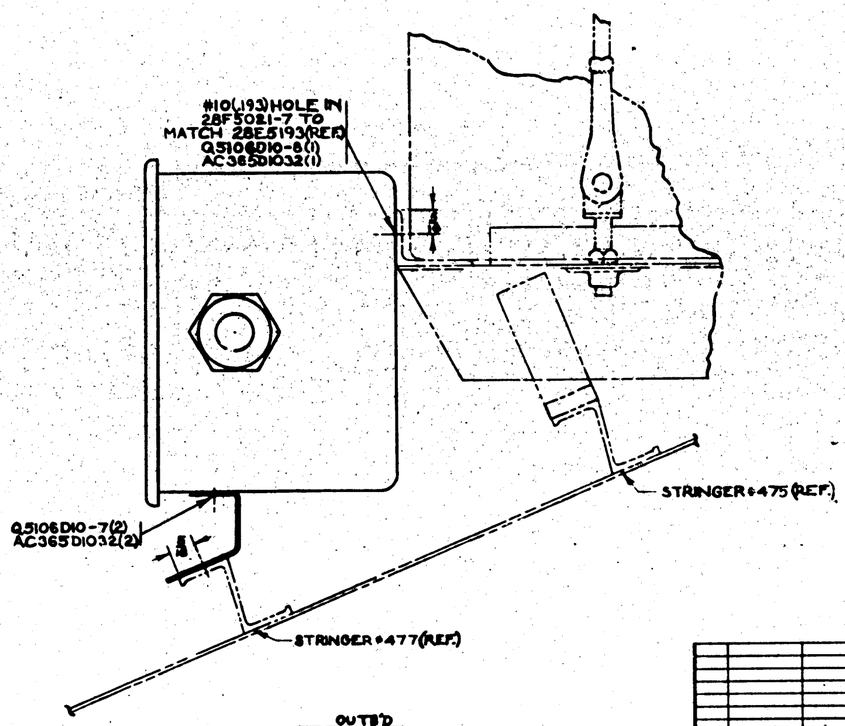

VIEW LOOKING FORWARD

CONTRACT 70496
" 77713
" 66496
" 91896

RUSH RELEASED 3-12-42
"B" CHG. RUSH RELEASED 3-18-42

NOTE:
1. CONTRACTOR INSTALLED ON ALL AIRPLANES OF CONTRACT #66496 & 91896.
2. ON CONTRACTS #70496 (53 AIRPLANES) & 77713 PARTS ARE TO BE INSTALLED TO NAVY FOR SERVICE INST.

QTY PER SHIP	MODEL	NEXT ASSY	SER. NO.
1	PBY5A	ASSEMBLY	ACCESSORIES
1	PBY6	ASSEMBLY	ACCESSORIES

REQUIREMENTS PER AIRPLANE

REPLACES 28E5194-2-3748 SERIAL NO.

REPLACED BY ASSY NO.

LIST OR BLUEPRINT DATED 1-15-42 — SCALE 12"=1'0" — STAMP PART NUMBER WHERE SHOWN

PART NO.	STOCK	MATERIAL	SPEC	LH REQ -0	RH REQ -0	LH REQ -2	RH REQ -2	LH REQ -3	RH REQ -3	LH REQ -4	RH REQ -4	LH REQ -5	RH REQ -5
Q5106D10-7												2	
Q5106D10-8												3	
AC365D1032												5	
28E5193 ASSEMBLY												1	1

PARTS LIST PER ASSY

A C
NAVY —
HEAT TREAT — FINISH

NAME INSTL'N-ELEC-RADAR REC'R. TO CONTROL PANEL SPLICE BOX

CONSOLIDATED AIRCRAFT CORP. SAN DIEGO CALIF

DRAFT — CHECK — TRACER — DAY — SCALE 1:10

OP / HAND NONE

DWG. NO. G 28E5194

SIZE

R

LET	ALTERATION	DATE	BY
A	889 W/WAS 668/669; 668 REPLACES 671 PREVIOUS 671 ADD 1 DWG 668	8-26-42	
B	WIRE #882 WAS #668 - 28E6058 (WAS 28E6058BOX) 28E6058(K) WAS 28E6058BOX) ADDED "AL-L1" & "F.L" DESIGNATIONS. REMOVED CONTRACT LIMITATIONS & ADDED PBY-5 TO REQ PER AIR BLOCK - NO WT CHG	9-29-42	

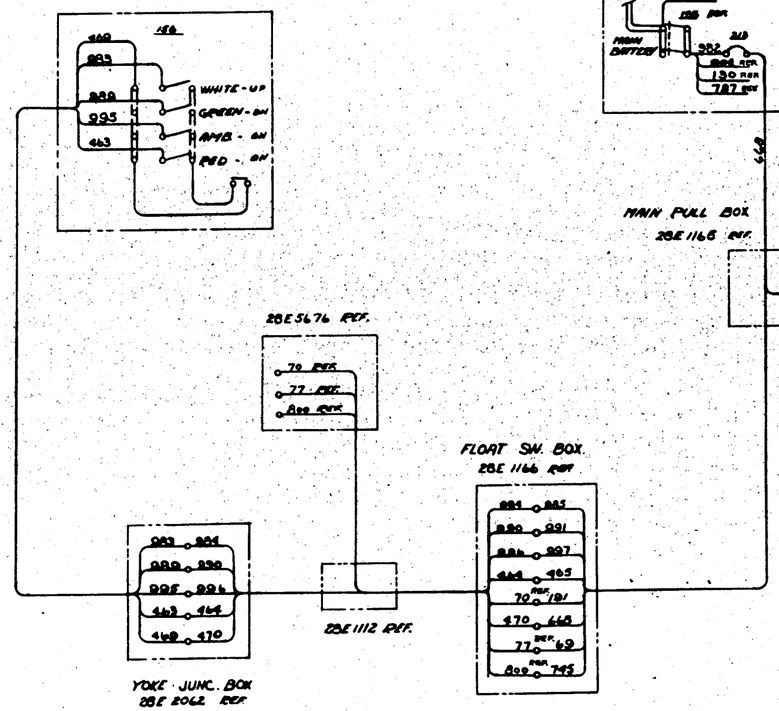

WIRE TABLE

WIRE	GAUGE	LENGTH
883	20	8
84		25
85		10
86		22
87		48
88		5
89		8
900		25
91		10
92		22
93		48
94		5
95		8
96		A
97		10
98		22
99		48
400		5
01		8
02		25
03		10
04		22
05		48
06		5
07		8
08		25
09		10
10		22
11		48
12		5
13		8
14		25
15		10
16		22
17		48
18		5
19		8
20		25
21		10
22		48
23		5
24		8
25		25
26		10
27		22
28		48
29		5
30		8
31		25
32		10
33		22
34		48
35		5
36		8
37		25
38		10
39		22
40		48
41		5
42		8
43		25
44		10
45		22
46		48
47		5
48		8
49		25
50		10
51		22
52		48
53		5
54		8
55		25
56		10
57		22
58		48
59		5
60	20	8
470	16	9
668	16	12
982	16	3
		1

NOTE
SHOP TO DETERMINE ACTUAL LENGTHS OF WIRES ON FIRST SHIP & NOTIFY ENG.

EQUIPMENT TABLE

No.	ITEM	MFG.		Type	Drwg.	Req'd
213	CIRCUIT BREAKER	CUTLER-HAMMER INC.	MILWAUKEE, WIS.	8731K4		1
78	FUSE - 5 AMP.	LITTLE FUSE COPR	CHICAGO, ILL	4 AG	NAF 1034-4-5	1
156	RECOG. LITE SW. BX.	GRIMES MFG. CO.	URBANA, OHIO	E	B2115 - WHITE	1
198	RECOG. LITE	" " "	" "	E	B2115 - RED	1
199	" "	" " "	" "	E	B2115 - AMBER	1
200	" "	" " "	" "	E	B2115 - GREEN	1
201	" "	" " "	" "	RP11	WITH LIGHT	4
202	" "	" " "	" "			

ALL

PBY-5	28E5050	1
PBY-5A	28E5050A	1

MODEL	NEXT ASSY.	NO.

REQUIREMENTS PER AIRPLANE

REPLACED	—	SYM. QTY.
REPLACED BY	—	ASY. QTY.

UNLESS OTHERWISE SPECIFIED DIMENSIONS ARE IN INCHES — SCALE —

STAMP PART NUMBER WHERE SHOWN

PART NO.	STOCK	MATERIAL	SPEC.	LH RH REQ.	LH RH REQ.	LH RH REQ.	LH RH REQ.	LH RH REQ.
28	ADDED	WIRE AR	ADDED AR-15-42					
PARTS LIST PER ASSY.				-0	-2	-3	-4	-5

A-C		9-3-42					
NAVY —	—	APPROVED	B.M.S.		9-10-42		HOLD
HEAT TREAT	FINISH		DRAFT	CHECK	STRUCT	DAY	APPROV. DWG

APP. HAND — ADDED

NAME WIRING DIAGRAM - ELEC:- RECOGNITION LIGHTS

CONSOLIDATED AIRCRAFT CORP. San Diego, Calif.

DWG. G SIZE 28E5195

R

E.O. A59772

LET	ALTERATION	DATE	BY	LET	ALTERATION	DATE	BY
A	RELOCATE 28E3187, REMOVE CONT.						
	91876 & PAY-5 REQS. FROM REQ						
	BLOCK. 28E3197-2 WAS -0() INT.						
	CH'G. REQ.	10/24/42	[illegible]				

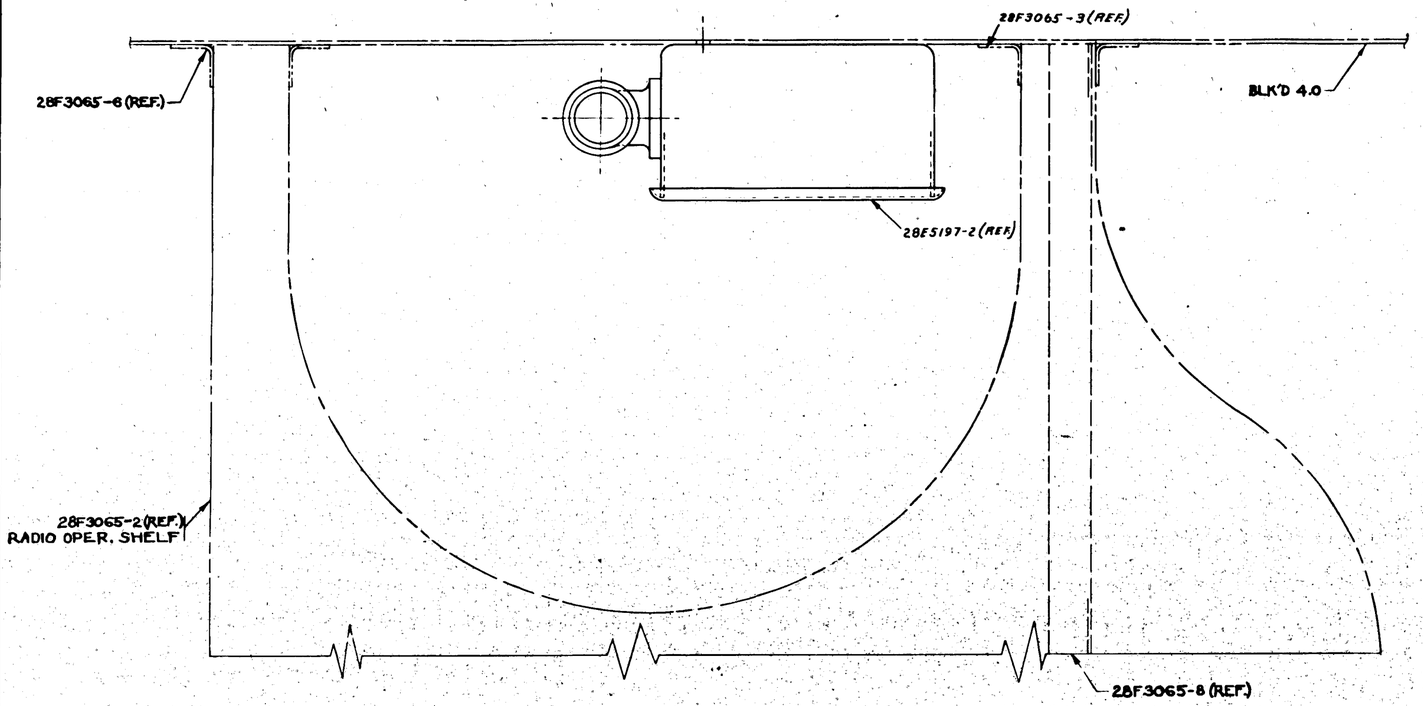

PLAN VIEW

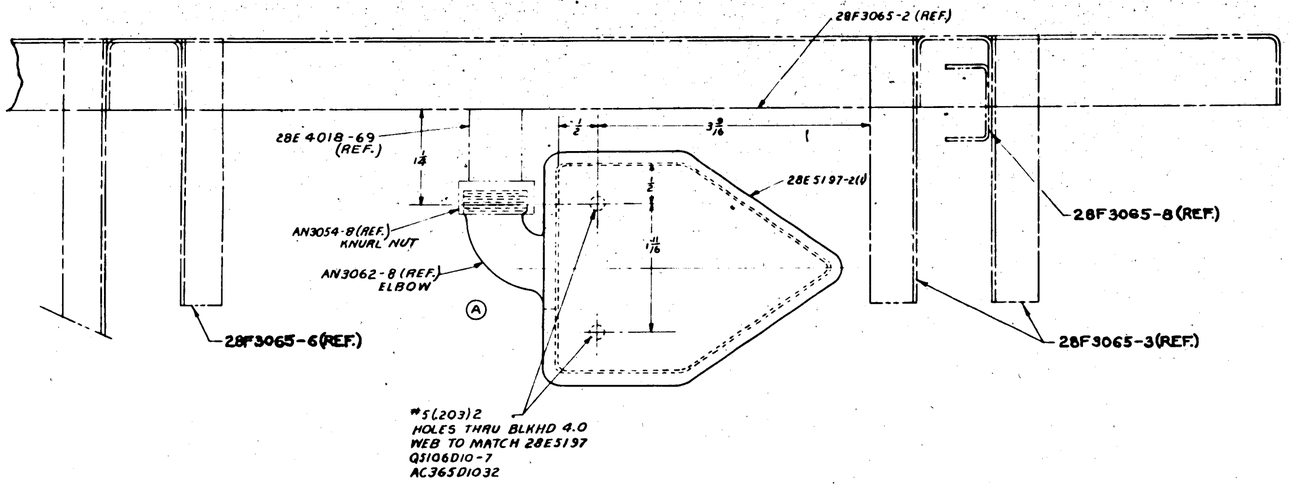

VIEW LOOKING AFT AT BLK'D 4.0

OUTB'D

C. #88476
C. #70496
C. #77713

-0	PBY-5A	28E 4018	1
ASSY SERIES NO.	MODEL	NEXT ASSY	REQ.

REQUIREMENTS PER AIRPLANE

REPLACES 1.0 CALC. WT.

REPLACED BY ACT. WT.

LAYOUT OR ENGINEERING SPECIFICATIONS: 1/32

SCALE: 12"=1'0"

STAMP PART NUMBER WHERE SHOWN

Q5106D10-7
AC365D1032
28E5197-2

PART NO	STOCK	MATERIAL	SPEC.	LH REQ.	RH REQ.	LH REQ.	RH REQ.	LH REQ.	RH REQ.	LH REQ.	RH REQ.
PARTS LIST PER ASSY.				-0	-1	-2	-3	-4	-5		

A C
NAVY
HEAT TREAT
FINISH

	DRAFT	CHECK	STRUCT	MAT	APPROV	ENG
SPEC APPROV						
GEORGE	3-6-42	JRM	PACH!	JCH	3/18/42	WELD

OPP HAND

NAME INSTALL-ELEC.-R3003 POWER JUNCTION BOX

CONSOLIDATED AIRCRAFT CORP. SAN DIEGO, CALIF.

DWG G SIZE 28E5196

3/18

R

LET	ALTERATION	DATE	BY	LET	ALTERATION	DATE	BY

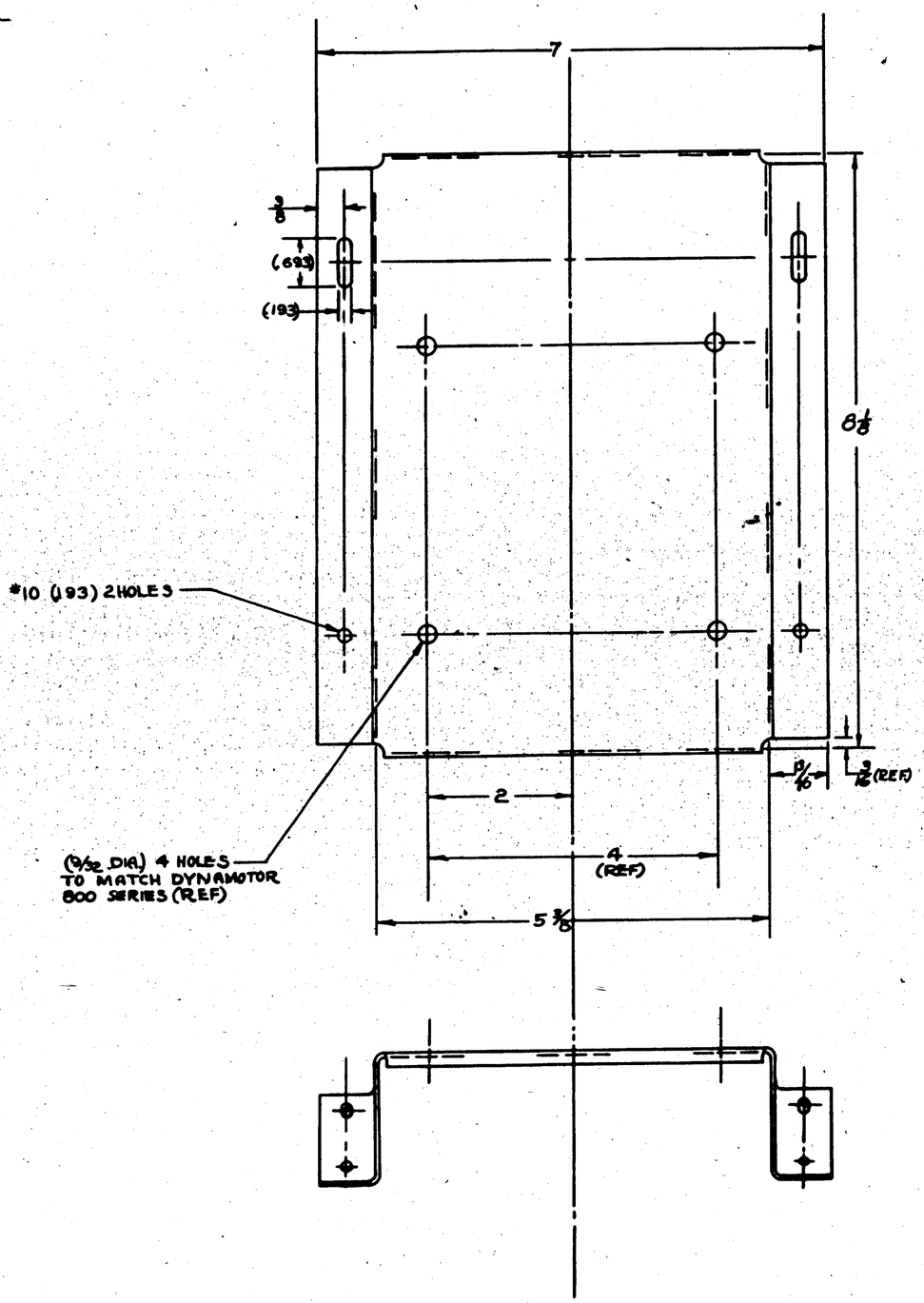

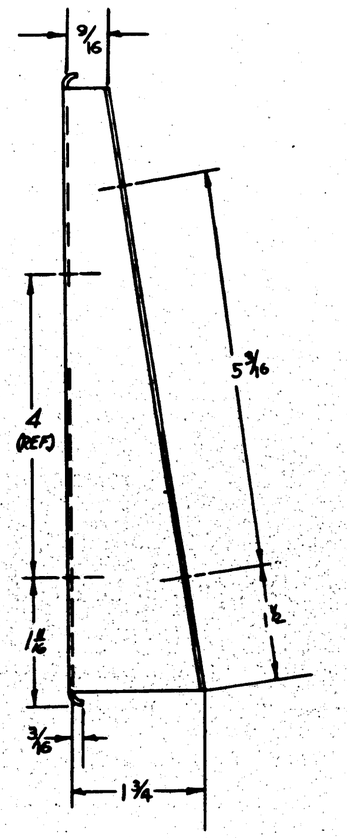

CONT. #70496 (BU #2406-2455 INCL. ONLY)
& CONT. #91876

Rush release 4-2-42

ASST BASED ON	MODEL	NEXT ASSY	NO.								
REQUIREMENTS PER AIRPLANE											
REPLACED			.48 ASST QTY								
REPLACED BY			1 ASST QTY								
LIMIT ON DRAWING PROVED	SCALE										
1/32	12"=1'-0"										
STAMP PART NUMBER WHERE SHOWN											

PART NO	STOCK	MATERIAL	SPEC.	LH REQ. -0	RH REQ. -0	LH REQ. -2	RH REQ. -2	LH REQ. -3	RH REQ. -3	LH REQ. -4	RH REQ. -4	LH REQ. -5	RH REQ. -5

PARTS LIST PER ASSY.

A C											
NAVY NONE	Z-P-AP										
HEAT TREAT	FINISH			DRAFT	DESIGN	STRUCT	MAT	APPROV	ENG		

NAME BRACKET-ELECT DYNAMOTOR-800-1-A

CONSOLIDATED AIRCRAFT CORP. San Diego, Calif.

GRP NAME NONE

DWG G

DWG 28E5201

LET	ALTERATION	DATE	BY	LET	ALTERATION	DATE	BY

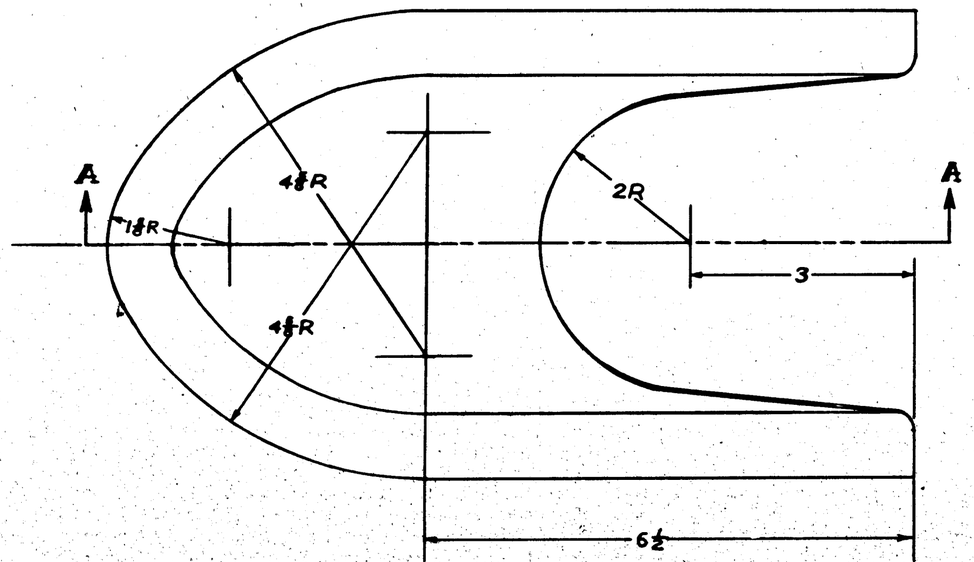

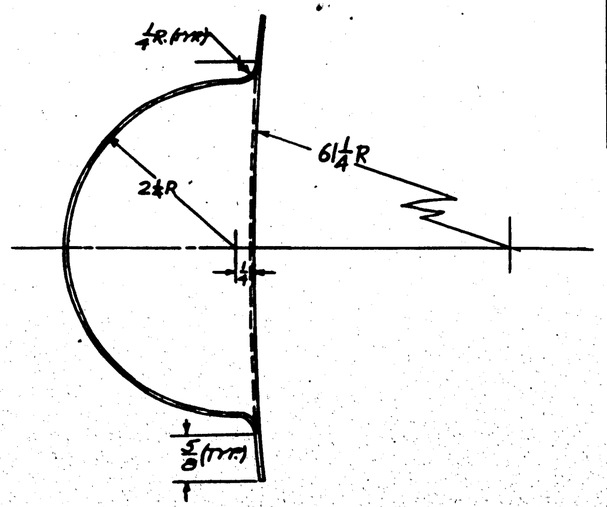

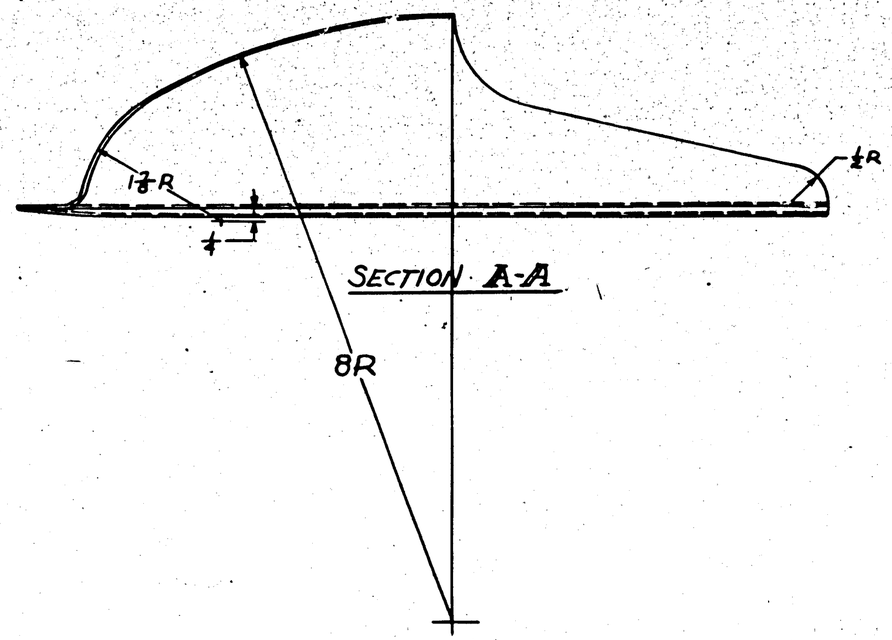

SECTION A-A

(C-70496 "2406-2455)

PBY-5	CATALINA												
ASSY. BASIC No.	MODEL	NEXT ASSY	USED										
REQUIREMENTS PER AIRPLANE													
REPLACED		AR											
REPLACED BY		ACT. QTY.											
LIST in Subdivision Sheets preceding this one	SCALE 12" = 1'-0"												
STAMP PART NUMBER WHERE SHOWN													

PART No	STOCK	MATERIAL	SPEC	L.H. REQ.	DIR.	L.H. REQ.	DIR.	L.H. REQ.	DIR.	L.H. REQ.	DIR.	L.H. REQ.	DIR.
				-0		-2		-3		-4		-5	

PARTS LIST PER ASSY.

A C NAVY			STOCK						
HEAT TREAT	Z-P-4P		6-17-42	6-17-42					
	FINISH		DRAFT	CHECK	STRUCT	WAT		APPROV	ENG

NAME HOOD-OUTLET DUCT AUX POWER PLANT

CONSOLIDATED AIRCRAFT CORP. San Diego, Calif.

CODE IDENT. NO. G

DRAWING NO. 28E5230

LET	ALTERATION	DATE	BY	LET	ALTERATION	DATE	BY

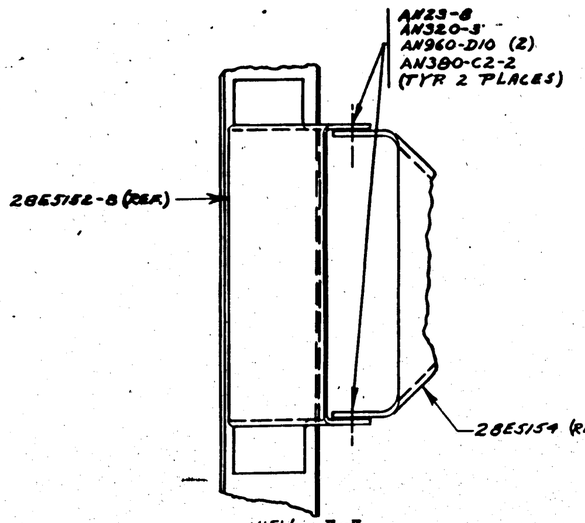

VIEW A-A

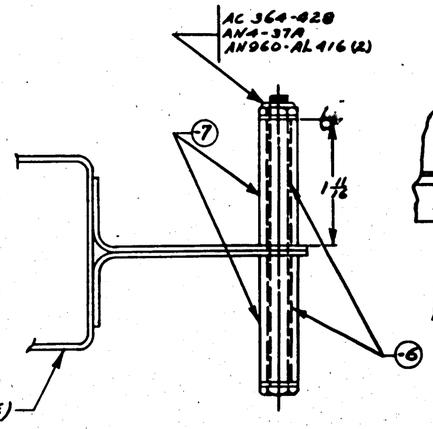

VIEW B-B

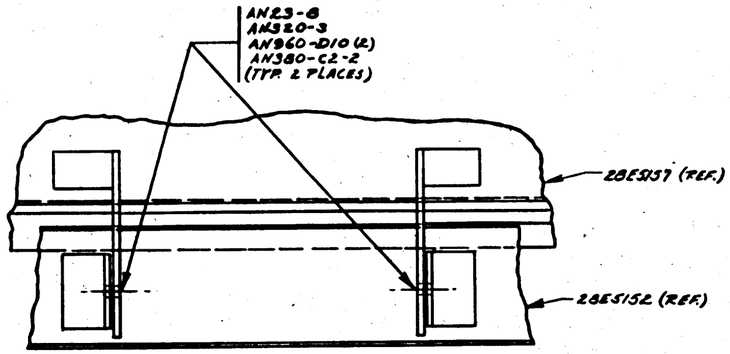

VIEW C-C
ROTATED 90°
(SHOWING DOOR IN ALTERNATE POSITION)

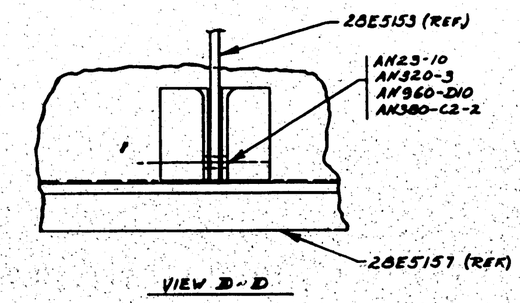

VIEW D-D

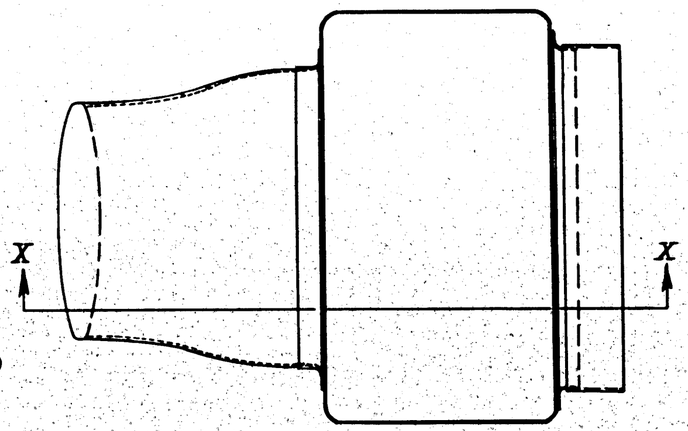

PLAN VIEW
SCALE 6"-1'-0"

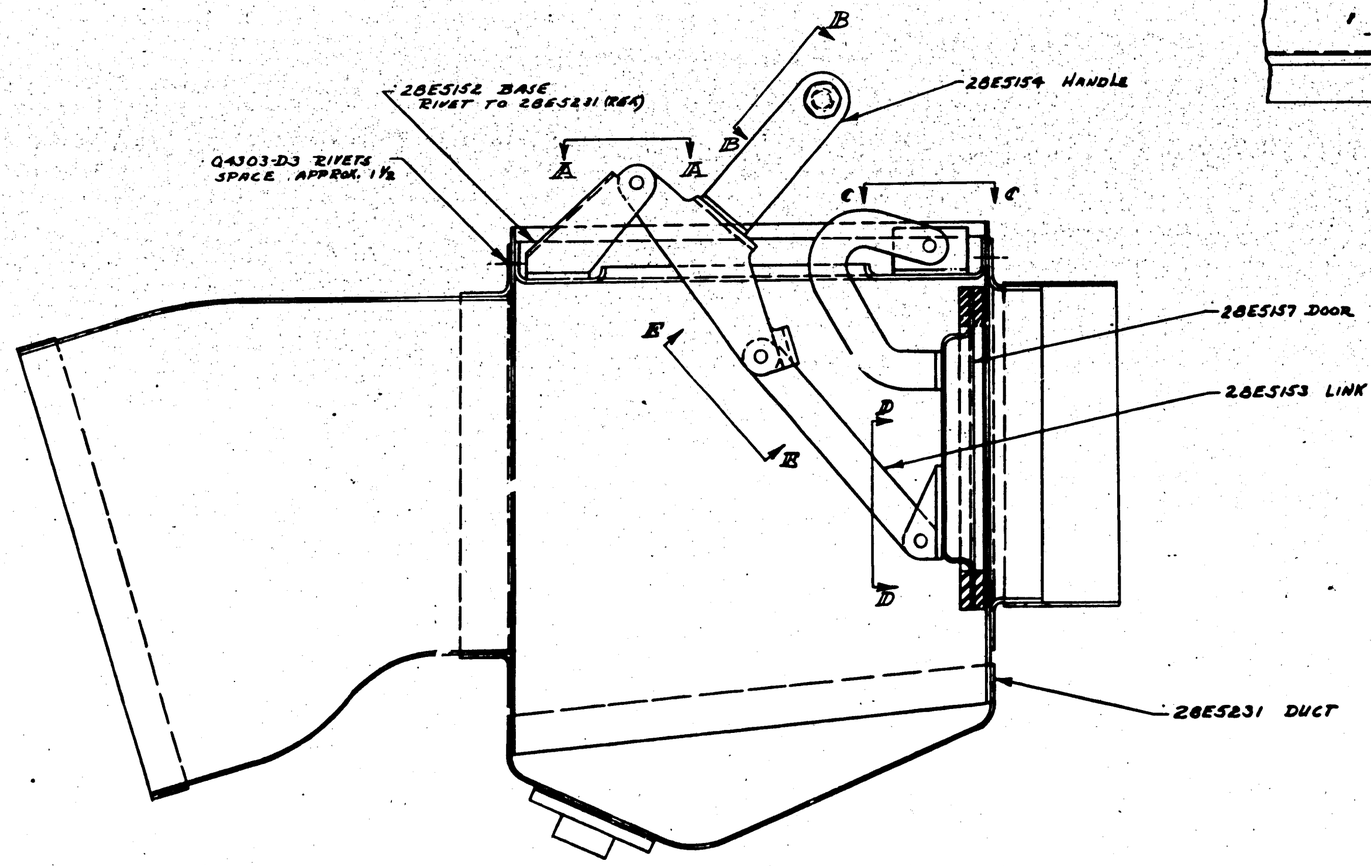

SECTION X-X

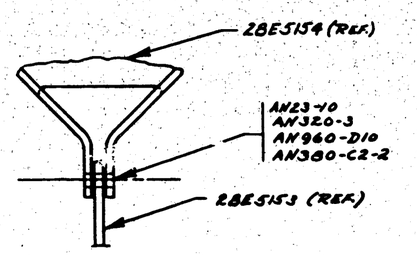

VIEW E-E

C-70496 (#2406-2455)

PART NO	STOCK	MATERIAL	SPEC.	-1 REQ.	-2 REQ.	-3 REQ.	-4 REQ.	-5 REQ.
Q4303-D3				16	16	16	16	16
AN960-D10				2	2	2	2	2
AN960-416L				4	4	4	4	4
AN380-C2-2				4	4	4	4	4
AN320-3				4	4	4	4	4
AN23-10				2	2	2	2	2
AN23-8				4	4	4	4	4
AN4-37A				1	1	1	1	1
AC 364-428				1	1	1	1	1
28E5231				1	1	1	1	1
28E5157				1	1	1	1	1
28E5153				1	1	1	1	1
28E5154				2	2	2	2	2
28E5152				1	1	1	1	1
-9 RU-27 3/4 x 1/4				3				
-4 RU-27 3/4 x 1/4				2				

PARTS LIST PER ASSY.

PBY-5	28E5232	/
MODEL	PROJ ASSY. NO.	

REQUIREMENTS PER AIRPLANE

REPLACES	SHIP WT.
REPLACED BY	ASS. WT.
SCALE AS NOTED	
12-15-42	

STAMP PART NUMBER WHERE SHOWN

AC	
NAVY NONE	NONE
HEAT TREAT	FINISH

DRAFT: J. [illegible] 12-15-42

DESIGN	STRUCT	MAT	APPROV.	ENG.

NAME DOOR ASSEM. - AUX. P.P. COOLING AIR INLET DUCT

CONSOLIDATED AIRCRAFT CORP. San Diego, Calif.

OPP. HAND

SIZE G | DWG. NO. 28E5232

LET	ALTERATION	DATE	BY
A	REVERSED WIRES 1001 & 1002 ADDED NOTE NO. 2 TO FACE. NO WT CHG.	8-2-[illegible]	[illegible]

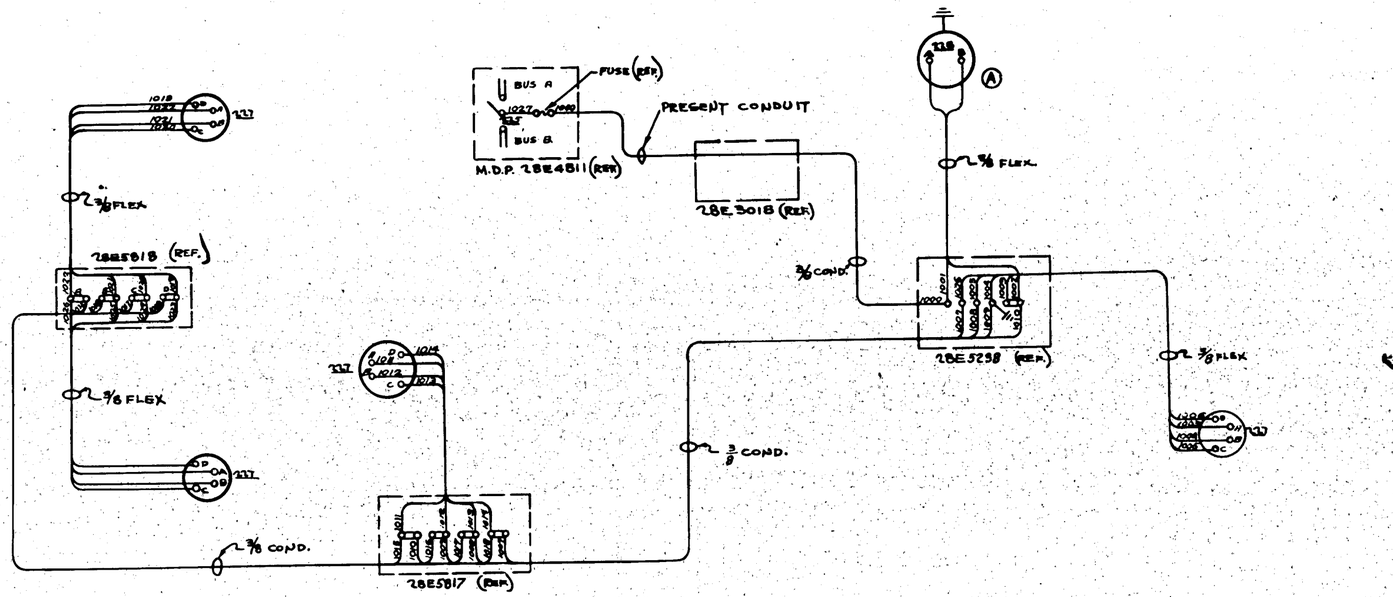

ITEM NO.	ITEM	MANUFACTURE	DRAWING	REQ
225	SWITCH	CUTLER HAMMER CORP.	AN3018	1
226	PLUG	CONNON ELEC. DEVEL. CO.	AN3106-125-3S	1
227	PLUG	CONNON ELEC. DEVEL. CO.	AN3106-145-2S	4

NOTE:
1. SHOP TO DETERMINE ACTUAL LENGTHS OF WIRES ON FIRST INSTALLATION AND NOTIFY ENG.
2. THIS IS NOT A CONSTRUCTION DRAWING.
3. WIRE NUMBERS OVER 1000 MAY BE DESIGNATED BY A STRIP OF RED CELLOPHANE TAPE

Ⓐ

WIRE NO.	1000	1001	1002	1003	1004	1005	1006	1007	1008	1009	1010	1011	1012	1013	1014	1015	1016	1017	1018	1019	1020	1021	1022	1023	1024	1025	1026	1027			
LENGTH FT.	28	2	2	1½	1½	1½	1½	9½	9½	9½	9½	1	1	1	1	81	81	81	81	2	2	2	2	4	4	4	4	1½			
WIRE SIZE	20	20	20	20	20	20	20	20	20	20	20	20	20	20	20	20	20	20	20	20	20	20	20	20	20	20	20	20			

CONT 81878
CONT 88476

ASSY DASH NO	MODEL	NEXT ASSY	QUAN
	PBY-5	28E5050	1
	PBY-5A	28E5666	1

REQUIREMENTS PER AIRPLANE

REPLACES

REPLACED BY

CALC WT

ACT WT

SCALE

STAMP PART NUMBER WHERE SHOWN

WIRE AS NOTED

PART NO	STOCK	MATERIAL	SPEC	LH REQ -0	RH REQ -2	LH REQ -3	RH REQ -4	LH REQ -5	RH

PARTS LIST PER ASSY.

A C
NAVY
HEAT TREAT
FINISH

ORDER
LANG
DRAFT
CHECK
STRUCT
MAT
APPROV
ENG
CHK
WELD

OPP HAND

NAME WIRING DIAGRAM - ELEC. - REMOTE INDICATING COMPASS

CONSOLIDATED AIRCRAFT CORP. SAN DIEGO, CALIF

DWG G
SIZE

28E5235

R 7-13-42

LET	ALTERATION	DATE	BY	LET	ALTERATION	DATE	BY

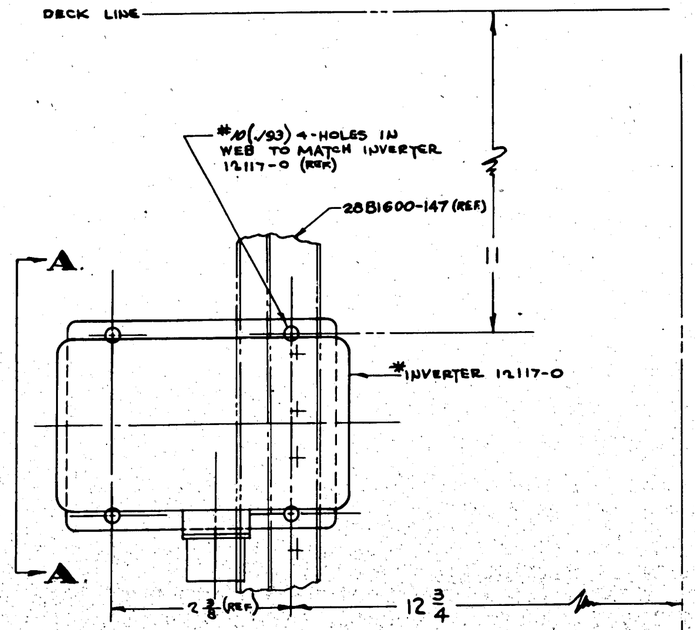

VIEW LOOKING AFT. STARB'D. SIDE.
BLK'D #6.0

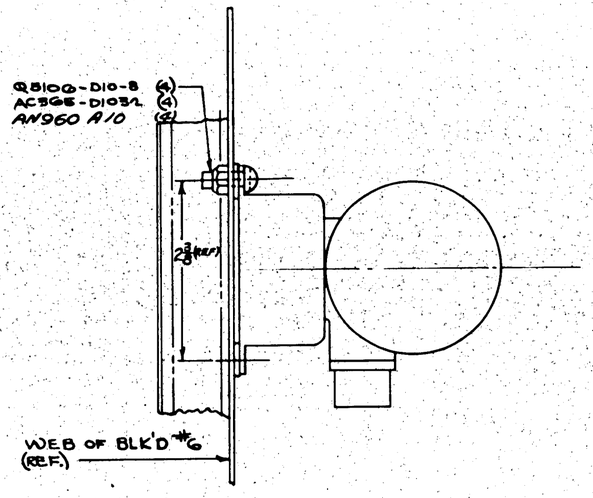

SECTION AA.

*GOVT. FURN. EQUIP.

*	12117-0	INVERTER	1
	AN960 A10		4
	AC3GE-D1032		4
	Q5106-D10-8		4

CONT 51876
CONT. 55476

ASSY DASH NO	MODEL	NEXT ASSY	REQ
-0	PBY-5	28E5234	1
-0	PBY-5A	28E5234	1

REQUIREMENTS PER AIRPLANE

REPLACES — CALC WT

REPLACED BY — ACT WT

LIST ON SHEET ONE ONLY FOR DRAWING OF SHEET OF 1/32 — SCALE 12"=1'-0"

STAMP PART NUMBER WHERE SHOWN

PART NO	STOCK	MATERIAL	SPEC	LH RH REQ -0	LH RH REQ -2	LH RH REQ -3	LH RH REQ -4	LH RH REQ -5

PARTS LIST PER ASSY

A C NAVY	NONE	NONE	6-29-42		GUIDER-BOWLES		ZUCK
HEAT TREAT		FINISH	DRAFT LAMB	CHECK MOORE	STRUCT	MAT	ENG HELE 7/20

NAME ASSY. & INSTALL-ELEC.- INDICATING COMPASS MOTOR GEN.

OPP HAND

CONSOLIDATED AIRCRAFT CORP. SAN DIEGO, CALIF.

SIZE G — DWG NO 28E5236

7/22

LET	ALTERATION	DATE	BY	
A	RELOCATE AN3064-4 &			E.O.
	AN3066-4. AN3064-8 &			
	AN3066-8 WAS AN3064-6 &			
	AN3066-6. WT CHG NEG.	9-5-42		
B	ADDED 28E5251-6 & NOTE			E.O.
	"CUT.... ASS'YS." NEG WT CHG.	10-22-42		56047A
C	CANCELLED -2 ASS'Y. REVISED			E.O.
	-0 & CREATED -3. NEG WT CHG.	10-22-42		61420
D	NOTE "APPLY --- ASS'YS." WAS			E.O.
	"CUT-OUT --- ASS'YS." WT CHG NEG	2-2-43		80857
E	ON FACE & IN B/M ADDED			
	28E6056-6(1) WT. CHG NEG.	3-17-43		
F	ADDED VIEW SHOWING			
	STENCILING. NO WT CHG	8/5/43		
G	FOR-3ASSY. AN3066-6(1)			
	WAS AN3066-8(1) & IN B/M			
	FOR-3ASSY AN3066-6(2)			
	WAS(1). NO WT. CHG.	9-7-43	DAY	

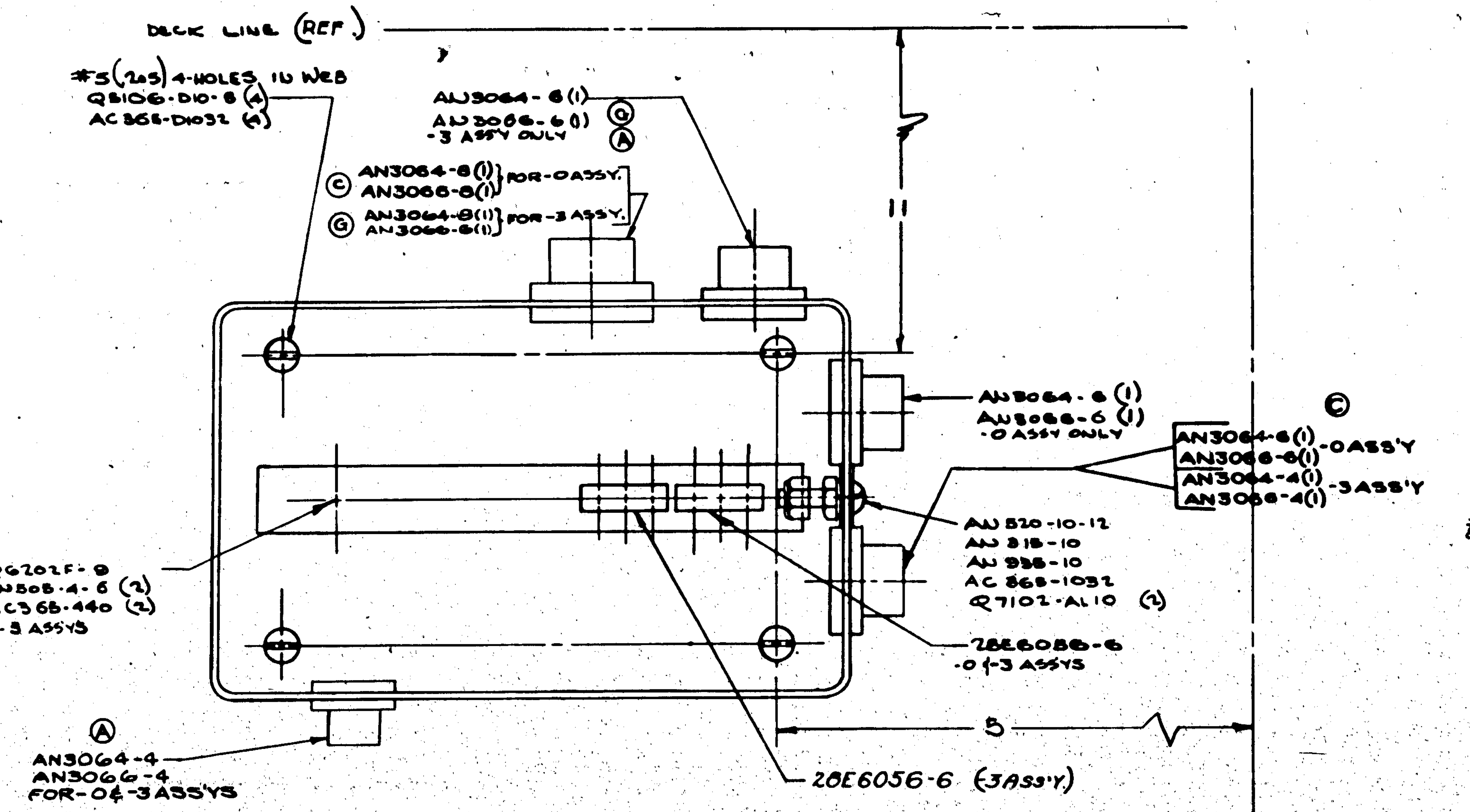

VIEW LOOKING AFT - FWD. SIDE OF BLK'D. #6.0

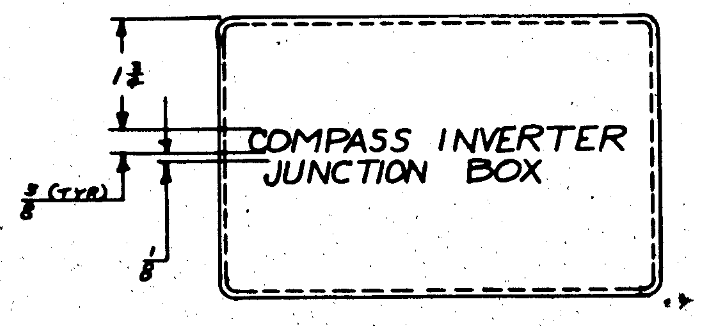

F VIEW SHOWING STENCILING IN 1/4" BLACK BLOCK LETTERS ON BOX COVER.
SCALE 6"=1'0"

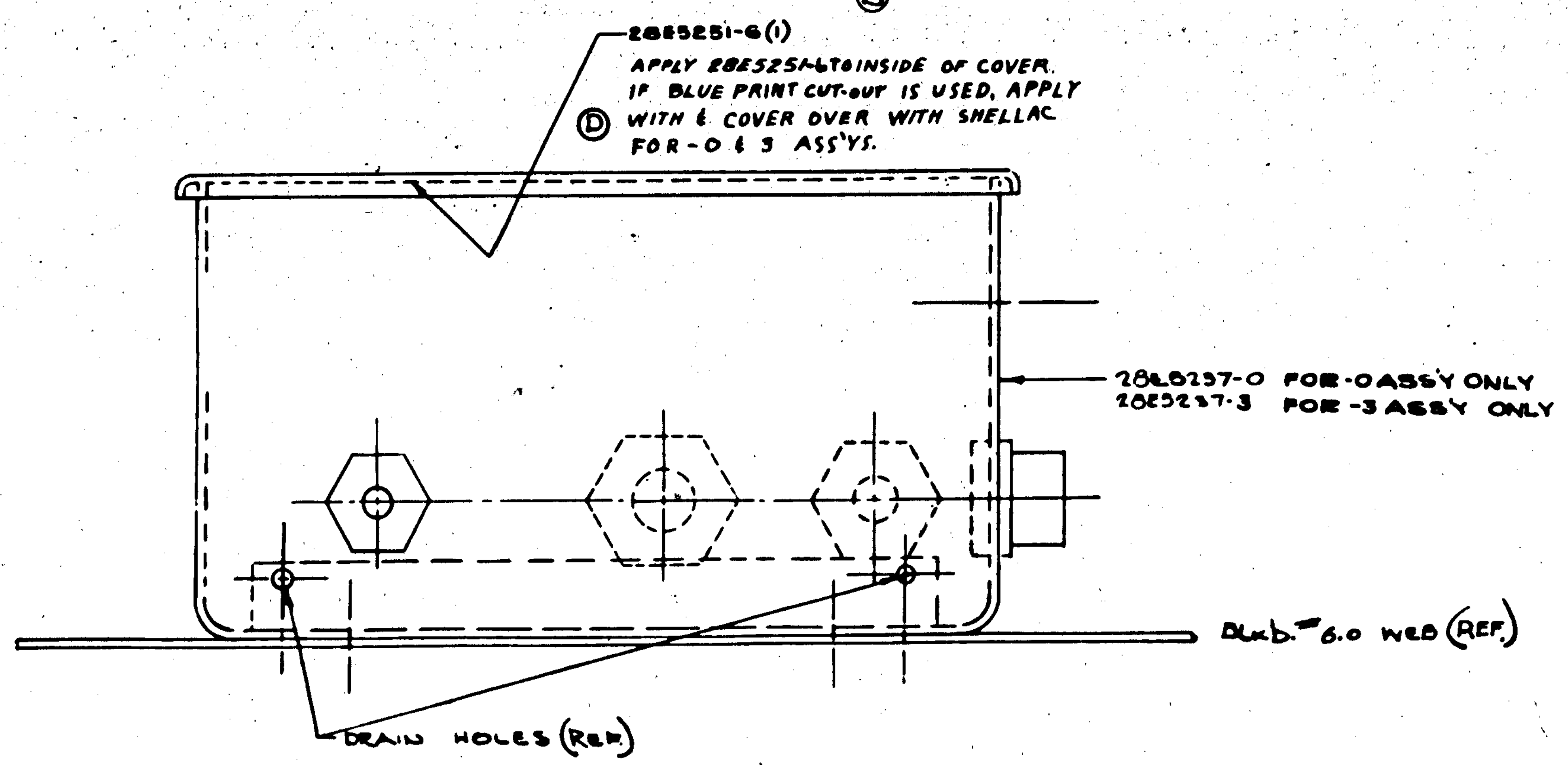

CP13595
"30 & ON (C.-91876) —
" 1-89 (C.-91876) —
CONT. 88476 —

ASSY DASH NO.	MODEL	NEXT ASSY	REQ.
-3	PBY-5A	28E5814	
-3	PBY-5	28E5814	
-0	PBY-5	28E5814	
-0	PBY-5A	28E5814	

REQUIREMENTS PER AIRPLANE

REPLACES — CALC WT

REPLACED BY — ACT WT

LIMIT OF DIMENSIONS UNLESS OTHERWISE SPECIFIED: 1/32 — SCALE 12"=1'-0"

STAMP PART NUMBER WHERE SHOWN

PART NO	STOCK	MATERIAL	SPEC	-0 REQ	-2 REQ	-3 REQ	-4 REQ	-5 REQ
AN3066-4				1		2		
AN3064-4				1		2		
AN3064-6				2		1		
AN3066-6				2		2		
AN3064-8				1		1		
AN3066-8				1				
AN345-10				1		1		
AN505-4-6				2		2		
AN520-10-12				1		1		
AN935-10				1		1		
AC365-440				2		2		
AC365-1032				1		1		
Q6202F-9				1		1		
Q7102-AL10				2		2		
28E6056-6				1		2		
28E5237-0				1				
AC365-D1032				4		4		
28E5251-6				1		1		
Q5106-D10-8				4		4		
28E5237-3						1		

PARTS LIST PER ASSY.

A C				SPRECHER	RUSSELL	7-22	ZUCK
NAVY NONE	DOTTED ON DETAIL	LANG	MOORE			ARMSTRONG	WOLD
HEAT TREAT	FINISH	DRAFT	CHECK	STRUCT	MAT	APPROV	ENG

NAME ASS'Y & INSTALL'N -ELEC -REMOTE INDICATING COMP. JUNCT. BLK' 6

OPP. HAND —

DWG. SIZE G — 28E5238

CONSOLIDATED AIRCRAFT CORP. SAN DIEGO, CALIF.

R

LET	ALTERATION	DATE	BY
F	REMOVED AN340 D10B2E (1) ADDED AC365-1032E (1) & AN 936-A10 (1) REQ. W.T.(N.G. 041-62)		

LET	ALTERATION	DATE	BY
A	REVISED AS NOTED		
B	[illegible]		
C	[illegible]		
D	[illegible]		
E	[illegible]		

#10 (.193) DIA.

3

5/8 DIA. HOLE

28W132 (REF)

28W129 (REF.)

INBD

(L.H. WING ONLY)

(E)	AN3D-7	(1)
	Q7006-13-064	(1)
(D)	Q808D-6-4	(1)
	Q812D-6-10	(1)
	AN310D3	(1)
	AN380-2-2	(1)

(HEAD OF BOLT CAN BE AT EITHER END.)

(D)	AN3D7	(1)
	Q808D6-4	(1)
(E)	Q7006-13-064	(1)
	Q812D-6-5	(1)
	AN310D3	(1)
	AN380-2-2	(1)

NOTE:— ADJUST THIS BOLT TO SHUT OFF SWITCH AT DESIRED POINT OF TRUNNION TRAVEL. THIS POINT NORMALLY SHOULD BE BETWEEN 2 AND 3 TURNS FROM THE END OF THE LEAD SCREW. (BETWEEN 1 AND 1 3/4" FROM THE END.) IN EXTREME CASES FURTHER ADJUSTMENT MAY BE OBTAINED BY REMOVAL OF BOLT OR BY USE OF A LONGER BOLT AS DESIRED.

	AN3D14	(1)
(D)	AN315D3R	(1)
	AN935-10	(1) LOCK WASHER

THREAD ALL THE WAY TO THE HEAD.

NOTE - MICROSW. HOUSING MUST BE BONDED TO WING STRUCTURE IN ACCORDANCE WITH 28E4047

℄ STA. 22

#51 (.067) DRILL ONE HOLE IN 28W129 (REF)

28E5248

28E5249

EXTREME LIMIT OF TRUNNION TRAVEL

1 (REF) APPROX.

WHEEL OF TRUNNION (REF.)

℄ TRACK

AN315DG-12 (1)
AC365D632 (1)
AN960AL6-L(1)

28W078 (REF) TRUNNION

29E3013

28B6033-6

5/16 D. HOLE THRU CORRUGATION

	AN515D8-26	(1)
	AC365D832	(1)
	Q810D6-10	(1)

COLE ELEC. CO. DPLF-1 (C.A.C. HOU. 1-25 & C.A.C. SW. 17-75)

NOTE-

(1) CAC SW 17-75 MAY BE PURCHASED FROM MICRO SWITCH CORP. FREEPORT, ILL. 91876 *90 (346 ON 88477 (ALL BUT 50-952-18) 50-952-18) 88477 * 91876 *BRANCH

(2) CAC HOU. 1-25 MAY BE PURCHASED FROM COLE ELEC. CO % CONDON YOUNG, LOS ANGELES, CALIF. 89976 *50-146

28E5621-8(1)
AC365-1032(1)
AN936-A10 (1)

5/16 D. HOLE THRU CORRUGATION

	AN515D8-10	(2)
	AC365D832	(2)
	Q810D6-10	(2)

Q810D6-10
AC365D428 (2)

28E6032-6

VIEW LOOKING FW'D

Q 5106	D428-8		
Q 7006	-13-064		
Q 812D	-6		
Q 810D	-10		
Q 808D	6-4		
AC 365	D428		
AC 365D	632		
AC 365D	832		
AN 960	AL6-L		
AN 935	-10		
AN 515D	8-10		
AN 515D	6-12		
AN 515D	8-26		
AN 380-2	-2		
AN 936	-A10		
AN 315D	3R		
AN 310	D3		
AN 3D	14		
AN 3D	7		
AC 365	-1032		
Q 812	D4-10		
COLE ELEC. CO. DPLF-1 (C.A.C. HOU. 1-25 & C.A.C. SW. 17-75)			
	28E5249		
	28E5248		
	28E5401-8		
	28E6032-6		
	28E6033-6		
	29E3013		

P8Y-5B	28E6021	1		
P8Y-5A	28E6336	1		
P8Y-5	28E5318	1		
2E AMN	28E6021	1		
P8Y-5B	28E6294	1		
P8Y5	28E6021	1		
P8Y5A	28E6021	1		
ITEM DASH NO.	MODEL	NEXT ASSY	QTY	

REQUIREMENTS PER AIRPLANE

DISPLACES .59 SALE QTY

REPLACED BY QTY QTY

Level of Responsibility Unless Otherwise Specified: V&M

SCALE 12"=1'0"

STAMP PART NUMBER WHERE SHOWN

PART NO | STOCK | MATERIAL | SPEC

PARTS LIST PER ASSY.

AC —— | ——

NAVY

HEAT TREAT | PINION | DRAFT

NAME INST-ELEC. FLOAT CONTROL DOWN SWITCH

CONSOLIDATED AIRCRAFT CORP. W

G | 28E5247

28E5247

R

LET	ALTERATION	DATE	BY
A	DIM. 80 3/16 WAS 11 7/8 RIVET FAILED --- SPAR, WAS FWD OF SPAR. RD WT CHG.	4-16-43	
B	CREATED -2 R/H ASSY. WT CHG MFG.	7-16-43	

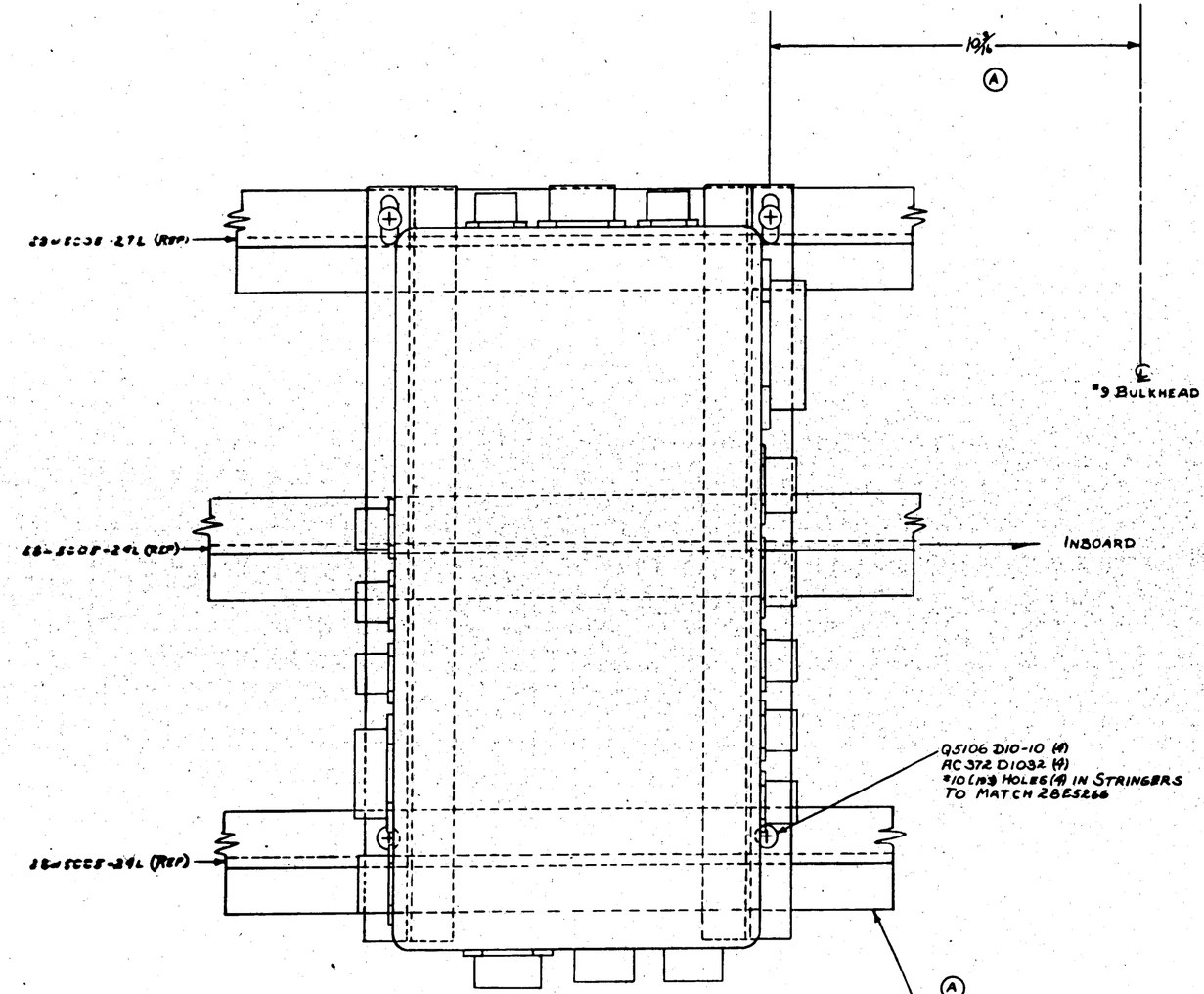

VIEW LOOKING UP INSIDE OF CENTER SECTION PORT SIDE. BETWEEN BLKHD'S #9 AND #10

FORWARD

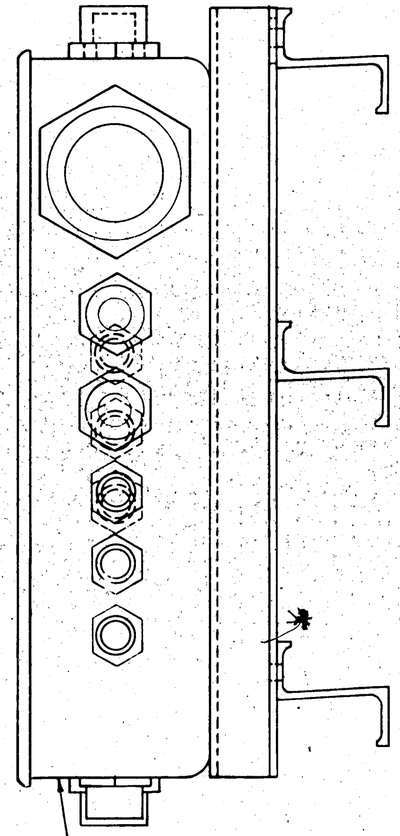

CAC #126-3
CONT. 91876-865HIPS
CONT. 91876 #91/ON

CAC #32

ASSY DASH NO.	MODEL	NEXT ASSY	REQ.
-2R	PBY-5	28E5265	1
-2L	PBY-5	28E5265	1
OR	PBY-5	28E5266	1
0L	PBY-5	28E5266	1

REQUIREMENTS PER AIRPLANE

REPLACES — 1.40 CALC. WT.

REPLACED BY — ACT. WT.

SCALE

STAMP PART NUMBER WHERE SHOWN

PART NO	STOCK	MATERIAL	SPEC	L/H REQ -1	R/H REQ -2	L/H REQ -3	R/H REQ -4	L/H REQ -5
28E5256-2L						1		
28E5256-2R							1	
Q5106 D10-10 AC 372 D1032				4	4	4	4	
28E5256-OR 28E5256-0L -4				1	1			

PARTS LIST PER ASSY.

AC
NAVY NONE
HEAT TREAT
NONE
FINISH

NAME INSTALL. -ELECT- BOMB BAY JUNCTION

CONSOLIDATED AIRCRAFT CORP. SAN DIEGO, CALIF.

DRAWN Kat CHECK STRESS APPROVED ENG

OPP HAND —

SIZE G

28E5255

R

E.O.A 64061

E.O.A 90340
MCR. #89-18

E.O.A 93419

MCR. #126-3
E.O.A 93580

LET	ALTERATION	DATE	BY
A	28E5257-01 LOG WAS 28E5257-6L, FOR 28E5257-7 NOWT. CHG.	1-14-43	ROSS
B	ADDED 28E5364-6(1) & 28E5364-7(1) (NOTE: SHELLAC = SHELLAC". NEG. WT. CHG.	1-19-43	ROSS
C	REVERSED POSITIONS OF 28E5266-01 & 28E5266-0R. NO WT. CHG.	1-19-43	ROSS
D	CREATED -2L & -2R ASSY. CAL. WT. FOR -2L & -2R ASSY. 1.5#	1-19-43	ROSS
E	ADDED 28E5257-2L & 28E5257-2R TO -2L & -2R ASSY. NO WT. CHG.	1-19-43	ROSS
F	ON FACE 28E5266-01 WAS 28E5266-0R & 28E5266-0R WAS 28E5266-01 NO WT. CHG.	4-11-43	
G	ADDED TO B/M 28E5266-01 & 01 (28E5266-0R) FOR -01R		

LET	ALTERATION	DATE	BY
	1-8 3/16 RIVETS. NO WT. CHG.	5-21-43	
H	ON FACE OF RING - ADDED 29E1038(2) IN B/M ADDED 29E1038(2 REQ.) FOR -01R & -2R NEG WT. CHG.	9-23-43	

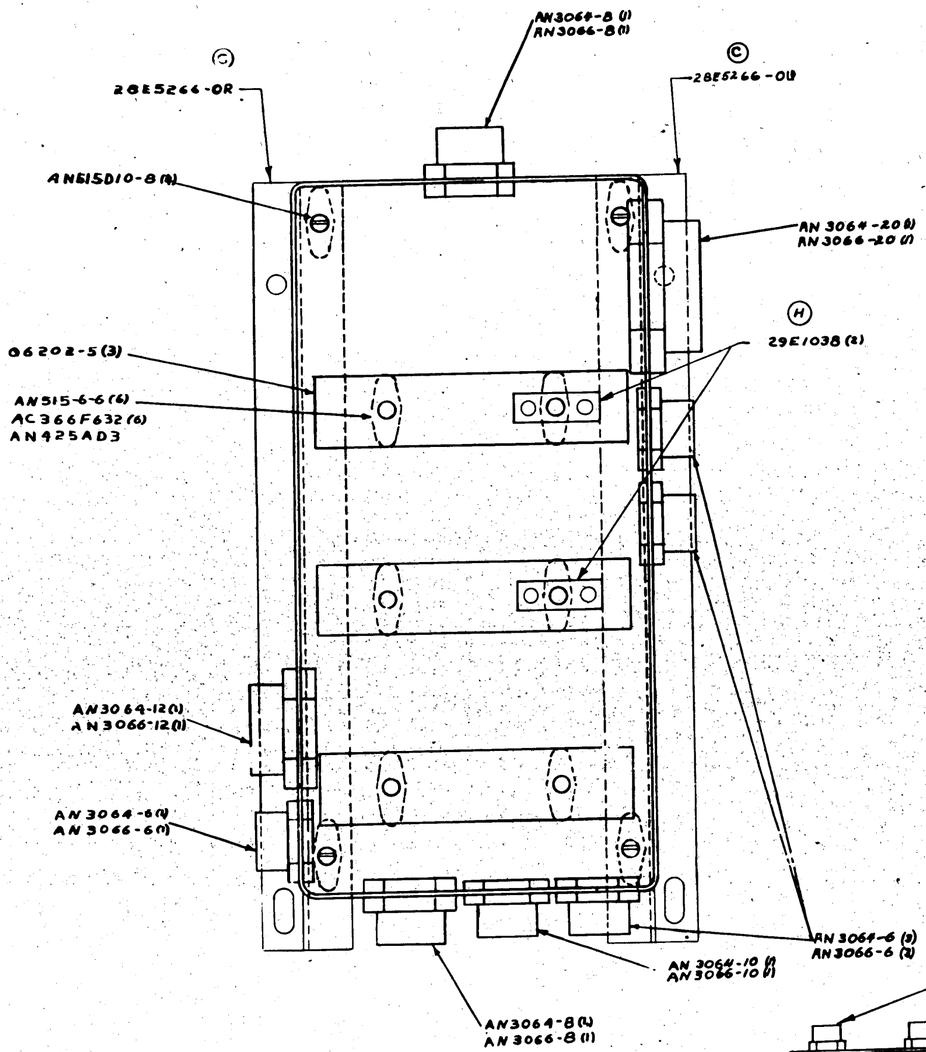

TOP VIEW SHOWING COVER REMOVED.

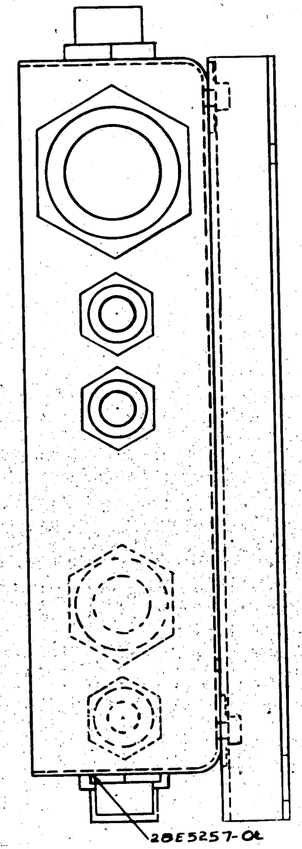

B

SHELLAC 28E5364-6 ON INSIDE OF COVER ON -01 ASSY, 28E5364-7 ON INSIDE OF COVER ON -0R ASSY, AND COVER WITH SHELLAC.

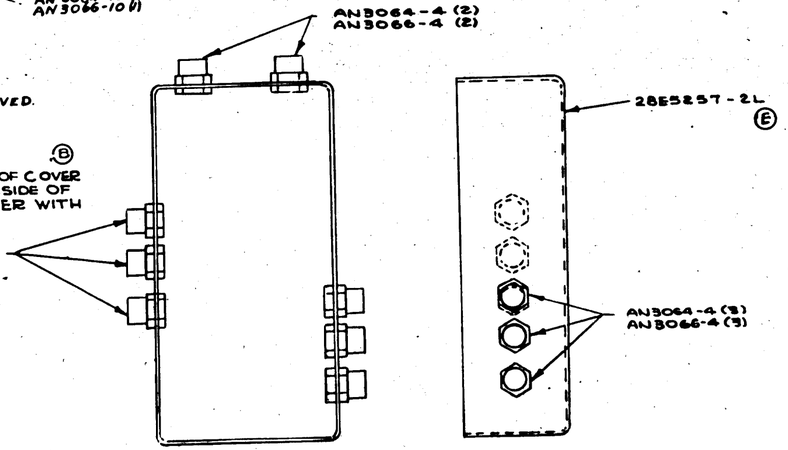

D -2L & -2R ASSY TO BE IDENTICAL TO -01 & -0R ASSY EXCEPT AS NOTED

ASSY	WT.
-2	1.5#
-0	1.40#

MCR 126-3
CONT. 01876 #916 ON EXCEPT MCR 126-3

DASH NO	MODEL	NEXT ASSY	REQ
-0R	PBY-5A	28E5255	1
-01	PBY-5A	28E5255	1
-2R	PBY-5	28E5255	1
-2L	PBY-5	28E5255	1
0R	PBY-5	28E5255	1
01	PBY-5	28E5255	1

REQUIREMENTS PER AIRPLANE

REPLACED — NOTED

REPLACED BY

STAMP PART NUMBER WHERE SHOWN

C.N. No. 4849

CAC #32

PART NO	STOCK	MATERIAL	SPEC	LH REQ -0	RH REQ -2	LH REQ -3	RH REQ -4	LH REQ -5	RH REQ -6
29E1038						2	2	2	2
28E5257-2R					1				
28E5257-2L				1					
AN3064-4						8	8		
AN3066-4						8	8		
28E5364-7					1		1		
28E5364-6				1		1			
AN3064-10						1	1		
AN3066-10						1	1		
Q6202-5						3	3	3	3
AN425AD3		RIVETS				6	6	6	6
AN515-6-6		"				6	6	6	6
AN515D10-8						1	1	1	1
AN3066-20		"				1	1	1	1
AN3066-12						2	2	2	2
AN3066-8						4	4	4	4
AN3066-6						1	1	1	1
AN3064-12						2	2	2	2
AN3064-8						4	4	4	4
AN3064-6						6	6	6	6
AC366F632									
28E5266-0R						1	1	1	1
28E5266-01						1	1	1	1
28E5257-0R						1	1	1	1
28E5257-0L						1	1	1	1

PARTS LIST PER ASSY.

A C		KING	9-3-42
NAVY NONE	NONE	DRAFT	CHECK
HEAT TREAT	FINISH	STRUCT	MAT

NAME BOX ASS'Y — ELECT — BOMB BAY JUNCTION

OPP HAND — R

CONSOLIDATED AIRCRAFT CORP. SAN DIEGO, CALIF.

DWG G

DWG 28E5256

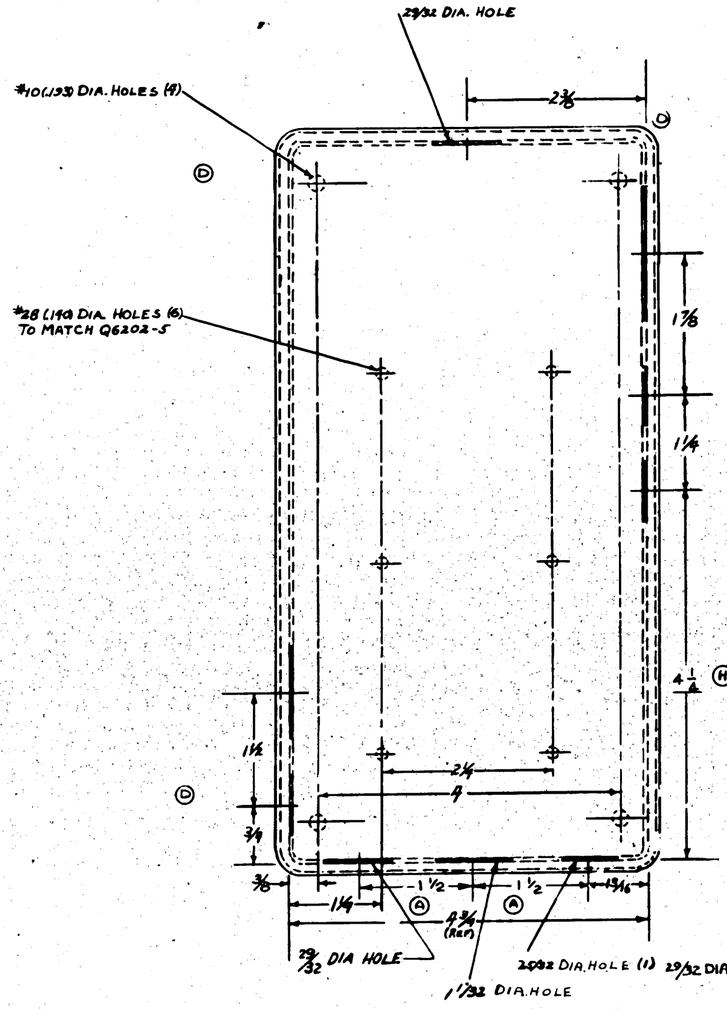

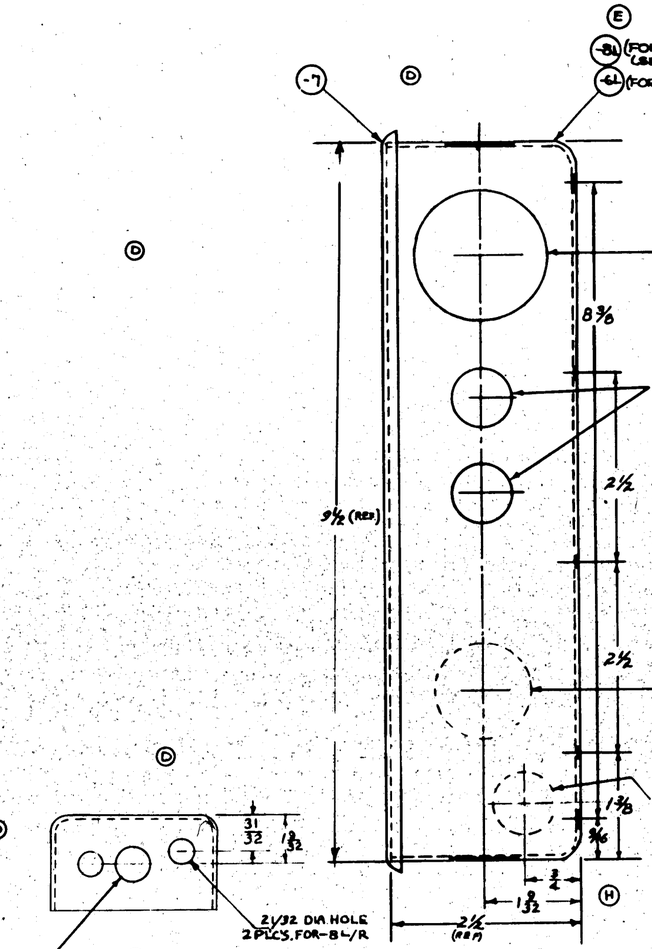

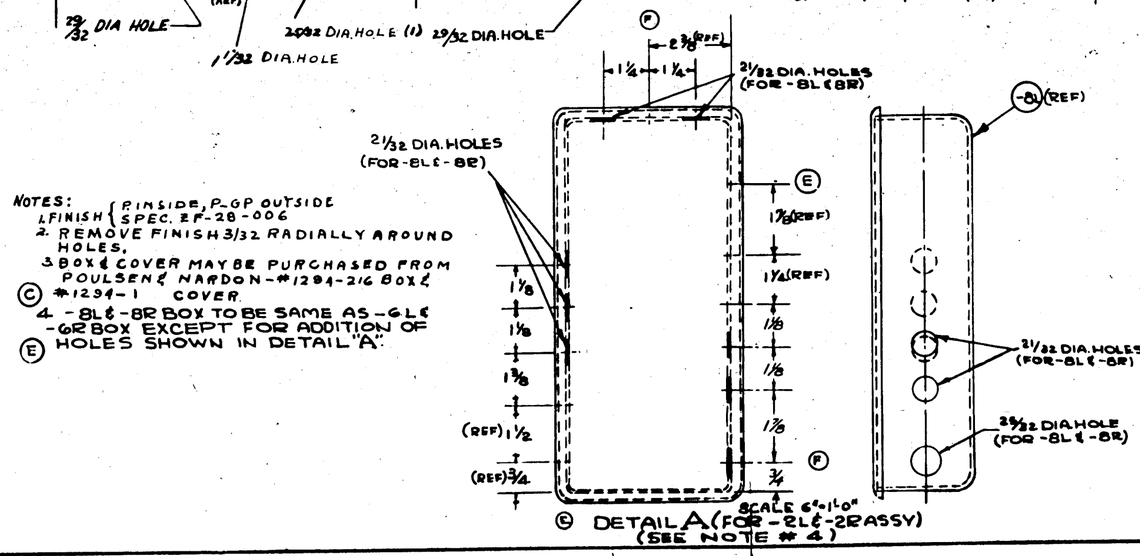

NOTES:
1. FINISH { P. INSIDE, P-GP OUTSIDE / SPEC. 2F-28-006
2. REMOVE FINISH 3/32 RADIALLY AROUND HOLES.
3. BOX & COVER MAY BE PURCHASED FROM POULSEN & NARDON - #1294-216 BOX & (C) #1294-1 COVER.
4. -8L & -8R BOX TO BE SAME AS -6L & -6R BOX EXCEPT FOR ADDITION OF (E) HOLES SHOWN IN DETAIL "A".

Q E.O.A74345
Q E.O.A74587
Q E.O.A93418
Q E.O.A93421
Q E.O.A93577 MCR.126-3
E.O.B2689 MC. R 126-3

LET	ALTERATION	DATE	BY
A	1 7/8 DIM. WAS 1 3/8 & 1 5/8. WAS 1 9/32. NO WT CHG.	1-16-43	R933
B	1 3/32 DIA. WAS 1 9/32. WT CHG. NEG.	1-16-43	R933
C	IN NOTE #3. 1294-1 W/O 1294-3 B.D. & IN (M) POULSEN & NARDON 1294-1 COVER & 1294-216 BOX WAS C.A.C. #51. NO WT CHG.	1-16-43	R933
D	ADDED 3/4 DIM (2 PLACES), 1 3/8 (2 PLACES) & 1 7/16 & NOTE DRILL --- HOLES" (AN960-D8(4) NAP 1128-10(4) 28E5-1149(4), Q3106-D832(4) & AN442-AD3 WT. CHG. NEG.	1-16-43	R933
E	CREATED -2L & -2R ASSY. WT. CHG. NEG.	1-16-43	R933
F	ON FACE OF DRWG. AT DETAIL "A" CHGD DIMS. 3/4 & 1 7/8 WERE 1 1/2 & 1 5/8 RESPECTIVELY. ADD TOP VIEW DETAIL "A" & CHGD DIM. 31/32 WAS 1 3/32.		

LET	ALTERATION	DATE	BY
G	NO WT. CHG. PER LIST BLOCK ALTERED	7-9-43	
G (AN)	TO AGREE WITH RELEASED		
H	4 1/4 WAS 4 7/8, 3/4 WAS 1 3/32, REMOVED AN960-D8(3), NAP1128-10(3) 28 RIMS (6), Q3106-D832(3) & AN442-AD2. WT. CHG. NEG.	7-9-43	

C.A.C. #32

-1L	PBY-5A	28E5286	1
-1R	PBY-5A	28E5286	1
-2R	PBY-5	28E5256	1
-2L	PBY-5	28E5256	1
-6R	PBY-5	28E5256	1
-6L	PBY-5	28E5256	1

C.13598
C 31876 61 SHIPS MCR 126-3
CONE 31878 #3 nylon EXCEPT MCR 126-3

ITEM SYM. NO.	MODEL	NEXT ASSY.	REQ.
REQUIREMENTS PER AIRPLANE			
REPLACES		480 Ship Set	
REPLACED BY		0 Ass'y.	
CHG. ON SUCCEEDING DRAWING SHEETS	SCALE 12"=1'-0"		
STAMP PART NUMBER WHERE SHOWN			

PART No	STOCK	MATERIAL	SPEC.	LH REQ.	RH REQ.	LH REQ.	RH REQ.	LH REQ.	RH REQ.
PARTS LIST PER ASSY.				-0	-0	-3	-4	-5	
-5R	POULSEN & NARDON 1294-216 BOX					1			
-5L	POULSEN & NARDON 1294-216 BOX						1		
-7	POULSEN & NARDON 1294-1 COVER			1	1	1	1		
-6R	POULSEN & NARDON 1294-216 BOX					1			
-6L	POULSEN & NARDON 1294-216 BOX						1		

A.C.		KING			
NAVY NONE	NOTED	9-2-43			9-2-43
HEAT TREAT	FINISH	DRAFT	CHECK	STRUCT	MAT	APPROV	DWG

NAME BOX-ELECT-BOMB BAY JUNCTION

OPP. HAND

DWG G 28E5257

CONSOLIDATED AIRCRAFT CORP. San Diego, Calif.

28E5257

VIEW A-A
SHOWING HOLE LOCATIONS
SCALE 6"=1'0"

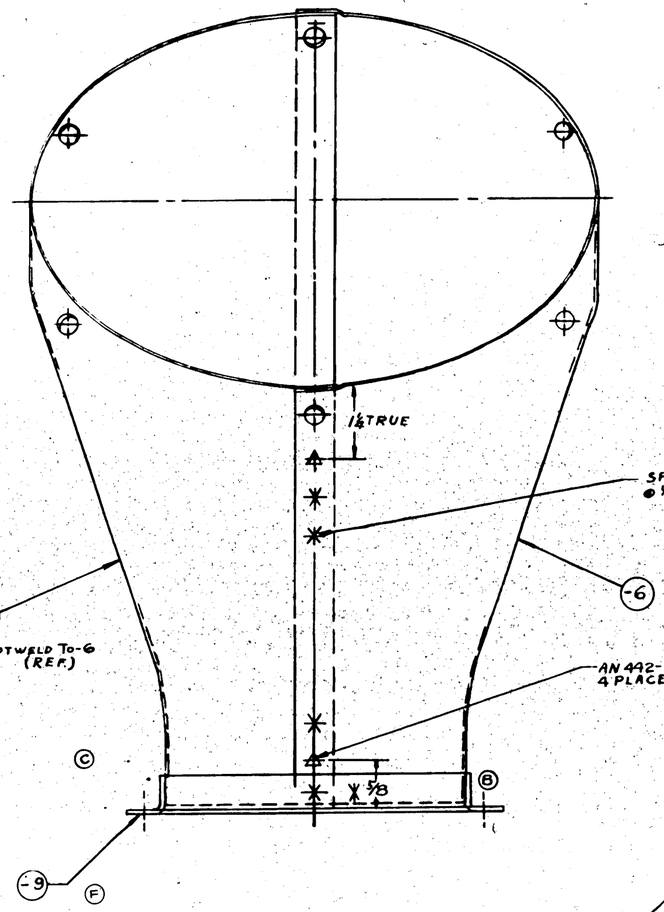

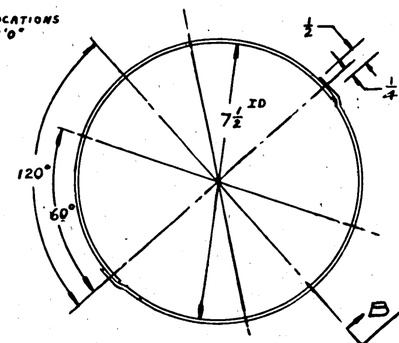

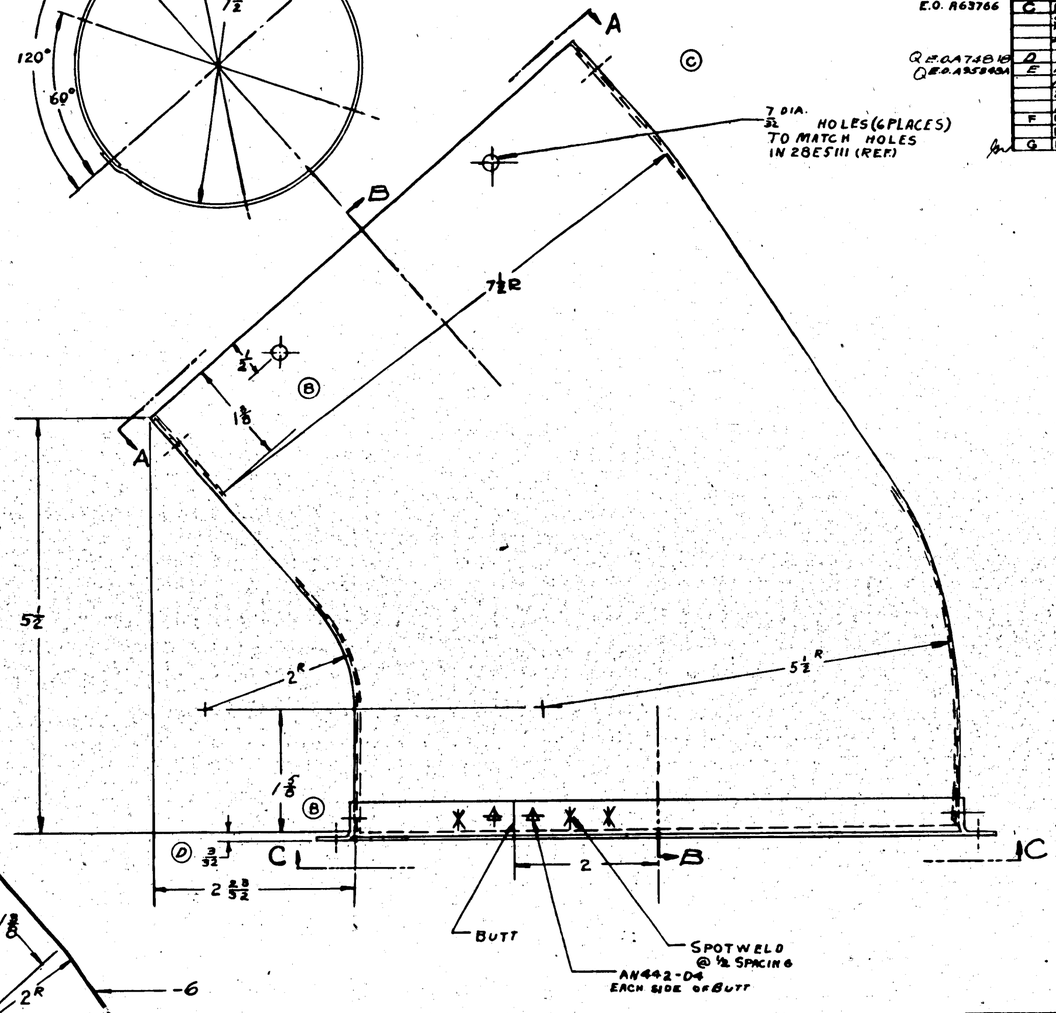

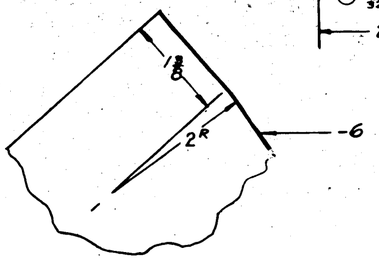

SECTION B-B

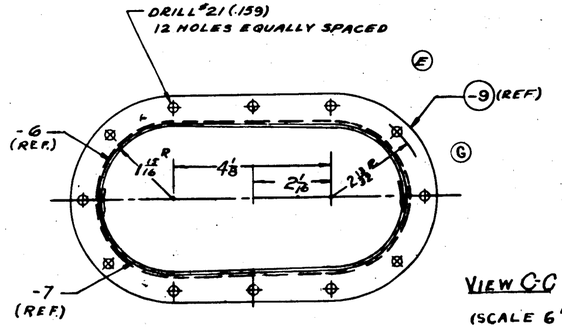

VIEW C-C (A)
(SCALE 6"=1'0")

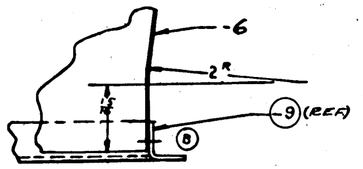

LET	ALTERATION	DATE	BY
	E.O. A 686 52		
A	REMOVED NOTE AN WIDTH 2"-C" IN DIM 28E5262-7 WAS 28E5262-7, NO WT. CHG.	10-22-42	MCCRAW
	E.O. A 64032		
B	REMOVED 3½ DIM. FROM SLOT VIEW & 1/64 DIM. IN SECT B-B DREW END OF -6 & -7 TO TANGENT PT. OF RADIUS OF 28E5262-7. 1/64 WAS 1/16 ADD KO 5½, 2 31/32 WAS 1 63/64 R NO WT. CHG.	10-29-42	MCCRAW
	E.O. A 63766		
C	REMOVED SECT. "D-D" NOTE IN SIDE VIEW & FRONT VIEW WOBBLE-7 THIS DIST. & DETAIL "E" & DIMS. 1 & 1¼, NO WT. CHG.	12-8-42	HOPKINS
D	ADDED DIM 3/32 NO WT CHG	1-15-43	MCCRAW
E	ADDED -9(1) WAS 28E5262-7(1) ADDED #21 (.159) (12) HOLES EQUA DIA 2 31/32 R FOR SHIPS 3466 ON NEG. WT CHG.	1-15-43	MCCRAW
F	REV'D 28E5262-7(1) LIMITS ON -9. NO WT. CHG.	3-1-43	BRAGAW
G	IN VIEW C-C, 2 31/32 R WAS 2 1/32 R.		

LET	ALTERATION	DATE	BY
G CONT.	NO WT. CHG.	3-1-43	BRAGAW

Q E.O. A 73818
O E.O. A 958494

C. № 91876
AIRPLANE № 31 F ON

AN442-D4

ASSY DASH NO.	MODEL	NEXT ASSY	QTY
-0	PBY-5	28E5248	1

REQUIREMENTS PER AIRPLANE
REPLACES
REPLACED BY
UNLESS OTHERWISE SPECIFIED ± 1/32
SCALE 12"=1'0" 6"=1'0"
STAMP PART NUMBER WHERE SHOWN

PART No	STOCK	MATERIAL	SPEC	-0 REQ	-3 REQ	-4 REQ	-5 REQ
				LH RH	LH RH	LH RH	LH RH
-9	K5401XE1½	AL. ALLOY	46A9-T	1			
-7	.040A/12½ x 13	ALC. ALLOY	47A8-T	1			
-6	.040A/12½ x 13	ALC. ALLOY	47A8-T	1			

PARTS LIST PER ASSY.

A C
NAVY
HEAT TREAT
2-P-26P
FINISH

DRAFT	CHECK	STRUCT	MAT	APPROV.	ENG
	9-11				

NAME OUTLET DUCT-LOWER CENTER
AUX. POWER PLANT.
CONSOLIDATED AIRCRAFT CORP. SAN DIEGO, CALIF.

OPP HAND
DWG G
28E5259

R 9-17-42.

LET	ALTERATION	DATE	BY
F (CONT.)	5½ D., ⅞, 4 ⅜, 5 ⅜, ⅞, 12 ⅝ R.L.		
	(2) ⅛ DIA. HOLE IN -7 (8 PLACES).		
	WT. CHG. NEG.	2-21-49	

LET	ALTERATION	DATE	BY
A	REMOVED SECTION B-B FROM NOTE ON VIEW B-B (DOUBLE) - OPER. INGS. " NO WT. CHG.	10-15-48	FURR
B	CHGD DIM. 6¾ TO 6 ²⁹/₃₂, 5⅜ TO 5 ²⁷/₃₂, 6¼ TO 8 ²⁷/₃₂, 8¼ TO 9 ²⁷/₃₂, 11⅛ TO 11 ⁷/₃₂, ⅞ TO ¹³/₁₆, 4¼ TO 4⅜, 8 TO 8 ¹⁵/₁₆, 1 ⅜ TO ⅞. ADDED -12 TO -A ASS'Y (LIMITED -2 TO -0 ASS'Y. NOTE "⅛ DIA HOLES IN -12 AND ⅜ DIA. HOLE IN -6 -3 ASS'Y ONLY." ON ⅜ DIA. HOLE) & Q4305-D3 & ADDED AN442-D4 & Q4305-D4. WT. CHG. NEG.	1-8-49	
C	DIM. 2 ⁹/₃₂ WAS 2 ⅜ & 5 ⅛ WAS 4⅜. WT. CHG. NEG.	1-21-49	
D	LIMITED -10 & NOTE "AC 366-DP JOBS ----(8 PLACES)" TO PBY-5 "28E-548. WT. CHG. NEG.	1-21-49	
E	1¼ R. WAS 1 ³⁹/₆₄ R.; ADDED 4⅜, 2¼ & 1⅞ DIM'S. WT. CHG. NEG.	3-21-49	
F	REVD -10, AC 366-DP-1032 (B); ANGLE A03; DIM'S. 2 ³⁹/₆₄ (2 PLACES), 2 ³¹/₆₄		

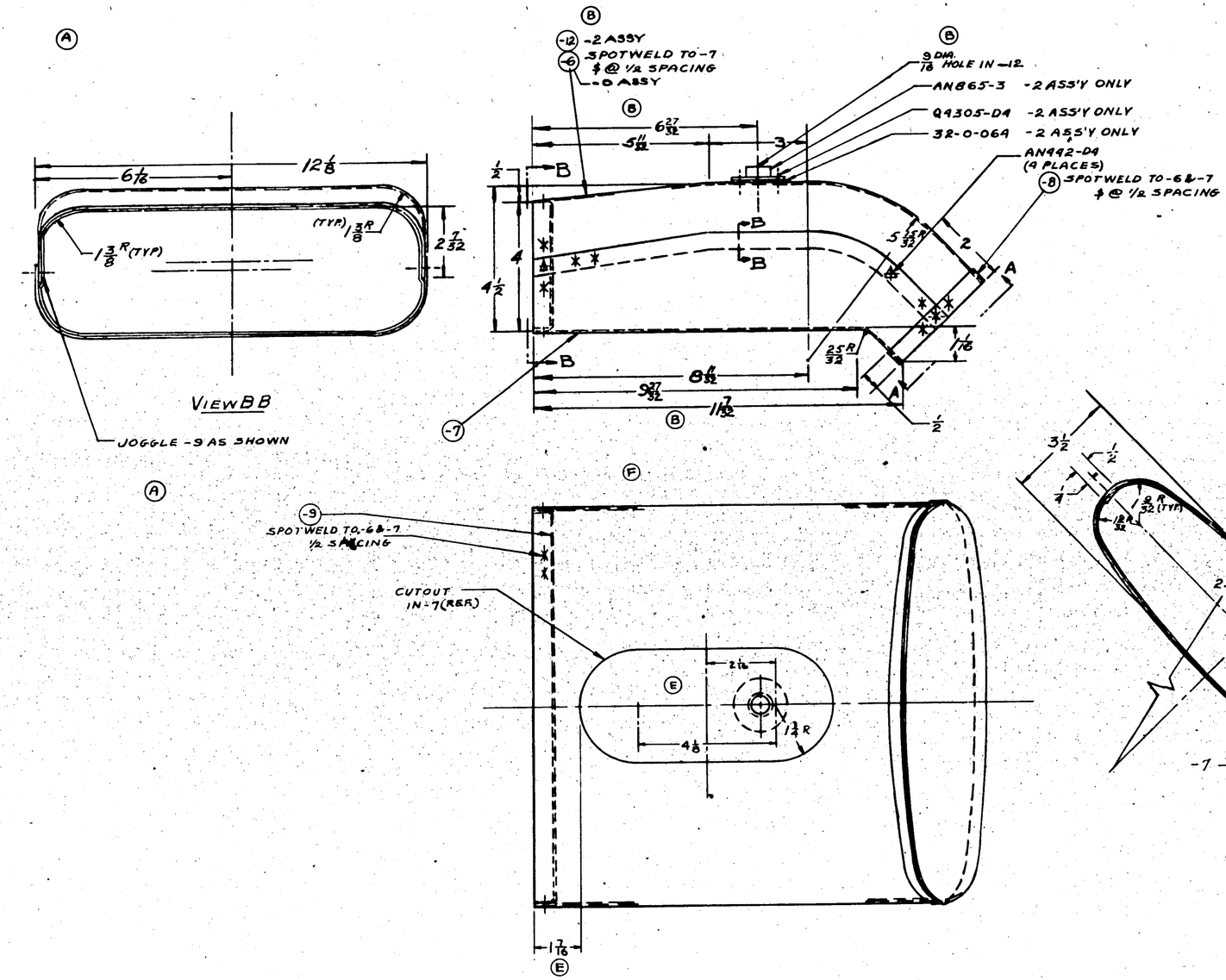

PART No	STOCK	MATERIAL	SPEC	LH REQ	RH REQ	LH REQ	RH REQ	LH REQ	RH REQ
	PARTS LIST PER ASSY.			-0	-2	-3	-4	-5	
-12	.040 X 21 X 17	AL. ALL. 52S	47A11-A		/				
-9	.040 X 19 X 11	ALC 24ST	47A8-T	/	/				
-8	.040 X 49 X 34	ALC 24ST	47A8-T	/	/				
-7	.040 X 21 X 17	AL. ALL. 52S	47A11-A	/					
-6	.040 X 21 X 17	AL. ALL. 52S	47A11-A	/					

AN442-D4
Q4305-D4
32-0-064
AN865-3

ASSY DASH NO.	MODEL	NEXT ASSY	QUAN.
-2	PBY-5	28E5268	/
-0	PBY-5	28E5269	/

C#91876 #91 & ON

REQUIREMENTS PER AIRPLANE

REPLACES — CALC. WT.

REPLACED BY — ACT. WT.

LAYOUT ON DRAWING UNLESS OTHERWISE SPECIFIED: 1/32

SCALE: 6" = 1'-0"

STAMP PART NUMBER WHERE SHOWN

AC NAVY -6 & -7

HEAT TREAT — 24S-T3

FINISH — Z-P-2GP

DRAFT — 9-24-48

M. H. 9-17

CHECK — STRESS — MAT — WEIGHT — ENG

NAME OUTLET DUCT-LOWER AUX. POWER PLANT

CONSOLIDATED AIRCRAFT CORP. SAN DIEGO, CALIF.

OPP HAND

SIZE G

DWG 28E5260

R 3/12

LET	ALTERATION	DATE	BY
A	REMOVED JOGGLES ON -6 & NOTE "JOGGLE--END" & REINSERT TEE STOVL PCHG 10-24-42		
B	ADDED 7/8 DIM REMOVED 1 3/8 DIM ON SIDE VIEW NO WT CHG	10-12-42	

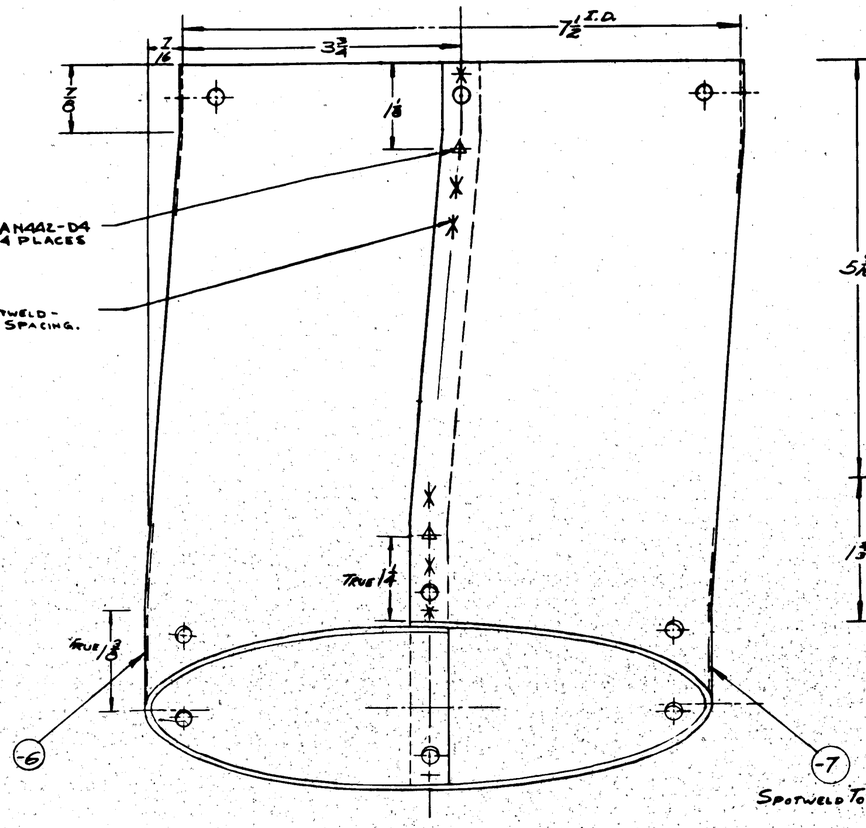

SPOTWELD TO -6

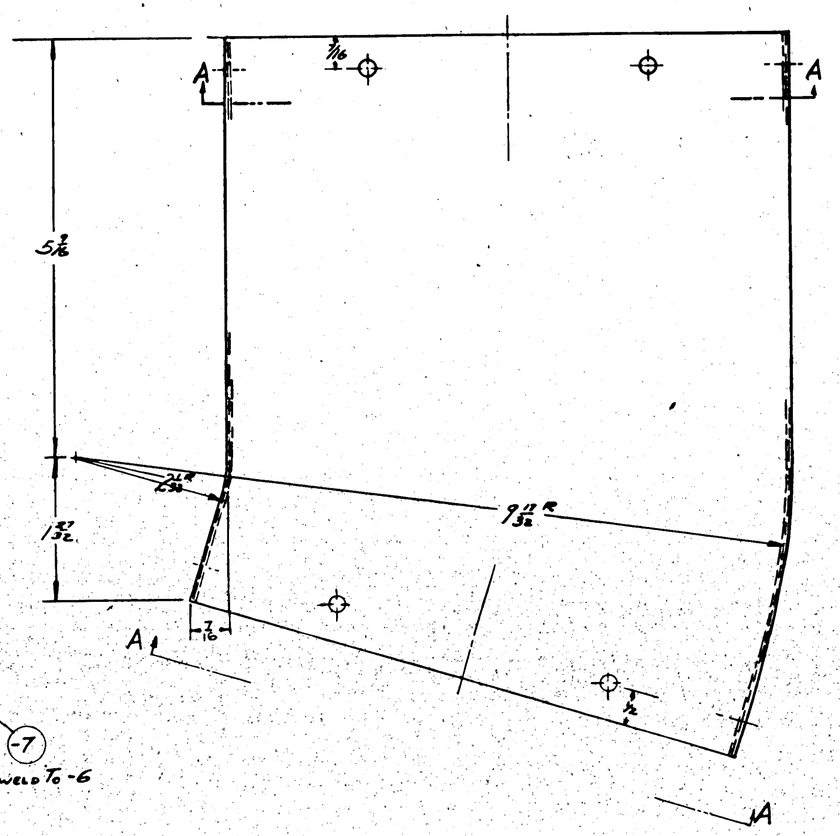

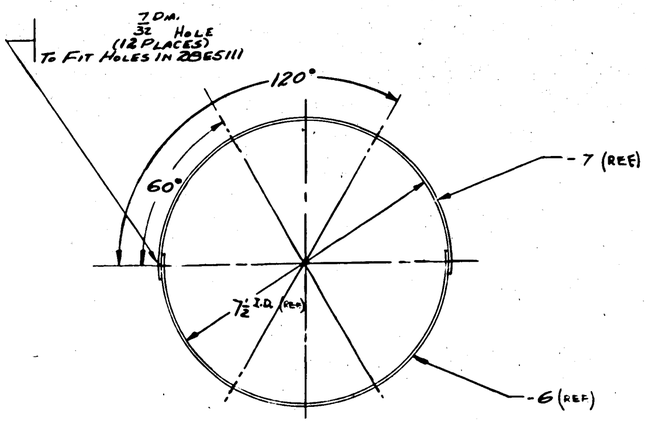

VIEW A-A
SHOWING HOLE LOCATIONS
SCALE 6"=1'0"

C# 91876
AIRPLANE #91 & ON

AN442AD4

ASSY DASH NO	MODEL	NEXT ASSY	QTY.
	PBY-5	28E5268	1

REQUIREMENTS PER AIRPLANE

REPLACES — *ALT QTY

REPLACED BY — ACT QTY

Lines on Drawing Indicate Direction of Grain

SCALE 12"=1'0" 6"=1'0"

STAMP PART NUMBER WHERE SHOWN

PART NO	STOCK	MATERIAL	SPEC	LH	RH	LH	RH	LH	RH	LH	RH
PARTS LIST PER ASSY.				REQ. -0		REQ. -2		REQ. -3		REQ. -4	REQ. -8
-7	.040 X 13 X 10 1/4	ALC 24ST	47AB-T	1							
4	.040 X 13 X 10 1/4	ALC 24ST	47AB-T		1						

A.C. — NAVY — HEAT TREAT — FINISH

Z-P-2GP

	DRAFT	CHECK	STRUCT	MATL	LAYOUT	TOOL
	8-27-42	9-1				

NAME OUTLET DUCT-CENTER-AUX. POWER PLANT.

OPP. HAND

CONSOLIDATED AIRCRAFT CORP. San Diego, Calif.

DWG G 28E5261

DWG

R 9-17-42

LET	ALTERATION	DATE	BY
A	TO FACE OF DWG. ADDED AC 366-DF1032 & Q4303-D3 (6 PLACES) DIM. 1/2 WAS 7/16 REMOVED SECT A-A NOTE: "JOGGLE-7---OPENING" ADDED NOTE "OVERLAP-6 AS SHOWN" NO WT. CHG.	4-12-42	B.W.H.
B	ROTATED DIRECTION OF AC 366DF-1032 30° ADDED NOTE DRAW---B NO WT. CHG.	9-16-42	

7/32 DIA. HOLE IN -6 (TO MATCH HOLES IN 28E5261 (6 PLACES)

120°

60°

5 27/32 I.D.

7 3/8 I.D.

5 1/2

10 DR. (.193) (8 PLACES) TO MATCH NUT PLATE LOCATIONS ON 28E5260 (REF.)

4 13/16

2 5/16

2 5/16

1/4

(A)

(B)

AC 366-DF1032 Q4303-D3 (6 PLACES)

17/32 R

OVERLAP-6 OVER-7 AS SHOWN

5/8 R (TYP.)

9 5/8

4 13/16

1 5/32

1/2

1 3/4

1

2 5/8

3 1/2

1/2 R

SPOTWELD @ 1/2 SPACING

AN442-AD4 (2 PLACES)

(5)

(7)

(B) NOTE: FORM AC 366-DF1032 TO CONTOUR OF -6.

C# 91876
#91EON

ASSY DASH NO.	MODEL	NEXT ASSY	REQ.
	P8Y-5	28E5268	1

AC366-DF1032
Q4303-D3
AN442-AD4

6

REQUIREMENTS PER AIRPLANE

DISPLACES — GALC WT

REPLACED BY — ACT WT

LIMIT OR DIMENSIONS SHOWN ON THIS DRAWING TO BE HELD: ±.V32

SCALE: 12" = 1'0"

STAMP PART NUMBER WHERE SHOWN

PART No	STOCK	MATERIAL	SPEC.	LH REQ. -0	RH REQ. -2	LH REQ. -3	RH REQ. -4	LH REQ. -5	RH REQ. -8
	PARTS LIST PER ASSY.								
-7	.040 X 22 X 18	AL ALL 5250	47A11-A	N					
-4	.040 X 22 X 18	AL ALL 5250	47A11-A		N				

AC
NAVY -BE-7
HEAT TREAT

Z-P-26P
FINISH

9-22-42 DRAFT — CHECK — STRUCT — MAT — APPROV — ENG.

NAME OUTLET DUCT - UPPER
AUX. POWER PLANT

OPP HAND

CONSOLIDATED AIRCRAFT CORP. SAN DIEGO, CALIF.

DWG G DOC

28E5263

R 9/17/42

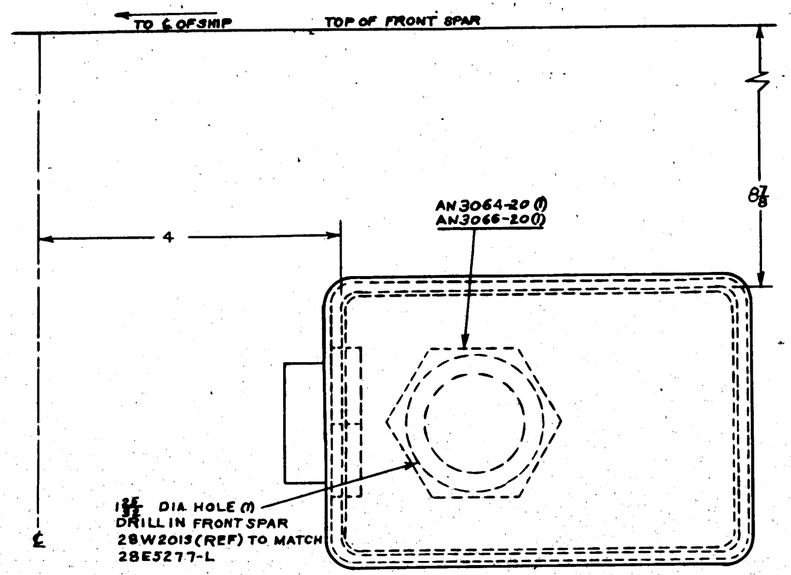

#3 BULK'HD CENTER SECTION

VIEW LOOKING AFT. PORT SIDE ON FACE OF FRONT SPAR CENTER SECTION FOR -0 ASSY ONLY

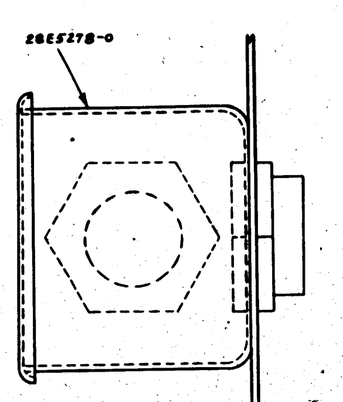

LET	ALTERATION	DATE	BY
A	REDRAWN CREATED -2 ASSY. WT CHG REQ		
B	REMOVED AN3066-6 (2) ADDED AN3066-8 (2) 17/32 DIA HOLES (2) WT CHG REQ.		
C	ADDED NOTE 2 & 17/32 DIA HOLE IN FRONT SPAR 28W2013 (REF)		
D	REMOVED -2 ASSY FROM FACE OF DWG. & FROM REQ BLOCK FOR PBY-5		

CON'T 91876 TO 91 TO 545

NOTE.
MOUNT BOX ON FRONT SPAR WITH BOX FITTINGS AS SHOWN

-0R	PBY-5	28E5263	1	AN3066-20	
-0L	PBY-5	28E5264	1	AN3064-20	
ASSY. SHOWN ON	MODEL	NEXT ASSY.	REQ.		

REQUIREMENTS PER AIRPLANE

REPLACES 28E5277 (9-9-42)	765	28E5278-0	
REPLACED BY	ACT. QTY.	-4	

PART NO	STOCK	MATERIAL	SPEC.	LH REQ.	RH REQ.	LH REQ.	RH REQ.	LH REQ.	RH REQ.	LH REQ.	RH REQ.
PARTS LIST PER ASSY.				-0		-2		-3		-4	-5

LOFT OR TEMPLATE DRAWING: — SCALE: 1

STAMP PART NUMBER WHERE SHOWN

AS NAVY NONE | NONE | KIND | HEAT TREAT | FINISH | DRAFT

NAME BOX INSTALL. -ELECT. FUSING INDICATOR SW. JUNCTION

CONSOLIDATED AIRCRAFT CORP. SAN DIEGO, CALIF.

OPP. NUMB 28E5279-R

SIZE G | DWG. NO. 28E5277

R

LET	ALTERATION	DATE	BY
A	ON FACE 13/16 DIA (3 HOLES) WERE 1/16 DIA (3 HOLES) NO WT CHG	1-18-41	MOE
B	CHG. LOC. OF 1 1/32 DIA. HOLE. NO WT CHG	1-18-41	MOE
C	ADDED -8 & PBY-5A REQ'TS WT CHG NOT	1-18-41	MOE
D	CHANGED #10 (193) HOLE FROM SOLID TO HIDDEN OUTLINE, NO WT. CHG.	6-25-42	AORD

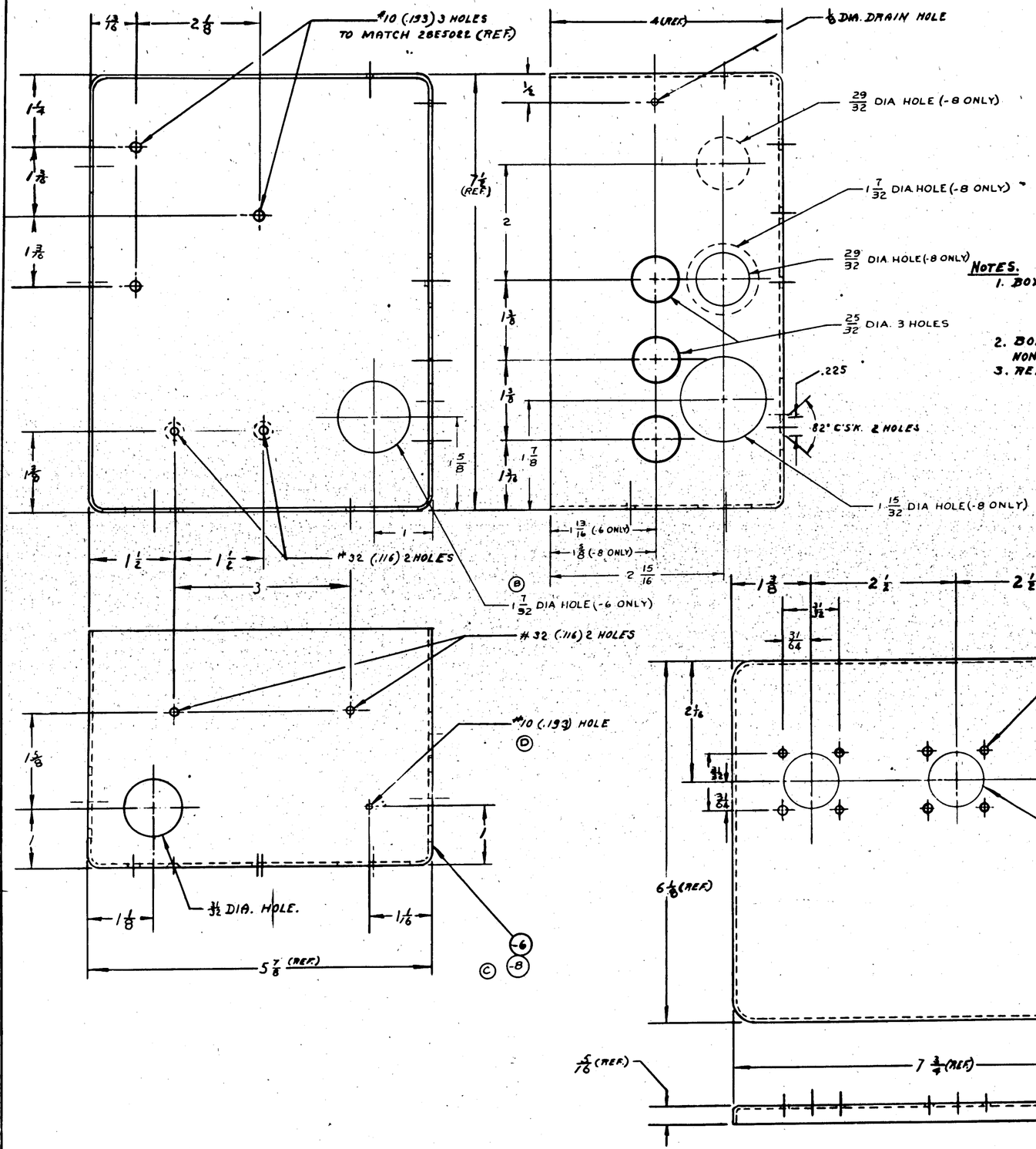

NOTES.

1. BOX MAY BE PURCHASED FROM MONARCH TOOL CO. SPECIFYING:
   BOX MT. 1024-400 } OR EQUIV.
   COVER CP. 1024
2. BOX TO BE FURNISHED WITH TIGHT FITTING COVER NON-LOSEABLE SCREWS AND AL. ALLOY WASHERS.
3. REMOVE FINISH 3/32 RADIALLY AROUND CONDUIT HOLES.

CAC CHG NO 164.1-2 C# 13595 C# 91876 #91 SON	-8	PBY-5A	28E5281 1
	-7	PBY-5	28E5281 1
	-6	PBY-5	28E5281 1

DASH NO.	MODEL	NEXT ASSY	REQ.

REQUIREMENTS PER AIRPLANE

REPLACED .96 CALC. WT.

REPLACED BY ACT. WT.

SCALE 12"=1'-0"

FIRST PART NUMBER WHERE SHOWN

-8 CAC BOX NO. 130-400
-7 CAC BOX
-6 NO. 130-400

PART No	STOCK	MATERIAL	SPEC.	LH REQ	RH REQ	LH REQ	RH REQ	LH REQ	RH REQ
PARTS LIST PER ASSY.				-0	-2	-3	-4	-5	

AC
NAVY
HEAT TREAT

F - INSIDE
P - SP - OUTSIDE
FINISH

RELEASED 9-10-42

DRAFT CHECK STRUCT MAT. APPROV ENG.

NAME BOX-ELEC.-A.C. POWER JUNCTION.

CONSOLIDATED AIRCRAFT CORP. SAN DIEGO, CALIF.

OPP. HAND

DWG. G SIZE 28E5280

R 9-17-42

28E5280

LET	ALTERATION	DATE	BY
A	FOR 1 ADDED 28E5367(1) & NOTE @ 1. WT. CHG. REQ.	1-21-42	
B	CREATED -3 ASSY & -4 ASSY WT. CHG. REQ.	1-21-42	
C	ADDED STENCIL & NOTE- "STENCIL ---- ONLY" AS PER ECN	4/27/42	
D	ON FACE: ADDED NOTE @ 2 "SHELLAC ---- (-4 ASS'Y.)" IN B/M ADDED 28E5852 TO -4 ASS'Y. NEG. WT. CHG.	8-5-42	

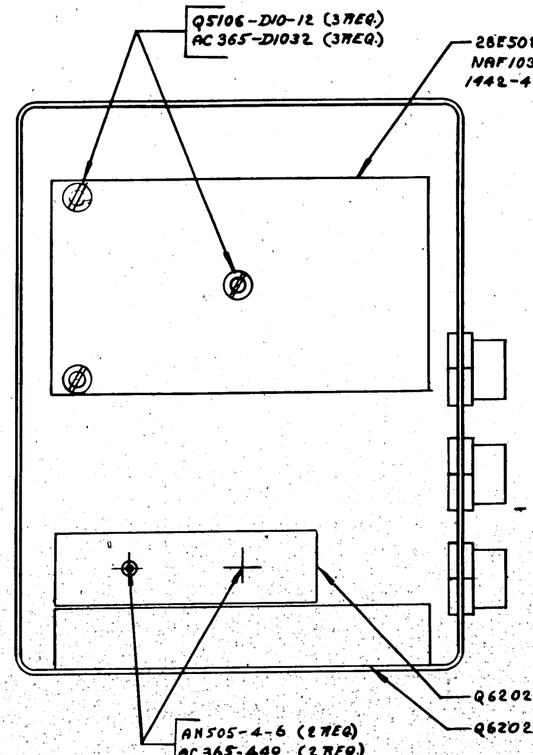

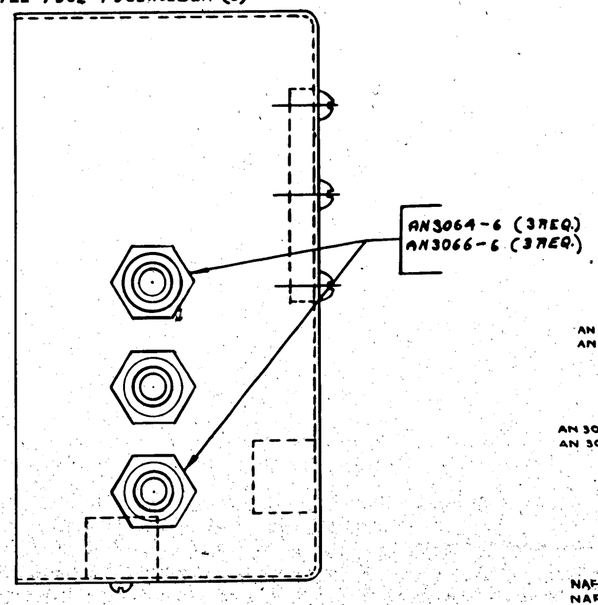

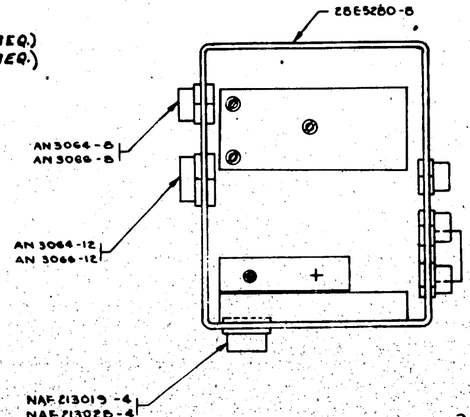

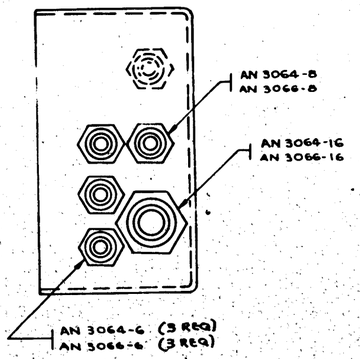

-3 ASS'Y
SCALE: 6"=1'0"

-3 IDENTICAL TO -0 ASSY EXCEPT AS SHOWN

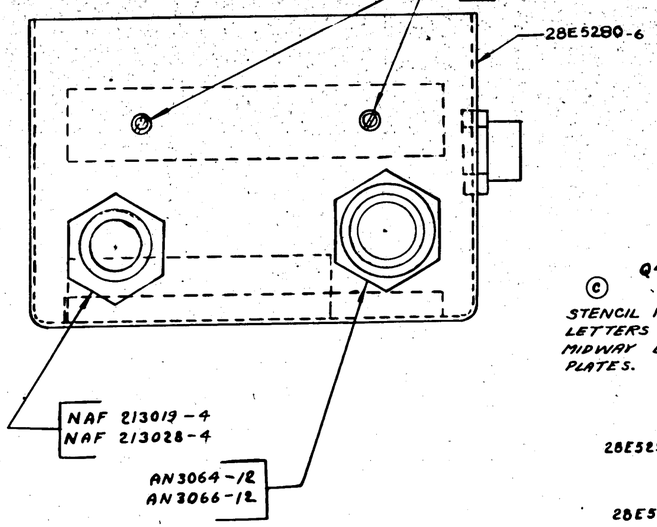

-0 ASS'Y.

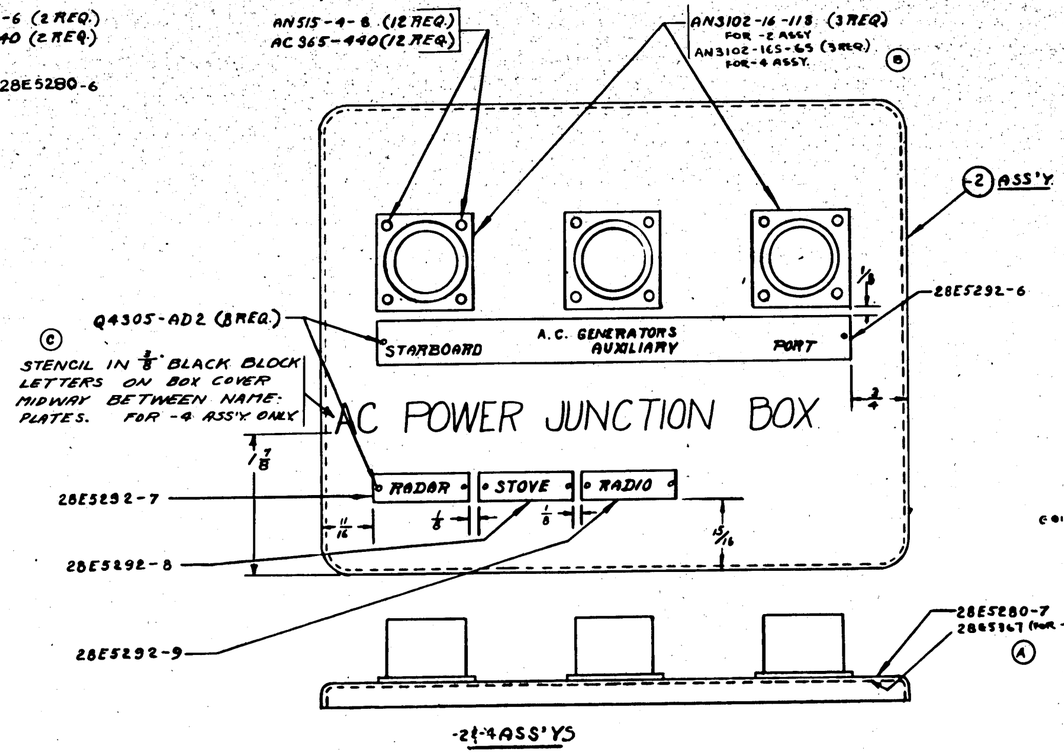

-2-4 ASS'YS

NOTE:
(1) SHELLAC 28E5367 TO INSIDE OF COVER 28E5280-7(REF) & COVER WITH SHELLAC
(2) SHELLAC 28E5852 IDENTIFICATION (A) TO INSIDE OF COVER - COVER WITH SHELLAC - (FOR -4 ASS'Y.)

PART NO	STOCK	MATERIAL	SPEC	LH REQ	RH REQ	LH REQ	RH REQ	LH REQ	RH REQ
28E5852									3
AN 3102-16S-65									
1442-4AG	LITTLE FUSE HOLDER			3		3			
NAF1034-4-10				6		6			
AN3066-10									
AC365-6				1		1			
AC365-4									
AN3066-8						2			
AC365-D1032					8		8		
AC365-D12				3		3			
AN3066-12						3			
AC365-440				4	12	4	12		
AN3066-8						2			
AN505-4-6				2		2			
AN515-4-8					12		12		
AN515-4-6				2		2			
NAF1034-4				1		1			
NAF2130-2864				1		1			
AN3064-12						3			
AN3064-8						3			
AN3066-12						3			
AN3066-8						3			
AN3102-16-118					3				
28E5280-8				1					
28E5026-3				1					
28E5292-7				1					
28E5292-8				1					
28E5292-9				1					
28E5280-7						1			
28E5280-6						1			
28E5280-5						1			
28E5280-4						1			
28E5280-3						1			
28E5280-2						1			
28E5280-1						1			
28E5280-0	CAC XOR No. 130-4404					1			
PART NO	STOCK	MATERIAL	SPEC	-0 REQ	-2 REQ	-3 REQ	-4 REQ	-5 REQ	

PARTS LIST PER ASSY.

PART NO	MODEL	NEXT ASSY.	QTY.
-4	P2V-5A	28E5282	1
-3	P2V-5A	28E5281	1
-2	P2V-5	28E5282	1
-0	P2V-5	28E5281	1

REQUIREMENTS PER AIRPLANE
REPLACED 2.13 Stock Qty.
REPLACED BY Act. Qty.
Unit for Stockroom Records: Ea.
Unit for Engineering Records: Ea.
SCALE 12"=1'0"
STAMP PART NUMBER WHERE SHOWN

A.C.
NAVY
HEAT TREAT
FINISH
KELLECHE 9-11-42
DRAFT CHECK STRUCT MAT APPROVED ENG

NAME BOX ASS'Y-ELEC.-A.C. POWER JUNCTION
CONSOLIDATED AIRCRAFT CORP. SAN DIEGO, CALIF.
OPP. HAND
DWG. G SIZE 28E5281

R-9-17-42 28E5382

LTR	ALTERATION	DATE	BY
A	RELOCATED 17/32 DIA. HOLE. DIM. 17/16 WAS 3 1/16. NO WT. CHG.	1-14-43	
B	ADDED 28E5360 (1) TO -7 ASS'Y. ADDED NOTE "4". WT. CHG. NEG.	1-16-43	
C	-7 PART WAS -7 ASS'Y. CREATED -0 ASS'Y. NO WT. CHG.	1-17-43	

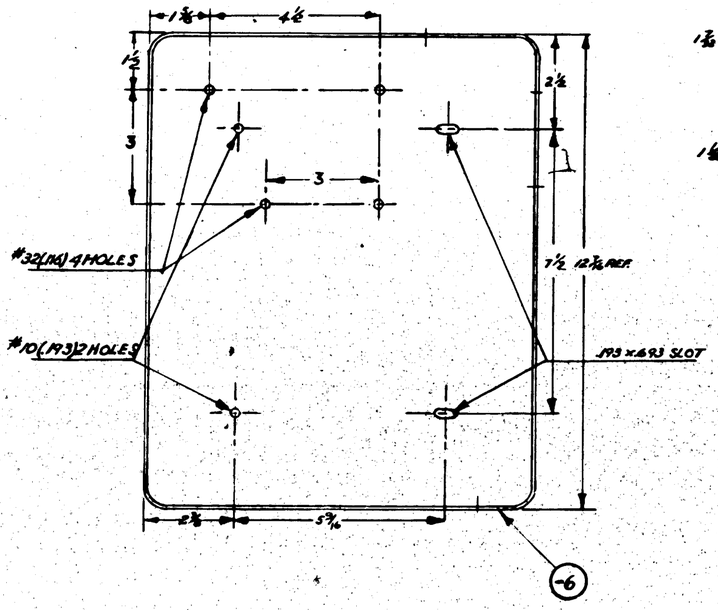

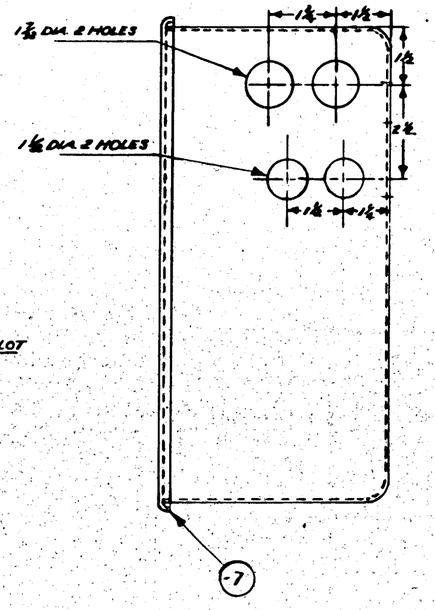

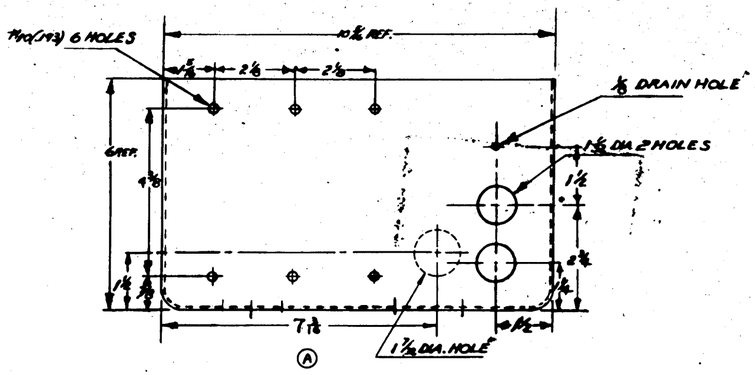

NOTES:

1. BOX MAY BE PURCHASED FROM POULSEN & NORDON CO. SPECIFYING
   (a) P&N 1516-600N BOX
   (b) P&N 1516-350 COVER
2. BOX TO BE FURNISHED WITH TIGHT FITTING COVER, NON LOSEABLE SCREWS, & DURAL WASHERS
3. REMOVE FINISH 3/4 RADIALLY AROUND CONDUIT HOLES
4. (B) SHELLAC 28E5360 TO INSIDE OF COVER 28E5284-7 (REF.)

C.91876 "BOX (ON -[illegible]

PART No	STOCK	MATERIAL	SPEC.	LH RH REQ	LH RH REQ	LH RH REQ	LH RH REQ	LH RH REQ
PARTS LIST PER ASSY.				-0	-2	-3	-4	-5
					C.A.& B. BOX NO. 600N			

28E5360

REQUIREMENTS PER AIRPLANE

REPLACES — GALS. WT.

REPLACED BY — ASY. WT.

LIST ON DRAWING SHOWING — SCALE 6"/1.0"

STAMP PART NUMBER WHERE SHOWN

A C
NAVY
HEAT TREAT
FINISH 1-69 Primer
DRAFT CHECK STRUCT MAT APPROV ENG

NAME BOX-ELEC-AC. CONDENSER

OPP. HAND

DWG. G SIZE 28E-5284

CONSOLIDATED AIRCRAFT CORP. San Diego, Calif.

LET	ALTERATION	DATE	BY	LET	ALTERATION	DATE	BY
				A	LIMT'D ALM2.2-12(3), ZH5101 (3), Q5106D10-8(6) & AC365-D1032(6) TO PBY-5 #91-260. REPLACED BY 28E5392(6), CAC-CAPA160 (3), AC365-1032(6) & Q7102AL10(12) & AN520-10-8(6) FOR PBY-5 #261 & ON. ADDED NOTE "WASHER (1)--- BOX" WT. CHG. NEG.	1-20-43	

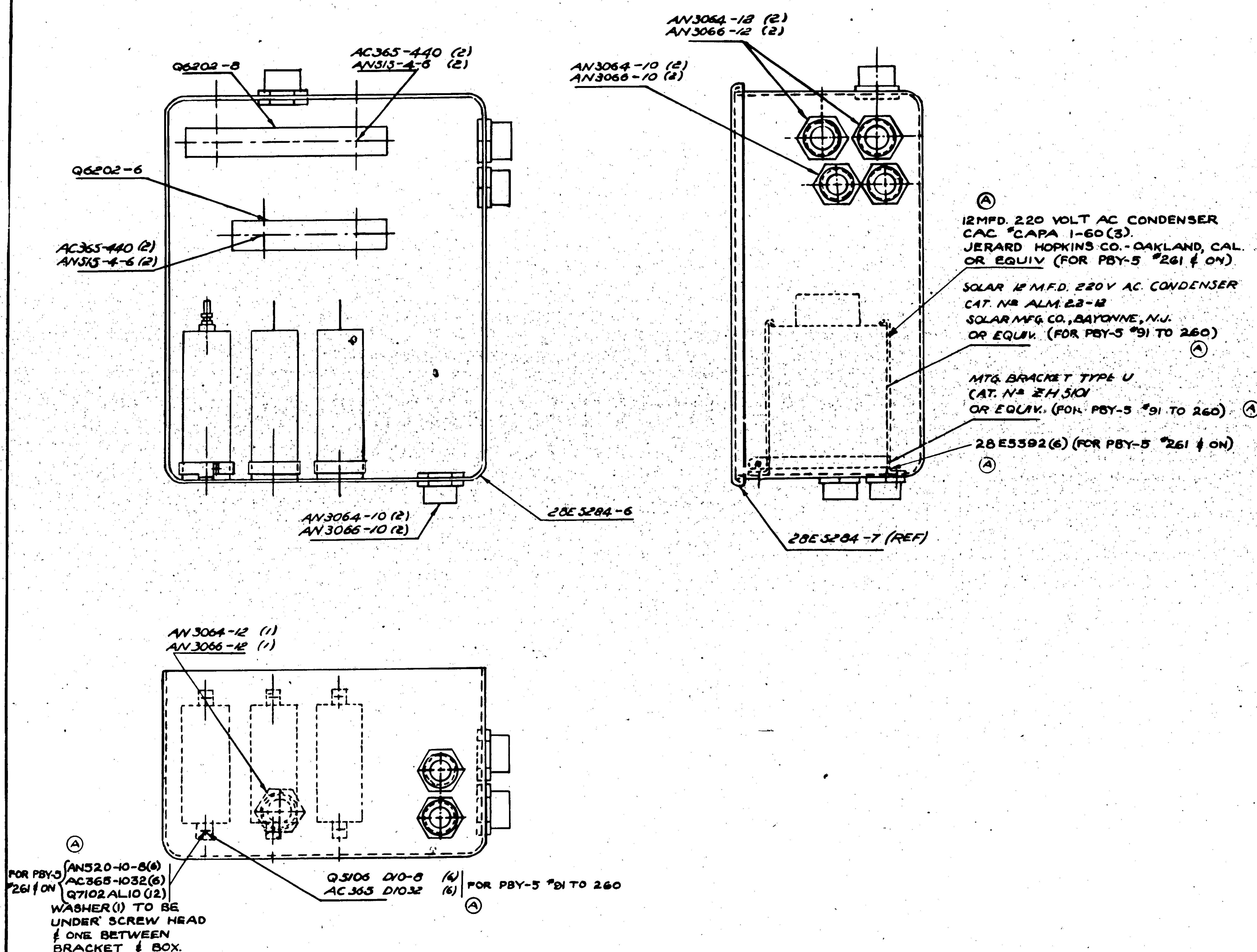

PART No	STOCK	MATERIAL	SPEC.	REQ. -0
28E5392	JERARD HOPKINS CO. OR EQUIV. FOR PBY-5 #261 & ON			6
CAC #CAPA160				3
Q7102AL10				12
AN520-10-8				6
AC365-1032				6
ALM2.2-12	SOLAR MFG. CO., BAYONNE, N.J. (FOR PBY-5 #91 TO 260)			3
ZH5101				3
AC365-440				4
AC365D1032	FOR PBY-5 #91 TO 260			6
Q5106D10-8				6
Q6202-6				1
Q6202-8				1
AN515-4-6				4
AN3066-12				3
AN3064-12				3
AN3066-10				4
AN3064-10				4
28E5284-6				1

PARTS LIST PER ASSY.

ASSY. DASH No.	MODEL	NEXT ASSY.	REQ.
0	PBY-5	28E5286	1

#91 & ON C-8574

REQUIREMENTS PER AIRPLANE

REPLACES — CALC. WT.

REPLACED BY — ACT. WT.

SCALE 6" = 1'-0"

STAMP PART NUMBER WHERE SHOWN

AC — NAVY — HEAT TREAT — FINISH

DRAFT 9-11-42 — CHECK — STRUCT — MAT — APPROV — ENG.

OPP. HAND

NAME BOX ASSEMBLY ELEC. A.C. CONDENSER

DWG. SIZE G — 28E5285

CONSOLIDATED AIRCRAFT CORP. SAN DIEGO, CALIF.

R 8/19/42

LET	ALTERATION	DATE	BY
A	Q5106 D10-8 (6) WAS (12); ADDED Q8106 D8-16 (4) & Q5106 D10-16 (4) WT. CHG. NEG.	3-16-43	
B	NEXT ASS'Y. 28E5302 WAS 28A1013, NO WT. CHG.	3-16-43	
C	ADDED "AUX. A.C." & "AUX. D.C." & NOTE "3/8 LETTERING---SURFACE" (2 PLACES). NO WT. CHG.	8-10-43	

5/16

2 (REF)

19 1/4

STRINGER #527

28E5288

28E5290-7

28E5289

Q5106-D10-16(4) Q8106-16 (4) Ⓐ

STATION #4.25

#10 (.193) 4 HOLES IN STRINGER TO MATCH HOLES IN 28E5288 (REF)

5/16

STRINGER #529

Q5106-D10-8 (4) AC365-D1032 (4)

STATION #4.375

28E5299-L

STATION #4.5

5 7/8 (REF)

7/16

#10 (.193) 4 HOLES IN STRINGERS TO MATCH HOLES IN 28E5299 (REF)

*A.C. REGULATOR ECLIPSE #D-106421

28E5299-R

AUX. A.C.

3/8 LETTERING BLACK DECAL ON SKIN SURFACE Ⓒ

*D.C. REGULATOR ECLIPSE #D-106696

* DENOTES G.F.F

△ CONT #91876 SHIPS #DIXON

STRINGER #531

Q5106-D10-8(4) AC365-D1032 (4)

AUX. D.C.

Q5106-D10-12 (8)

3/8 LETTERING BLACK DECAL ON SKIN SURFACE Ⓒ

*AC REG. ECLIPSE REGULATOR #D-106696 1
*AC. REG. ECLIPSE REGULATOR #D-106421 1

AC365-D1032
Q5106 D10-16
Q8106 D8-16
Q5106-D10-12
Q5106-D10-8

△	PBY-5	28E5302	L
LIST SHEET No.	MODEL	NEXT ASSY.	DES.

REQUIREMENTS PER AIRPLANE

REPLACES	8.30 GRAD. WT.
REPLACED BY	ASY. WT.

Lists to Engineering Section Dimensions
Date 9-12-42
Scale 12"=1'0"
STAMP PART NUMBER WHERE SHOWN

PART No	STOCK	MATERIAL	SPEC.	LH REQ.	RH REQ.	LH REQ.	RH REQ.	LH REQ.	RH REQ.	LH REQ.	RH REQ.
PARTS LIST PER ASSY.				-0	-2	-3	-4	-5			
-6											
28E5299-R											
28E5299-L											
28E5290-7											
28E5289											
28E5288											

A.C. NAVY — HEAT TREAT — FINISH — 9/12/42 — DRAFT — CHECK — STRUCT — MAT — APPROVED — DATE

NAME INSTALL.-ELEC.-AUX. POWER UNIT REGULATORS

CONSOLIDATED AIRCRAFT CORP. San Diego, Calif.

OPP. HAND — DWG. G — SIZE — 28E5287

R 9-19-42

LET	ALTERATION	DATE	BY

LET	ALTERATION	DATE	BY
A	ADDED NAF1150-8AC-45 & AN3108-20-45(1). INT LTR 1.33	7-19-43	[illegible]

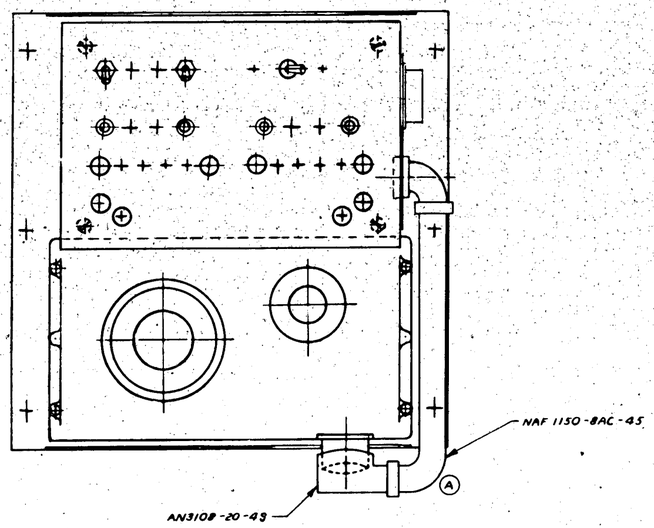

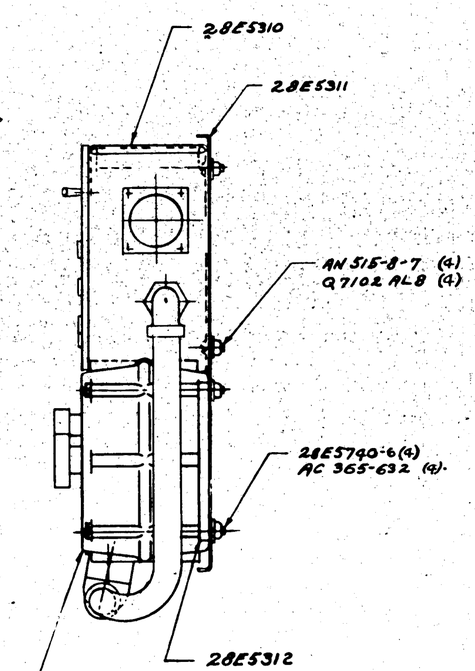

B.O. *399545
MARK-2-1 INTERVALOMETER
*GOVT. FURN.

C.91876 *91 ON

DASH NO.	MODEL	NEXT ASSY	REQ'D
-0	PBY-5	28E5314	1

REQUIREMENTS PER AIRPLANE
REPLACES
REPLACED BY

STAMP PART NUMBER WHERE SHOWN

DRAWN 6"=1'-0"

PART NO	STOCK	MATERIAL	SPEC	LH REQ -0	RH REQ -2	LH REQ -3	RH REQ -4	LH REQ -5	RH REQ
* MK-2-1 INTERVALOMETER (MALLORY) GOVT FURN									
Q7102 AL8								4	
AN315-8-7								4	
AC365-632								4	
NAF1150-8AC-45								1	
AN3108-20-45								1	
28E5740-6								6	
28E5312								1	
28E5311								1	
28E5310								1	

PARTS LIST PER ASSY.

A C
NAVY NONE
HEAT TREAT
NONE
FINISH

DRAWN 9-14-42
CHECK
STRUCT
MAT
APPROV
ENG

NAME ASSY-ELEC-MK-2-1 INTERVALOMETER

OPP. HAND

CONSOLIDATED AIRCRAFT CORP. San Diego, Calif.

SIZE C
DWG 28E5306

R

LET	ALTERATION	DATE	BY

LET	ALTERATION	DATE	BY
A	REPLACED SWITCHES AN3015(8) WAS C.H.11225(8) ADDED AN515-8-8, AN340-8 AN935-8 TO BILL OF FACE OF DRW6.	10-29-42	GAL
B	IN B/M, 28E5304 (12) WAS #515 TIP PLUGS (20) NO WT. CHG.	11-4-42	Ruth

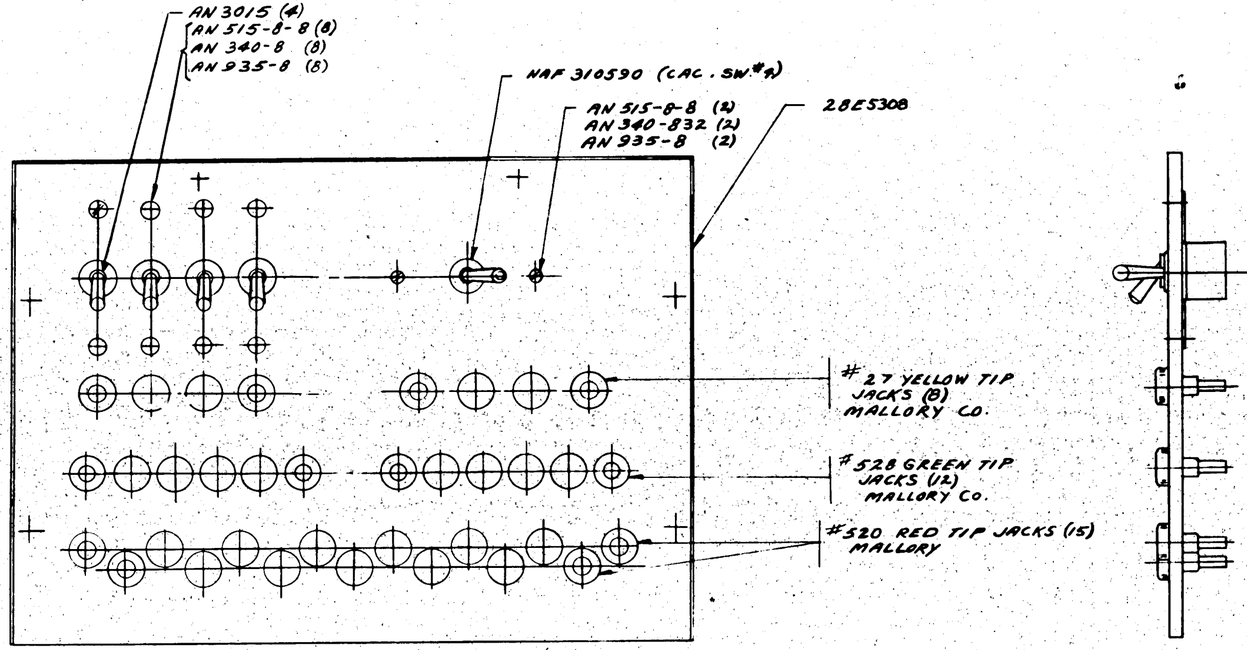

PART No	STOCK	MATERIAL	SPEC.	LR REQ -0	RH REQ -2	LH REQ -3	RH REQ -4	LH REQ -5	RH REQ -6
28E5304									13
#528 GREEN JACKS) #527 YELLOW JACKS) #520 RED JACKS)		MALLORY CO. L.A. CAL.							12 8 15
NAF310590 (CAC. SW. #4)			C1B						1
AN3015									4
AN 935-8									10
AN 515-8-8									10
AN 340-832									10
28E5308									1

PARTS LIST PER ASSY.

CWBTG 5/6 ON

ASSY DASH NO.	MODEL	NEXT ASSY	QUAN
-0	PBY-5	28E5310	1

REQUIREMENTS PER AIRPLANE

REPLACED BY — QUAN QTY — ASY QTY

LIMIT ON DIMENSIONS UNLESS OTHERWISE SPECIFIED: ± 1/32 — SCALE 12"=1'-0"

STAMP PART NUMBER WHERE SHOWN

A.C.

NAVY	NONE	NONE	9-4-42	GALTIA	Kennedy				
	HEAT TREAT	FINISH		DRAFT	CHECK	STRUCT	MAT	APPROV	ENG

NAME PANEL ASSY-ELEC-MK-2-1 INTERVALOMETER — OPP. HAND

CONSOLIDATED AIRCRAFT CORP. SAN DIEGO, CALIF.

DWG. G — SIZE — 28E5307

R

LET	ALTERATION	DATE	BY
A	INCREASED HEIGHT OF PANEL TO 6 3/8 WAS 6. ADDED 2 HOLES 3/16 DIA. 1/2 D. DIMS. WERE 11/16. 7/16 WAS 5/16. 1 1/32 WAS 1".		
B	IN B/M ON FACE OF DWG CREATED -7 - B TO REPLACE -0. REMOVED -0 3/16 X 6 3/8 X 9 PHENOLIC 17PS FROM B/M ADDED FOR -7. TO CHAMFER NOTE & MAT'L NOTE. 7/32 WAS ORIG. NOTE.		
C	5/16 DIMS (4 PL.) WAS 7/16.		
D	ADDED V8 DIMS (2 PL.) DIMS: 3/4 (4) 13/32 (2) 5/8 (4) WAS (1) 3/4 (2) 13/32 (4) 5/8 (4) WERE 1 1/8 (2) 7/8 (2) 1/2 (10) & 1/4 (2) RECPT. NO WT CHG.		
E	ADDED V8 DIMENSIONS TO		
F	LOCATE 5/16 D-8 HOLES. 1/4 DIA. (15, 12 & 8 HOLES) WAS 5/16 DIA. WT. CHANGED.		

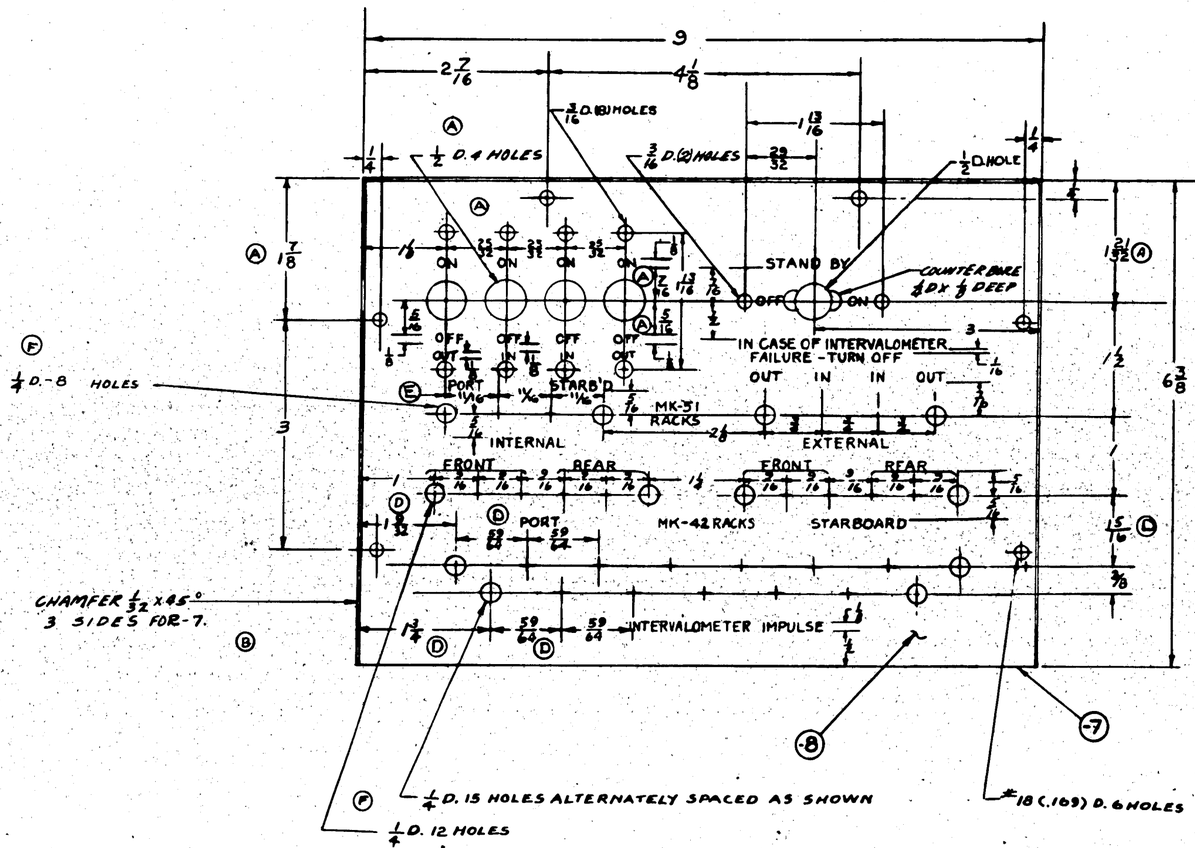

(B) PART MAY BE:
(1) DECALCOMANIA WITH PHENOLIC BASE.
-7 TO BE 3/16 X 6 3/8 X 9 PHENOLIC.
-8 TO BE DECALCOMANIA. LETTERING FOR -8 TO BE 1/8 HIGH PALE GREEN FLUORESCENT PER SPEC. 14102. BACKGROUND TO BE DULL BLACK. HOLES TO BE PLACED AFTER -8 HAS BEEN APPLIED TO -7.
(2) ALTERNATE PART MAY BE PHENOLIC, LETTERING, TO BE 1/8" HIGH RECESSED & FILLED WITH PALE GREEN FLUORESCENT LACQUER (NO. 10 U.S. RADIUM CO. OR EQUIV.) BACKGROUND TO BE DULL BLACK. (MATERIAL TO BE 3/16 X 6 3/8 X 9 PHENOLIC, SPEC. 17PS F.B.M.)

C. NO. (S) 4844
C 91876 4/21/6 ON

ASSY DASH NO.	MODEL	NEXT ASSY.	QTY.
-0	PBY-5A	28E5307	
-0	PBY-5	28E5307	

REQUIREMENTS PER AIRPLANE
REPLACED: 50 DATE QTY
REPLACED BY: ASST. QTY
LAST USE DISCONTINUED: DATE
SCALE: 1/2 12" = 1'-0"
STAMP PART NUMBER WHERE SHOWN

PART NO	STOCK	MATERIAL	SPEC.	LH BM REQ	LH BM REQ	LH BM REQ	LH BM REQ	LH BM REQ
				PARTS LIST PER ASSY.				
-8	DECALCOMANIA	PHENOLIC	CONN. 17PS FAM 1		-2	-3	-4	
-7	3/16 X 6 3/8 X 9							

A C
NAVY NONE
HEAT TREAT
NOTED
FINISH
9-8-43 DRAFT
MILLER CHECK
ENGR. APPROV.
PROD. CONTROL
PLAN
ENGR. APPROV.

NAME PANEL-ELEC-MK-2-1 INTERVALOMETER
CONSOLIDATED AIRCRAFT CORP. by F. SAN DIEGO, CALIF.
OPP. HAND
SIZE G
28E5308

R

LET	ALTERATION	DATE	BY
A	CHGED DIM. - 6 7/8 WAS 6	4-7-42	GALVIN
	1 7/8 WAS 1 7/8 2 3/8 WAS 1 1/4		
B	ADDED DIM. "H" & OMITTED DIM. "G" NO MT. CHG.	4-19-42	GALVIN

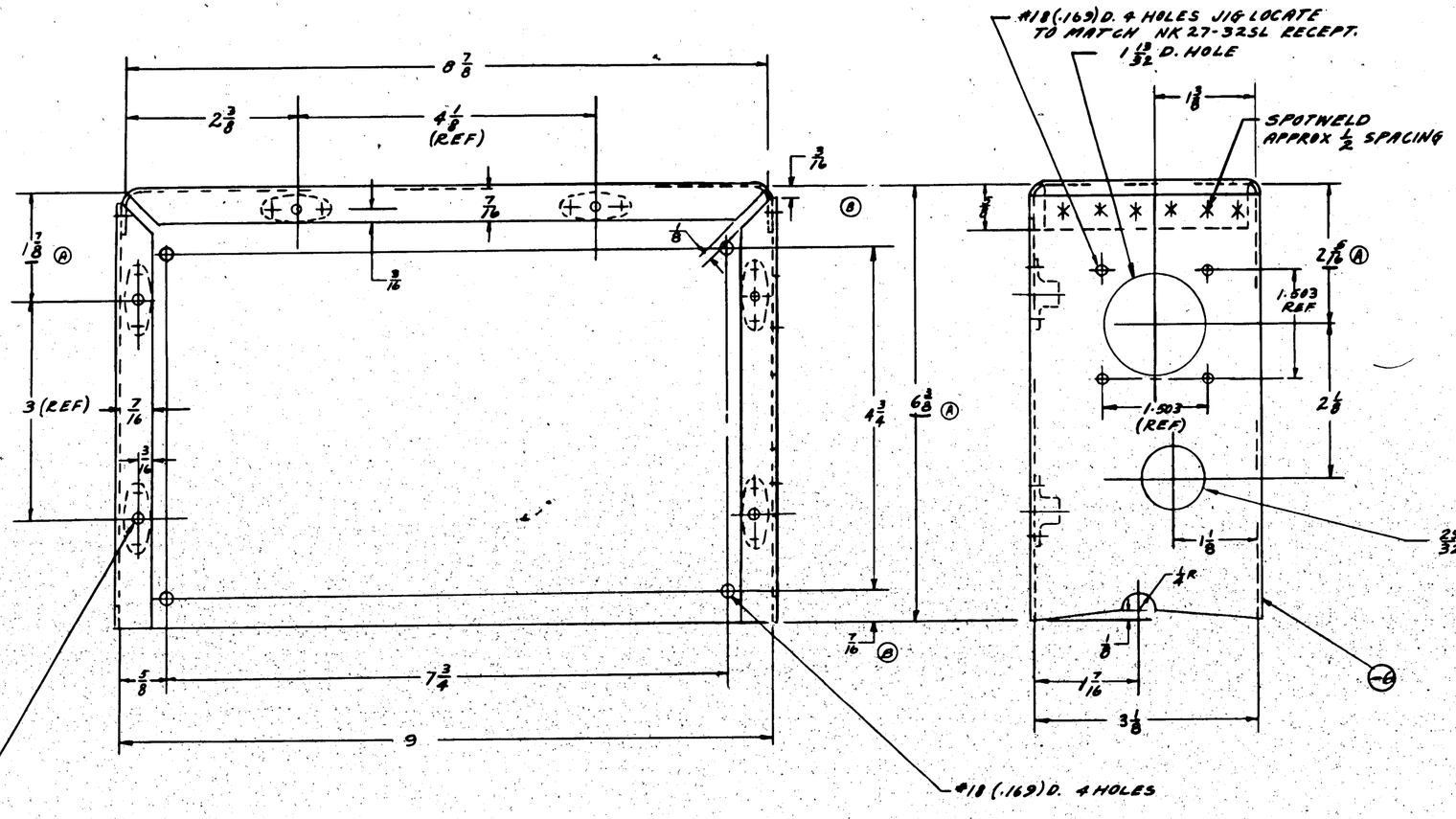

C91876 #91 ON

AN425AD3
AC366-F832

Q	PBY-6	28E5310	1
USED ON NEXT ASSY	MODEL	NEXT ASSY	QUAN.

REQUIREMENTS PER AIRPLANE

REPLACES .960 QUAN. PER

REPLACED BY ACT. QTY.

SCALE 12" = 1'-0"

STAMP PART NUMBER WHERE SHOWN

PART NO	STOCK	MATERIAL	SPEC.	LH REQ -0	RH REQ -2	LH REQ -3	RH REQ -4	LH REQ -5	RH REQ
-0	.064 X 11 X 16	24ST ALC	QQA 561	1					

PARTS LIST PER ASSY.

A C		9-9-42			
NAVY	EP-GP	GALVIN			
HEAT TREAT	FINISH	DRAFT	CHECK	STRUCT	MAT

NAME BOX-ELEC-MK-2-1 INTERVALOMETER

CONSOLIDATED AIRCRAFT CORP. San Diego, Calif.

OPP. HAND

DWG G DWG 28E5309

R

E.O. 53643

LET	ALTERATION	DATE	BY	LET	ALTERATION	DATE	BY
A	NAF 1149-8 WAS AN3062-8(1) WT. CHG. REQ.						
B	ADDED PBY5A NEXT ASSY. M.E.R. 164-2 28E5306(1)						

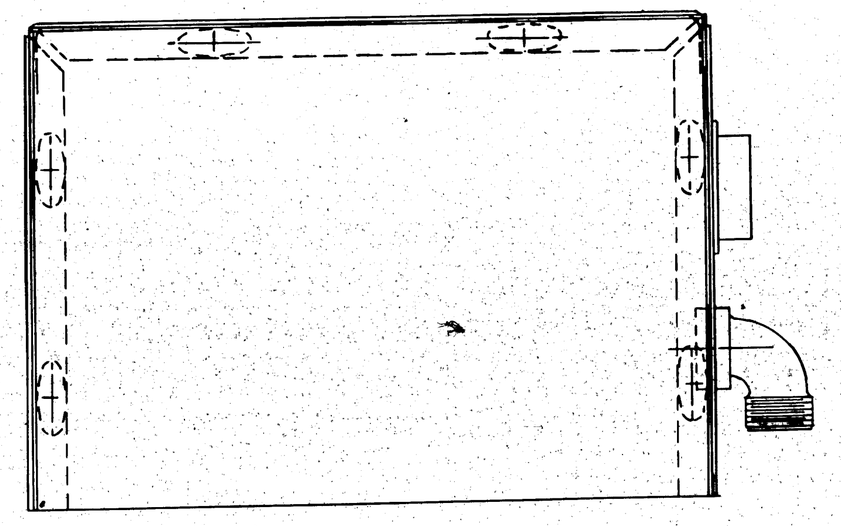

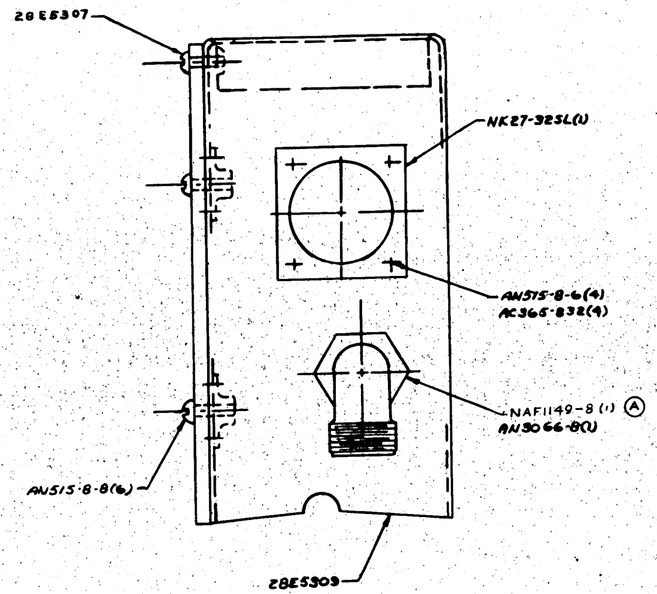

(A) NK27-32SL RECEPTACLE MAY BE PURCHASED FROM CANNON ELEC. DEVELOPMENT CO, LOS ANGELES, CALIF.

(B) MCR 164-2
C 91876 "91 ON

PART NO	STOCK	MATERIAL	SPEC	-0 REQ.	-2 REQ.	-3 REQ.	-4 REQ.	-5 REQ.
AN515B4-6				6				
AN515-8-8				4				
AC365-832				4				
NAF1149-8				1				
AN3066-8				1				
NK27-32SL	(A) RECEPTACLE			1				
28E5300				1				
28E5307				1				

PARTS LIST PER ASSY.

DASH NO.	MODEL	NEXT ASSY	REQ.
	PBY-5A	28E5306	1
	PBY-5	28E5306	1

REQUIREMENTS PER AIRPLANE

REPLACES
REPLACED BY

SCALE: 12" = 1'0"
1/32

AC
NAVY NONE
HEATTREAT NONE FINISH

WALLACE 9-15-42

DRAFT CHECK ENGR MFG'R MAT'L APPROVED ENG.

NAME ASSY-ELEC-MK-2-1
INTERVALOMETER BOX

CONSOLIDATED AIRCRAFT CORP. SAN DIEGO, CALIF.

OPP. HAND

DWG. SIZE G | 28E5310

R 9-20-42

LET	ALTERATION	DATE	BY

LET	ALTERATION	DATE	BY
A	CHG. $\frac{3}{16}$ WAS 1, & $\frac{1}{8}$ WAS $\frac{3}{16}$ (SH. NO. 1)	1-8-43	[illegible]
B	REMOVE FLANGE AT TOP OF VIEW (W.P.N.S. 1424)	1-8-43	[illegible]

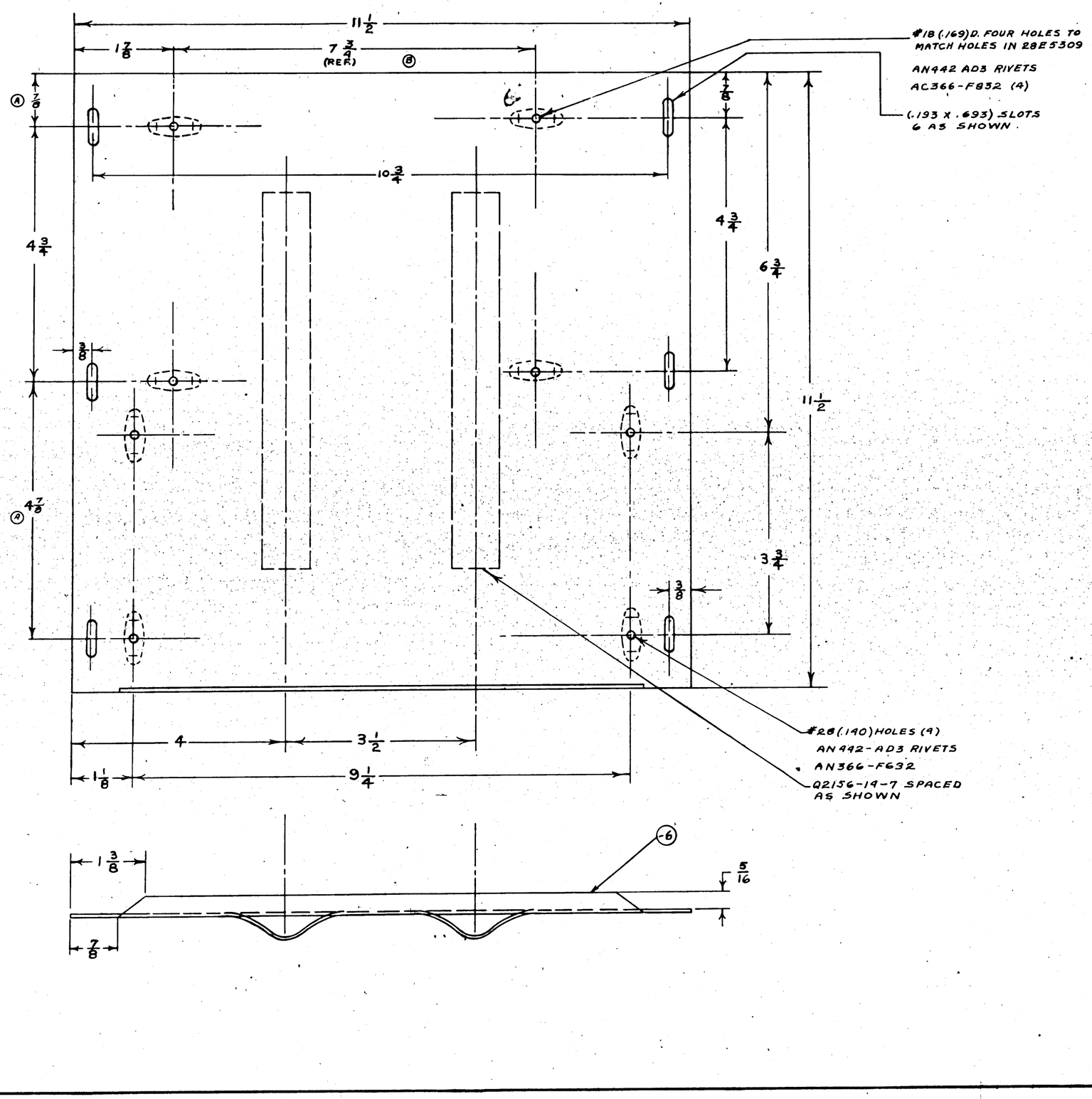

C.91876 #91 & ON

PART No	STOCK	MATERIAL	SPEC.	LH REQ	RH REQ	LH REQ	RH REQ	LH REQ	RH REQ	LH REQ	RH REQ
PARTS LIST PER ASSY.				-0	-2	-3	-4	-5			
-6	.064 x 12 x 12	ALL SHEET	47A 8 CONDT	1							
AN442-AD3											
AC366-F832				4							
AC366-F832				4							

ASSY DASH No.	MODEL	NEXT ASSY	REQ.
	PBY-5	28E5306	1

REQUIREMENTS PER AIRPLANE

DISPLACED	8136	DASH NO.
DISPLACED BY		ASSY. NO.
LAYOUT BY DRAWING No. OR ENGINEERING ORDER	1/32	SCALE 12" = 1'0"

STAMP PART NUMBER WHERE SHOWN

A C		JOHNSTN	MATERIAL	P.R.A. Nos. 2-23-43		
NAVY	Z-P-GP	9/15/42				
HEAT TREAT	FINISH	DRAFT	CHECK	STRUCT	MAT	APPROV. ENG.

NAME PLATE-ELEC.-MK-2-1 INTERVALOMETER

OPP. HAND

DWG G DWG 28E5311

CONSOLIDATED AIRCRAFT CORP. WF San Diego, Calif.

R 9.28.42

LET	ALTERATION	DATE	BY
A	IN-6, 17/32 DIA. HOLE (1) WAS 1 9/32 DIA.		
	IN-7, 17/32 DIA. HOLE (1) WAS 1 9/32 DIA.		
	IN-8, 5 9/32 DIA. HOLES (2) WAS 4 9/32 DIA.		
	WT. CHG. NEG.	5-16-43	[illegible]

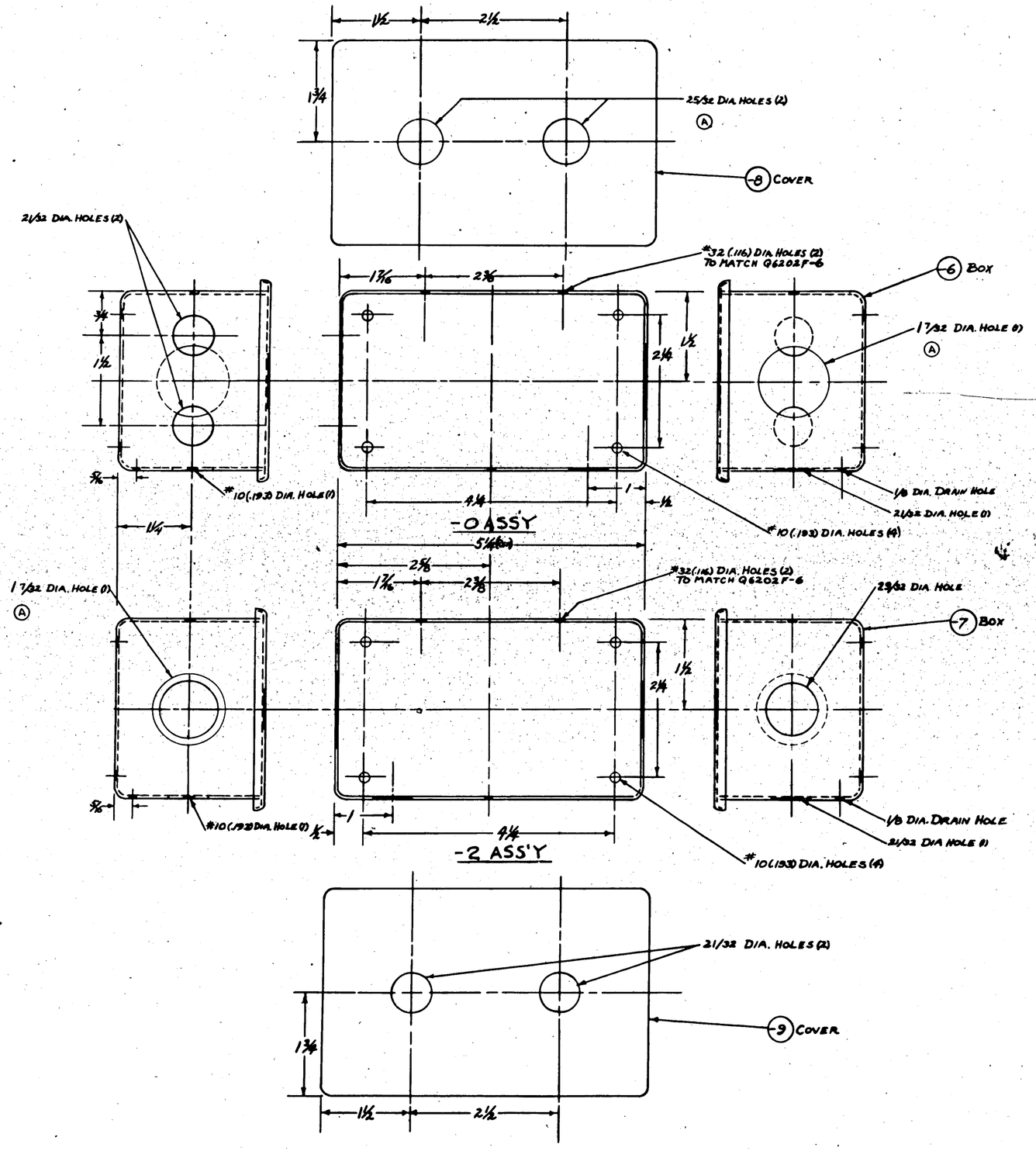

NOTES:

1. BOX & COVER MAY BE PURCHASED FROM MONARCH TOOL & INSTR. CO. SPECIFYING 1034R-216 BOX AND MT-CSD 1034 COVER OR FROM POULSEN & NARDON CO. SPECIFYING 1193-216N BOX AND 1193-JSD COVER.
2. BOX TO BE FURNISHED WITH TIGHT FITTING COVER, NON LOSEABLE STEEL SCREWS & DURAL WASHERS
3. REMOVE FINISH 3/32 RADIALLY AROUND HOLES
4. FINISH - P-INSIDE, P&P OUTSIDE.

CONT. NXS 13595
CONT. 91876 C.AC CN 24 *90 & *3466 ON

ASSY DASH NO.	MODEL	NEXT ASSY	REQ.
2	PBY-5A	23E5319	1
0	PBY-5A	28E5319	1
2	PBY-5	28E5319	1
0	PBY-5	28E5319	1

REQUIREMENTS PER AIRPLANE

REPLACED — REPLACED BY — USED ON SERIAL NOS. — SCALE 12"=1'0" — 1/32

STAMP PART NUMBER WHERE SHOWN

PART NO	STOCK	MATERIAL	SPEC	LH REQ.	RH REQ.	LH REQ.	RH REQ.	LH REQ.	RH REQ.	LH REQ.	RH REQ.
PARTS LIST PER ASSY.				-0	-2	-3	-4	-5			
-9	COVER										
-8	COVER										
-7	BOX	CAC #36									
-6	BOX										

A C — NAVY NONE — HEAT TREAT — FINISH — NOTED — DRAFT KING — CHECK — STRUCT — MAT — APPROVED — DWG

NAME: BOX - ELEC - WING LIGHT JUNCTION

CONSOLIDATED AIRCRAFT CORP. SAN DIEGO, CALIF.

OPP. HAND — DWG. G — DWG. 28E5321

R

LET	ALTERATION	DATE	BY	LET	ALTERATION	DATE	BY

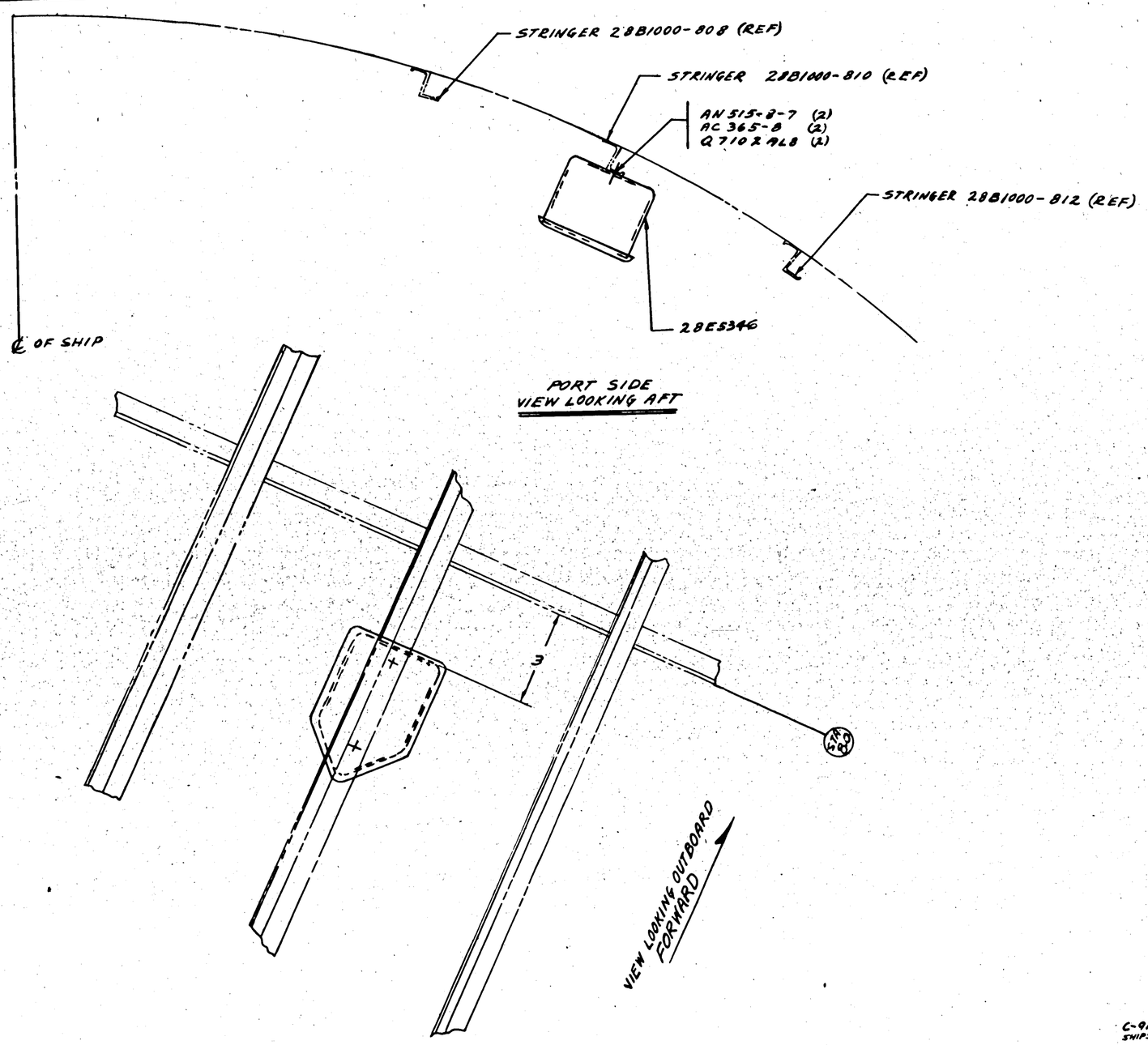

C-91876
SHIPS 90 & 261-ON

CHG # 23 (13)

PART No	STOCK	MATERIAL	SPEC	LH REQ -0	RH REQ -2	LH REQ -3	RH REQ -4	LH REQ -5	RH REQ
Q7102AL8					2				
AC365-8 AN515-8-7					2 2				
28E5346									

PARTS LIST PER ASSY.

ASSY. DASH NO.	MODEL	NEXT ASSY	DRG.
	PBY-5	28EM13	1

REQUIREMENTS PER AIRPLANE

REPLACES

REPLACED BY — CALC WT / ACT WT

SCALE: 12"=1'-0"

STAMP PART NUMBER WHERE SHOWN

AC
NAVY NONE — HEAT TREAT
NONE — FINISH

DRAFT 11-17-42 — CHECK — STRUCT — MAT — APPROV — ENG

NAME INSTALL.-ELEC-BLKHD. & JUNCTION BOX

CONSOLIDATED AIRCRAFT CORP. SAN DIEGO, CALIF.

OPP HAND

DRG. G SIZE

28E5347

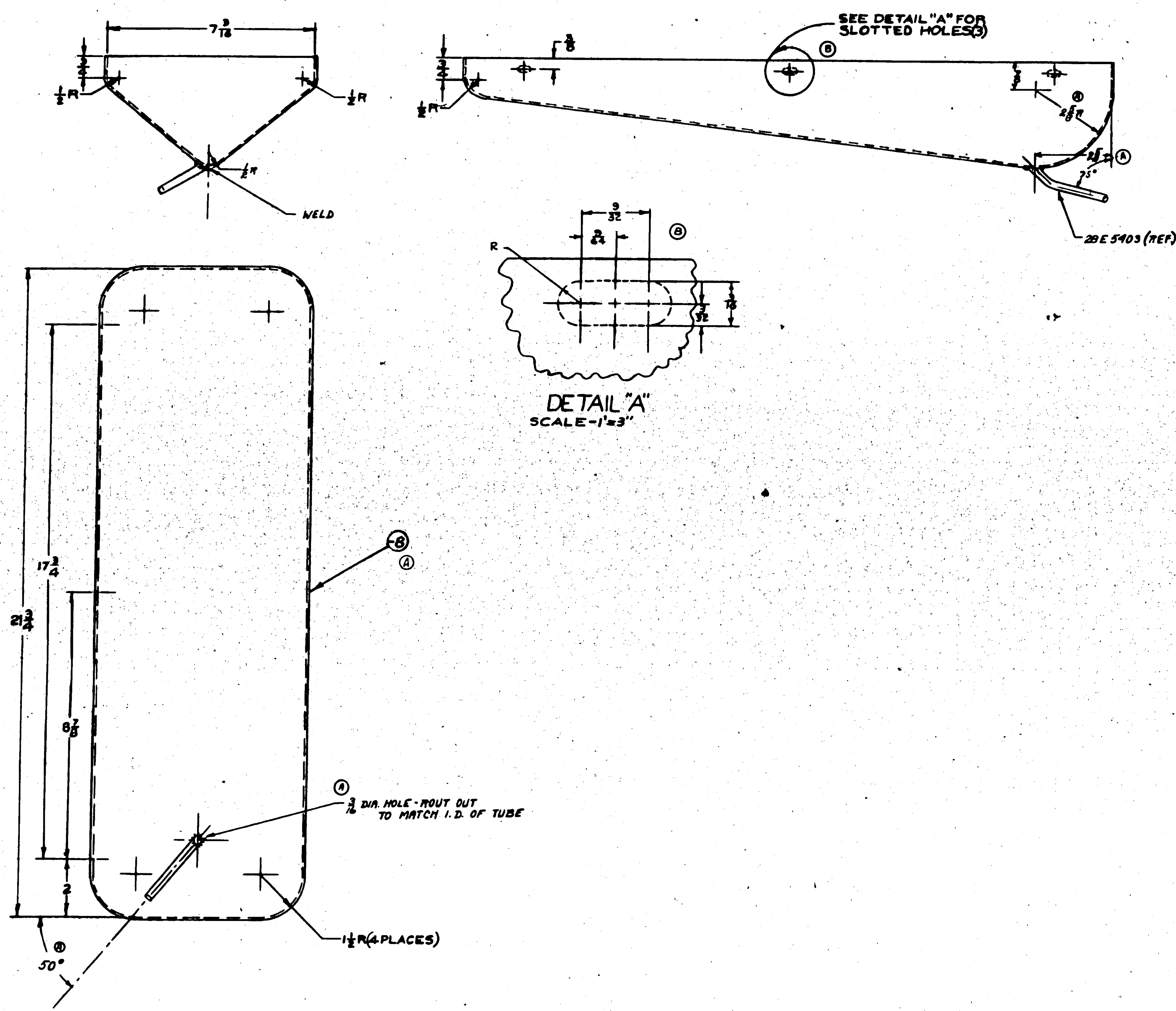

LET	ALTERATION	DATE	BY
A	ON FACE OF DWG. & IN 3/16 REPLACE -6 (1) WITH -8 (1). ON FACE OF DWG. 2 5/8 R (1 PLACE) WAS 1/2 R (2 PLACES); 2 5/8 DIM. WAS 3/4 DIM.; 50° WAS 45°; ADDED 7/8 & 75° DIM. & REMOVED 3 3/4 DIM.	3-11-43	[illegible]
B	IN UPPER R.H. VIEW DOTTED LINES OF SLOTS (3) WERE SOLID. DIM. 5/32 WAS 3/16 & 3/64 WAS 5/32 NO WT. CHG.	5-21-[illegible]	[illegible]

MCR #89-20

ASSY. DASH No.	MODEL	NEXT ASSY.	REQ.
	PBY-5	28E5397	1

REQUIREMENTS PER AIRPLANE

REPLACES — .924 CALC. WT.

REPLACED BY — ACT. WT.

LIMIT ON DIMENSIONS UNLESS OTHERWISE SPECIFIED: ±1/32 ± 1/2° — SCALE: 6"=1' & NOTED

STAMP PART NUMBER WHERE SHOWN

PART No	STOCK	MATERIAL	SPEC.	-0 REQ.	-2 REQ.	-3 REQ.	-4 REQ.	-5 REQ.
28E5403				1				
-8	.040 X 18 1/2 X 26 1/2	AL UM ALL.	47A11	1				

PARTS LIST PER ASSY.

AC							
NAVY	Z-P-GP	1-8-43					
HEAT TREAT	FINISH	DRAFT	CHECK	STRUCT	MAT	APPROV	ENG

NAME ASSY-ELEC-AFT OIL DRIP PAN-APU

OPP. HAND

DWG. SIZE G — 28E5399

CONSOLIDATED AIRCRAFT CORP. SAN DIEGO, CALIF.

R

V. Brown CHANGE (A)
APPROVED FOR TOOLING BY
P. Humphrey 1-25-43

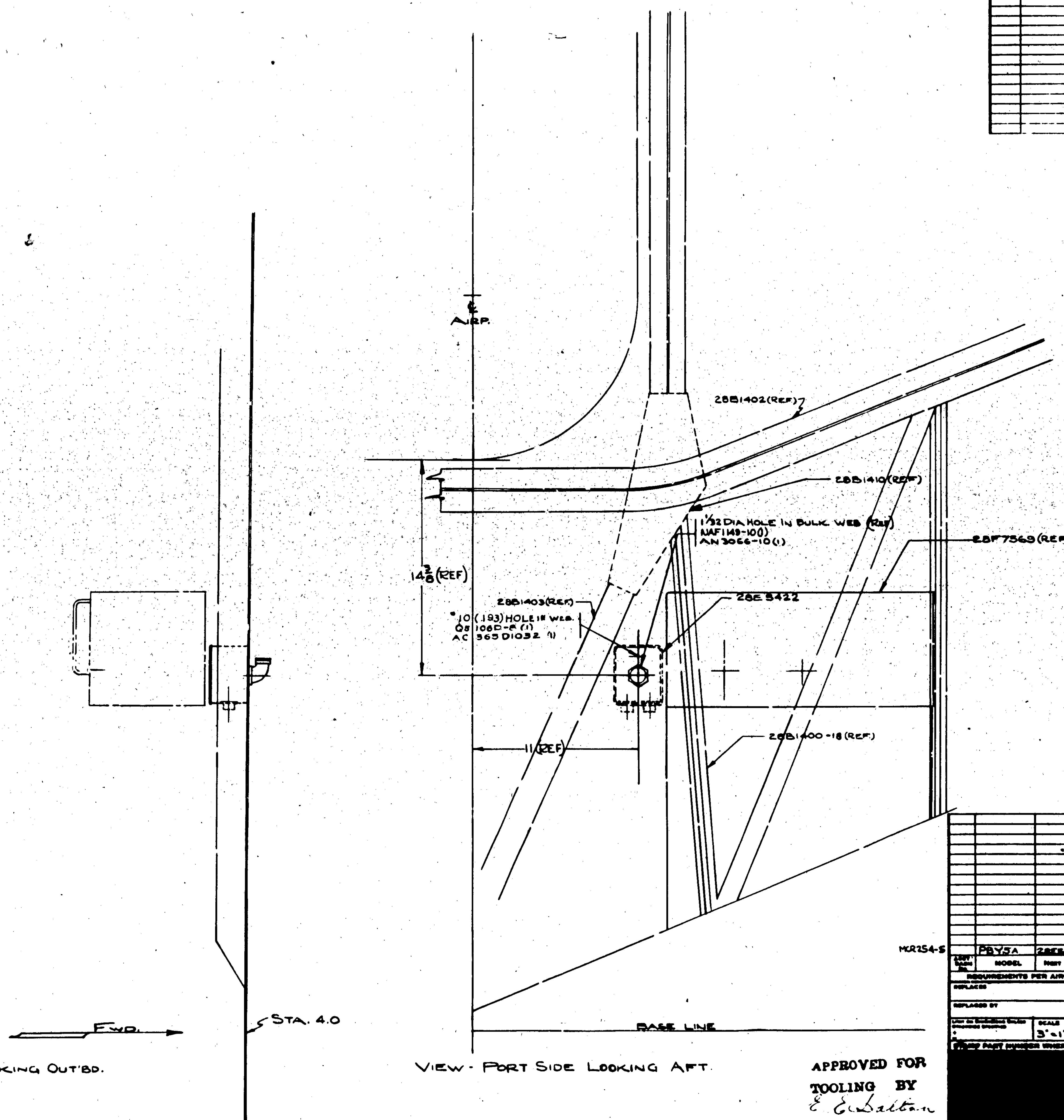

PORT SIDE LOOKING OUT'BD.

VIEW - PORT SIDE LOOKING AFT.

APPROVED FOR TOOLING BY
E. E. Dalton

LET	ALTERATION	DATE	BY	LET	ALTERATION	DATE	BY

MCR254-5

ASSY. DASH No.	MODEL	NEXT ASSY.	REQ.
	PBY5A	28E5663	1

REQUIREMENTS PER AIRPLANE

REPLACES	.666 DWG. WT.
REPLACED BY	ASSY. WT.

SCALE 3"=1'-0"

PART No	STOCK	MATERIAL	SPEC.	-0 REQ.	-2 REQ.	-3 REQ.	-4 REQ.	-5 REQ.
AC365D1032				1				
QS106D10-8				1				
NAF1149-10				1				
AN3066-10				1				
28E5422				1				

PARTS LIST PER ASSY.

AC								
NAVY NONE	NONE	3/10/43						
HEAT TREAT	FINISH	DRAFT	CHECK	STRUCT	MAT	APPROV	ENG.	

NAME INSTALL.-ELEC.-RADIO ALT. POWER JUNCTION BOX.

OPP. HAND

DWG. SIZE G 28E5421

CONSOLIDATED AIRCRAFT CORP. SAN DIEGO CALIF.

28E5421 R

LET	ALTERATION	DATE	BY	LET	ALTERATION	DATE	BY

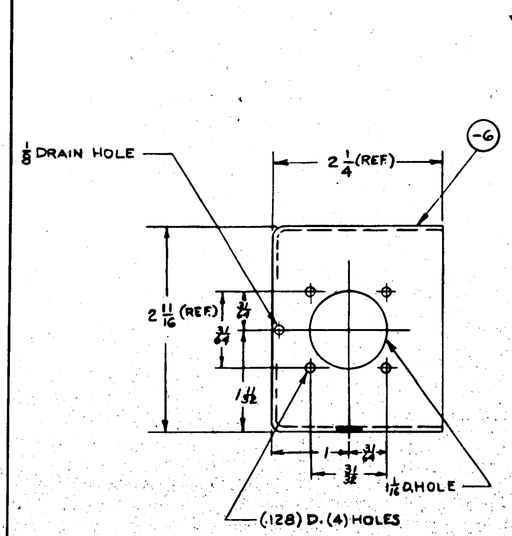

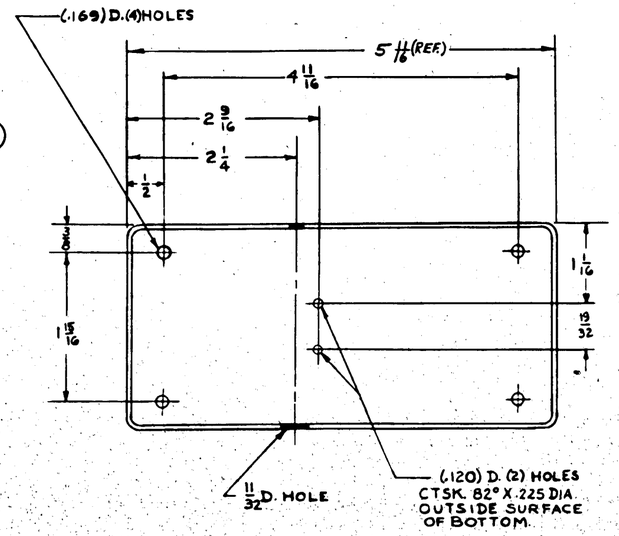

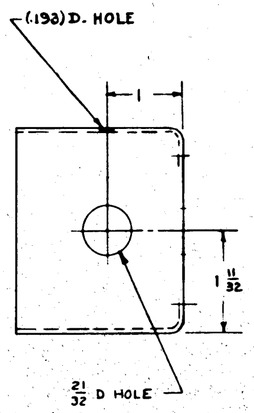

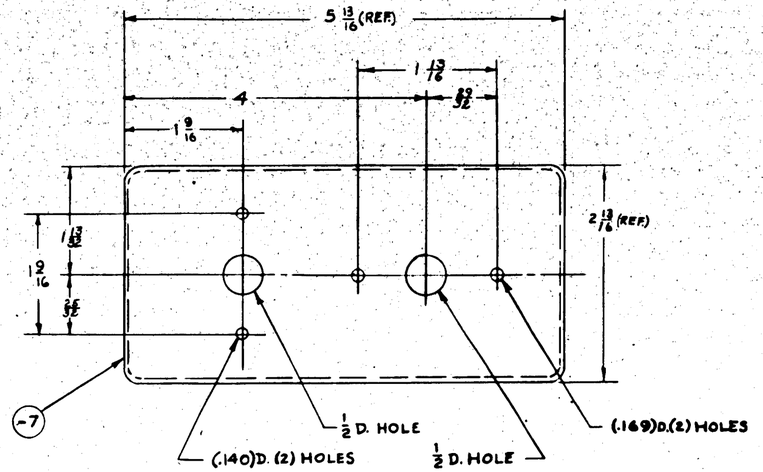

NOTES

1. BOX & COVER MAY BE PURCHASED FROM POULSEN-NARDON CO. SPECIFYING
   P-N 1225-208 BOX
   1225 COVER
   OR MONARCH TOOL & INSTR. CO.
   MT-1028-208 BOX
   CP-1028 COVER
2. BOX TO BE FURNISHED WITH TIGHT FITTING COVER & "NON-LOSEABLE" SCREWS & DURAL WASHERS
3. FINISH P-INSIDE & P-GP OUTSIDE
4. REMOVE FINISH 3/32 RADIALLY AROUND CONDUIT FITTING HOLES & 1/4 RADIALLY AROUND GROUND SCREW HOLE.

APPROVED FOR TOOLING BY Irene 7/21-43

MCR256 -2

ASSY G.D.M. NO.	MODEL	NEXT ASSY	QUAN
	PBY-5A	28E5426	2
	PBY-5	28E5426	2

REQUIREMENTS PER AIRPLANE

REPLACED 28E6352 — .37 CALC WT

REPLACED BY — ACT WT

LIMIT OF DIMENSIONAL VALUES UNLESS OTHERWISE SPECIFIED ± 1/32 — SCALE 12" = 1'-0"

STAMP PART NUMBER WHERE SHOWN

PART NO	STOCK	MATERIAL	SPEC	LH REQ.	RH REQ.	LH REQ.	RH REQ.	LH REQ.	RH REQ.	LH REQ.	RH REQ.
-7	COVER										
-6	BOX	C.A.C. "40-208N									
PARTS LIST PER ASSY.				-0		-2		-3		-4	-5

A C — NAVY NONE — HEAT TREAT

NOTED — FINISH

	DRAFT	CHECK	STRUCT	MAT	APPROV	ENG
	HLAVIN					
	7-7-43	7-13-43				

NAME BOX-ELEC-CAMERA SWITCH

OPP HAND

DWG G SIZE 28E5425

CONSOLIDATED AIRCRAFT CORP. SAN DIEGO CALIF

28E5425 R

LET	ALTERATION	DATE	BY	LET	ALTERATION	DATE	BY

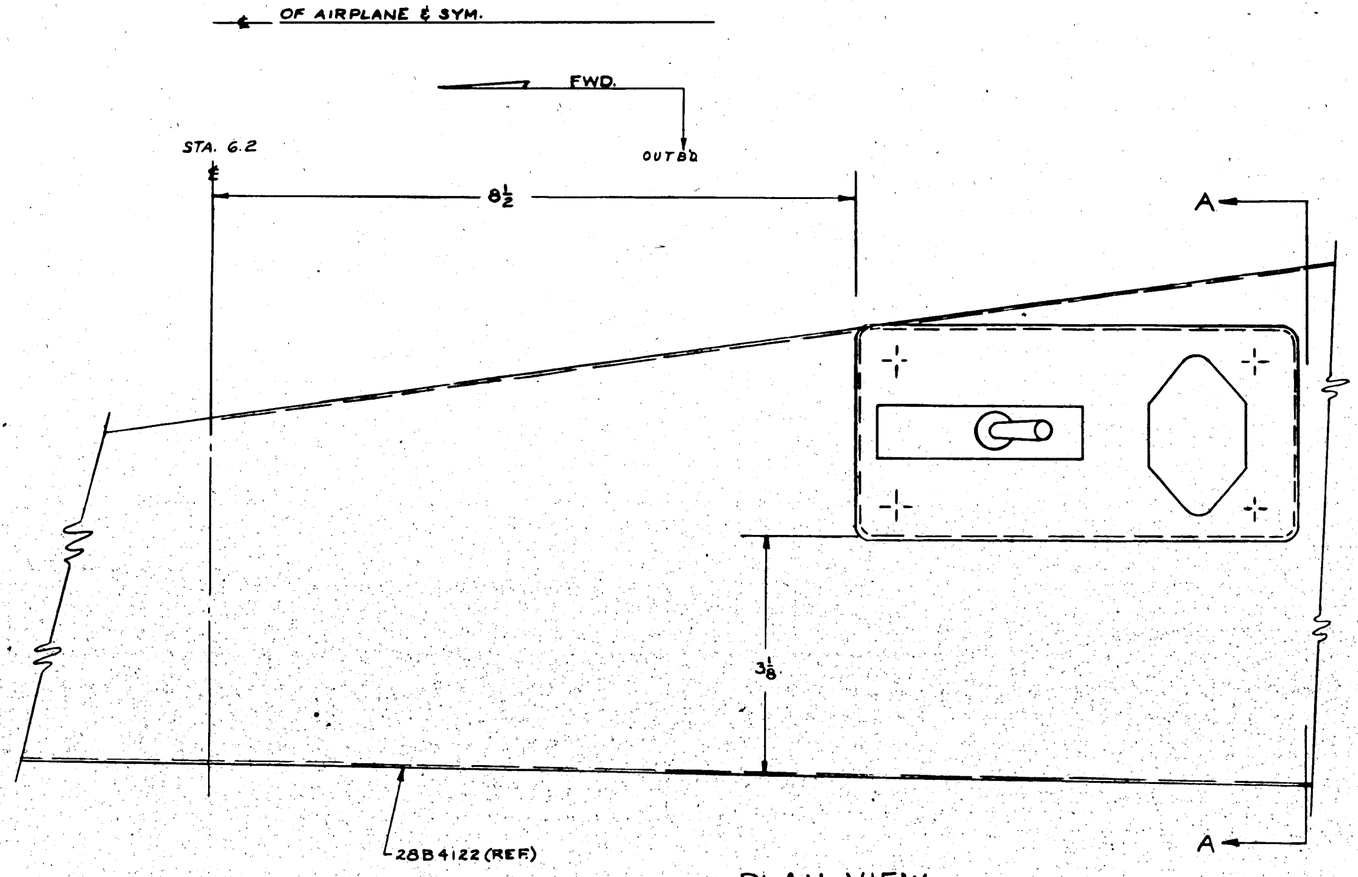

PLAN VIEW
PORT SIDE

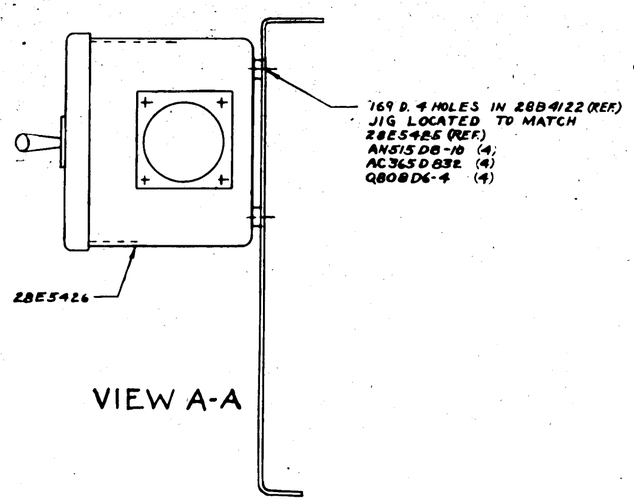

VIEW A-A

QR	PBY-5A	28E1013	1														
QR	PBY-5	28E1013	1														
QL	PBY-5A	28E1013	1	QBBD6-4				4	4								
QL	PBY-5	28E1013	1	AC365D832				4	4								
ASSY GA DWG NO	MODEL	NEXT ASSY	REQ	AN515D8-10				4	4								
REQUIREMENTS PER AIRPLANE				28E5426-10					1								
REPLACES 28E6354			.76 CALC QTY.	28E5426-12					1								
REPLACED BY			ACT QTY.														
PART No	STOCK	MATERIAL	SPEC					LH	RH	LH	RH	LH	RH	LH	RH	LH	RH
PARTS LIST PER ASSY.								1-0		REQ -2		REQ -3		REQ -4		REQ -5	

STAMP PART NUMBER WHERE SHOWN

SCALE 12"-1'-0"

APPROVED FOR TOOLING BY June 7/21-43

A C / NAVY — HEAT TREAT — FINISH

HLWIN 7-9-43 — DRAFT — CHECK — STRUCT — MAT — APPROV — ENG

NAME INST-ELEC-WAIST CAMERA SW BOX-STBD℄PORT

CONSOLIDATED AIRCRAFT CORP. SAN DIEGO, CALIF.

OPP HAND 28E5427-R

DWG G 28E5427

SIZE

28E5427

R

LET	ALTERATION	DATE	BY
A	REVISED & REDRAWN	8/1/60	Mm
B	AN737-6 (3) REPLACED BY AC 365-632		
	(3) ADD: B&B AN960-616L	1-12-61	Mm
C	IN PART ASSY. BLOCK 28E5645-0 WAS REVISED TO 28E5645-1	5-24-61	MICKEY
D	CANCELED PREVIOUS (REF) TOLERANCES (REF) ON FACE OF BRKT & IN NOTES	9-30-61	MMM
	ADDED SA-SAMN REQUIREMENTS		
E	LEAD-IN WIRE (4) 22/24 AWG-3 (MIL SPEC. AN3209-3) (2) AWG-4		
	(MFR CODE 81205)	4-27-62	
F	ADDED: 28E5811, AN520-1032R6 AC365-1032R6, AN960-416L6, AN515-6-7R6, AC565-0632R6, 28E5811-R, 28L5026-19 (REF) 28E5604-1 (REF) 28E5604-2 (REF) 28E5645-1 (REF) 28E5645-2 (REF) AC608-3-9 (2), AN735-2035-10 MS20615-8	8/16/62	LARRY
G	AC 365-1032 (2) WAS (4). ADDED AC364-1032 (2)		

LET	ALTERATION	DATE	BY
H	IN B.M. REPLACED 28E5645 WITH 28E5645-1, & 28E5645-2		
	NO WT CHG.	9-25-62	
J	ADDED 28E5869 TO PACK IN B.M. FOR M.C.R. #2284 ON. LIMITED 28E6255 FROM ITS M.C.R. #228. WT CHG. NOT.	11/16/62	Mm

P&W-SA E.O. 36205
28-SANC. 0.A-10

E.O. 55247

E.O. 13991-B

NOTES:-

(F)

2. INSTALL 28E5645 ACTUATOR ASSY ON 28L5042 (REF) LATCHPLATE WITH LATCHPLATE BOLTS AS SHOWN.
WITH 28L5043 (REF) LATCH IN FULLY CLOSED POSITION, ADJUST 28E5621-6 (REF) BOLT SO THAT STOP ON 28E5645-6 (REF) IS 15° FROM FLANGE ON 28E5645-7 (REF) BRKT.
ADJUST 28E5611 SO THAT OVERTRAVEL OF SWITCH PLUNGER IS NOT MORE THAN 1/32.

(D) (F)

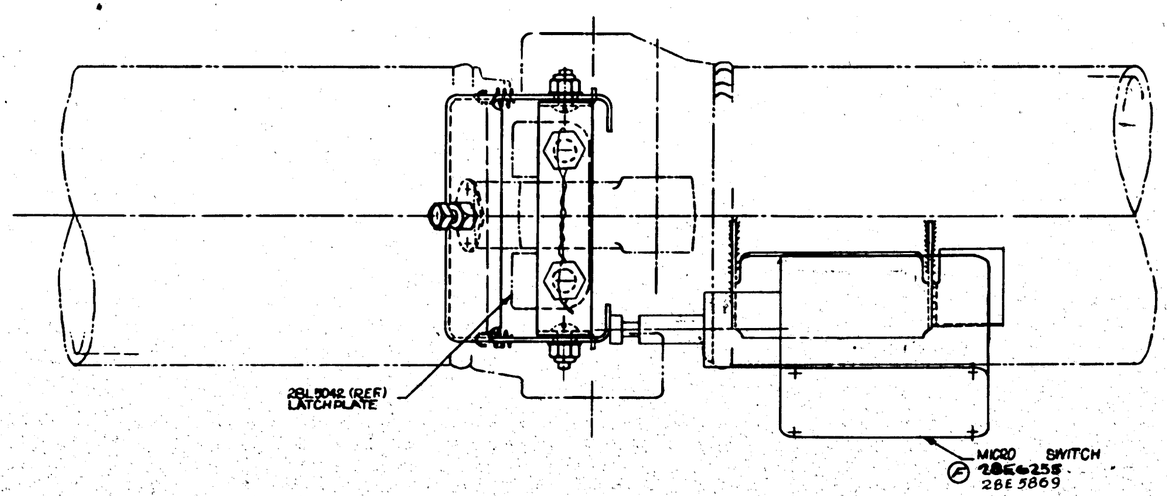

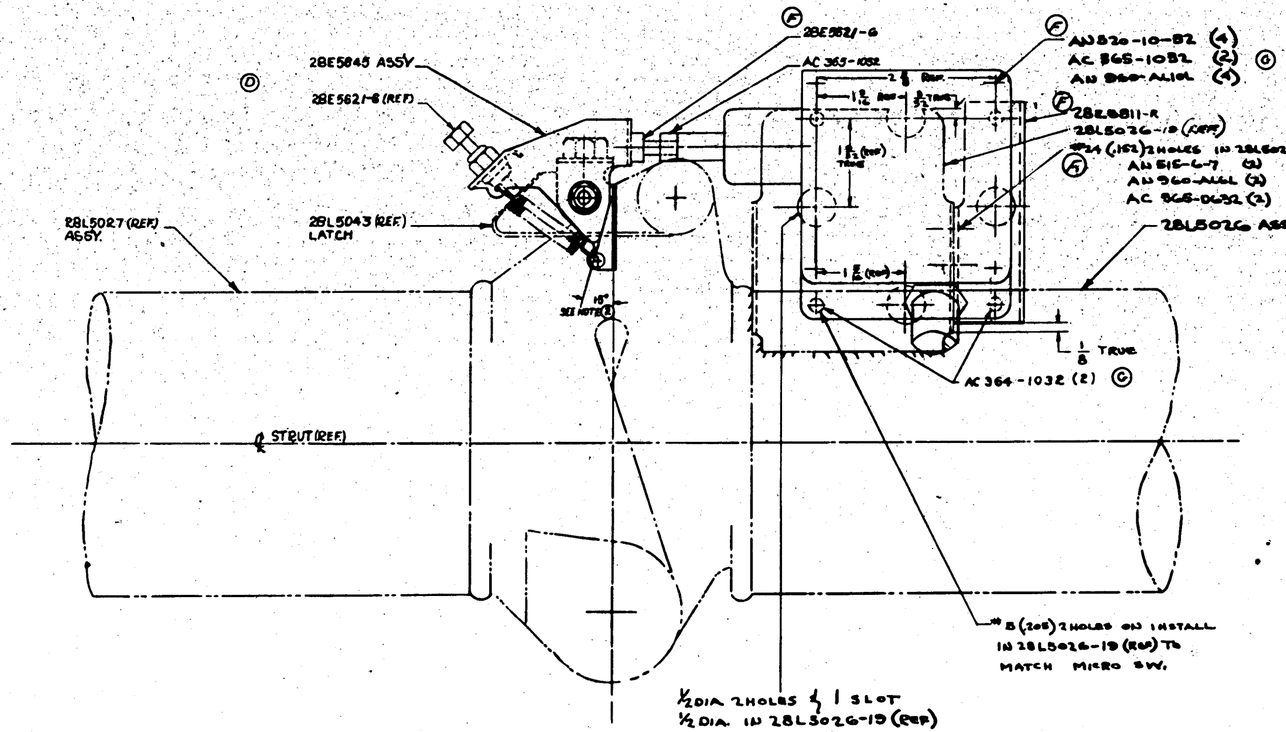
28E5645 ASSY
28E5621-6 (REF)
28L5027 (REF) ASSY.
28L5043 (REF) LATCH
(F) 28E5621-6
AC 365-1032
(F) AN520-10-32 (4)
AC 565-1032 (2) (D)
AN 960-416L (3)
(F) 28E5811-R
28L5026-19 (REF)
#24 (.152) 2 HOLES IN 28L5026-19 (REF) ON INSTALL.
AN 515-6-7 (2)
AN 960-416L (2)
AC 565-0632 (2)
28L5026 ASSY (REF)
15° SEE NOTE (2)
1/8 TRUE
AC 364-1032 (2) (C)
℄ STRUT (REF)
#8 B (.208) 2 HOLES ON INSTALL IN 28L5026-19 (REF) TO MATCH MICRO SW.
1/2 DIA 2 HOLES & 1 SLOT
1/2 DIA IN 28L5026-19 (REF) ON INSTALL TO CLEAR BOLT HEADS ON MICRO SW.

PART No	STOCK	MATERIAL	SPEC.	LH REQ.	RH REQ.	LH REQ.	RH REQ.	LH REQ.	RH REQ.
PARTS LIST PER ASSY.				-0	-2	-3	-4	-8	
AC364-1032						2	2		
AC565-0632						1	1		
AN960-416L						3	3		
AN515-6-7						1	1		
AC365-1032				2	2				
AN960-416L				4	4				
AN520-10-32				4	4				
-0R 28-SAMN	28E5645		1						
-0L 28-SAMN	28E5645		1						
28E5645-1						1			
28E5645-2							1		
28E6255 MICROSWITCH (1 TO M.C.R. # 228)						1	1		
28L5043-L									
-0R 28-SAMC	28E5645		1						
-0L 28-SAMC	28E5645		1						
28E5621-6						1	1		
-0R P&W-SA	28E5645		1						
-0L P&W-SA	28E5645		1						
28E5811R						1	1		
28E5869 (M.C.R. # 228 ON)						1	1		

LEAD DRAWING No.	MODEL	NEXT ASSY	QTY.
REQUIREMENTS PER AIRPLANE			
REPLACES 28E5604 DATED 10/26/60			3/1
REPLACED BY			ACT. QTY.
SCALE 12"=1'-0"			

STAMP PART NUMBER WHERE SHOWN

AC				Mm A			
NAVY NONE	NOTED ON DETAILS	12/1/60	11-16-61			1-8-62	
HEAT TREAT	FINISH	DRAFT	CHECK	STRUCT	STAT	APPROV	E-G

NAME INSTAL-ELEC-LATCH SW.-STRUT-MAIN L'D'G. GEAR

CONSOLIDATED AIRCRAFT CORP. SAN DIEGO, CALIF.

COPY NAME 28E5604-2

DWG. NO. G 28E5604

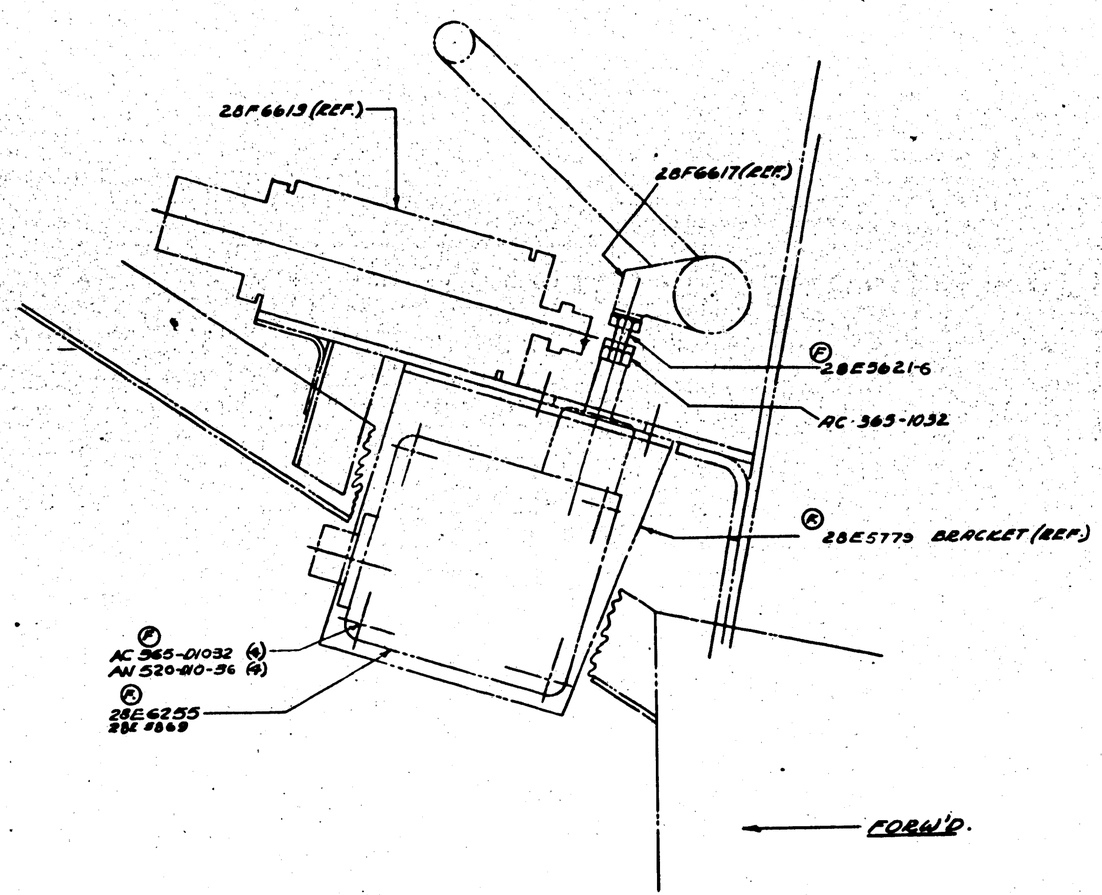

STA. #1.0

ADJUST 28E5621 BOLT SO THAT #28F6617 BRKT. (REF.) ACTUATES SWITCH WITH NOT MORE THAN 1/32 OVERTRAVEL WHEN DOORS ARE COMPLETELY LATCHED.

28E6255 28E5869	SWITCH ASSEM. (ITO MCR #229) M.C.R. #228 & ON			
0	28F6619	AN520-DHC-36	4	
0	28F6617	AC365-021 AC365-01032	4	
0	28F6616		1	
LTR. SYM.	MODEL	NEXT ASSY	QUAN.	
REQUIREMENTS FOR AIRPLANE (S)		28E5621-6	1	
USED ON 28E5222 & Subs			31	
DELIVERED BY			ASY. QTY.	
CHG. IN DRAWING NUMBER Previous Release		SCALE		
+ 102		12"=1'-0"		
STOCK PART NUMBER WHERE SHOWN				

PART NO.	STOCK	MATERIAL	SPEC	LH REQ.	RH REQ.	LH REQ.	RH REQ.	LH REQ.	RH REQ.
PARTS LIST PER ASSY.				-0	-2	-3	-4	-5	

A.C. NAVY None. HEAT TREAT. Metals and Dielec 461 FINISH

DRAWN	CHECKED	STRUCT	MAT	APPROVED	DATE
DRAFT					

NAME ASSY. & INSTL'N. SWITCH-ELEC.-NOSE WH'L. DOOR LATCH.

CONSOLIDATED AIRCRAFT CORP. San Diego, Calif.

SIZE G — 28E5622

LET	DESCRIPTION	REVISED	BY	APP'D
A	[illegible]	[illegible]	[illegible]	[illegible]
B	[illegible]	[illegible]	[illegible]	[illegible]
C	[illegible]	[illegible]	[illegible]	[illegible]
D	CREATED-2 ASSY'S AND -3 ASS'Y CAPT'D BY C.R. 28E5632-2 REPLACES 28E5632, ON FIG. 3 IN B/M. WT. CHG. REQ.	6-7-[illegible]	[illegible]	[illegible]
E	ADDED 28L5083 TO PART LIST PER MCR [illegible] ON 1 UNIT ONLY 28L0339, WT. CHG. REQ.	[illegible]	[illegible]	[illegible]

EQ. A 394-10

C.R. 37335

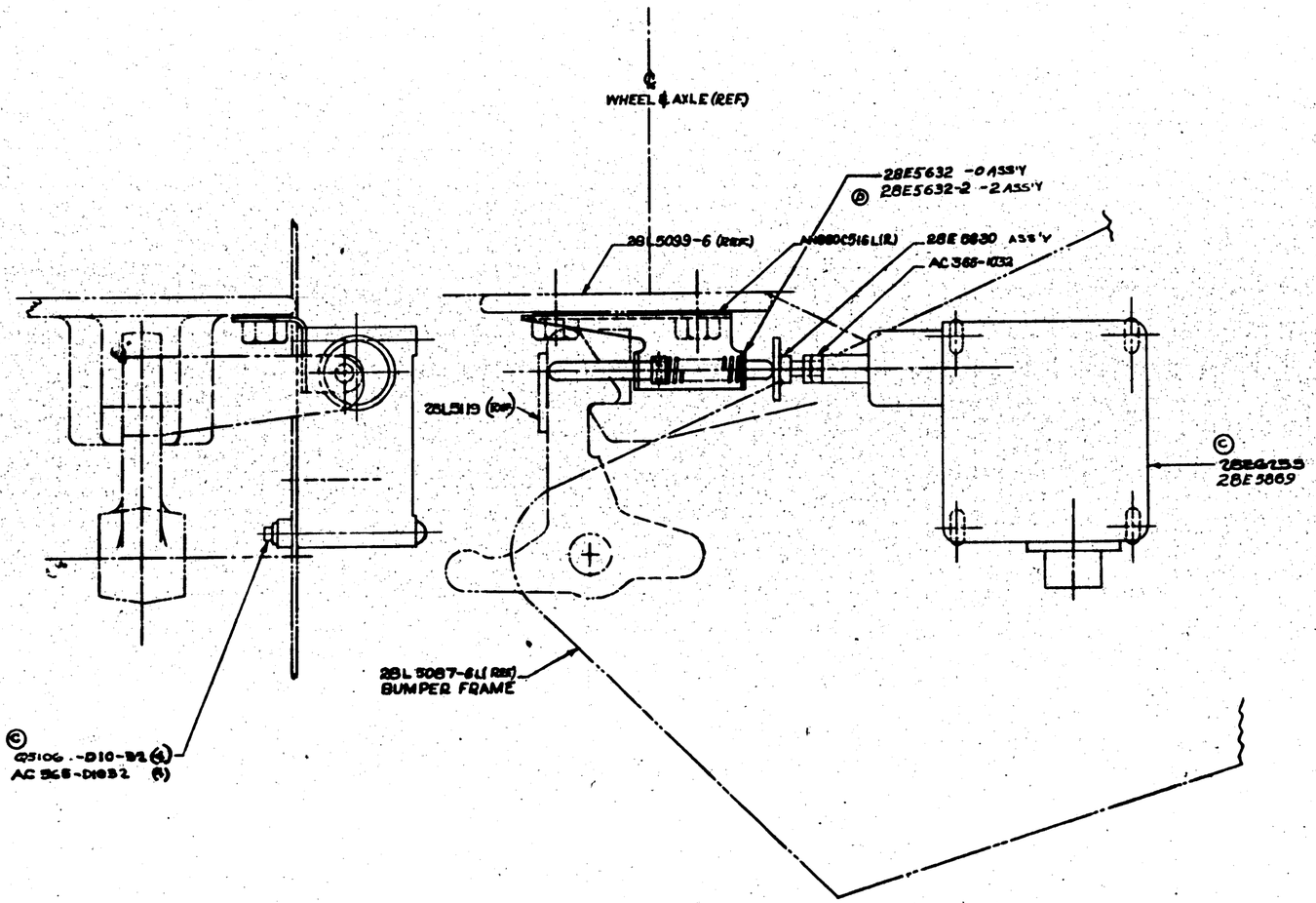

NOTE:
WITH WHEEL UP & 28L5119 LATCH COMPLETELY CLOSED ADJUST 28E 5630 BOLT SO THAT SWITCH IS ACTUATED & OVERTRAVEL DOES NOT EXCEED [illegible]

PART NO.	STOCK	MATERIAL	SPEC.	-0	-2	-3	-4

PARTS LIST PER ASSY.

ITEM NO.	MODEL	PART ASSY.	REQ.
-2	FBV-5A	[illegible]	[illegible]
-0	28-5AM5	[illegible]	[illegible]
-0	28-5AMC	[illegible]	[illegible]
-0	FBV-5A	[illegible]	[illegible]

REQUIREMENTS PER AIRPLANE

REPLACED

REPLACED BY

ASS'Y

SCALE 12"=1'-0"

28E 5869 (NCR # 228 (QK))

[illegible] SWITCH ASS'Y (TO NCR # 228)

28E5632-2

28E 6830 ASS'Y

c "ADDED 444

-2 FBV-5A

-0 28-5AM5

-0 28-5AMC

-0 FBV-5A

a "FROM "STYLE 6" TO "28L5119"

A-C

NOTED ON DETAILS

FINISH

NAME ASSY & INST LN-SWITCH-ELEC M.L.G. UP LATCH

SIZE C

28E5629

R

NOTE:
APPLY 28E5786-6 & 28E5786-7 TO INSIDE OF COVER 28E5633-7 ON RESPECTIVE BOXES. IF BLUEPRINT CUT-OUT IS USED, APPLY WITH & COVER OVER WITH SHELLAC (FOR PBY-5 C-91876 & PBY-5A. C-88476 #53 & ON ONLY). (E) (H)

4TH STRINGER ABOVE CHINE, STARBOARD SIDE

3RD STRINGER ABOVE CHINE

2ND STRINGER ABOVE CHINE, STARBOARD SIDE

2ND STRINGER ABOVE CHINE

*NOTE:
THIS DWG. PERTAINS TO 28-5ME SHIPS & ON.

L.H. VIEW LOOKING OUTB'D
-0 ASSY ONLY.
FWD.

INCHART BREAKDOWN		
-6	SUB ASSY.	.771
-7	SUB ASSY.	.771
-0	SUB ASSY.	.726
-2	SUB ASSY.	.824

L.H. VIEW LOOKING OUTB'D
-2 -3 & -4 ASSY ONLY
FWD.

LTR	ALTERATION	DATE	BY
E	E.O. #12004 E.O. #34128 E.O. A41746 E.O. A52590 E.O. A92443		
F	CREATED -1 SUB ASS'Y		
G	-4 ASS'Y. ADDED AN3064-8B & AN3066-8 (1) FOR -3		
H	SUB ASS'Y REQ WT CHG		
J			

PART NO	STOCK	MATERIAL	SPEC.	LST REQ -0	LST REQ -2	LST REQ -3	LST REQ -4	LST REQ -5
28E5786-7				1	1	1	1	1
AC6201-4				1	1	1	1	1
AN960-416				1	1	1	1	1
AC415-0416				1	1	1	1	1
AN315-00831-6				1	1	1	1	1
AN3064-8				1	1	1	1	1
AN3066-8				1	1	1	1	1
AN3064-4				1	1	1	1	1
AN3066-8				1	1	1	1	1
AN3064-8				1	1	1	1	1
AN3066-8				1	1	1	1	1
AN3064-5				1	1	1	1	1
AN960-416				2	2	2	2	2
AN515-4-8				2	2	2	2	2
28E5633-3				1	1	1	1	1
28E5692-7				1	1	1	1	1
-3 SUB ASS'Y				-	-	-	-	-
28E5786-7				1	1	1	1	1
QA6202-4				1	1	1	1	1
AN960-416				2	2	2	2	2
AC415-0416				2	2	2	2	2
AN515-4-8				2	2	2	2	2
AN3064-10				1	1	1	1	1
AN3066-10				1	1	1	1	1
AN3064-8				1	1	1	1	1
AN3066-8				1	1	1	1	1
AN3064-4				1	1	1	1	1
AN3066-4				1	1	1	1	1
28E5633-3				1	1	1	1	1
-4 SUB ASS'Y				-	-	-	-	-
28E5786-7				1	1	1	1	1
QA6202-4				2	2	2	2	2
AN960-416				4	4	4	4	4
AC415-0416				4	4	4	4	4
AN515-4-8				4	4	4	4	4
AN3064-10				1	1	1	1	1
AN3066-10				1	1	1	1	1
AN3064-8				1	1	1	1	1
AN3066-8				1	1	1	1	1
AN3064-4				1	1	1	1	1
AN3066-4				1	1	1	1	1
28E5633-2				1	1	1	1	1
28E5633-3				1	1	1	1	1
-5 SUB ASS'Y				-	-	-	-	-
NAF-2130129-4				1	1	1	1	1
NAF-2130129-5				1	1	1	1	1
QA6202-4				2	2	2	2	2
AN960-416				4	4	4	4	4
AC415-0416				4	4	4	4	4
AN515-4-8				4	4	4	4	4
NAF-2130129-4				1	1	1	1	1
NAF-2130129-5				1	1	1	1	1
NAF-2130129-2				1	1	1	1	1
NAF-2130129-3				1	1	1	1	1
NAF-2130129-4				1	1	1	1	1
NAF-2130129-5				1	1	1	1	1
AN960-416				2	2	2	2	2
AN515-4-8				2	2	2	2	2
28E5633-2				1	1	1	1	1
28E5633-3				1	1	1	1	1
-6 SUB ASS'Y				-	-	-	-	-
QA6202-4				2	2	2	2	2
AN960-416				4	4	4	4	4
AC415-0416				4	4	4	4	4
AN515-4-8				4	4	4	4	4
NAF-2130129-4				1	1	1	1	1
NAF-2130129-5				1	1	1	1	1
NAF-2130129-2				1	1	1	1	1
NAF-2130129-3				1	1	1	1	1
NAF-2130129-4				1	1	1	1	1
AN960-416				2	2	2	2	2
AN515-4-8				2	2	2	2	2
28E5633-2				1	1	1	1	1
28E5633-3				1	1	1	1	1
-7 SUB ASS'Y				-	-	-	-	-
AC6202-4				2	2	2	2	2
AN960-416				4	4	4	4	4
AC415-0416				4	4	4	4	4
AN515-4-8				4	4	4	4	4
NAF-2130129-4				1	1	1	1	1
NAF-2130129-5				1	1	1	1	1
NAF-2130129-2				1	1	1	1	1
NAF-2130129-3				1	1	1	1	1
NAF-2130129-4				1	1	1	1	1
AN960-416				2	2	2	2	2
AN515-4-8				2	2	2	2	2
28E5633-2				1	1	1	1	1
28E5633-3				1	1	1	1	1
-8 SUB ASS'Y				-	-	-	-	-

-6	PBY-5A	28E5786	1
-7	PBY-5	28E5786	1
-0	PBY-5A	28E5786	1
-2	A-20G	28E5786	1
-0	SA-5ME	28E5786	1
-0	SA-5MA	28E5786	1
-2	SA-5ME	28E5786	1

MODEL	ITEM ASSY	NO.
REQUIREMENTS FOR AIRPLANE		
REPLACED	RATED 8-24-41	NOTED Basic Dwg.
REPLACED BY		ASY QTY

SCALE 12"-1-0

NAME ASSY & INSTALL. - ELECT-ROMANS HEATER JUNC. BOX.

CONSOLIDATED AIRCRAFT CORP. San Diego, Calif.

SIZE C | DWG NO 28E5637

LET	ALTERATION	DATE	BY

LET	ALTERATION	DATE	BY
A	[illegible]	[illegible]	[illegible]
B	[illegible]	[illegible]	[illegible]
C	[illegible]	[illegible]	[illegible]
D	[illegible]	[illegible]	[illegible]
E	[illegible]	[illegible]	[illegible]
F	[illegible]	[illegible]	[illegible]
G	[illegible]	[illegible]	[illegible]

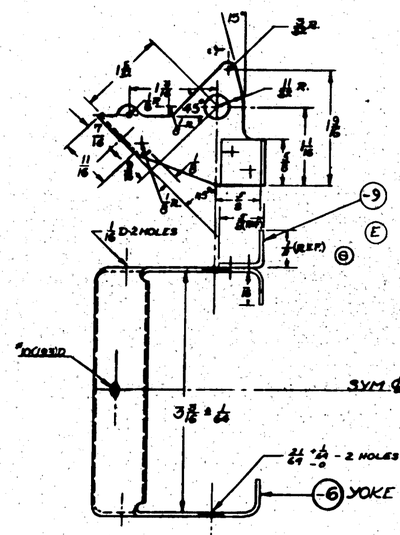

E -10 ℄ SUB ASSY
-10L SHOWN
FINISH-CP-2AL

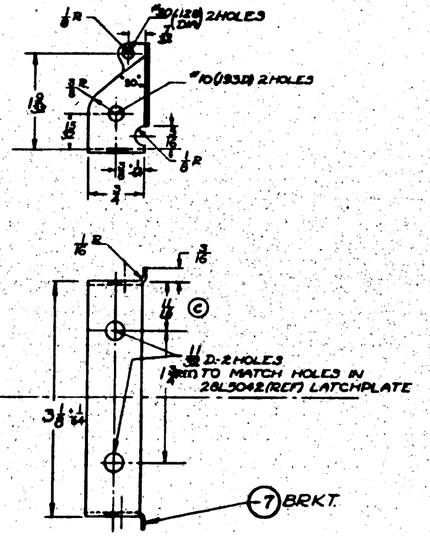

DETAIL-7

FINISH-CP-2GP

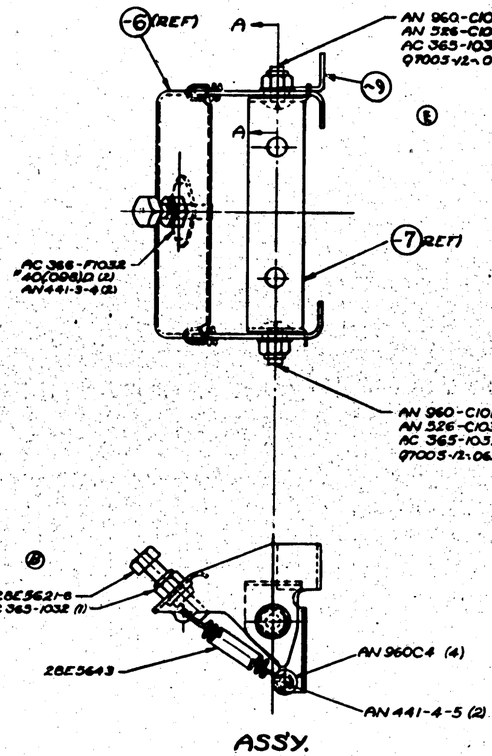

ASSY.

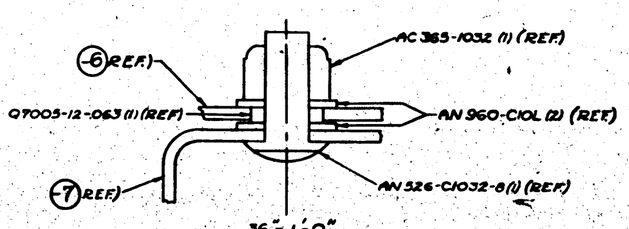

36" = 1'-0"

SECTION "AA"

NOTES:-
1-BEND ℄ RELIEF RADII ⅛ ℄ NOTED.
F 2-AN526-1032-8 MAY BE USED AS AN ALTERNATE FOR AN526-C-1032-8.
G 3-MAT'L. FOR -9 MAY BE-
(A) Y-6-AGT X ¾, OR
(B) K9876 X ¾, AL. AL. EXTR., SPEC. QQ-A-354-T.

GP-GREEN PRIME
FINISH CC

Z	ANODIC TREATMENT
P	A-27 PRIMER
AP	ALUMINIZED PRIMER
C	CADMIUM PLATE

PART No	STOCK	MATERIAL	SPEC.	LAST SHIP REQ.	LAST SHIP REQ.	LAST SHIP REQ.	LAST SHIP REQ.	LAST SHIP REQ.	LAST SHIP REQ.	LAST SHIP REQ.
AN442-03										
-5	NOTED	NOTED	NOTED	1	1					
-6	.070 x 2½ x 7	C.R. STEEL	4130 ℄	1	1					
-10L	SUB ASSY									
97005-12-063				2	2					
AC 366-F1032						1	1			
AC 365-1032						1	1			
AN960C8						4	4			
AN960-C10L						4	4			
AN526-C1032-8 (SEE NOTE *3)						2	2			
-L 28-5AHN	28E3644-1			1	1					
-R 28-5AHN	28E3644-2			1	1					
-L ¼-28 NJTC	28E3644-1			1	1					
-R ¼-28 NJTC	28E3644-2			1	1					
-L ¼-20	28E3644-1			1	1					
-R ¼-20	28E3644-2			1	1					
-8 PDX-5A	28E3644			1	1					
LAST SHIP QUAN.	MODEL	NEXT ASSY.	USE							
REQUIREMENTS PER AIRPLANE										
DISPLACED			.10 QUAN. WT.							
DISPLACED BY			ACT. WT.							
LAST SHIP QUAN. 1	SCALE 12"=1'-0"									
NEXT SHIP QUAN. 1	NOTED									
STAMP PART NUMBER WHERE SHOWN										

PARTS LIST PER ASSY.

A.C.					
HEAT TREAT: NORMALIZE	FINISH: NOTED -	DRAFT	CHECK	STRUCT	MAT.
NAME: ASSY & DETAILS-ELEC-SWITCH ACTUATOR STRUT LATCH-MLG DN					
CONSOLIDATED AIRCRAFT CORP. SAN DIEGO, CALIF.				SIZE: G	28E3643

LET	ALTERATION	DATE	BY

LET	ALTERATION	DATE	BY
A	CHANGED LOCATION OF REF. FROM (R) TO (C) ADDED 4 ASSY. REF. TO 28B5500-1801 & 1803 ADDED 28B1473 REF. ADDED (D)	9 Aug	
B	2ND SHIMS ADDED PER A/N ADDED	10 Feb	
C	CHANGED -2 ASSY. FROM 28E5665-1 TO 28E5665-2 INCORPORATED.	10 Mar	
D	CREATED -3 ASSY. SAME AS -0 ASSY. EXCEPT 28E5665-4 (1) REQ'D. PLACES 28E5665-0 (1) DELETED - 3 ASSY. PER PBY-5A A/N 28E5665-3 (1) AS NEXT ASSY. (2) LIMITATIONS TO ± .13 INCL. CAM.	6-22-43	

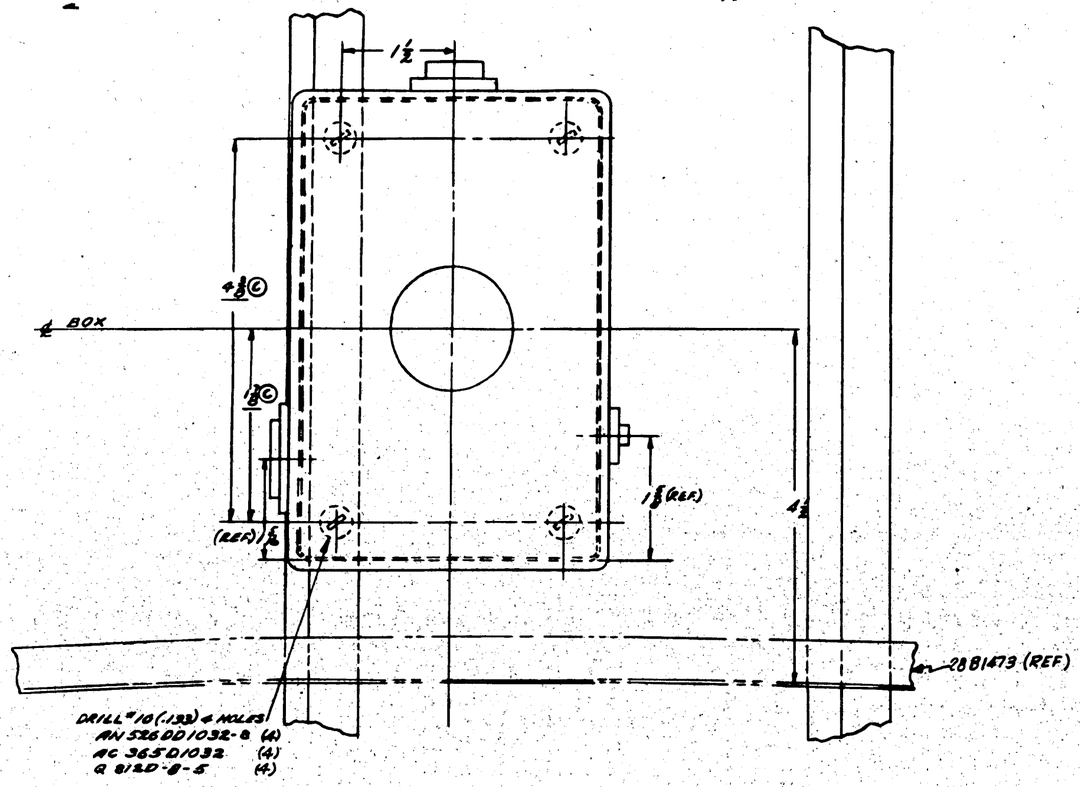

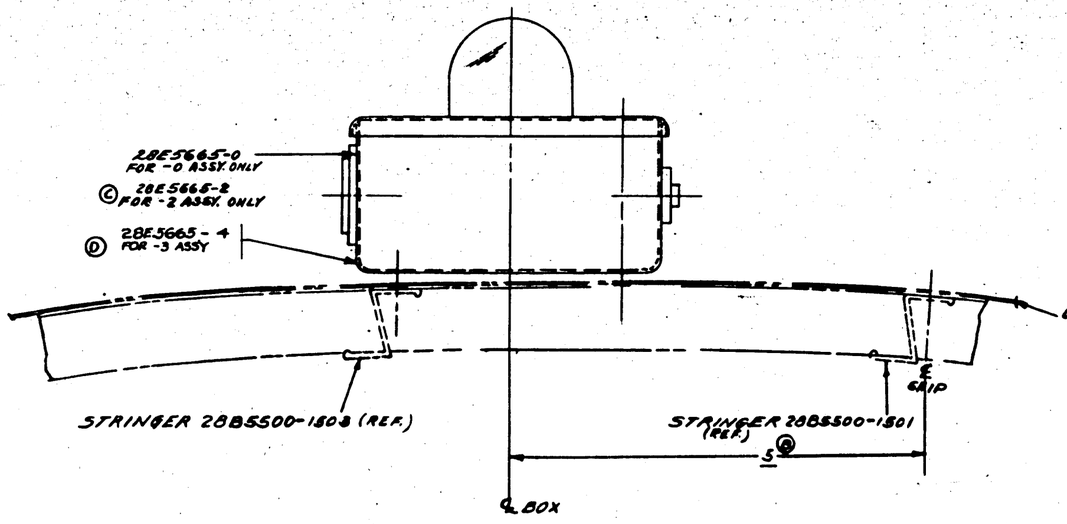

Ⓓ WT. NOTE (CALC.)
-3 ASSY .87#

NOTE (3) 464

C-77713
C-70436
C-88476
ONLY

ITEM NO.	PART NO	STOCK	MATERIAL	SPEC.	-0 REQ.	-2 REQ.	-3 REQ.	-4 REQ.	-5 REQ.
	PARTS LIST PER ASSY.								
-3	PBY-5A	28E5663	1				1		
-2	28-5A-C		1			1			
-0	OP-10		1		1				
-0	PBY-5A	28E5663	1					1	
	REQUIREMENTS PER AIRPLANE				1	1	1	1	1
	REPLACED								
	REPLACED BY								

SCALE	12" = 1'-0"
STAMP PART NUMBER WHERE SHOWN	

A.C.
NAVY NONE
HEAT TREAT

NONE
FINISH

DRAFT	6-6-41			
BALANCE	6-7-41			
CHECK		STRESS	A.C.C. APPROV.	7/24/41
DRAFT		STRESS	MAT	
			APPROV.	

NAME BOX INST. - ELEC. - MECH'S. COMPT. LT. & JUNCTION

CONSOLIDATED AIRCRAFT CORP. San Diego, Calif.

OPP. HAND

SIZE G

DWG. NO. 28E5666

R

99953

LET	ALTERATION	DATE	BY	LET	ALTERATION	DATE	BY
				A	ADDED AC366-F428, AN425AD3 & AC363-1032. AN3-5A REPLACES AN4420DB IN ASM & PLACE	11-4	[illegible]

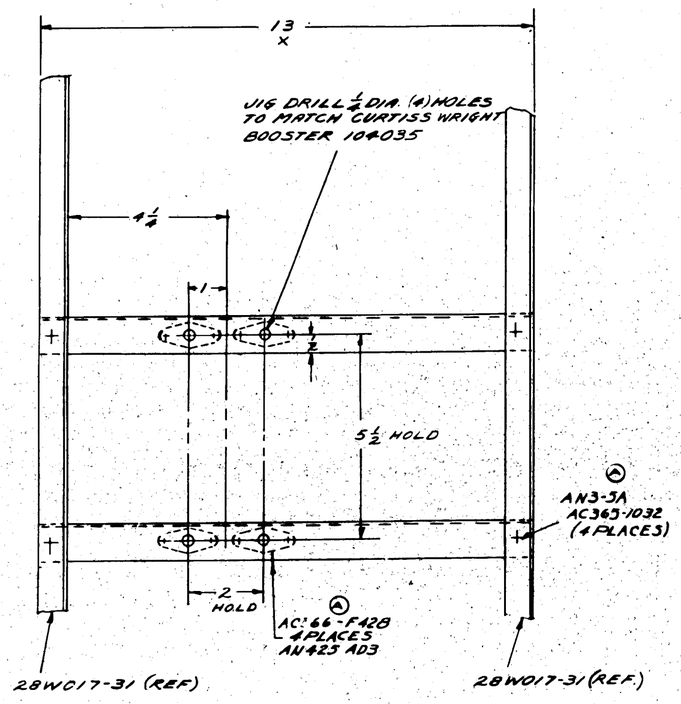

VIEW AA

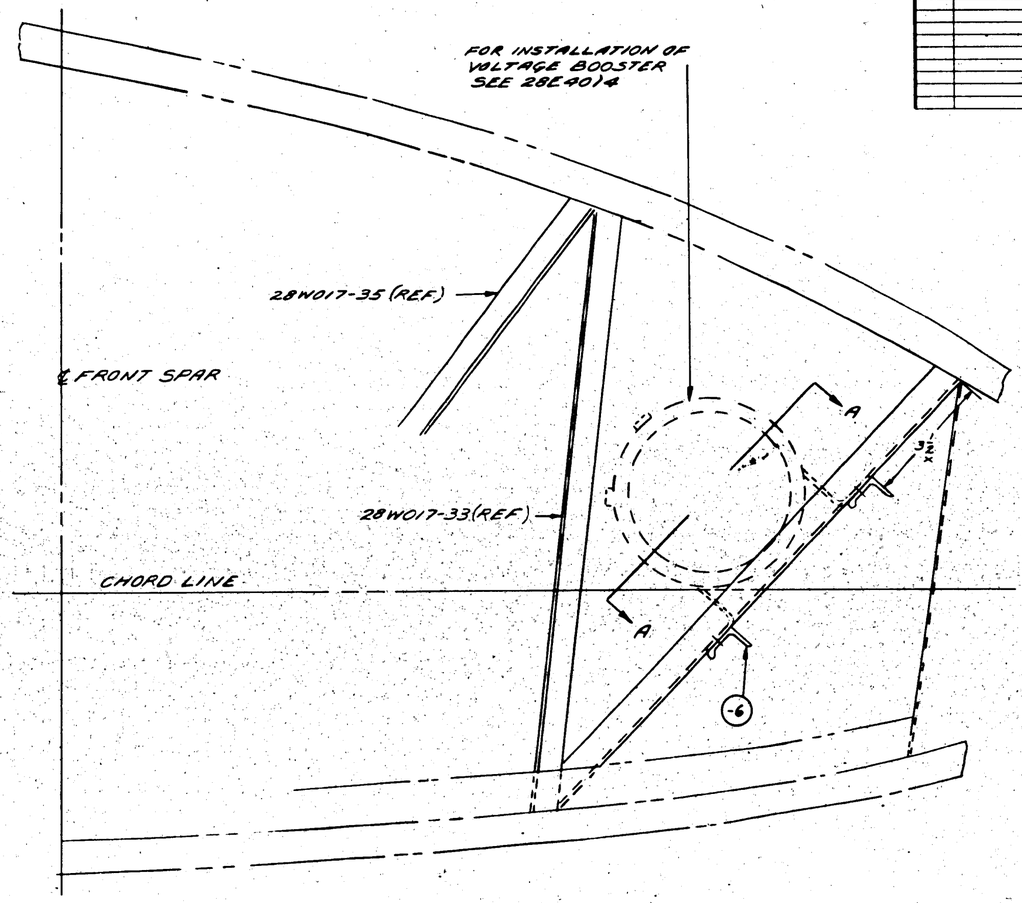

NOTE:
DIMENSIONS MARKED X ARE APPROX. ONLY. ESTABLISH ACCURATELY ON FIRST INSTALLATION
ALL RIVETS TO BE 3/16 DIA.

SHIPS 59 TO 67 INCL (2347-2355)
134 TO 139 (2422-2427)
PRELIMINARY DRAWING HAS BEEN DELIVERED TO F.A.

ASSY DASH NO.	MODEL	NEXT ASSY	REQ.
-0	PBY-5	28W3017	1

REQUIREMENTS PER AIRPLANE

REPLACES — CALC. WT.

REPLACED BY — ACT. WT.

LOFT OR ENGINEERING DWG. NO. — DIMENSIONS SHOWN ON THIS DRAWING — SCALE 6"=1'-0"

STAMP PART NUMBER WHERE SHOWN

PART No	STOCK	MATERIAL	SPEC.	LH REQ. -0	RH REQ. -0	LH REQ. -2	RH REQ. -2	LH REQ. -3	RH REQ. -3	LH REQ. -4	RH REQ. -4	LH REQ. -5	RH REQ. -5
-0	K1230X1 3/8	ALCOA	46A9 CANOT	2									

PARTS LIST PER ASSY.

AN425AD3
AC166-F428
AN3-5A
AC363-1032

A 11-4

A.C.		A.S.W. Bonham		JFR.	
Navy NONE	Z-2AKV	GALLEMORE-31-42		FAF	
HEAT TREAT	FINISH	DRAFT	CHECK	STRUCT	MAT

NAME INST.-ELEC.-RH. L.E. BLKHD 2 BOOSTER MOUNTING BRAKETS

OPP. HAND

CONSOLIDATED AIRCRAFT CORP. SAN DIEGO, CALIF.

DWG. G 28E5679

NOTE.
- BOND IN ACCORDANCE WITH BONDING REPORT 28E1017
- FIGURES IN ⓐ SQUARES REFER TO 28E1027.
- TUBES 28F5721-175, -176, -177, -178, -179, & -180 ARE THE NEW NOS OF 28F1020-175, -176, -177, -178, -179, & -180 AS MADE AND STOCKED PER E.O. C4019 (AGAINST 28E1020 E).
- FINISH TUBES WITH 1 COAT PRIMER.

LET	ALTERATION	DATE	BY

LET	ALTERATION	DATE	BY
A	ADDED BRACE [illegible] (DELETED)	[illegible]	
B	[illegible]	[illegible]	
C	[illegible]	[illegible]	

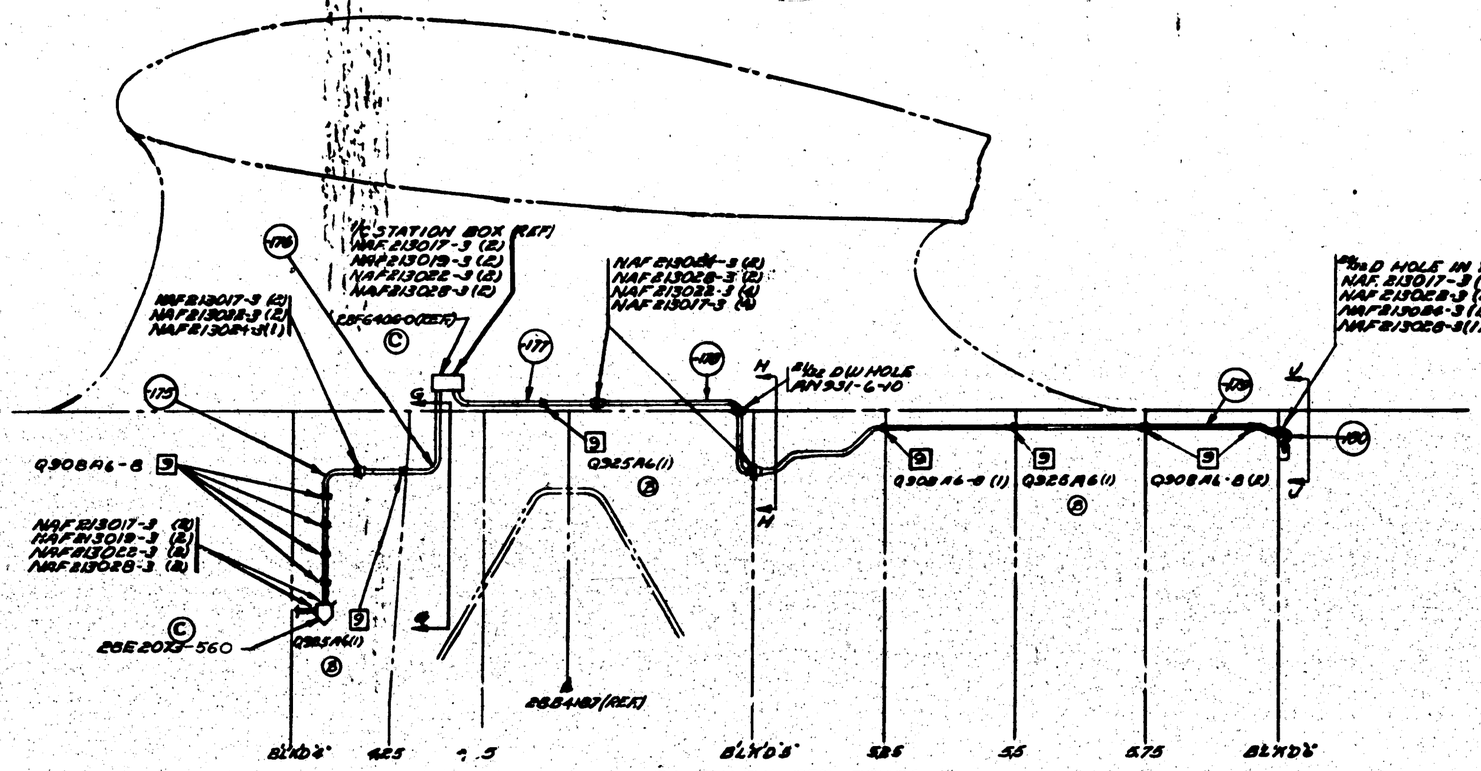

SUPPLEMENTARY VIEW FOR PBY5A
R.H. VIEW LOOKING OUTBOARD

Ⓐ NOTE: DRILL ¼ DRAIN HOLE IN LOWEST POINT OF ALL CONDUIT BOXES. (WHEN SHIP IS ON BEACHING GEAR)

Ⓑ FOR INSTALLATION OF CONDUIT BETWEEN BLKD'S 7.5, (CALLED FOR IN 4/A BUT NOT SHOWN) SEE 28E1020 SHT #1

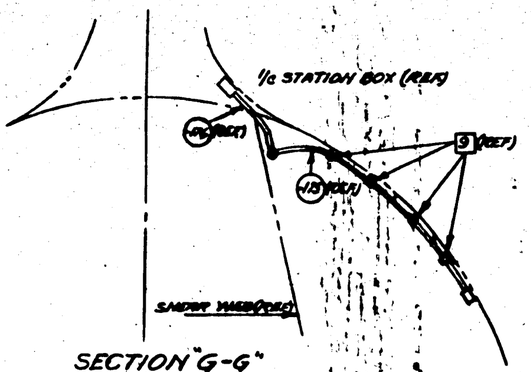

SECTION "G-G"
B.F. 4.5
LOOKING F'W'D

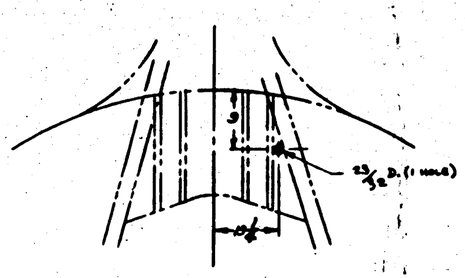

SECTION "H-H"
BLK'D. 5 LOOKING F'W'D

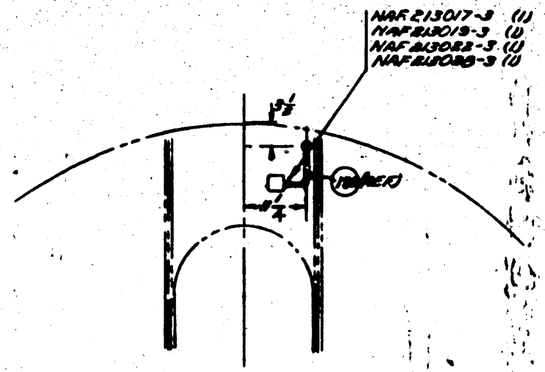

SECTION "J-J"
BLK'D. #6
LOOKING F'W'D

THE DASH NOS. ON THIS DRAWING ARE IN WORK UNDER E.O. A24019 WHICH HAS BEEN ON THIS DRAWING

ALL

PART NO	STOCK	MATERIAL	SPEC.	LIST MATERIAL -1	-2	-3	-4	-5
	PARTS LIST PER ASSY.							

NAVY MONE	AMERO		
HEAT TREAT	FINISH		

NAME CONDUIT INST.-ELEC.-
INTERPHONE BLKD & A.E.T.
CONSOLIDATED AIRCRAFT CORP.

SIZE G
28E5728

LET	ALTERATION	DATE	BY	LET	ALTERATION	DATE	BY
A	ADDED AN931-7-11(1)	4-14-41	[illegible]				
B	ADDED 28E2024-120(11) WITH [illegible]						
C	CREATED -2 ASS'Y.	4-14-41	[illegible]				
D	IN "REQ'D" COL. - 1 FOR -2 ASS'Y. WT. CHG. - 1 FOR -2 ASS'Y. IN "REQ'D" COL. FOR -2 (PBY-5A) PER R11-1 TO PER 1A WAS PER R11-1. NO WT. CHG.	8-9-41	[illegible]				

E.O. 834-533
E.O. A 55288

Q E.O. R111-3 ACCUM'D PER 1A

AN515-6-7 (8)
AC365-632 (8)
Q7102-AL6 (16)

28E5752 (FOR -0 ASS'Y.)

28E5753-2 (FOR -2 ASS'Y.) ©

AN3064-3 (2)
AN3066-3 (2)

NAF1150-3A-15 (1)

NAF1150-3A-18 (1)

NOTE: USE AN3054-3 KNURLED NUT FURNISHED WITH EACH TYPE X220 LAMP ASSEM.

ELECTRONIC LABORATORIES TYPE X220 LAMP ASSEM.

28E5753-2 (FOR -2 ASS'Y.) ©

28E 5753 (FOR -0 ASS'Y.)

28E2024-120(11) Ⓑ
NAF 218672-120(2)
AN515-8-14 (2)
AC365-832 (2)
Q7102-AL8 (2)
FOR -0 ASSY. ONLY

AN931-7-11 Ⓐ

FRONT VIEW COVER REMOVED

ASSY.	WEIGHT
-0	1.92
-2	1.42

MCR 211-1 TO MCR 1A
MCR 211-1 C-9816 1-345 C-8896 ONLY

REQ'D	MODEL	PART ASSY.	SPEC.
-2	PBY-5A	28E5771	/
-2	PBY-5	28E5771	/
-2	PBY-5	28E5771	/
-0	PBY-5A	28E5771	/

REQUIREMENTS PER AIRPLANE
REPLACES — NOTED CALC. QTY.
REPLACED BY — ACT. QTY.
SCALE 12"=1'0"
STAMP PART NUMBER WHERE SHOWN

PART No	STOCK	MATERIAL	SPEC.	LH REQ. -0	RH REQ. -2	LH REQ. -3	RH REQ. -4	LH REQ. -5	RH REQ. -6
28E5753-2					1				
Q7102-AL8					2				
AC365-832					2				
AN515-8-14					2				
NAF 218672-120					2				
28E2024-120					1				
ELECTRONIC LAB. TYPE X220 LAMP ASSEM.					2		2		
AN931-7-11					1		1		
AN515-6-7					1		1		
28E5752					1		—		
AN3064-3					2		2		
AN3066-3					2		2		
AN515-8-7					8		8		
AC365-632					8		8		
Q7102-AL6					16		16		
-6									

PARTS LIST PER ASS'Y.

A C
NAVY NONE
HEAT TREAT — NONE — FINISH
DRAFT [illegible] 4-6-41
CHECK [illegible] 4-18-41
STRESS — MAT — APPROV — ENG.
NAME INSTALLATION - ELEC - FLUORESCENT LIGHTS - PILOT'S COMPT.
CONSOLIDATED AIRCRAFT CORP. SAN DIEGO, CALIF.
OPP. HAND NONE
SIZE G
DWG. 28E5752

K

LET	ALTERATION	DATE	BY	LET	ALTERATION	DATE	BY
A	ADDED AN931-7-11(A)	4-14-41	TC				
B	ADDED 28E2024-120(1) [illegible]	[illegible]	[illegible]				
C	CREATED "R" ASS'Y. WT. CHG. -.1 [illegible]	[illegible]	[illegible]				
D	IN WEB/AIRCRAFT BUY. LIGHT FOR "R" (P81-58) PER 211-1 TO PER 1A WAS PER 211-1. NO WT. CHG.	[illegible]	[illegible]				

E.O. 834-533
E.O. A 32283

Q.C.P. 1113 Rev. 1
MCR 1A

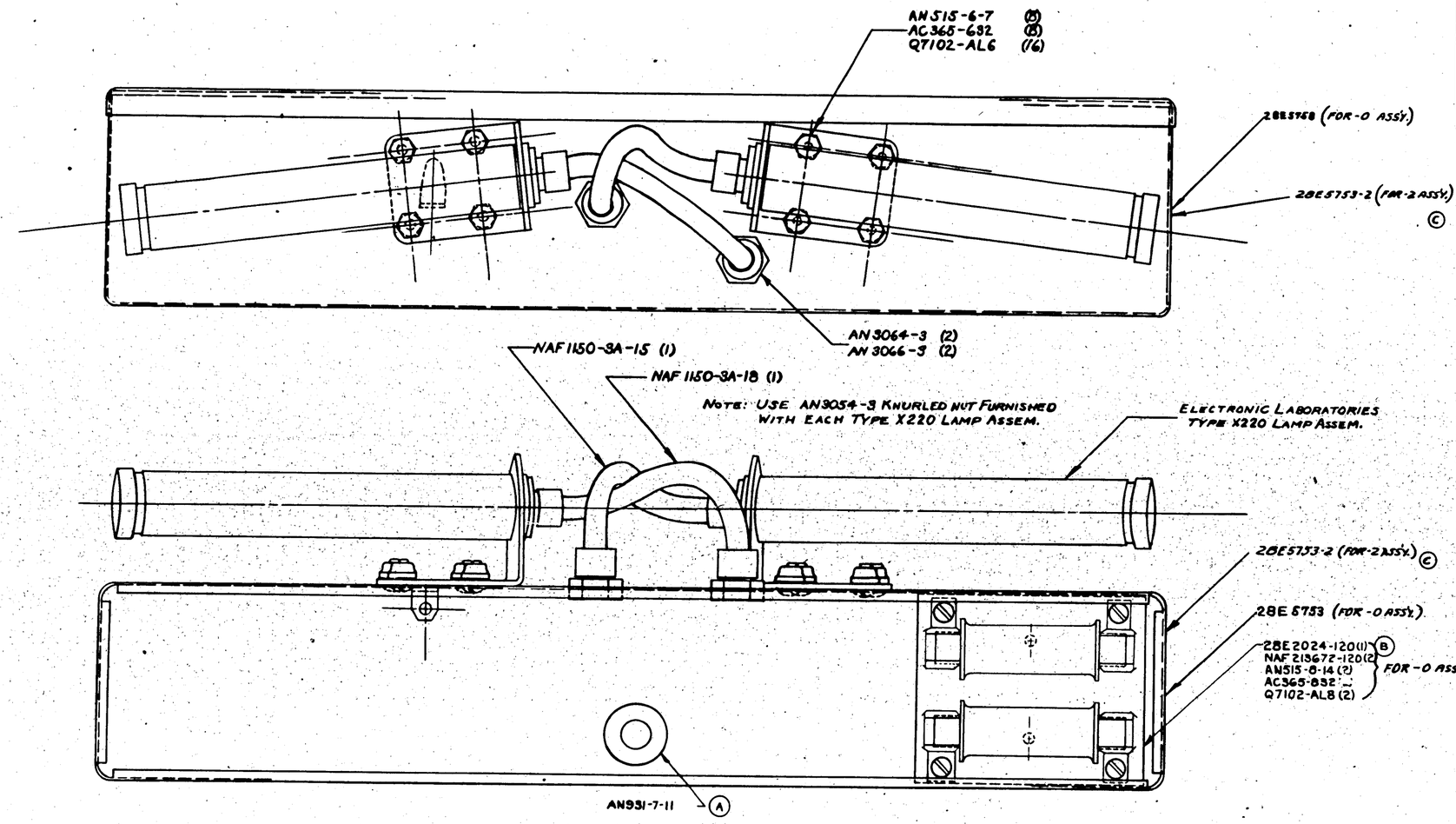

FRONT VIEW COVER REMOVED

ASS'Y.	WEIGHT
-0	1.92
-2	1.42

MCR 211-1 TO MCR 1A PER 211-1 (9.8.41)

EFF. SALES NO.	MODEL	NEXT ASS'Y.	NO.
-2	PBY-5A	28E5771	1
-2	PBY-5	28E5771	1
-5	PBY-5	48E5771	1
-6	PBY-5A	28E5771	1

1-346
C-8847 ONLY

REQUIREMENTS PER AIRPLANE

REPLACES — NOTED SALES NO.

REPLACED BY — ASS'Y. NO.

SCALE 12"=1'0"

STAMP PART NUMBER WHERE SHOWN

PART No	STOCK	MATERIAL	SPEC.	LH REQ.	RH REQ.	LH REQ.	RH REQ.	LH REQ.	RH REQ.	LH REQ.	RH REQ.
				PARTS LIST PER ASS'Y.							
				-0	-2	-3	-4	-5			
28E5753-2					1						
Q7102-AL8				2							
AC365-832				2							
AN515-8-14				2							
NAF213672-120				2							
28E2024-120				1							
ELECTRONIC LAB. TYPE X220 LAMP ASSEM.				1	2						
AN931-7-11				1	1						
NAF1150-3A-15				1	1						
NAF1150-3A-18				1	1						
28E5768				—	—						
AN3064-3				2	2						
AN3066-3				2	2						
AN515-6-7				8	8						
AC365-632				8	8						
Q7102-AL6				16	16						
-6											

A C			11-6-41		
NAVY NONE	NONE	E.I. NUMBER	[illegible]	JFR	[illegible]
HEAT TREAT	FINISH	DRAFT	CHECK	STRUCT	MAT	APPROV	ENG.

NAME INSTALLATION-ELEC-
FLUORESCENT LIGHTS-PILOTS COMPT.

OPP. HAND NONE

DWG. G SIZE

DWG. 28E5752

CONSOLIDATED AIRCRAFT CORP. SAN DIEGO, CALIF.

K

LET	ALTERATION	DATE	BY
A	ADDED (6) #28 (.140) HOLES & LOCTITE PER 28E2024 - ADDED NOTE: "6 HOLES - - - LAMP BRKT. WT. CHG NEG.	4-4-41	[illegible]
B	ADDED (2) #18 (.169) HOLES & NOTE: "#18 (.169) - MATCH 28E2024 - REQ. ADDED LOCTITE DIMS. 1 1/2, 2 3/4 & 5/16 MAINTAINED	4-4-41	[illegible]
C	IN B/M 28E2051-560 MKR. 28E2051-550 - ADDED 2 #32 HOLE & LOCTITE DIM. NEG. WT. CHG.	4-4-41	[illegible]
D	CREATED -2 ASSY. W/CHANGE	2-5-41	MOE
E	CREATED -3 ASSY. PER PRV -STA. NO. 28E5754 WRITTEN. -2 ASSY. (PREV. -3A) TO MKR 211-3 TO MKR 1A. WT. CHG. NEG.		

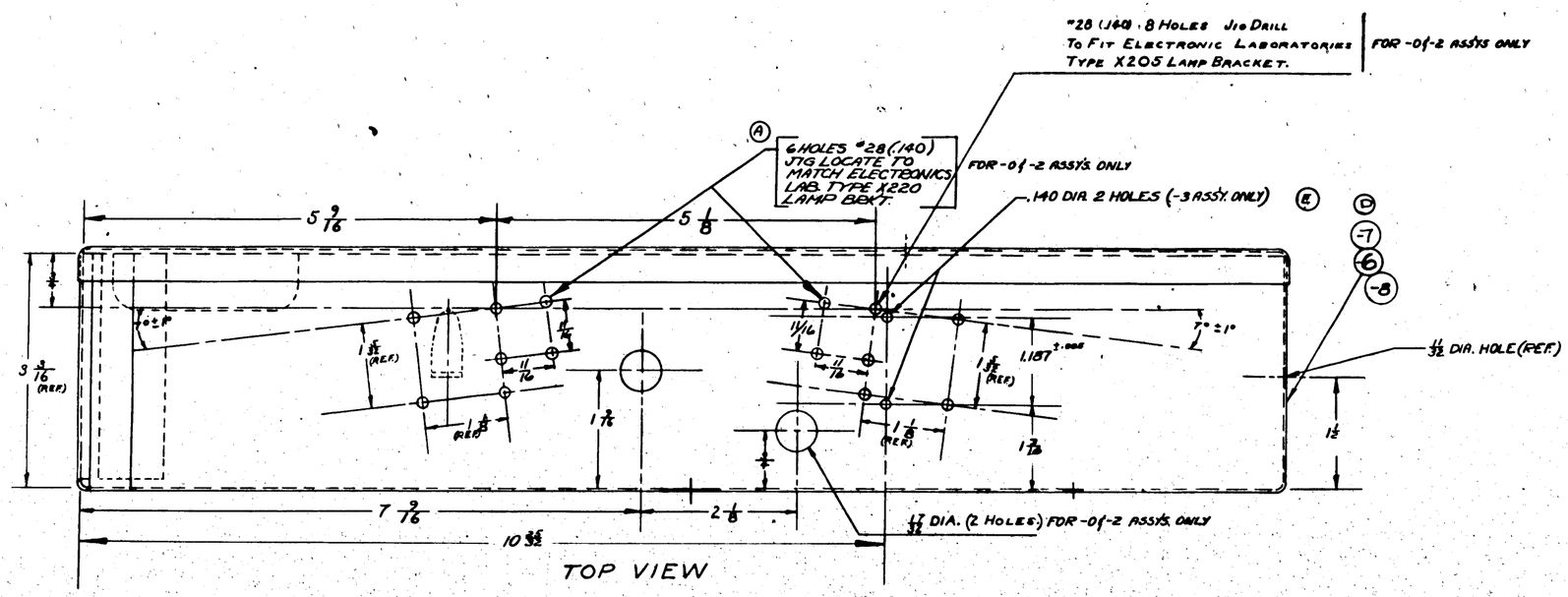

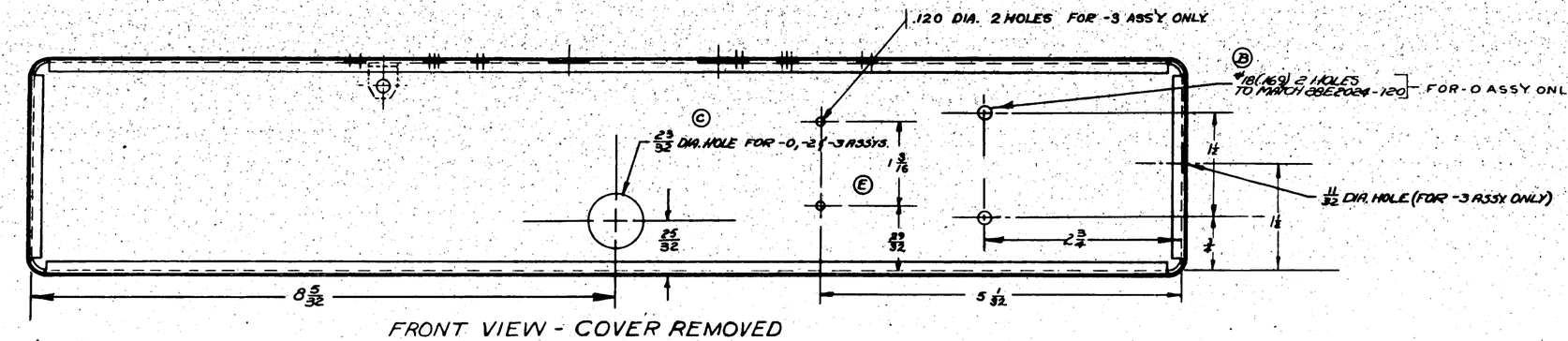

D

-0, -2 & -3 ASSYS.

MKR 1A
MKR 211-H TO MKR 1A
MKR 211-1
C* 91876 1-345
CONTRACT No. 88876 ONLY

S.O. 953-3

DASH NO.	MODEL	NEXT ASSY.	QTY.
-3	PBY-5A	28E5754	1
-2	PBY-5A	28E5753	1
-2	PBY-5	28E5753	1
-0	PBY-5	28E5752	1
0	PBY-5A	28E5752	1

REQUIREMENTS PER AIRPLANE

REPLACES

REPLACED BY

.74 GALS. QTY.

ACT. WT.

SCALE 12" = 1'0"

STAMP PART NUMBER WHERE SHOWN

PART No	STOCK	MATERIAL	SPEC.	-0 REQ.	-2 REQ.	-3 REQ.	-4 REQ.	-5 REQ.
-8	28E2051-560					1		
-7	28E2051-560				1			
-6	28E2051-560			1				

PARTS LIST PER ASSY.

A C
NAVY None
HEAT TREAT
None
FINISH

1-7-41 RJ MOORE DRAFT
4-4-41 R.L. CHECK
11-28-41 W. GROSS
M.A.T.
APPROV.
ENG.

NAME DRILLING DETAIL - ELEC. - FLUORESCENT LIGHTS PILOT'S SIGNAL BOX

OPP. HAND None

CONSOLIDATED AIRCRAFT CORP. San Diego, Calif.

DWG. G DES. 28E5753

R

LET	ALTERATION	DATE	BY	LET	ALTERATION	DATE	BY

FORWARD

STA. 166 (REF.)

TOP VIEW

AN442AD4 RIVETS

-7

#10 (.193) ⌀ HOLES

-6

2884201-101 SUB ASS'Y. (REF.)

9 (REF.)

$\frac{1}{2}$ MIN.

$\frac{1}{2}$ MIN.

$3\frac{3}{4}$

$1\frac{3}{8}$

$1\frac{1}{2}$

$\frac{1}{2}$

$10\frac{1}{8}$

$\frac{1}{2}$

$3\frac{7}{16}$

AFT PORT SIDE SUPPORT UNDER PILOT'S SEAT. VIEW LOOKING FORWARD

FINISH CODE	
Z	ANODIC TREATMENT
P	P-27 PRIMER
AP	ALUMINIZED PRIMER
C	CADMIUM PLATE

PART NO	STOCK	MATERIAL	SPEC.	-0 REQ.	-2 REQ.	-3 REQ.	-4 REQ.	-5 REQ.
-7	RHOSOX			STAMP				
-6	CRESYLIC	SHEET ALUM.		STAMP				

PARTS LIST FOR ASSY.

A C NAVY NAVIC	Z-P-AP				
HEAT TREAT	FINISH	GROUP	CONTROL	CERT	APPROV

NAME INSTALLATION-ELEC-INVERTER MOUNTING BRACKET

CONSOLIDATED AIRCRAFT CORP. San Diego, Calif.

SPEC. NAME NONE

SIZE A DWG. NO. 28E5757

LET	ALTERATION	DATE	BY
A	ADDED Q812-D6-32(4) NEG. WT CHG.	[illegible]	[illegible]
B	Q5106 D10-24(4) WAS Q5106 D10-8(4) WT. CHG [illegible]	[illegible]	[illegible]
	[illegible]		

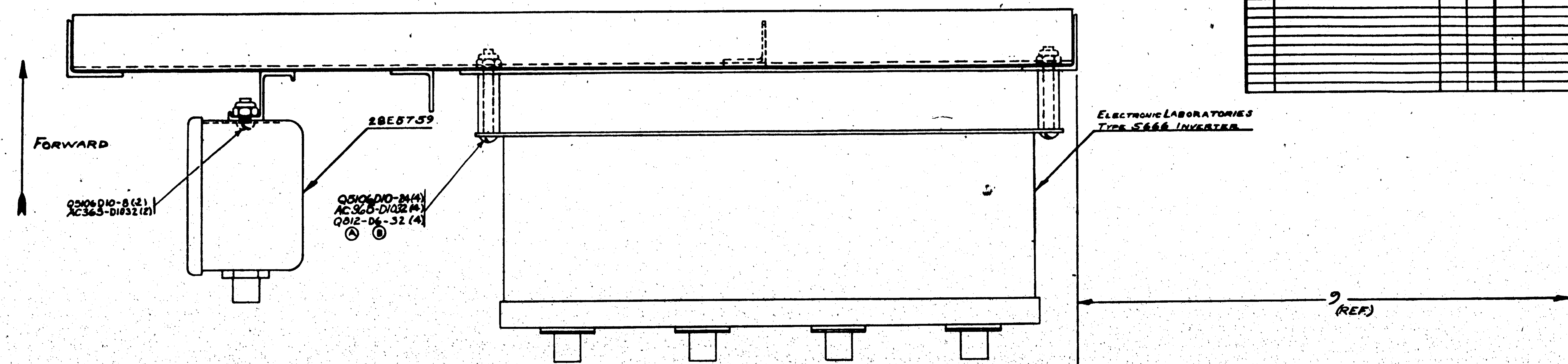

TOP VIEW- LOOKING DOWN

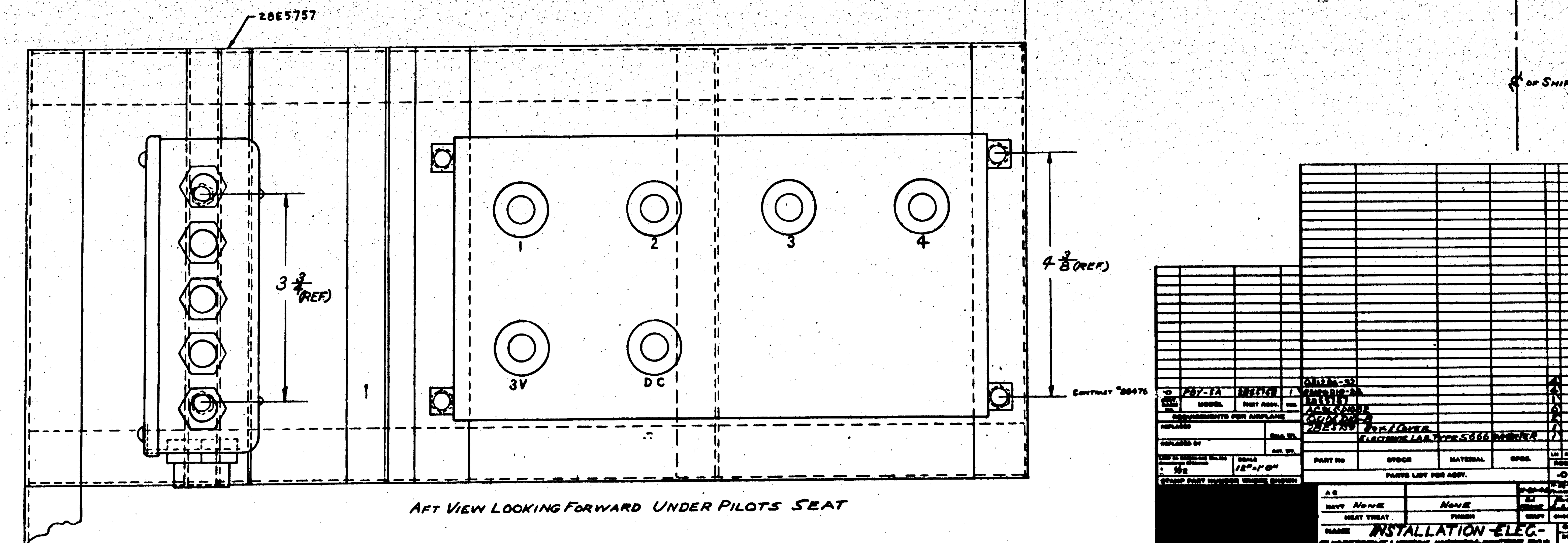

AFT VIEW LOOKING FORWARD UNDER PILOTS SEAT

PART No	STOCK	MATERIAL	SPEC.	REQ. -0
Q812-D6-32				A
Q5106 D10-24				B
28E5757				1
AC363-D1032				A
Q5106 D10-8				B
28E5759	BOX & COVER			1
	ELECTRONIC LAB. TYPE S666 INVERTER			1

PARTS LIST FOR ASSY.

DASH No.	MODEL	NEXT ASSY.	REQ.
-0	PBY-5A	28E5758	1

REQUIREMENTS FOR AIRPLANE

REPLACES — CALC. WT.
REPLACED BY — ACT. WT.
SCALE 12" = 1'-0"
STAMP PART NUMBER WHERE SHOWN

A C
NAVY None — None
HEAT TREAT — FINISH
DRAFT — CHECK — STRUCT — MAT — APPROV.
9-25-41 — 12-2-41 — 2-3-41
NAME INSTALLATION - ELEC.- FLUORESCENT LIGHTING INVERTER/JUNCTION BOX
OPP. HAND None
DWG. SIZE G 28E5761
CONSOLIDATED AIRCRAFT CORP. SAN DIEGO CALIF.

LET	ALTERATIC	DATE	BY
H	ON FACE OF DWG & 8/4 FOR-2 ASSY. ADDED AN515-4-8(1) AC372-4(1) & Q7102-AL4(2) WT. CHG. NEG.	3-25-43	
J	AN515-6-14(8) WAS (4). REMOVED AN515-6-12(4). WT. CHG. NEG.	7-5-43	
K	CREATED -3 ASSY. WT. CHG. .3	8-10-43	

FLR 15779

MCR 1A

LET	ALTERATION	DATE	BY
A	AN515-6-14(4) WAS AN515-6-13(4) NO WT. CHG.	7-2-42	
B	ADDED Q908-A8-8, AC365-D1032, AN520-D10-12, LOCATING DIMS 6 5/8 & 1 7/8 & #10(.193) HOLE. NEG. WT CHG.	7-28-42	
C	REMOVED "DRILL #10(.193) HOLE" CHGD LOCATION OF Q908-A8-8 & DIM. 7 WAS 6 5/8 & DIM. 1 1/4 WAS 1 7/8. NO WT. CHG.	12-2-42	ROSS
D	ADDED NOTE TO BE STENCILED "ANTI-ICER -- CONTROLS" & LOC DIM'S. NO WT. CHG.	1-19-43	MOE
E	CREATED -2 ASSY. NEG. WT CHG.	1-19-43	MOE
F	IN -10 SUB ASSY, 28E5374 WAS 28E5374-6. NO WT. CHG.	2-13-43	
G	FOR MCR 211-1, REM'D NNE-031-12(1) AN430-2(1) & NAF1099-25-175(1); 28E5752-2 REPLACED 28E5752-0. WT. CHG. -2 ASSY -.25#	2-13-43	

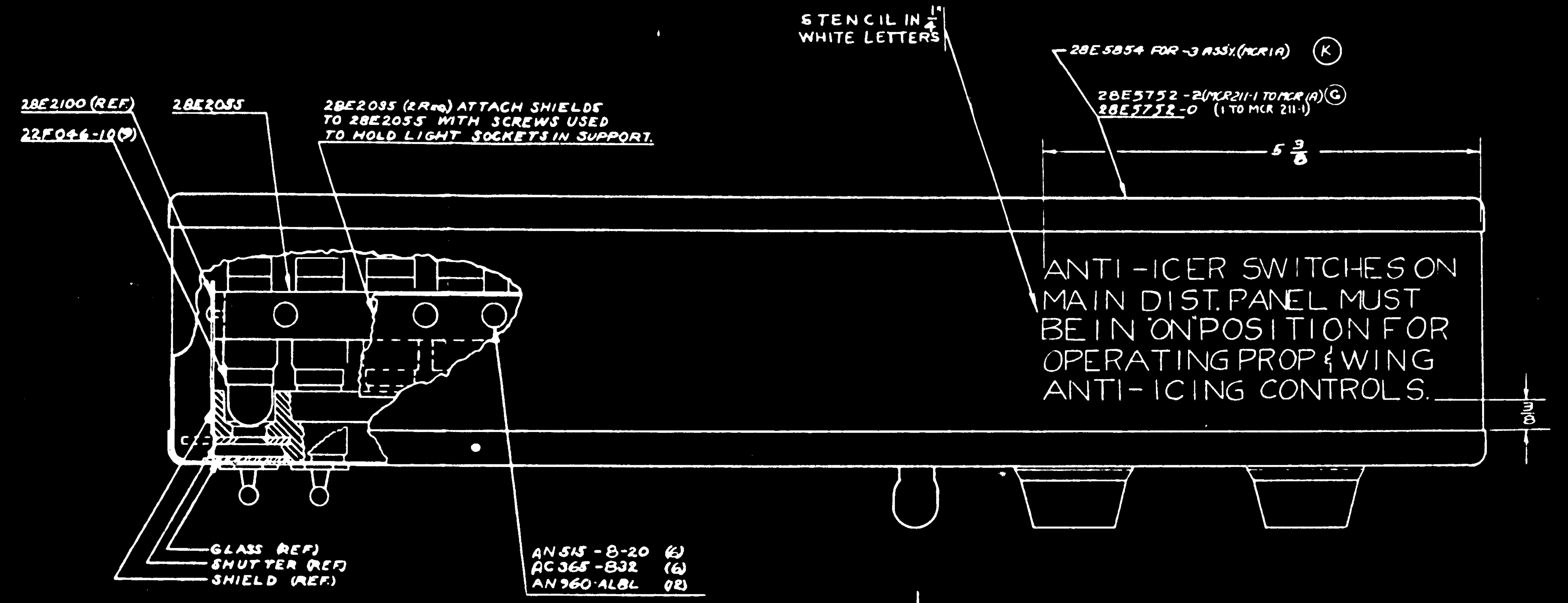

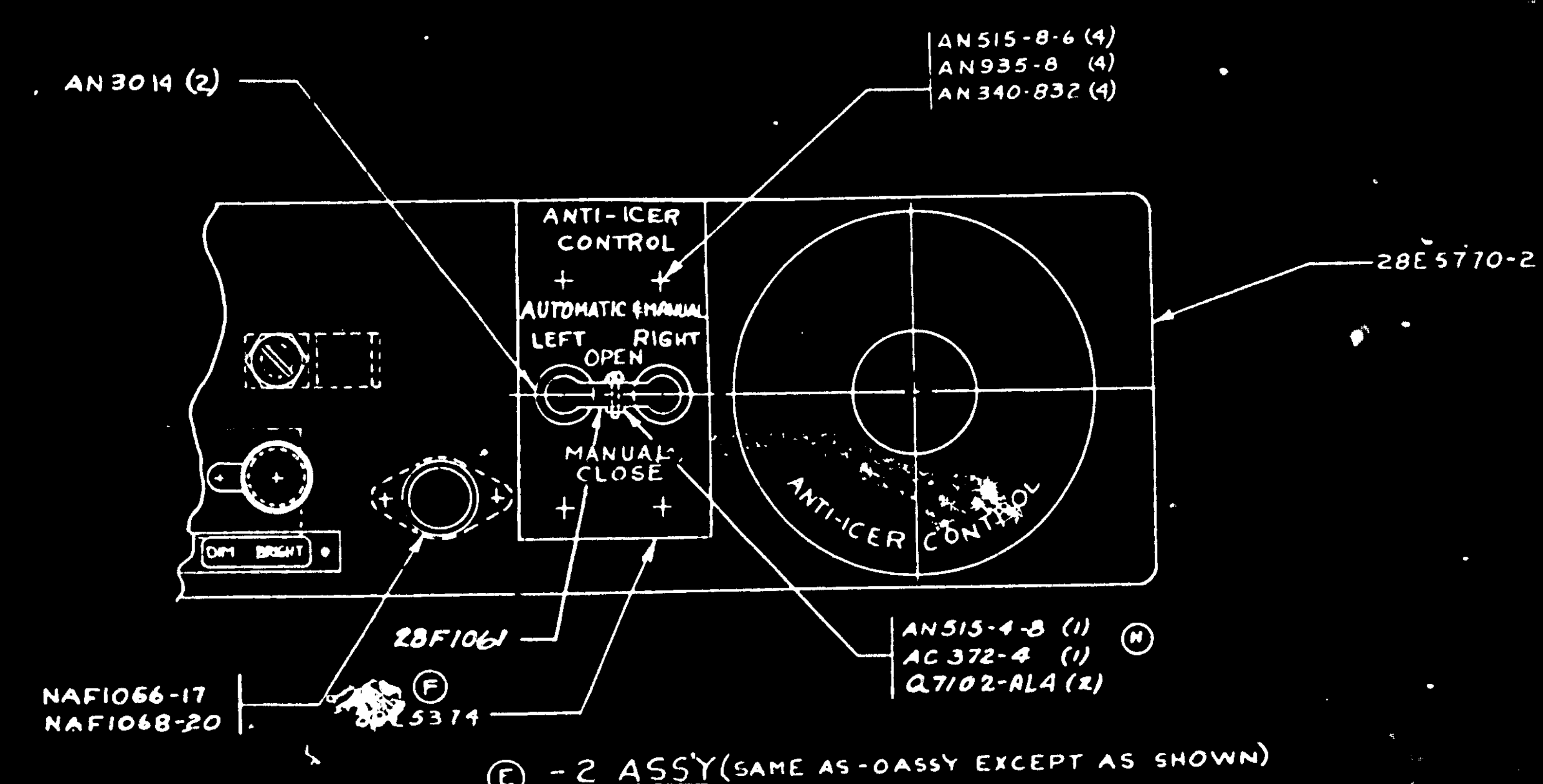

(E) -2 ASSY (SAME AS -0 ASSY EXCEPT AS SHOWN)

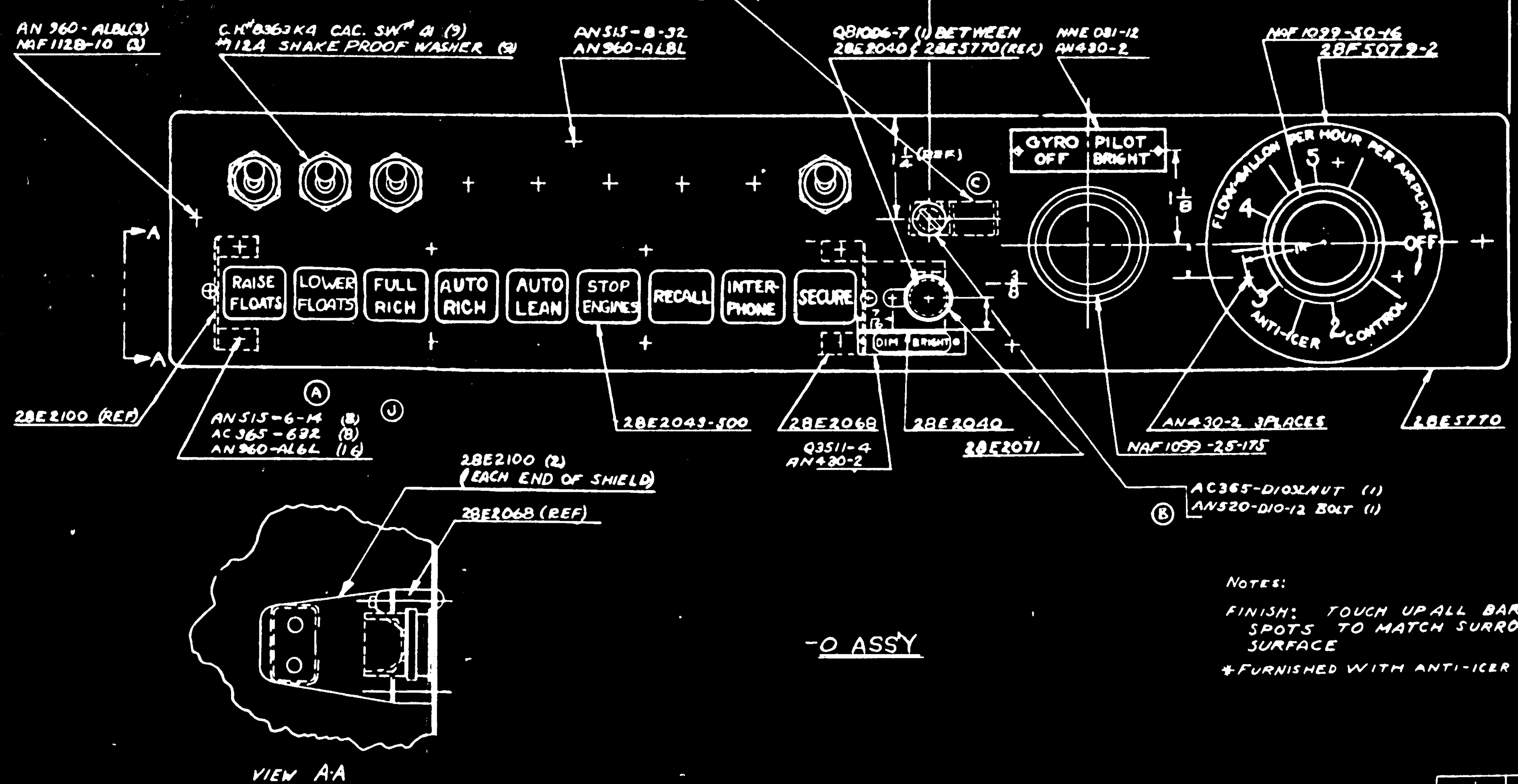

-0 ASSY

NOTES:

FINISH: TOUCH UP ALL BARE SPOTS TO MATCH SURROUNDING SURFACE

* FURNISHED WITH ANTI-ICER EQUIPMENT.

ASSY	WEIGHT
-2	4.11
-3	3.81

MCR 1A
MCR 23-22 TO MCR 1A
MCR 23-22
C. # 88476
91876 #1-346

ASSY DASH NO	MODEL	NEXT ASSY	QTY
-3	PBY-5A	28E2061	1
-2	PBY-5A	28E2061	1
-2	PBY-5	28E2061	1
-0	PBY-5A	28E2061	1
-0	PBY-5	28E2061	1

REQUIREMENTS PER AIRPLANE

PART NO	STOCK	MATERIAL	SPEC	REQ -0	REQ -2	REQ -3	REQ -4	REQ -5
Q7102-AL4					2			
AC372-4					1			
AN515-4-8					1			
AN935-8					4			
AN340-832					4			
AC365-D1032				1	1			
AN520-D10-12				1	1			
Q908-A8-8				1	1			
8363K4	CUTLER HAMMER SWITCH (SW-41)			9	9			
#1124	SHAKE PROOF WASHER			9	9			
28F1061					1			
Q3511-4				1	1			
Q810-06-7				1	1			
NAF1056-17					1			
NAF1099-50-16				1	1			
NAF1099-25-175				1				
NAF1068-20					1			
AC365-832				6	6			
AC365-632				8	8			
AN3014					2			
AN960-AL8L				12	12			
AN960-AL6L				16	16			
AN515-8-20				6	6			
AN515-6-14				8	8			
AN430-2					4			
AN515-8-6				1				
NNE031-12					1			
28E5374					1			
28F5079-2				1	1			
22F046-10				9	9			
28E5770-2					1			
28E5770				1				
28E2100				2	2			
28E2071				1	1			
28E2068				1	1			
28E2055				1	1			
28E2043-500				1	1			
28E2040				1	1			
28E2035				2	2			
28E5771-6	.064 DIA. x10	Soft Tinned Copper Wire		3	3			
-8 SUB ASSY & -10 SUB ASSY								
28E5854						1		
-10	SUB ASSY				1	1		
28E5752-2	(MCR 211-1)				1			
NAF1128-10				3	3	3		
AN960-AL8L				4	4	4		
AN515-8-32				1	1	1		
28E5752-0	(1 TO MCR 211-1)			1				
-8	SUB ASSY			1				

PARTS LIST PER ASSY

REPLACES — NOTED — CALC WT
REPLACED BY — ACT WT
LIMIT ON DIMENSIONS UNLESS OTHERWISE SPECIFIED ±1/32 — SCALE 12" = 1'-0"
STAMP PART NUMBER WHERE SHOWN

ENG. FILE

A.C.		
NAVY NONE	NOTED	Moore
HEAT TREAT	FINISH	DRAFT / CHECK / STRUCT / MAT / APPROV / ENG
NAME Box ASS'Y ~ ELEC ~ PILOTS SIGNAL SYSTEM	OPP HAND NONE	DWG SIZE G — 28E5771
CONSOLIDATED AIRCRAFT CORP. SAN DIEGO CALIF.		

R 28E5771

LET	ALTERATION	DATE	BY
A	REMOVED 28E5812(2) & ADDED 28E5812-8. REARRANGED PNS. NEG. WT CHG.	8-7-42	
B	28E5812(1) WAS 28E5812-8(1). NO WT. CH'G.	10-16-42	E.A.
C	ADDED 28E5869 TO FACE E IN B/M FOR MCR #228. LIMITED 28E6255 FROM LTO MCR #228. WT. CHG. NEG.	11/24/43	

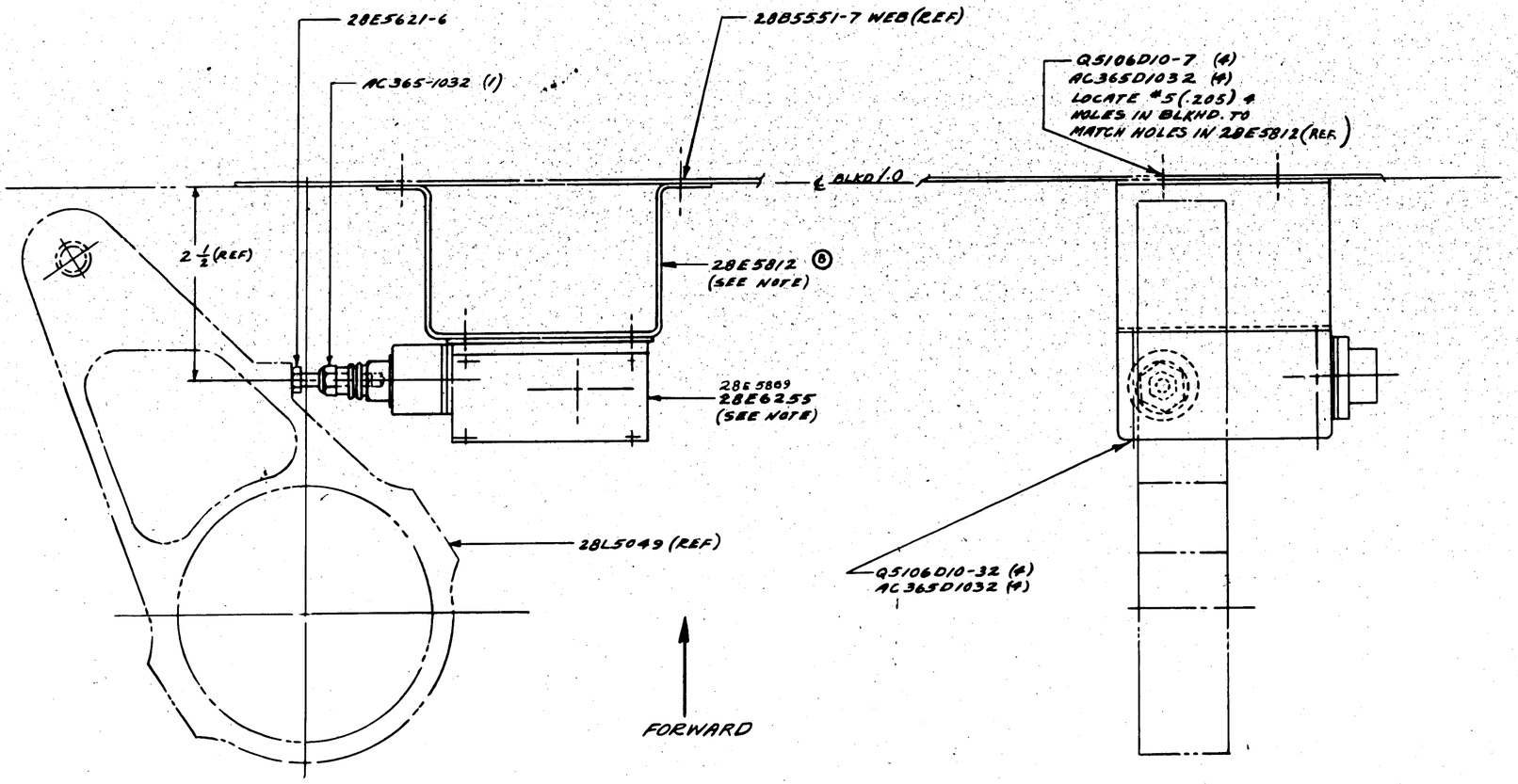

NOTE:-
INSTALL 28E58R (BRACKET) & 28E6255 (SWITCH) ON 28B5551-7 SO THAT SW. PLUNGER IS ACTUATED BY 28L5049 WHEN NOSE WHEEL IS IN DOWN POSITION. OVERTRAVEL OF SW. TO BE NOT MORE THAN 1/16

ASSY DASH NO.	MODEL	NEXT ASSY	REQ.
-0	28-SAMN	28B1011	1
-0	28-SAMC	28B1011	1
-0	PBY-5A	28B1011	1

REQUIREMENTS PER AIRPLANE

REPLACED 28E4531 — SCALE WT

REPLACED BY — ASY. WT.

SCALE 1/32 — 12" = 1'-0"

STAMP PART NUMBER WHERE SHOWN

PART NO.	STOCK	MATERIAL	SPEC	LH REQ -0	RH REQ -2	LH REQ -3	RH REQ -4	LH REQ -5	RH REQ
				Q5106D10-32	Q5106D10-7				
				1	1				
				AC365D1032					
				2					
28E5869	(MCR #2288 ON)			1					
28E6255	(ITO MCR #228)			△					
28E5812				△					
28E5621-6				△					

PARTS LIST PER ASSY.

A C		6/17/42	LAWG	E.J. ASSR	Brg Leg	Brg Leg Pedal	ZUCK
NAVY NONE	NONE	6/21/43	9/1/43	Release			WOLD
HEAT TREAT	FINISH	DRAFT	CHECK	STRUCT	MAT	APPROV	ENG

NAME INSTALLATION-ELEC-NOSE WHEEL SWITCH-DOWN

CONSOLIDATED AIRCRAFT CORP. San Diego, Calif.

OPP HAND

DWG SIZE G

28E5813

6/28

R

LET	ALTERATION	DATE	BY
A	REDRAWN	9-8-42	RMB
B	RELOCATED & CHGD SIZE 58K TO 28E58162 & ADDED (REF) -8(6), QSI06 D10-10 (AC0176) (8) WAS (3) & ACCEPT DWG. (8) WAS (5). NEG WT. CHG.	9-28-42	RMB
C	ADDED STENCILING & NOTES, DETAIL -8 & C'SUNK NOS. ADDED C'SUNK (2) 464 & 5, PARTS MARK, ALSO DIMS. 1, 1/2 TYP & 3/4 TYP, NO INCHG.	8-26-43	Nyjek

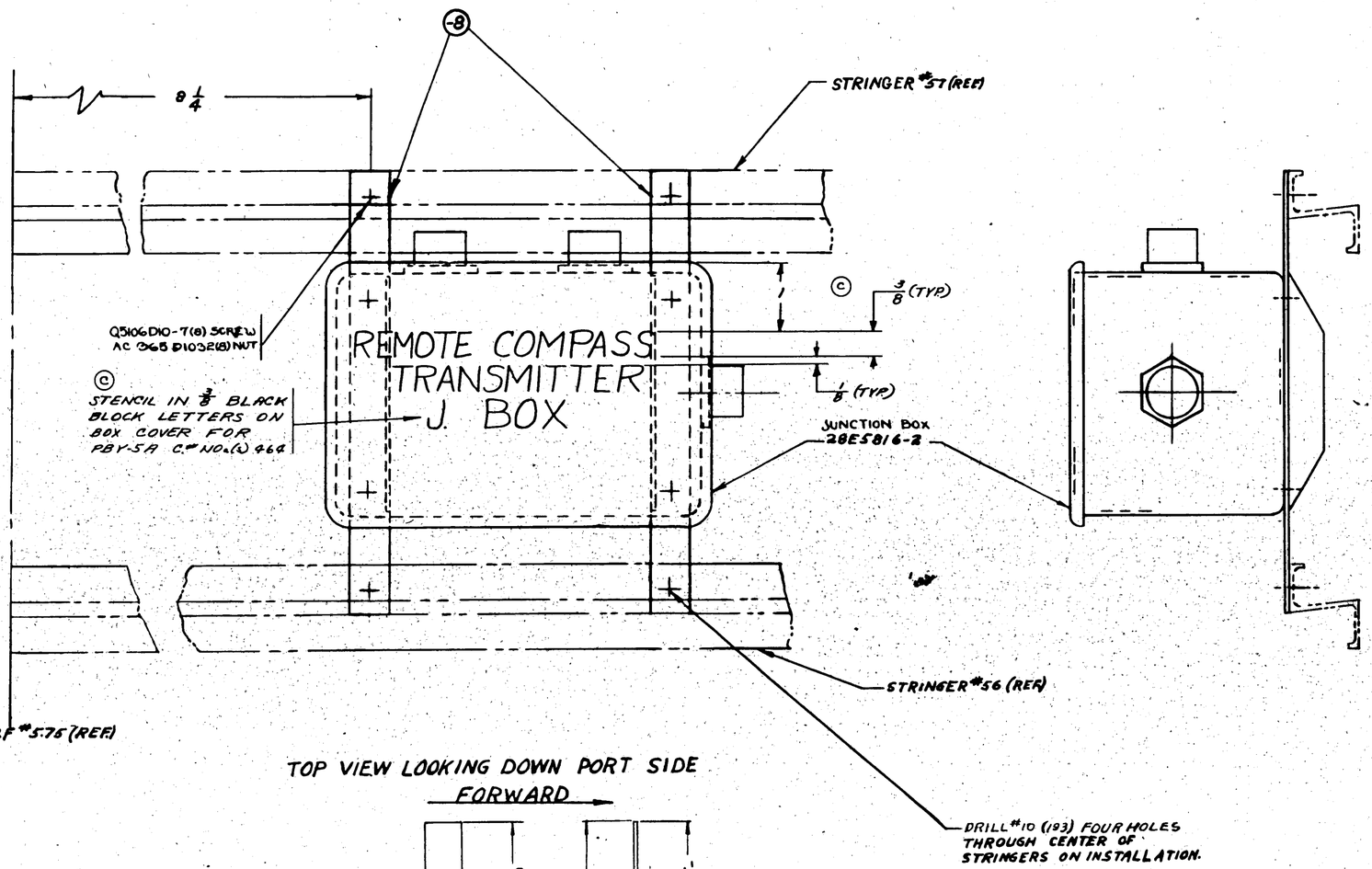
-8
8 1/4
STRINGER #57 (REF)
Q5106D10-7(8) SCREW
AC365 D1032(8) NUT
© STENCIL IN 3/8 BLACK BLOCK LETTERS ON BOX COVER FOR PBY-5A C'SUNK NO.(S) 464
REMOTE COMPASS TRANSMITTER J. BOX
© 3/8 (TYP.)
1/8 (TYP.)
JUNCTION BOX 28E5816-2
STRINGER #56 (REF)
B.F. #5.75 (REF)
DRILL #10 (193) FOUR HOLES THROUGH CENTER OF STRINGERS ON INSTALLATION.

TOP VIEW LOOKING DOWN PORT SIDE

FORWARD →

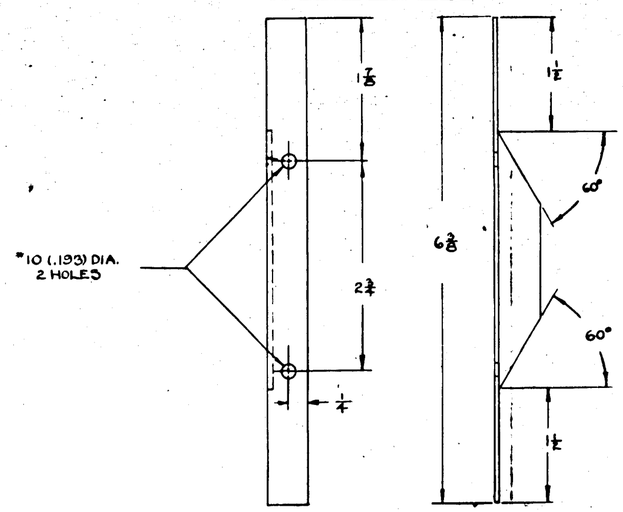

DETAIL -8

C'SUNK NO.(S) 464 & 5 CONTR. 31876

FINISH CODE	
Z	ANODIC TREATMENT
P	P-27 PRIMER
AP	ALUMINIZED PRIMER
C	CADMIUM PLATE

GP-GREEN PRIME

PART No	STOCK	MATERIAL	SPEC	LH REQ -0	RH REQ -2	LH REQ -3	RH REQ -4	LH RE -5	RH REQ -6
	Q5106-D10-7							B	
	AC365-D1032							B	
	28E58162							A	
	28E5817-8	K6240X 6 3/8	AL ALEXT.	16A9-T				A	

PARTS LIST PER ASSY.

-0 PBY-5A 28E5817
-0 PBY-5 28E5817

DASH No.	MODEL	NEXT ASSY	REQ.

REQUIREMENTS PER AIRPLANE

REPLACES 28E5817 OF 6-30-42 CALC. QTY

REPLACED BY ADV. QTY

LIMIT ON DIMENSIONS UNLESS OTHERWISE SPECIFIED 1/32 SCALE 12"=1'0"

STAMP PART NUMBER WHERE SHOWN

A/C NAVY	NONE	ZP-GP							
	HEAT TREAT	FINISH		DRAFT	CHECK	STRUCT	MAT	Stress	DNG

NAME INSTALL-ELEC-INDIC COMPASS JUNCT BOX-LIVING COMPT.

CONSOLIDATED AIRCRAFT CORP. San Diego, Calif.

OPP HAND

DWG G DWG 28E5817

SHT 1 OF 2

R 9-18-

LET	ALTERATION	DATE	BY	APP
A	CREATED -2 ASS'Y FOR PBY-5 & PBY-5A (-88476)			
B	DIMS. 4 9/16 & 5 9/16 WERE 5 1/2 & 4 3/16, REASH WITCH MADE	9-30-42		
C.	REMOVED DIMS 5 3/16 & 4 9/16 ADDED DIM. D. NO WT. CHG.	1-3-43		

E.O. A50816

C.R. 21907 Q

Fwd.

28F5358-R (REF.)

28E5816 (-0 ASS'Y)
28E5816-3 (-2 ASS'Y)

JIG LOCATE #5 (.203) D.3 HOLES IN 28F5358-R TO MATCH HOLES IN 28E5816.
Q5106D10-7 (3)
AC 365-01032 (3)

90°

8

VIEW LOOKING INBOARD
STARBOARD SIDE

-2	PBY-5A	28E5816	1	A.N.C. 4-DW-7
-2	PBY-5	28E5816	1	
-0	PBY-5A	28E5816	1	AC 34-1004-32
ASSY. SAME AS No.	MODEL	NEXT ASSY.	REQ.	

REQUIREMENTS PER AIRPLANE

28E5816-3
28E5816

REPLACES

REPLACED BY

Cond. Sht.

Dist. Sht.

Layout and Engineering Drawings are Standard Engineering Practice

SCALE 1/2 = 1'-0"

STAMP PART NUMBER WHERE SHOWN

PART NO. 28E5816

ORDER

SUPERSEDES

PLANES USED AND WITH

A.C.

NAVY NAVS

HEAT TREAT

NAME INSTALL-ELEC-MISC. CONTROL JUNCT. BOX FAIRED COVER

CONSOLIDATED AIRCRAFT CORP.

28E5816

LET	ALTERATION	DATE	BY	LET	ALTERATION	DATE	BY

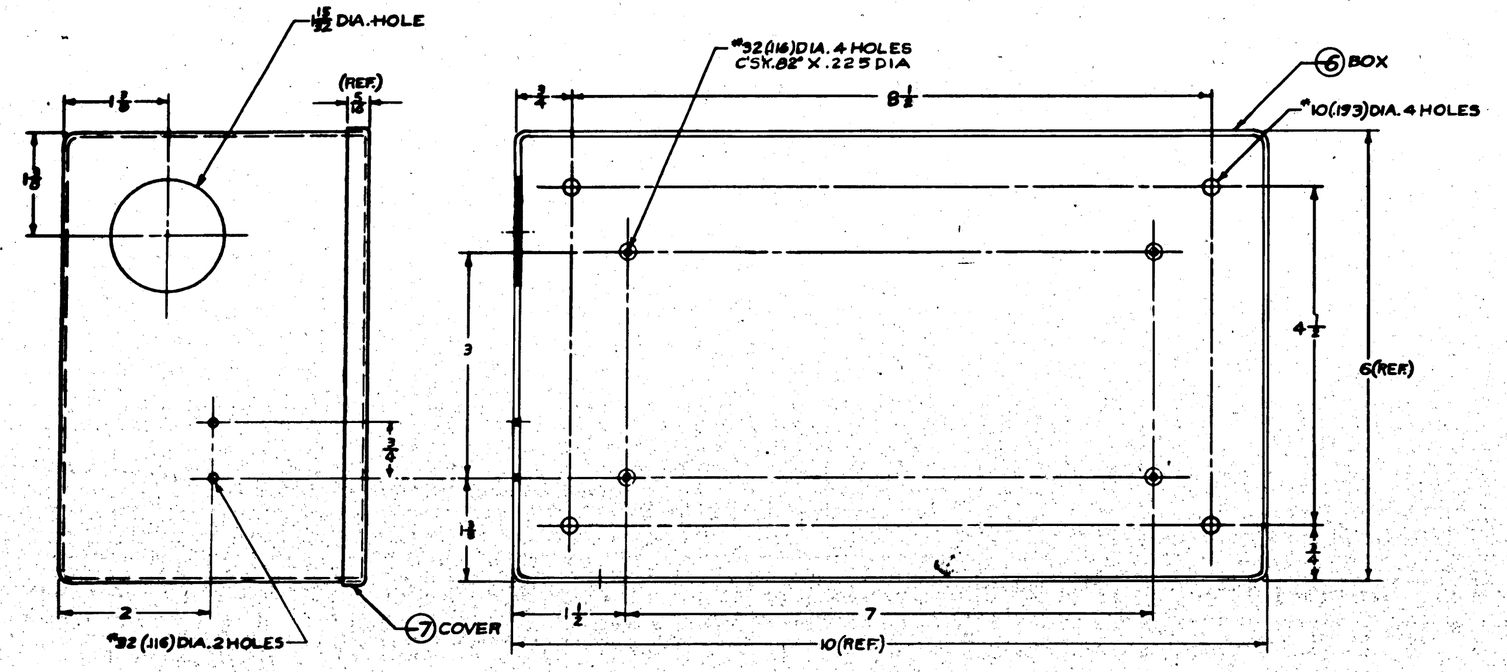

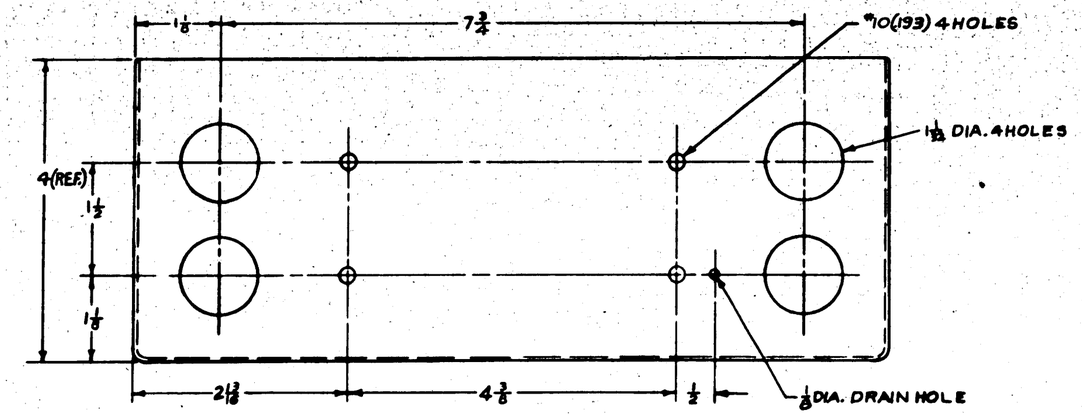

NOTES:-

1. BOX MAY BE PURCHASED FROM EITHER THE FOULSEN & NARDON Co. OR THE MONARCH TOOL Co. SPECIFYING
   P#N #1425-400 BOX
   1425-1 COVER
   MT 1043-400 BOX
   CP1043 COVER
2. REMOVE FINISH 3/32 RADIALLY AROUND CONDUIT HOLES.

CON. MTS 13508
CAC #1644-1-2

APPROVED FOR TOOLING BY
R.B. Humphreys 1-2-43

-2	PBY-5A	CATALINA																	
-4	PBY-5A	CATALINA																	
LAST USED DASH NO.	MODEL	NEXT ASSY																	
REQUIREMENTS PER AIRPLANE																			
REPLACED			37																
REPLACED BY			ASST. QTY.																
LAST ISSUED DRAWING NO. / CHANGED DRAWING	SCALE	12"=1'-0"																	
STAMP PART NUMBER WHERE SHOWN																			

-2 COVER } CAC BOX-41
-4 BOX }

PART NO	STOCK	MATERIAL	SPEC	LH REQ	RH REQ	LH REQ	RH REQ	LH REQ	RH REQ	LH REQ	RH REQ
PARTS LIST FOR ASSY				-0		-2		-3		-4	

A.C. / NAVY / HEAT TREAT

F-MISSING
F-RC-INTERFERE

DATE	2-28-43	1-2-43							
DRAFT	CHECK	STRESS	MAT	APPROV	ENG

NAME
BOX-ELEC-A.C. CONDENSER

CONSOLIDATED AIRCRAFT CORP.

CAC NUMBER
SIZE G
28E5841

R

LTR	ALTERATION	DATE	BY	LTR	ALTERATION	DATE	BY

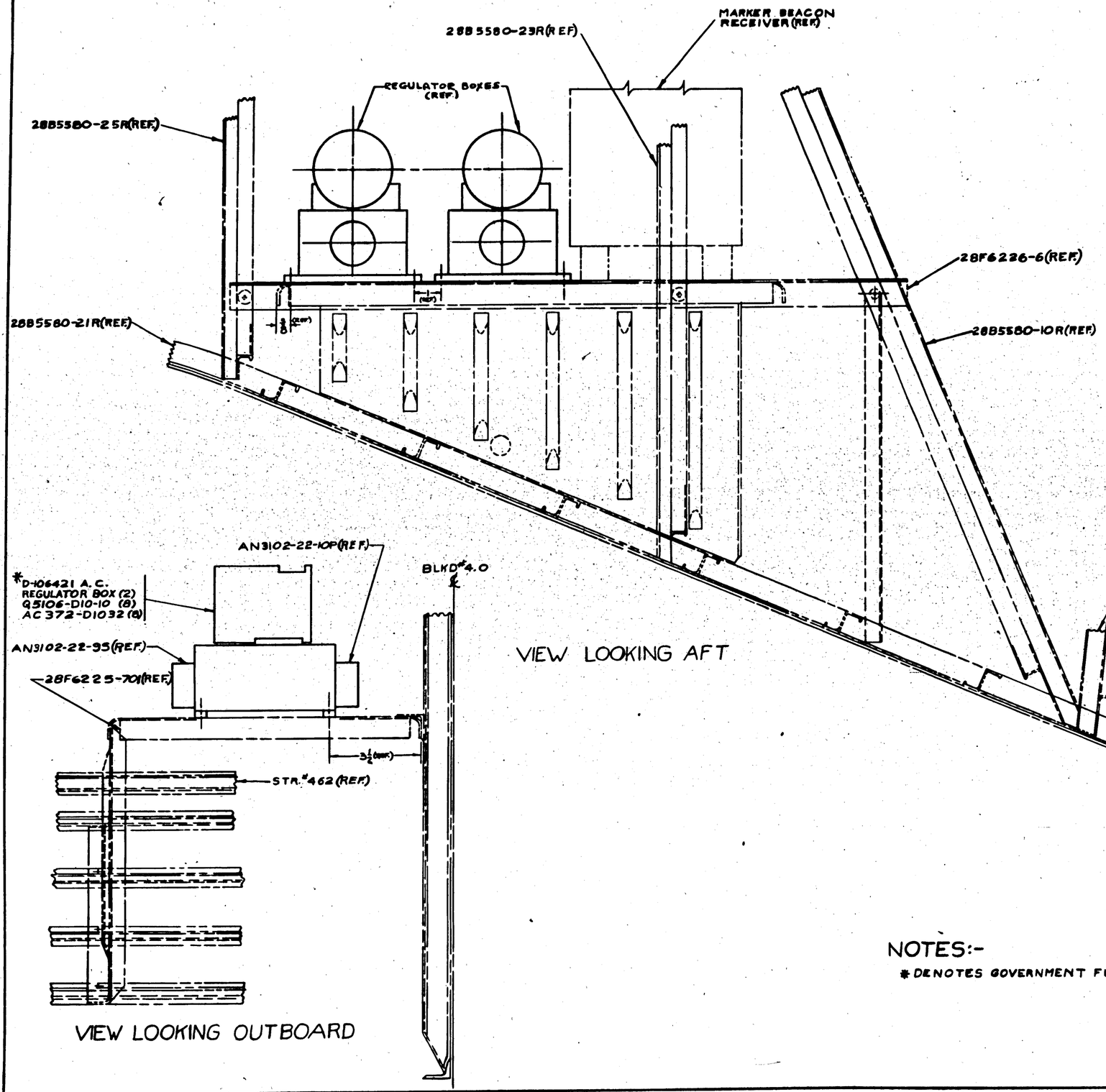

CONT. NYS 13896
CAC #164-1-2

NOTES:-

* DENOTES GOVERNMENT FURNISHED EQUIPMENT

APPROVED FOR TOOLING BY

P.R. Hamilton 1-7-43

PART No	STOCK	MATERIAL	SPEC	LH REQ	RH REQ	LH REQ	RH REQ	LH REQ	RH REQ	LH REQ	RH REQ
PARTS LIST PER ASSY.				-0	-2	-3	-4	-8			

PBY-5A — MODEL
REQUIREMENTS PER AIRPLANE
REPLACES 7.24 Q5106-D10-10, AC372-D1032, D-10642 A.C. REGULATOR BOX
REPLACED BY
SCALE 6"=1'-0"
STAMP PART NUMBER WHERE SHOWN

A C
NAVY
HEAT TREAT — FINISH
DRAFT 2-26-43 — CHECK — STRUCT — MAT — APPROV

NAME INSTALL.-ELEC.-A.C. REGULATOR BOX
CONSOLIDATED AIRCRAFT CORP. San Diego, Calif.
SIZE G — 28E5840

LET	ALTERATION	DATE	BY	LET	ALTERATION	DATE	BY

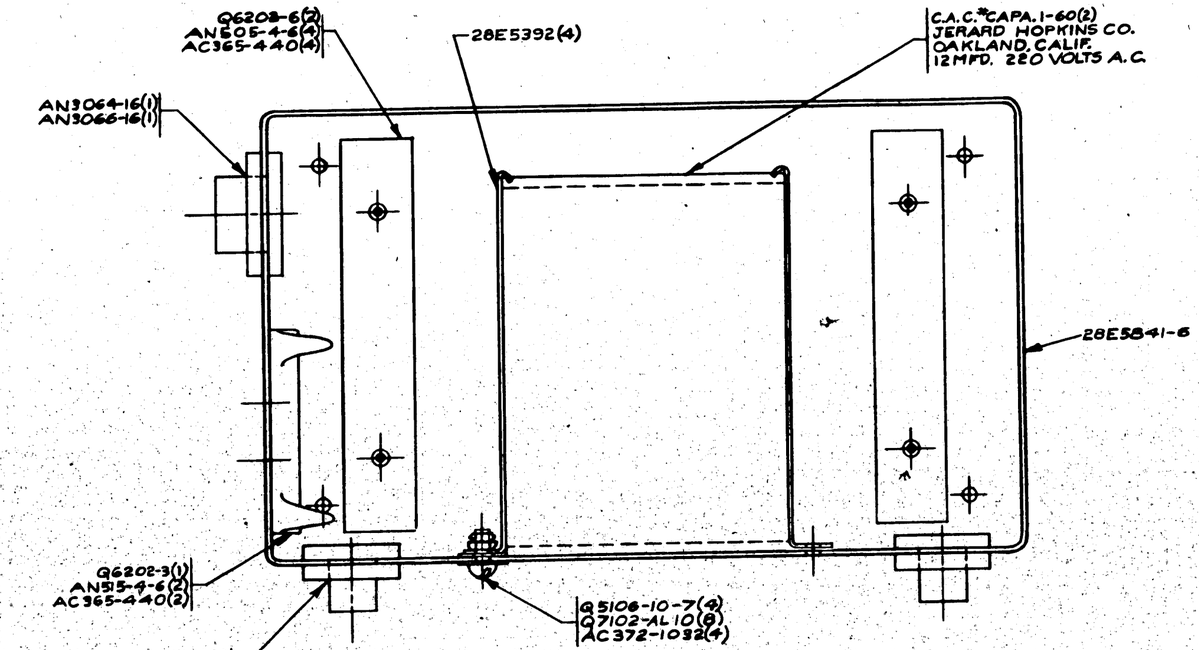

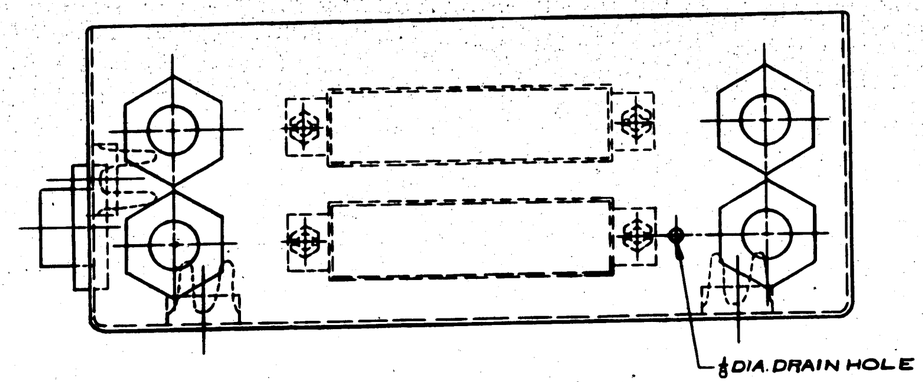

CON. NAS 13595
CAC #164-1-2

APPROVED FOR TOOLING BY
P.A. Humphreys 1-7-43

PART No	STOCK	MATERIAL	SPEC.	LH REQ.	RH REQ.	LH REQ.	RH REQ.	LH REQ.	RH REQ.	LH REQ.	RH REQ.
				-0		-2		-3		-4	-5
Q7102-AL10										8	
Q5108-10-7										4	
Q6208-6										4	
Q6202-3										1	
AC372-1032										4	
AC365-440										6	
AN515-4-6										2	
AN505-4-6										4	
AN3064-16										1	
AN3066-16										1	
AN3064-10										4	
AN3066-10										4	
28E5392										4	
C.A.C.-CAPA.1-60										2	
28E5841-6										1	

PARTS LIST PER ASSY.

A C				4/5/43	4/6/43	
NAVY				4/5/43	4/6/43	4-9-43
HEAT TREAT	FINISH			DRAFT	CHECK	STRUCT

LOFT LAY-OUT No.	MODEL	NEXT ASSY.	QUAN.
	PBY-5A	28E5845	1

REQUIREMENTS PER AIRPLANE

REPLACES	2.1 Empty Wt.
REPLACED BY	Act. Wt.
LOFT OR DRAWING NO.	SCALE 12"=1'-0"

STAMP PART NUMBER WHERE SHOWN

NAME: Box Assy.-Elec.-A.C. Condenser

CONSOLIDATED AIRCRAFT CORP. San Diego, Calif.

OPP. HAND | DWG. G | SIZE 28E5842

R

LET	ALTERATION	DATE	BY	LET	ALTERATION	DATE	BY

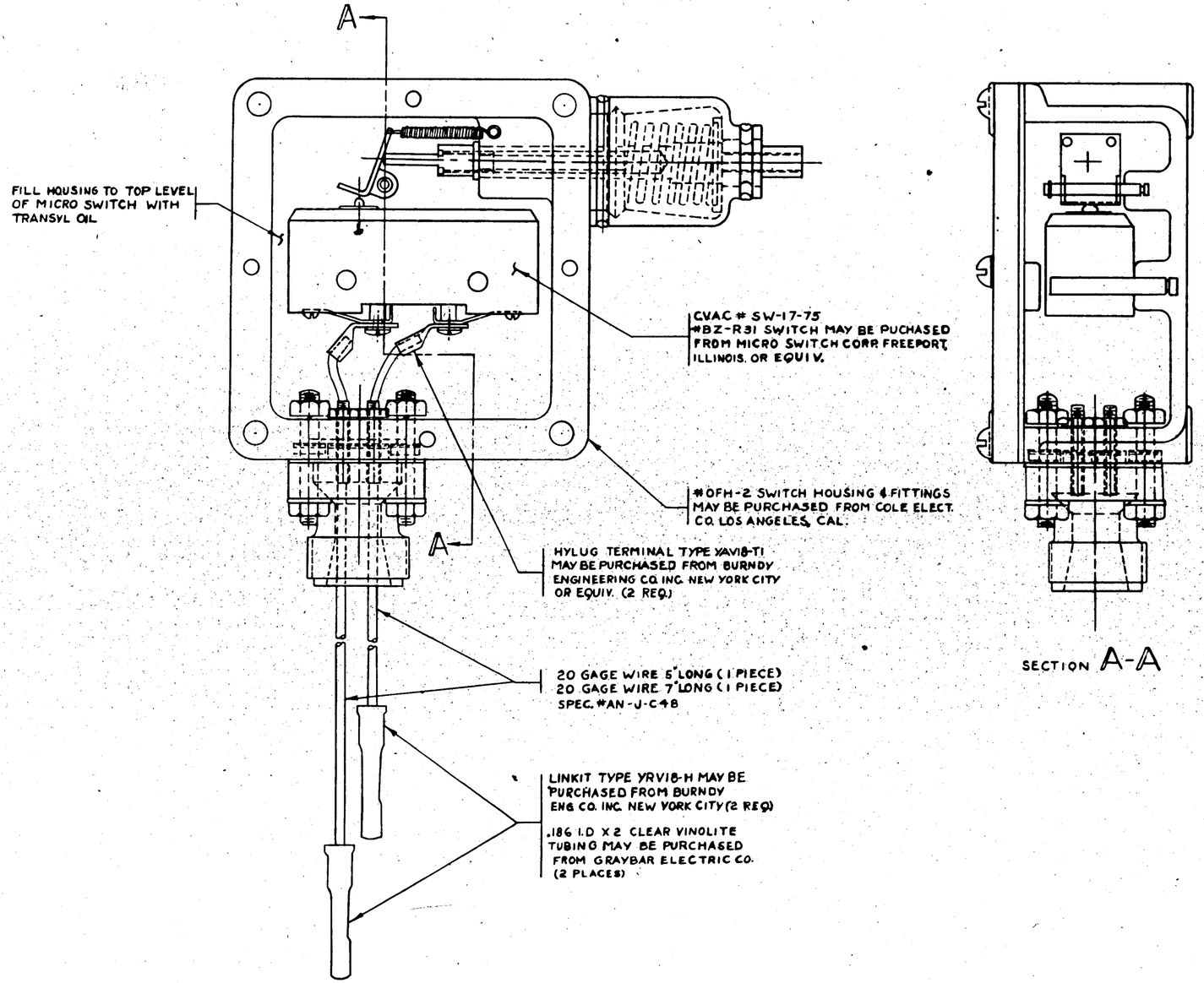
A
A
FILL HOUSING TO TOP LEVEL OF MICRO SWITCH WITH TRANSYL OIL
CVAC # SW-17-75
#BZ-R31 SWITCH MAY BE PUCHASED FROM MICRO SWITCH CORP FREEPORT, ILLINOIS. OR EQUIV.
#OFH-2 SWITCH HOUSING & FITTINGS MAY BE PURCHASED FROM COLE ELECT. CO. LOS ANGELES, CAL.
HYLUG TERMINAL TYPE YAV18-T1 MAY BE PURCHASED FROM BURNDY ENGINEERING CO. INC. NEW YORK CITY OR EQUIV. (2 REQ.)
20 GAGE WIRE 5" LONG (1 PIECE)
20 GAGE WIRE 7" LONG (1 PIECE)
SPEC. #AN-J-C48
LINKIT TYPE YRV18-H MAY BE PURCHASED FROM BURNDY ENG CO. INC. NEW YORK CITY (2 REQ)
.186 I.D X 2 CLEAR VINOLITE TUBING MAY BE PURCHASED FROM GRAYBAR ELECTRIC CO. (2 PLACES)

VIEW WITH COVER REMOVED

SECTION A-A

PURCHASE TO DWG

PART NO	STOCK	MATERIAL	SPEC	LH REQ -0	RH REQ -2	LH REQ -3	RH REQ -4	LH REQ -5	RH REQ
		TRANSYL	OIL						
		CVAC#SW-17-75 MICRO SWITCH CORP#	BZ-R31 SWITCH	1					
		VINOLITE	TUBING .186 I.D.X.4	1					
		20 GAGE	WIRE 12" LONG	AN-J-C-48	1				
		YRV18-H	LINKIT	BURNDY ENG CO INC	3				
		YAV18-T1	TERMINAL	BURNDY ENG CO INC	2				
		OFH-2	HOUSING	COLE ELEC CO	1				

PARTS LIST PER ASSY.

ASSY SHOWN ON DWG NO.	MODEL	NEXT ASSY	REQ'D
-0	PBY-5A	28E5813	1
-0	PBY-5A	28E6622	1
-0	PBY-5A	28E3628	2
-0	PBY-5A	28E3604	2

REQUIREMENTS PER AIRPLANE

REPLACES 28E6285 .61 CALC. WT

REPLACED BY ACT. WT

LIST OF BLUEPRINTS SPLICED: DRAWING #1 thru #10

SCALE 24"=1'-0"

STAMP PART NUMBER WHERE SHOWN

MCR#22860N

COMPLETE ASSY. MAY BE PURCHASED FROM COLE ELECTRIC LOS ANGELES, CAL.

APPROVED FOR TOOLING BY Gorsline 8-16-43

A.C.		8-17-43			
NAVY NONE	NONE	LEESE			
HEAT TREAT	FINISH	DRAFT	CHECK	STRUCT	MATL

NAME HOUSING ASSY.- ELEC- MICRO SWITCH

CONSOLIDATED AIRCRAFT CORP. SAN DIEGO, CALIF.

OPP. HAND

DWG. G

DWG. 28E5869

R 6985782

LET	ALTERATION	DATE	BY	LET	ALTERATION	DATE	BY
	6'9" 29'7" WERE 3'6, 3'6" 7'56			A	REVISED (REDRAWN)		
					ADDED -2 ASSY & -3 ASSY		
	3'6" 7'7" 25'5" 9'1" 25 RESPT.			B	WIRES 987, 988, 993, 994 (999) WERE		
H	WIRE #379 WAS 397				449, 450, 455		
	NO WT. CHG			C	REMOVED -2 ASSY & ADDED -4 ASSY		
					ADD ... AND REVISED		
					... -3 ASSY ...		
					FOR ...		
				D	REV ... & ADDED		
					WIRES 1050 (1051) ...		
				E	CREATED -5 ASSY ON DRG &		
					IN ... CHG LIMITS ON -3 ASSY		
					91-345 WAS 91-260 & ADDED		
					NOTE WIRE ...		
					NOTIFIED ... WT CHG		
				F	CHG WIRE GUAGES ...		
					WAS ...		
					1050 ... WAS 18 NO WT CHG		
				G	CHG WIRE LENGTHS 29'7", 29'7", 5'9"		
					29'7", 29'7", 5'9", 4'6", 7'10", 7'10", 4'6"		
					1'8", 2'10½", 1'6½", 1'2½", 29'7", 6'9"		
					6'9", 29'7", 3'8", 3'8", 29'7", 29'7"		

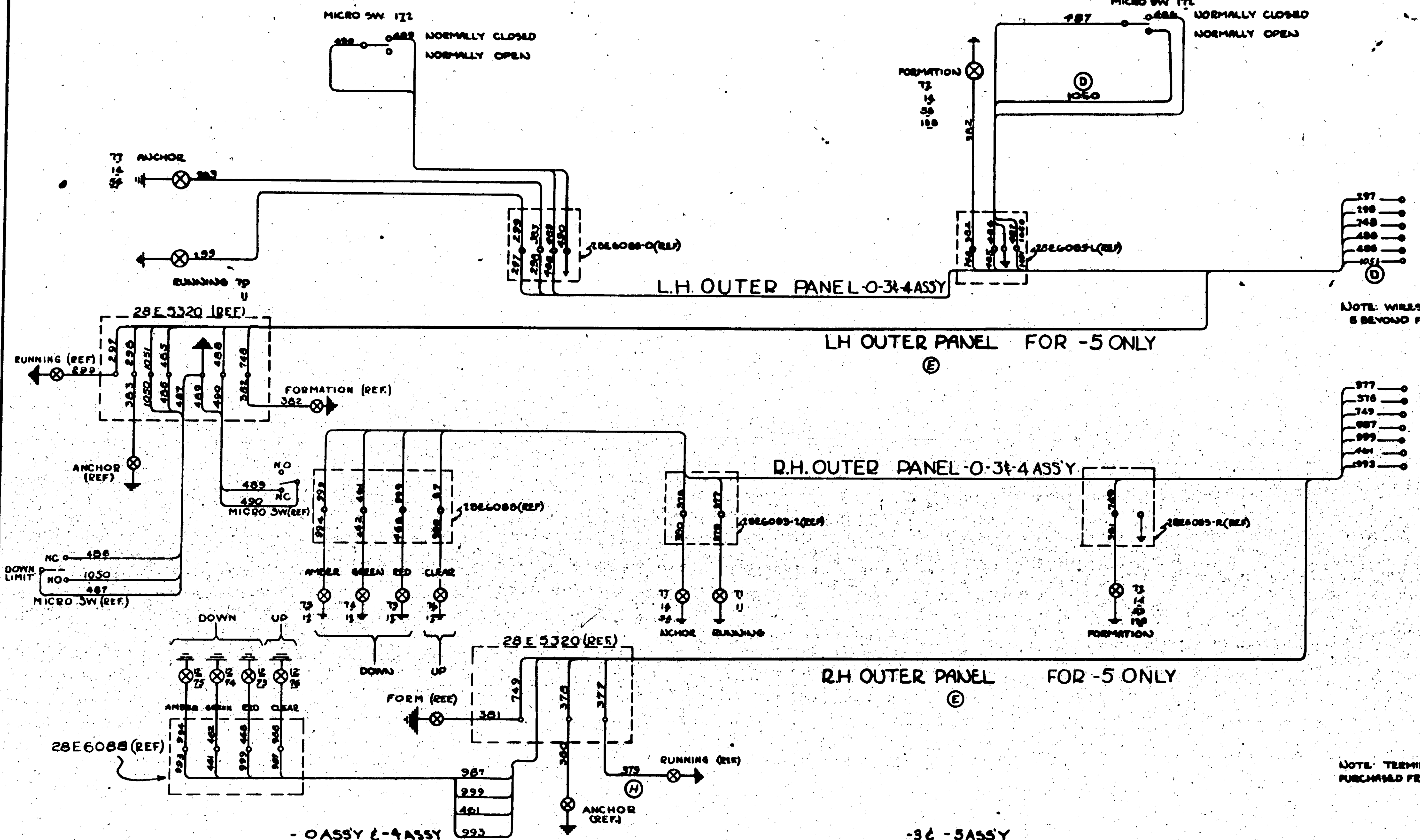

WIRE TABLE		
NO	SIZE	LENGTH FT
297	20	29'7"
298	20	29'7"
299	20	5'9"
377	20	29'7"
378	20	29'7"
379	20	5'9"
380	20	4'6"
381	20	7'10"
382	20	7'10"
383	20	4'6"
+ 987	20	35
+ 988	20	1'8"
+ 993	20	35
+ 994	20	2'10½
+ 461	20	35
+ 462	20	1'6½
+ 999	20	36
+ 468	20	1'2½
485	18	29'7"
486	20	6'9"
487	20	6'9"
488	18	29'7"
489	20	3'8"
490	20	3'8"
748	20	29'7"
749	20	29'7"
1050	20	6'9"
1051	18	29'7"

NOTE: + OMIT THESE WIRES ON -4 ASSY. FOR 28-5AMN

Ⓔ * WIRE LENGTHS FOR -5 ASSY TO BE DETERMINED ON FIRST SHIP & ENG. DEPT NOTIFIED

NOTE: TERMINALS & INSUL. SLEEVE MAY BE PURCHASED FROM BURNDY ENG. Co INC. NY. NY.

- 0 ASSY & - 4 ASSY

EQUIPMENT TABLE

No.	ITEM	MFG.	TYPE	DRG	REQ'D
70	RUNNING LIGHT	GRIMES MFG. Co.	H-2	NAF1021-1	1
71	RUNNING "	"	H-2	NAF1021-2	1
72	FORM. "	"	GF-3	NAF1023-15	2
77	ANCHOR "	"	H-2	NAF1023-15	2
+ 76	RECG. "	"	E	B-2115 CLEAR	1
+ 73	RECG "	"	E	B-2389 RED	1
+ 74	RECG. "	"	E	B-2389 GREEN	1
+ 75	RECG LIGHT	GRIMES MFG Co	E	B-2389 AMBER	1
172	FLOAT SW	MICRO SW. Co	BZR		2
11	RUNNING BULB	GEN. ELEC. Co	3-B	NAF1068-19	2
14	ANCHOR-FORM. BULB	"	G-6	NAF1068-17	4
+ 12	RECG. BULB	"	RP-11		4
53	GLOBE			NAF1023-19	2
54	GLOBE			NAF1023-26	2
138	REFLECTOR			NAF1023-16	2

+ ITEMS OMITTED ON -4 ASSY ONLY

-3 & -5 ASS'Y

GOV'T FURN.

No.	ITEM	MFG.	TYPE	DRG	REQ'D
70	RUNNING LIGHT	GRIMES MFG. Co.	H-2	NAF1021-1	1
71	RUNNING	"	H-2	NAF1021-2	1
72	FORM	"	GF-3	NAF1023-15	2
77	ANCHOR	"	H-2	NAF1023-15	2
11	RUNG LIGHT BULB	GEN ELEC.	3-B	NAF1068-19	2
14	ANCHOR-FORM BULB		G-6	NAF1068-17	4
53	GLOBE			NAF 1023-19	2
54	GLOBE			NAF 1023-26	2
138	REFLECTOR			NAF 1023-16	2

CONT'R FURN.

No.	ITEM	MFG.	TYPE	DRG	REQ'D
12	RECG. BULB	GEN ELEC.	RP-11		4
76	RECG. LIGHT	GRIMES	E	B-2115 CLEAR	1
73	RECG. "	"	E	B-2389 RED	1
74	RECG. "	"	E	B-2389 GREEN	1
75	RECG LIGHT	"	E	B-2389 AMBER	1
172	FLOAT SW	MICRO SW. Co.	BZR		2

PARTS FURN BY BREWSTER

C# 91876 #34610 CONTRACT 88476-28800 91876-91-345

ASSY DASH No.	MODEL	NEXT ASSY	REQ
-5	PBY-5	28E5050	1
-4	28-5AMN	28E5050	1
-3	PBY-5A	28E5050	1
-3	PBY-5	28E5050	1
-0	PBY-5B	28E6021	1

REQUIREMENTS PER AIRPLANE

REPLACES 28E6040 — REPLACED BY — STAMP PART NUMBER WHERE SHOWN

PART No	STOCK	MATERIAL	SPEC	-0	-2	-3	-4	-5
BURNDY INSUL. SLEEVE TYPE C-14				36		16	36	24
BURNDY TERMINAL BARC. H-6				36		24	32	24
		A4-MCM-10		10		10	7	10
WIRE - AS NOTED			AN-C-48	-	-	-	-	-

PARTS LIST PER ASSY

NAME WIRING DIAGRAM - ELEC - OUTER WING PANEL

CONSOLIDATED AIRCRAFT CORP. San Diego Calif.

G 28E6040

LET	ALTERATION	DATE	BY
J	CHG'D LOCATION OF 28E6054-6(2) & 28E6054-7(1) ADDED PART NOS. ON A.I. WT CHG. NEG.	11/5/42	[illegible]
K	ADDED ON DWG FOR -2 ASS'Y-28E5377(1) & NOTE "SHELLAC 28E5377 - FOR -2 ASS'Y." WT CHG. NEG.	11/16/42	BRANDON
L	RELOCATED 28E5835-6 AN-3 ASS'Y & 28E5372 AN-2 ASS'Y. NO WT CHG.	2-1-43	WINTER
M	ADDED NOTE "APPLY TO-SHELLAC" WT. CHG. NEG.	2-1-43	WINTER
P	28E6054-6(1) FOR -2&-3 ASS'YS WAS 28E6056-6(1). No WT CHG	6/16/43	VALIN
Q	FOR PBY5A C-NO.(5)464 28E5377 WAS 28F5835-6, TO NOTE 2 ADDED & -3 ASS'Y WT.CHG. NEG.	8-11-43	CALDWELL

LET	ALTERATION	DATE	BY
A	CREATED -2 & -3 ASS'Y (INCL. WT CHG)	[illegible]	[illegible]
B	CHG AN931-8-13 (WAS 13) ADDED AN520 10-8R (WAS 8), CHG AC365-1032 (WAS 2) AN935 10L (WAS 1) AN345-1032 (WAS 1) & AC365-1032 (WAS 1) ADD 8 ADD'L -2 ASS'Y AC365-1040 (1) CHG AC366F-632 (WAS 2) TO WITH AN3F-6-516 AN425 AD7 (4) & AC366F-632 (1) (WAS 1) (INCL. WT CHG.)	5-6-43	[illegible]
C	ADDED 28E6054 IN B/M & NOTE "SHELLAC---SHELLAC" NEG. WT CHG	6-5-43	EMR
D	AN931-8-13 (REQ WAS 4) NEG. WT. CHG.	8-3-43	EMR
E	IN B/M ADDED (1) AN3066-16 REMOVED (1) AN 3064-16 NO. WT. CHG	7-7-43	CLARK
F	ADDED 28E5835-6(1) FOR -3 ASSY. NO WT. CHG.	9/4/43	FUNK
G	AN520-10-7R(2) WAS -10-8(2). WT CHG. NEG.	9/16/43	FUNK
H	AN 3064-4(2 WAS 1) (AN3066-4(2WAS 1) IN -2 ASSY. NEG WT CHG.	11/18/43	BRANDON

E.O.A 3100

E.O.A 3100 & E.O.A 31001

E.O. A97438

E.O. A 98825

E.O. A 98717

E.O. A43029

E.O. A 50836

E.O.A 74943

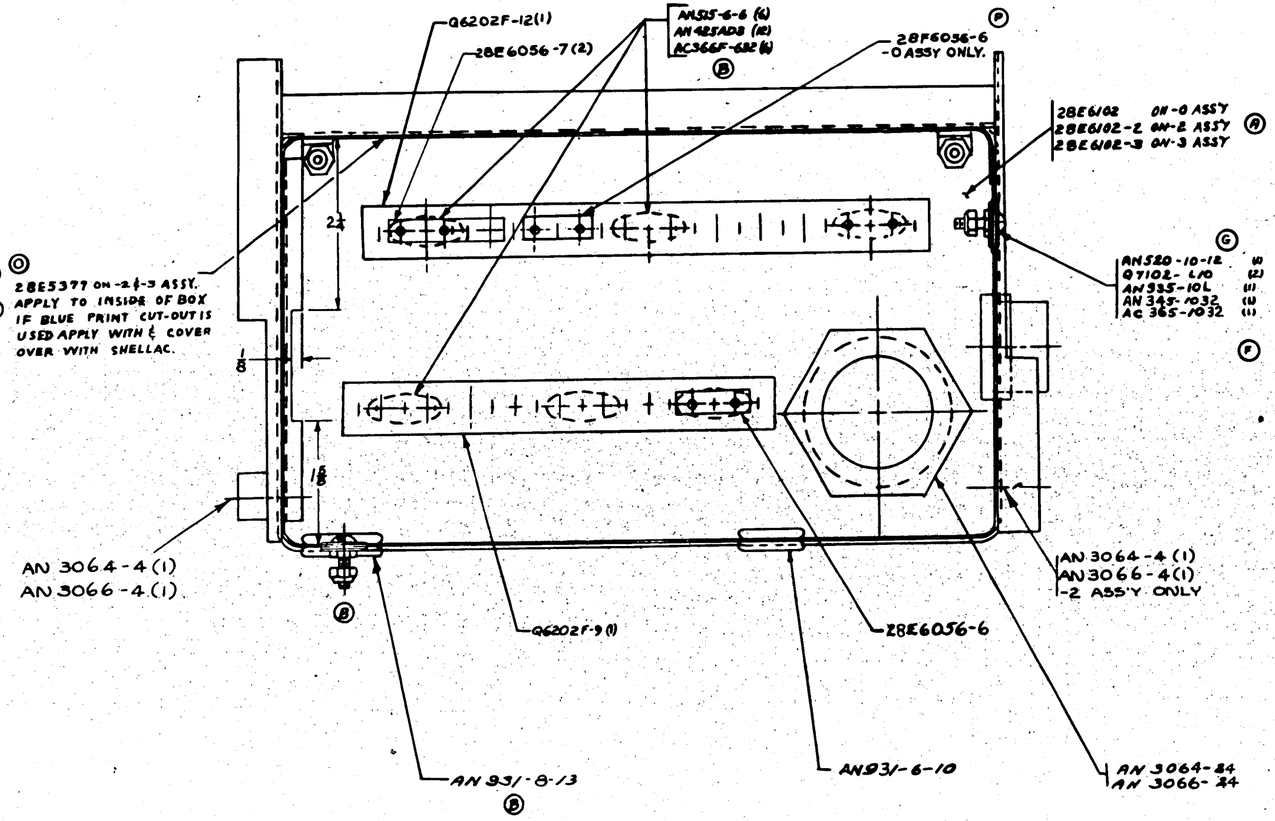

NOTE:
1.- SHELLAC 28E6315 TO TOP SIDE OF BOX 28E6102 & COVER OVER WITH SHELLAC FOR -0 ASS'Y.

2.- SHELLAC 28E5377 TO BACK OF MECH'S SW. BOX AND COVER WITH SHELLAC-FOR -2 ASS'Y. & -3 ASS'Y.

C

C-88476 #53 & ON
C-91876 #91 & ON

-3	PBY-5AMN	28F2136	1
-3	PBY-5A	28F2136	1
-2	PBY-5	28F2136	1
-0	PBY-5B	28F5555	1

ASSY DASH NO.	MODEL	NEXT ASSY	REQ.

REQUIREMENTS PER AIRPLANE

REPLACED

REPLACED BY

SCALE 12" = 1'-0"

STAMP PART NUMBER WHERE SHOWN

28E 3377	C-91876 #91 & ON E C NO. (5) 464
AN3064-10	
AN3066-10	
AN3066-16	
AN3064-16	
28E6315	
28E6102-3	
28E6102-2	
28E5835-6	C-88476 #53 TO CNDA(5) 464
AN345-1032	
AC365-1032	
AN520-10-12	
AN935-10L	
Q7102 ALID	
AC366F-632	
Q6202F-12	
Q6202F-9	
AN3066-24	
AN3066-12	
AN3064-4	
AN3064-24	
AN3064-12	
AN3064-9	
AN931-6-10	
AN931-8-13	
AN515-6-6	
AN425AD3	
28E6056-7	
28E6056-6	
28E6102	

PART No	STOCK	MATERIAL	SPEC	LH RH REQ -0	LH RH REQ -2	LH RH REQ -3	LH RH REQ -4	LH RH REQ -5
				6 6 12	1 1 2	1 1 2	2 2 4	3 3 6

PARTS LIST PER ASSY.

AC
NAVY NONE
HEAT TREAT
NONE
FINISH

DRAFT CHECK STRUCT MAT'L ENGR. ENG

NAME BOX ASSY-ELEC-MECH. SWITCH PANEL

OPP HAND

SIZE G

28E6051

CONSOLIDATED AIRCRAFT CORP. SAN DIEGO, CALIF.

R

28E6051

LET	ALTERATION	DATE	BY
	ADDED 28E1133-50 & 28E1133-1		
	FOR -0 ASSY PAY-3 & 5		
	A ASSY. PAY-5 #9160N MEG WT CHG	7/24/43	HEAVEN
J	ADDED -XAF1068-20 NOTE		
	XAF1068-2(0) FOR -2 ASSY		
	WT CHG NEG.	11/43	WHITE
A	RELOCATED 28E1134 & ADDED		
	SAME TO -3 ASSY REVISED		
	LOCATION OF #A2328		
	GRIMES LIGHT NO WT CHG	11/43	HOWELL
L	ADDED AN3028-2(2) TO DIA		
	NIL SWITCHES & ELM. FOR -2 ASSY.		
	M.C.R. 318 ADDED CALC WITH NEGATIVE TCHG	3-43	DOONEY
M	ON FACE OF DWG. & BOM FOR -2 ASSY		
	ADDED 28E3013 (1) AN 318-8-6 (2),		
	AN340-8 (2) & AN 935-8 (2). LIMITED		
	28E5187-6 (WAS 28E5187) UP TO		
	MCR #260. ADDED 28E5187-7 FOR		
	MCR #260. LIMITED 28E6053-0		
	(WAS 28E6053) UP TO MCR 260.		
	ADDED 28E6053-2 FOR MCR 260		
	WT CHG NEG.	6-3-43	HEAVEN
N	ON FACE OF DWG & BOM REMOVED		
	NAF1068-2(0) REQ FOR -2 ASSY.		
	WT CHG NEG	6-3-43	HEAVEN

LET	ALTERATION	DATE	BY
H	CREATED -2 ASSY.	7/20/42	HEAVEN
B	CREATED -3 ASSY ADDED		
	28E5801, 28E5802 &		
	28E2043, SOON REVISED		
	NOT FOR USE -2 ASSY	10/24/42	HEAVEN
C	"A-2328 LIGHT (CRAIL-M-50)		
D	REMOUNTED SCREWS.		
	ATTACHING FLOAT WARNING		
	LT. ADDED VIEW C C NO WT CHG	11/42	HEAVEN
E	ADDED NAF1068-10 &		
	NAF1068-20 WT CHG NEG.	7/24/43	HEAVEN
F	REMOVED AN 4-30 & ADDED		
	Q4305-AD2, ADDED Q3511-4		
	FOR -0 & 2 ASSYS & Q3511-4N		
	FOR -3 ASSY WT CHG NEG.	11/42	HEAVEN
G	REMOVED AN505-8-6(6)		
	AN515-8-6(6) AN340-8(6)		
	AN935-8(6) ADDED 28E5187-6		
	AN335-8-3 ADDED CAC SW-43		
	-85(1) WAS AN3018 SW # "1124		
	ADDED 28E6053-2 FOR MCR 260		
	SHAKEPROOF LOCKWSHR		
	28E1133-65 BUS(1) WT CHG NEG.	7/24/43	HEAVEN

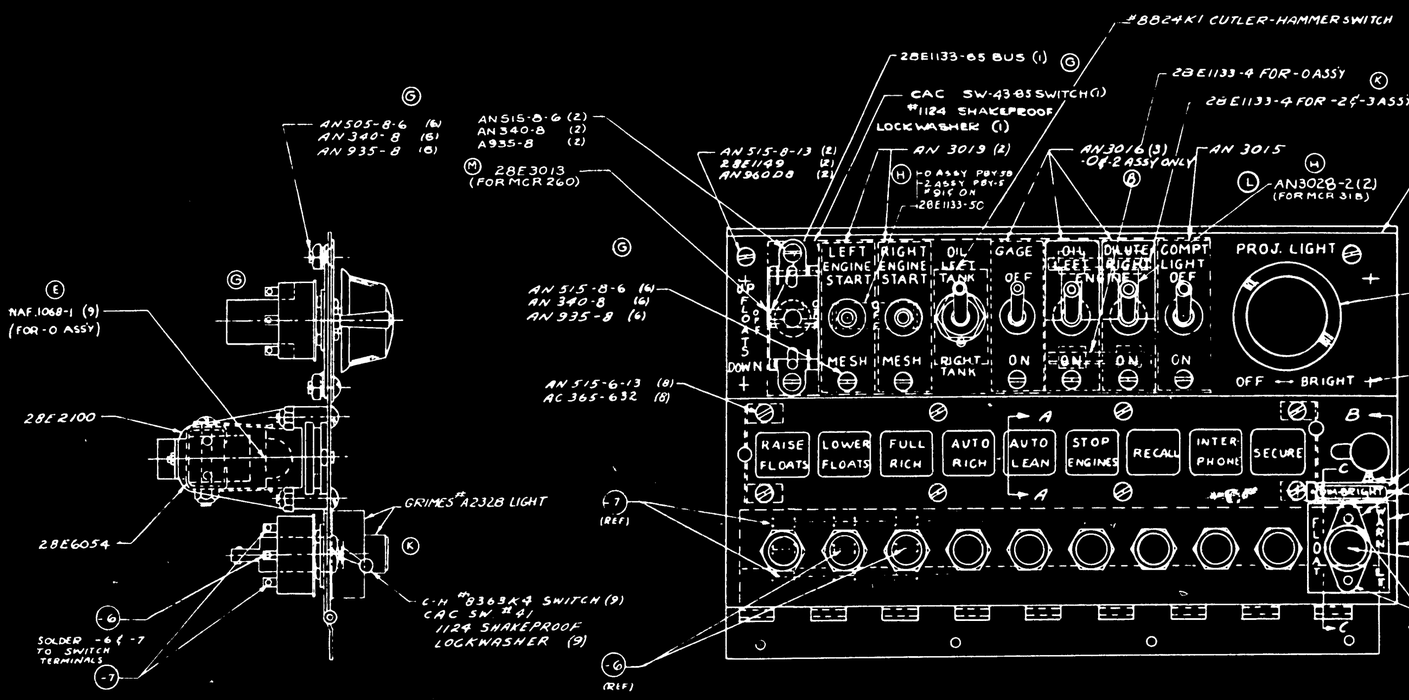

NOTE -

GRIMES #2328 LIGHT MAY BE PURCHASED FROM THE GRIMES MFG. CO. URBANA, OHIO.

CAC SW43-85, #8824K1 CAL "#1 SWITCHES MAY BE PURCHASED FROM CUTLER-HAMMER INC. MILWAUKEE, WISC

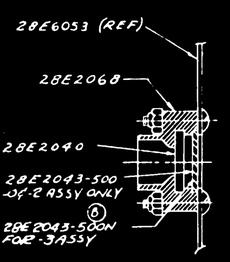

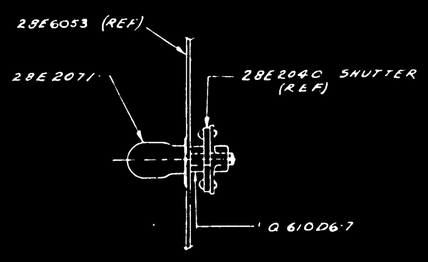

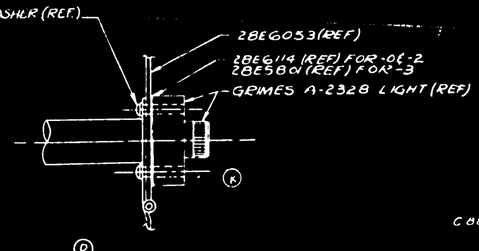

C 88476 53 FON & NO. (3) ACG 31 FON C-91876

(L) CALC WT.
-0 ASSY 1.41#
-2 ASSY 1.31#
-3 ASS'Y 1.28#

28E6053-2 (MCR 260)			
28E3013 (FOR MCR 260)			
AN3028-2 (FOR MCR 318)			
28E5187-7 (MCR 260)			
28E1133-30 BUS PAY-3 & PAY-5 A 9 FON	1		
28E1133-4 BUS	1	1	1
CAC #SW-43-85 (C-H #8020 K1)	1	1	1
NAF1068-1	9		
NAF1068-20	1	1	
28E2043 SOON			
28E5802			
28E5801			
Q61006-7			
A 2328 LIGHT CRAIL-M-50	1	1	1
#1124 SHAKEPROOF	10	10	10
#8824K1 CUTLER HAMMER	1	1	1
#8363K4 C-H CAC #41 SW	9	9	9
NAF1089-25-250	1		
Q3511-4N	1		
AN3019	2	2	2
28E1133-65 BUS	1	1	
AN3016	3	3	
AN3015	1	1	
Q3511-4	1		1
Q4305AD2	6	2	4
AN335-8	12	14	8
AN515-8-6	6	8	4
AN515-8-13	2	2	2
AN515-6-13	8	8	
AN505-8-6	6	4	2
Q4304AD2	2		2
AC365-632	8	8	
AN340-8	12	14	8
28E5187-6 (UP TO MCR 260)			
28E6114			
28E6055			
28E6054			
28E6053-0 (UP TO MCR 260)			
28E1149			
28E2100			
28E2071			
28E2068			
28E2043-500			
28E2040			
-7 .064 x 9/16	2	2	2
-6 .064 x 3/4	9	9	9

PART NO.	ST. CR.	MATERIAL	SPEC	REQ -0	REQ -2	REQ -3	REQ -4	REQ -5
PARTS LIST PER PART								

-2	PAY-5A	28E5005	
-2	PAY-5	28E5005	
-3	2B-5AMN	28E5336	
-0	PAY-5B	28E5556	
DASH NO.	MODEL	NEXT ASSY	REQ

REQUIREMENTS PER AIRPLANE

NOTED

SCALE 12" = 1'-0"

STAMP UNIT NUMBER WHERE SHOWN

NONE NOTED

NAME PANEL ASSEMBLY-ELEC MECH'S SWITCH

CONSOLIDATED AIRCRAFT CORP.

G 28E6052

ENG. FILE

28E6052

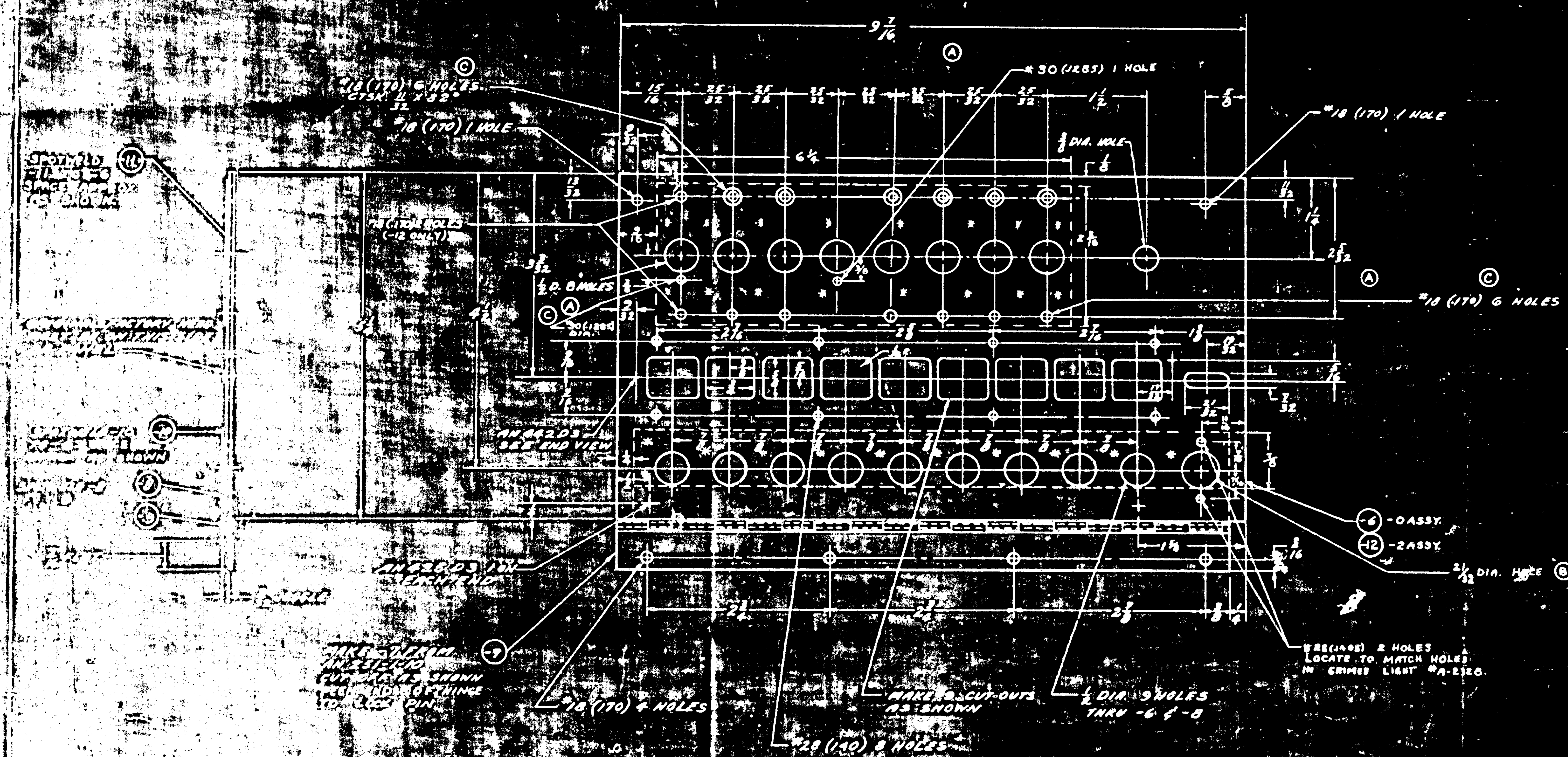

LET	ALTERATION	DATE	BY
A	REM'D DIM. 3/16 & #F (.4844) 1 HOLE CHG'D "1/2 DIA 8 HOLES" WAS "1/2 DIA. 7 HOLES" (NO WT. CHG.)	5-2-42	
B	21/32 DIA. WAS 9/16 DIA. NO WT. CHG.	6-4-42	
C	ON FACE OF DWG. #18 (.170) 6 HOLES CTSK 11/32 x 82° WAS 7 HOLES & #18 (.170) 6 HOLES WAS 7. ADDED DIM. 3/16 & #30 (.1285) DIA (1 HOLE). WT. CHG. NEG.	[illegible]	FUNK
D	CREATED -2 ASSY [illegible] EXCEPT -12 REPLACES -6. -12 IDENT. TO -6 EXCEPT ADDED #18 (.170) 2 HOLES. WT. CHG. NEG.	[illegible]	
E	IN B/M. -7 AN251-H1-10 WAS MAKE FROM AN251-1-10 HINGE HALF -6 AN251-H0-10 WAS MAKE FROM AN251-1-10 HINGE HALF. WT. CHG. NEG.	8-5-43	

FINISH:-
PRIME ALL PARTS ALL OVER
ON FACE OF -6 COVER & HINGE
2 DULL BLACK LAQUER

NOTE:-
ALL DIMENSIONS MUST BE HELD

MCR260
CONT. #91876 91 TO MCR260
CONT. #88476 63 TO MCR260

ASSY DASH NO.	MODEL	NEXT ASSY.	REQ.
-2	PBY-5A	28E6053	1
-2	PBY-5	28E6053	1
-0	28-5AMN	28E6052	1
-0	PBY-5	28E6052	1
-0	PBY-5A	28E6052	1
-0	PBY-5AM	28E6052	1

REQUIREMENTS PER AIRPLANE

REPLACES — CALC WT.
REPLACED BY — ACT WT.
SCALE: NOTED 12" = 1'-0"
STAMP PART NUMBER WHERE SHOWN

PART NO.	STOCK	MATERIAL	SPEC.	REQ. -0	REQ. -2
AN442D3					
AN426AD3					
-12	.064 x 5 3/4 x 10	ALC 24ST	[illegible]		1
-11	.051 x 2 9/16 x 6 3/4	ALC 24ST	[illegible]	1	1
-10	.064 x 7 x 9	ALC 24ST	[illegible]	1	1
-9	MAKE FROM	AN251-H1	[illegible]	1	1
-8	AN251-H0-10			1	1
-7	AN251-H1-10			1	1
-6	.064 x 5 3/4 x 10	ALC 24ST	[illegible]	1	

PARTS LIST PER ASSY.

A.C.		DRAFT 1-19-42	CHECK GERBE
NAVY HEAT TREAT: NONE	FINISH: NOTED	STRUCT REF.	APPROV. 2-4-42 WOLD

NAME: C[illegible] ELEC-MECHS. SWITCH BOX

G 28E6053

CONSOLIDATED AIRCRAFT CORP. SAN DIEGO CALIF.

ENG. FILE

LET	ALTERATION	DATE	BY
A	BROUGHT REQ PER AIRPLANE		
	BLK UP TO DATE NO WT CHG.	9/11/42	
B	@ 510 & D10-10(4) & QB12-D7-B (4) WAS AN520-10-10(4) & QB12-D7-B REMOVED & ADDED AL-10(4) INCR. WT. 6#6.	11-20-42	
C	REVISED AFO/AIRFRAME BLK.		
	NO WT. CHG.	12-17-42	
D	CHANGED @510 & D10-10(4) TO @510 & D10-18(4) & ON FACE OF DWG. ONLY CHANGED QB12-D7-B (4) TO QB12-D7-B(4) CP 92523 WT CHG. NEG.	5/28/43	

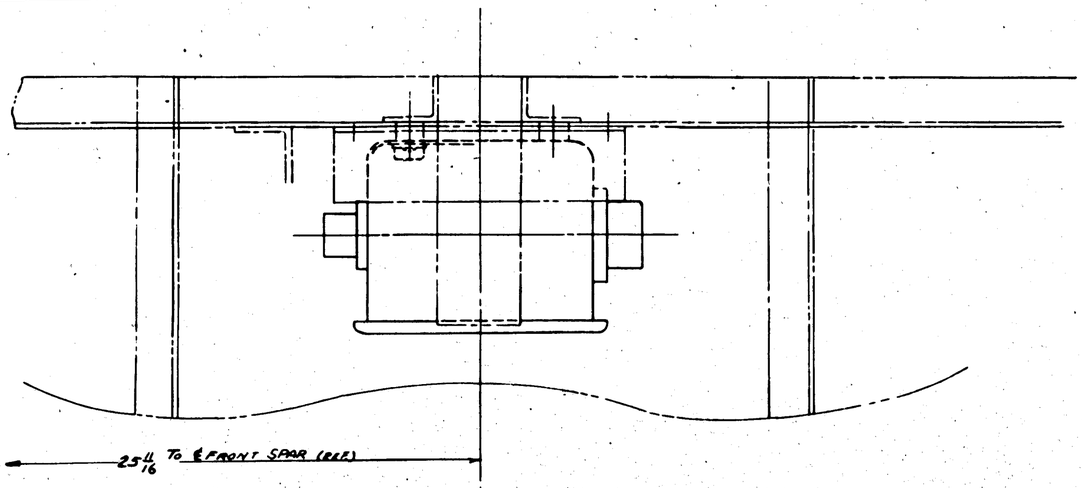

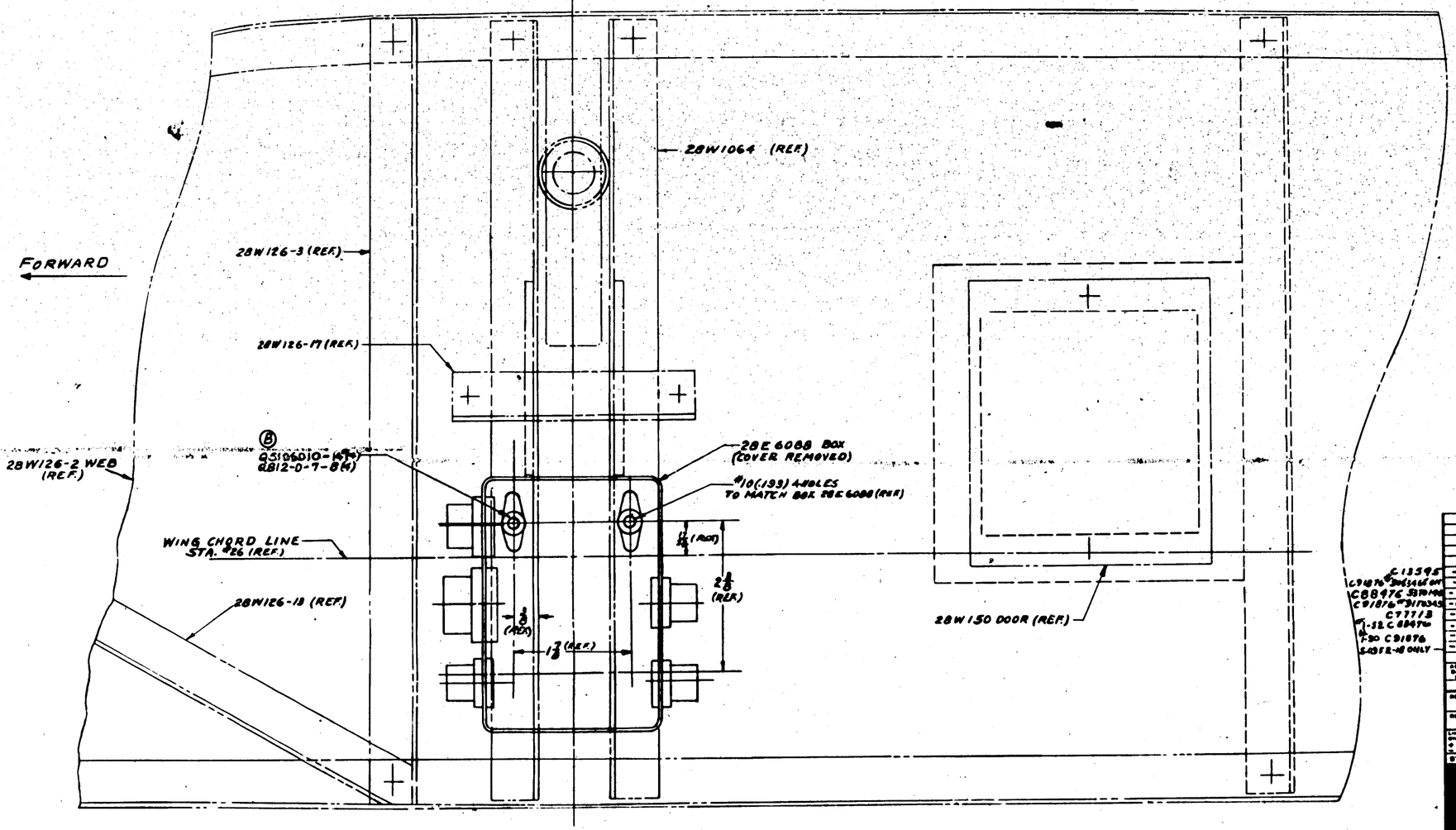

VIEW LOOKING OUTBOARD

NOTE :- INSTALLATION FOR R.H. PANEL ONLY.

ASSY DASH NO.	MODEL	NEXT ASSY	QTY
	REQUIREMENTS PER AIRPLANE		
-0	PBY5A	48E5171A	1
-0	PBY5	28E6021	1
-0	PBY5A	28E6021	1
-0	PBY5	28E6021	1
-0	PBY5A	28E5106	1
-0	PBY5A	28E5106	1
-0	PBY5	28E5190	1
-0	PBY5A	28E5190	1
-0	PBY5B	28E6021	1

REPLACED — STOCK QTY
REPLACED BY — ASSY QTY
SCALE: 12" = 1'0"
STAMP PART NUMBER WHERE SHOWN

PARTS FURNISHED BY BEDWATER

PART NO	STOCK	MATERIAL	SPEC	LH RH REQ -0	LH RH REQ -2	LH RH REQ -3	LH RH REQ -4	LH RH REQ -5
	PARTS LIST PER ASSY.							
QA12-57-B				1				
@510 & D-10				1				
28E6088				1				

AC — NAVY NONE — HEAT TREAT — FINISH
1/16/42 — DRAFT — CHECK — STRUCT — MAT — APPD
2-26-43 — ENGR APPD — SCRAP — SUP'SEDE — APPROVED — WELD
NAME INSTALL.-ELEC. 'RECOGNITION LIGHT JUNC. BOX
CONSOLIDATED AIRCRAFT CORP. San Diego, Calif.
CPP HARD NONE
DWG G
DWG NO. 28E6089
R

	LET	ALTERATION	DATE	BY
E.O. A27859	A	CHANGED -3 ASSY. WT. CHG. NEG.	[illegible]	[illegible]
E.O. A28919	B	ADDED -13 SPOTWELD TO SIDE" TO FACE OF DRWG. (IN -6, -2, -3		
		ADDED IN B/M ADDED -13 K6240X 4⅞ DURAL 53ST 46A10T NEG		
		IN -9, -2, -3 WT. CHG.	[illegible]	[illegible]
E.O. A39962	C	DRILL NOTES [illegible]		
		[illegible]		
		[illegible]		
		BOTTOM VIEW, REMOVED 2 [illegible]		
		[illegible] DIA. HOLE(S)		
		NO WT. CHG.	[illegible]	[illegible]
E.O. A42895	D	REMOVED 27/32 DIA. HOLE & LOC.		
		DIM. [illegible] WT. CHG.	[illegible]	[illegible]
E.O. A50171	E	ADDED [illegible] -3 ASSY ONLY		
		ADDED 1" RAD. [illegible] WT. CHG. NEG.	[illegible]	[illegible]
	F	CUT OUT IN -13 ADD [illegible] ADD LOC.		
		DIMS. [illegible] WT. CHG.	[illegible]	[illegible]
E.O. A65606	G	ADD DIM. 5⅜ [illegible] (-10) AND 9 9/16		
		[illegible] (-10) [illegible]	[illegible]	[illegible]
E.O. A74942	H	ADDED 21/32 DIA HOLE (-2 ASSY ONLY).		
		WT. CHG. NEG.	[illegible]	[illegible]

LET	ALTERATION	DATE	BY
J	MAT'L & SPEC FOR -10 WAS "ALCLAD 24SO 47A8 COND A". ADDED MATERIAL NOTE.		
	REMOVED NOTE #4. WT. CHG. NEG.	[illegible]	[illegible]
K	IN B/M. FOR -7 & -8, REPLACED "K6240 X 6⅜, DURAL 53ST, 46A10-T" WITH "NOTED"		
	FOR -9, REPLACED "K6240 X 9⅝, DURAL 53ST, 46A10-T" WITH "NOTED"; FOR -13		
	REPLACED "K6240 X 4⅞, DURAL 53ST, 46A10-T" WITH "NOTED". COMBINED		
	NOTES 1 & 2 INTO #1. ADDED NOTES #2, #3 & #4. WT. CHG. NEG.	[illegible]	[illegible]

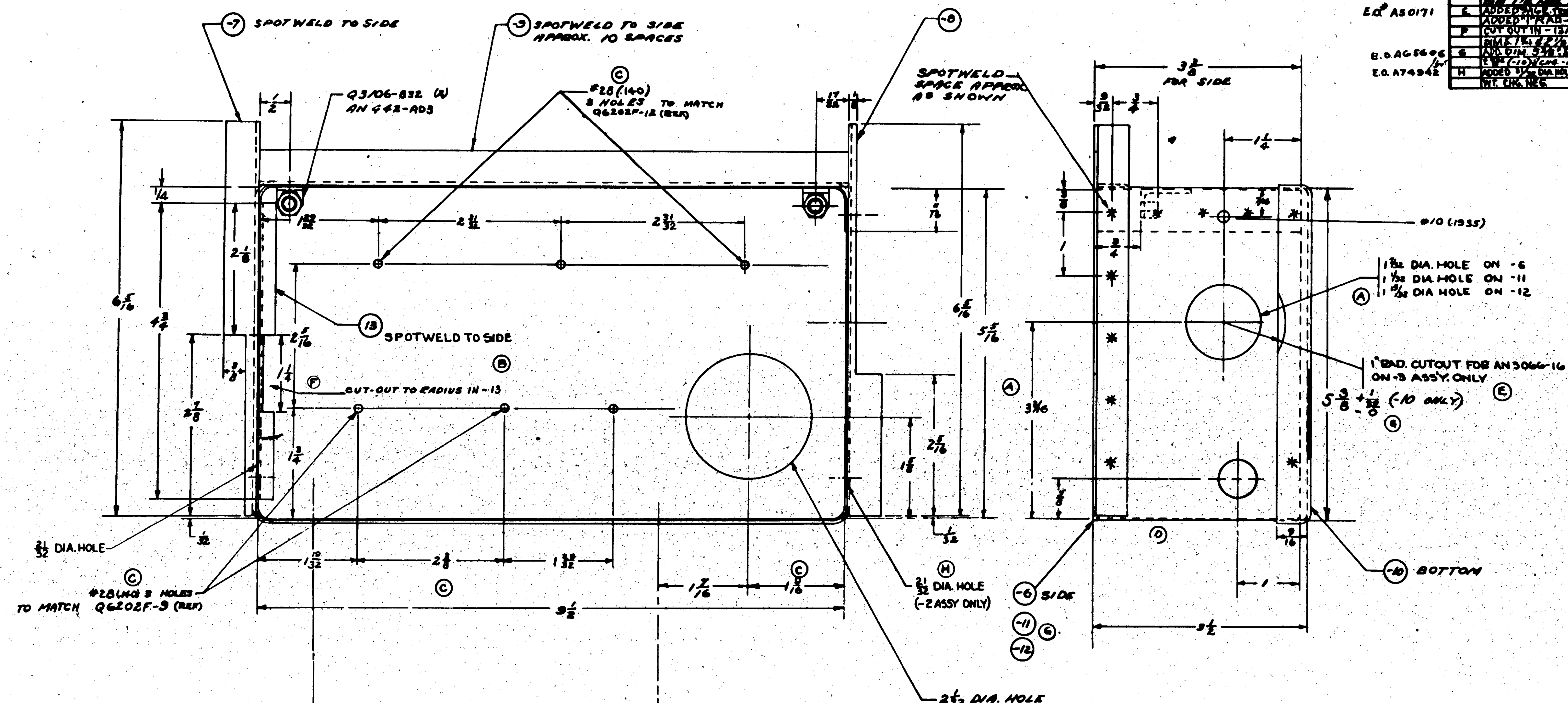

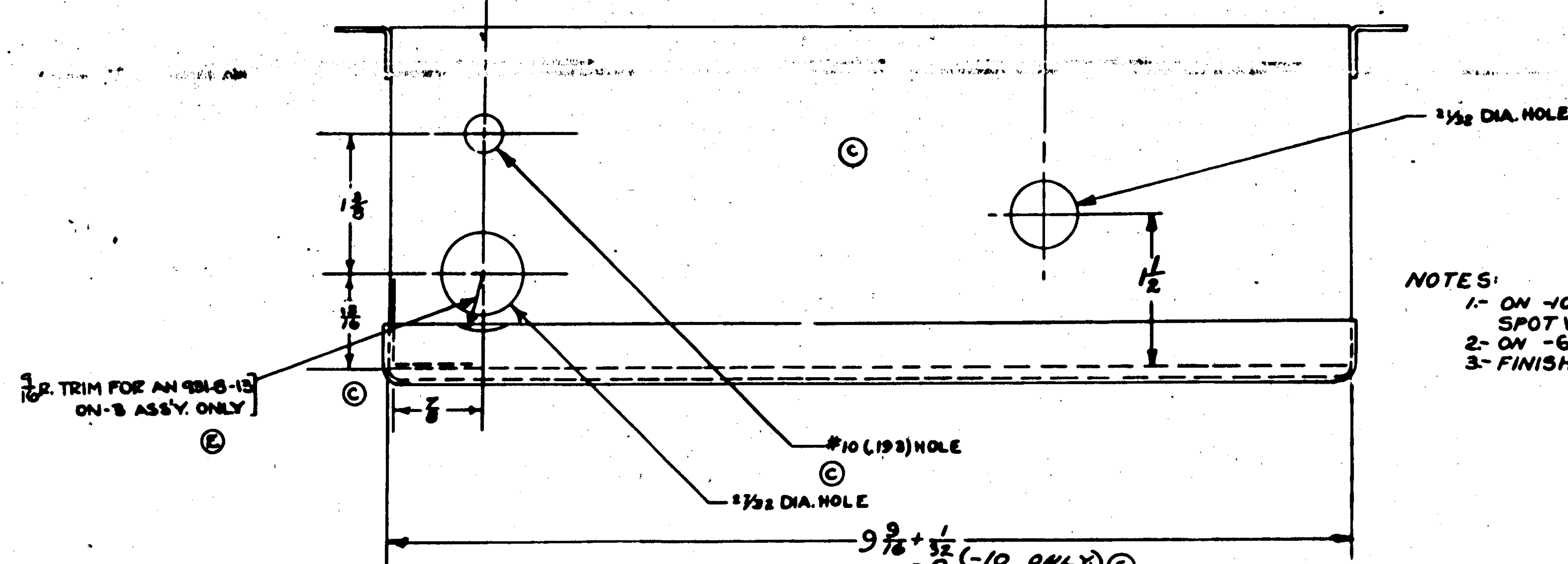

MATERIAL NOTES-

1. MAT'L. FOR -10 MAY BE-
   (A) AL. AL. 52SO, SPEC. 47A11, TEMP. A, H.T. NONE, OR
   (B) AL. AL. 3S ½H. SPEC. 47A4 CL. ½H. H.T. NONE.
2. MAT'L. FOR -7 & -8 MAY BE-
   (A) Y-2-A12T X 6⅜, OR
   (B) K6240 X 6⅜, AL. AL. EXTR., SPEC. QQ-A-331-T.
3. MAT'L. FOR -9 MAY BE-
   (A) Y-2-A12T X 9⅝, OR
   (B) K6240 X 9⅝, AL. AL. EXTR., SPEC. QQ-A-331-T.
4. MAT'L. FOR -13 MAY BE-
   (A) Y-2-A12T X 4⅞, OR
   (B) K6240 X 4⅞, AL. AL. EXTR., SPEC. QQ-A-331-T.

FINISH CODE	
Z	ANODIC TREATMENT
P	P-27 PRIMER
AP	ALUMINIZED PRIMER
C	CADMIUM PLATE

NOTES:
1. ON -10 VERTICAL RADII ¼. RADII AT BOTTOM 3/32 SPOTWELD TO -6 SIDE APPROX. 32 SPOTS 1" APART. C80476 53¢ ON
2. ON -6, BEND RADII 3/32.
3. FINISH P INSIDE, P-AP OUTSIDE. C91876 91¢ ON

ASSY DASH No.	MODEL	NEXT ASSY	REQ
-3	28-5 AMN	28E6051	1
-3	PBY-5A		1
			1
-2	PBY-5		1
-0	PBY-5B	28E6051	1

REQUIREMENTS PER AIRPLANE

PART No	STOCK	MATERIAL	SPEC	-0 REQ	-2 REQ	-3 REQ	-4 REQ	-5 REQ
	AN442-AD3			2	2	2		
	Q3106-832							
-13	NOTED	NOTED	NOTED	1	1	1		
-12	.032 x 30½ x 2½	ALCLAD 24ST	47A8 COND T			1		
-11	.032 x 30½ x 2 x 3⅜	ALCLAD 24ST	47A8 COND T		1			
-10	.051 x 12½ x 8	NOTED	NOTED	1	1	1		
-9	NOTED	NOTED	NOTED	1	1	1		
-8	NOTED	NOTED	NOTED	1	1	1		
-7	NOTED	NOTED	NOTED	1	1	1		
-6	.032 x 30½ x 5½	ALCLAD 24ST	47A8 COND T	1				

PARTS LIST PER ASSY

REPLACES | CALC WT
REPLACED BY | ACT WT
LIMITS ON DIMENSIONS UNLESS OTHERWISE SPECIFIED ± 1/32 | SCALE 12" = 1'-0"
STAMP PART NUMBER WHERE SHOWN

A C | NAVY SR53 | HEAT TREAT | NOTED | FINISH | DRAFT | CHECK | STRUCT | MAT | APPD | ENG

OPP HAND

NAME BOX - ELEC-MECH SWITCH PANEL

DWG G 28E6102

CONSOLIDATED AIRCRAFT CORP. SAN DIEGO CALIF

R 2019393

LET	ALTERATION	DATE	BY

LET	ALTERATION
A	28ES181 (2) WAS 28ES18 WT. CHG. NEG.
B	AC750-40 (2) WAS Q321041-6 (2) WT. CHG. NEG.
C	CREATED -3 ASS'Y NAWL/LM 2-1-42 -4 ASS'Y WAS -5 FOR SHIPS
D	#31 & ON. WT. CHG. NEG.
E	CREATED. -5 ASSY. (NO WT. CHG.) 2-12-42 BASWELL

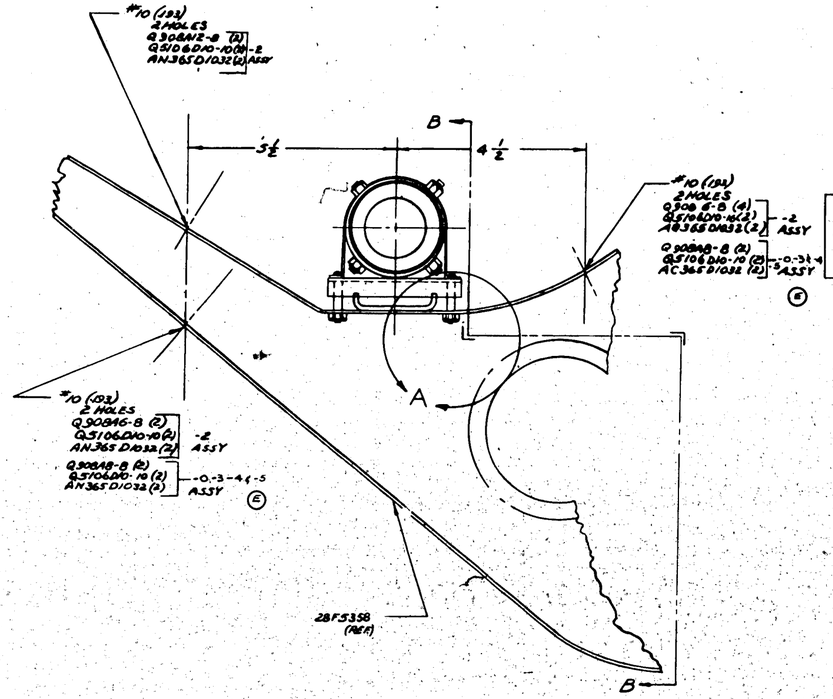

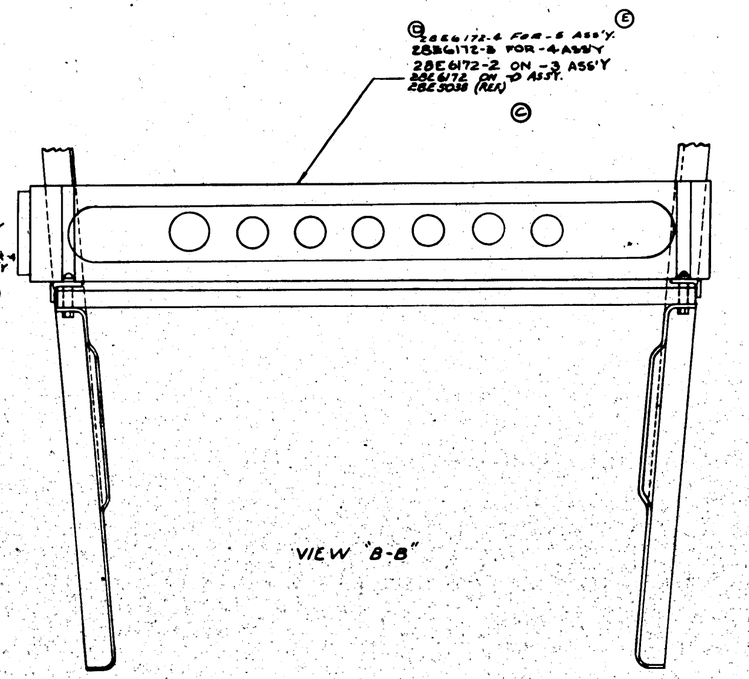

VIEW "B-B"

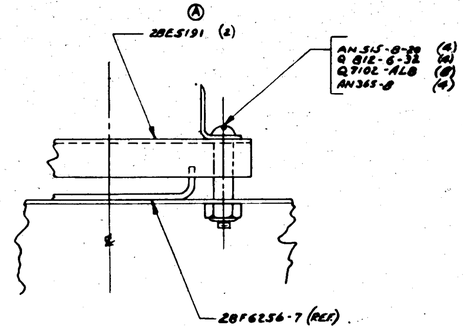

VIEW "A"
SCALE 12"=1'-0"

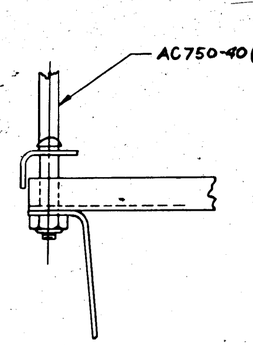

NCR 211-1
("53 TO 144) C #31876
(51 TO 345) B #31876
(#1-50) C #31876
(#1-51) C #88976

ASSY DASH NO	MODEL	NEXT ASSY	REQ
-5	PBY-5A	28E1011	1
-5	PBY-5	28E1011	1
-5	PBY-5A	28E104-155	1
-4	PBY-5	28E104-160	1
-2	PBY-5	28E1011	1
-2	PBY-5A	28E104	1
-0	PBY-5B	28C6062	1

REQUIREMENTS PER AIRPLANE

REPLACED — CALC WT

REPLACED BY — ACT WT

LINEAR DIMENSIONS UNLESS OTHERWISE SPECIFIED ± 1/32 — SCALE 6"=1'-0" & NOTED

STAMP PART NUMBER WHERE SHOWN

PART NO	STOCK	MATERIAL	SPEC	-0	-2	-3	-4	-5
							-	-
28E6172-4							1	/
28E6172-3							/	1
AN515-8-20				4	4	4	4	4
AC365-8D32				4	4	4	4	4
AC365D1032				4	4	4	4	4
Q 5106 D10-16					2			
QS106D10-10				4	4	4	4	4
Q 908N8-8				4	4	4	4	4
Q 908A8-8					6			
Q710L-ALB				8	8	8	8	8
AC750-40				2	2	2	2	2
Q 812-6-32				4	4	4	4	4
Q 908N2-8					2			
28E6172-2						1	/	/
28ES191				2	2	2	2	2
28E6172				/	/	/	/	1

PARTS LIST PER ASSY.

AC	—	—	2-27-42	CHECKED CARL SWD	GUIDES	D.B.A	PRCHL	PROCESS
NAVY	—		O.JAMES	W.A.M.				MOLD
HEAT TREAT	FINISH		DRAFT	CHECK STRUCT	STAT	APPROV	ENG	

NAME INSTALLATION - ELEC. INSTRUMENT PANEL MANIFOLD

OPP HAND —

CONSOLIDATED AIRCRAFT CORP. San Diego Calif

DWG SIZE G — 28E6173

R

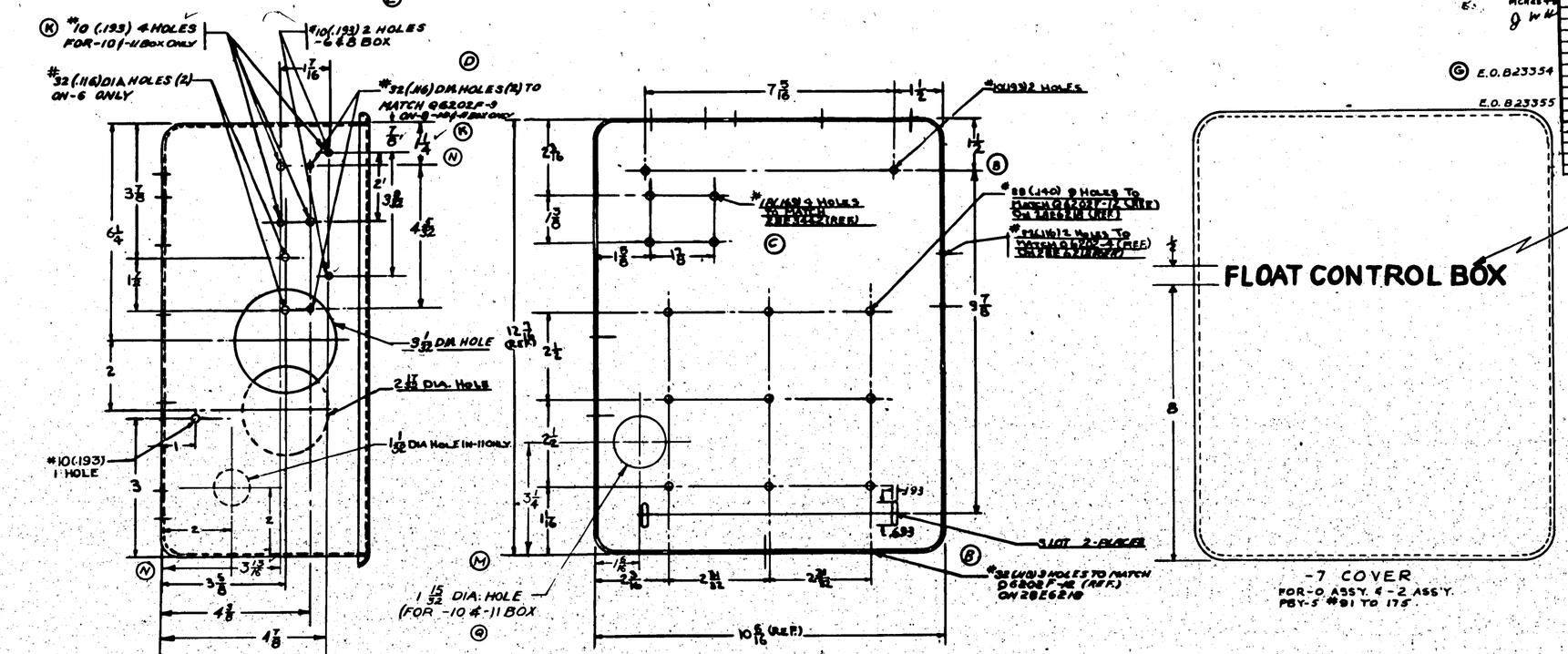
#10 (.193) 4 HOLES FOR -10 BOX ONLY
#10 (.193) 2 HOLES -6 & 8 BOX
#32 (.116) DIA HOLES (2) ON -6 ONLY
#32 (.116) DM HOLES (2) TO MATCH G6202F-9 ON -8 & -10 BOX ONLY
3 1/32 DM HOLE
2 17/32 DIA. HOLE
1 1/32 DIA HOLE IN -11 ONLY
#10 (.193) 1 HOLE
1 15/32 DIA. HOLE (FOR -10 & -11 BOX
#10 (.193) 9 HOLES TO MATCH G6202F-12 (REF.) ON 28E6218 (REF.)
#32 (.116) 4 HOLES TO MATCH G6202F-12 (REF.) ON 28E6218 (REF.)
#10 (.193) 2 HOLES
#32 (.116) 3 HOLES TO MATCH G6202F-12 (REF.) ON 28E6218
.193
SLOT 2 PLACES
10 5/16 (REF.)

LET	ALTERATION	DATE	BY
J	#11/32 DIA. HOLE (DOTTED LINES) WAS (SOLID LINES) NO WT. CHG.	1-14-42	ROSS
K	CREATED -10 BOX SAME AS -8 BOX EXCEPT #10 (.193) 4 HOLES IN -10 BOX AND #10 (.193) 2 HOLES IN -6 & -8 BOX AS SHOWN. CREATED -2 ASSY CONSISTING OF -10 BOX & -9 COVER FOR PBY-5A CONT. NOA (s) 441 -3 ASSY REPLACES -3 NEW WT. CHG. NEG.	2-11-42	KLAPP
L	CREATED -4 ASSY. FOR PBY-5A MCR 284-S SIMILAR TO -3 ASSY EXCEPT -11 BOX REPLACES -10 BOX, LIMITED -3 ASSY FOR PBY-5A NOA-(s) 464 MCR 1246. WT. CHG. NEG.	2-11-42	KLAPP
M	ADDED 1 15/32 DIA. HOLE (FOR -10 BOX ONLY) & 1 3/16 & 1 3/64 DIMS. WT. CHG. NEG.	2-6-42	LEWIS
N	DIM. 1 1/4 WAS 7/8. ADDED 3 1/16 DIM. NO WT. CHG.	2-6-42	LEWIS
P	LIMITED #32 HOLE TO -8 ONLY NO WT. CHG.	2-26-42	MEYER
Q	IN NOTE "1" 15/32 DIA HOLE (FOR -10 & -11 BOX) WAS "15/32 DIA HOLE (FOR -10 BOX ONLY)" NEG. WT. CHG.	2-24-42	CARLTON

LET	ALTERATION	DATE	BY
A	RELOCATED 4 DIA. (4) HOLES TO MATCH RELAY ON 28E6218 REF. NO WT. CHG.	2-9-42	LEWIS
B	#10 (.193) 2 HOLES ETC." WAS "#32 (.116) 2 HOLES ETC." RELOCATED TO SHOWN HOLE. WT. CHG. NEG.	6-3-42	LEWIS
C	CHANGED #32 (.116) TO #30 (.128) ON NOTE NO WT. CHG.	2-9-42	LEWIS
D	CREATED -2 ASSY NEG. WT. CHG.	11-24-41	MEYER
E	ADDED #10 (.193) DIAM (2) HOLES & DIMS. TO B & 2 7/16 DIM. NEG. WT. CHG.	11-14-41	LEWIS
F	ADDED TO -8 3/16 DIA. HOLE & DIM. 2 7/8. NEG. WT. CHG.	2-26-42	MEYER
G	ADDED -7 COVER & STENCILING FOR PBY5A ONLY (NO WT. CHG.)	12-23-41	KLAPP
H	-9 WAS -7 FOR -2 ASSY. ADD PBY-5 #176 & ON (NEG. WT. CHG.)	12-22-41	KLAPP

E.O. A33868
E.O. A36381
E.O. A40384
E.O. A36021B
E.O. A64058
E.O. A64247
E.O. MC-1728

MRC 246
MCR284-S
E.O. B23354
E.O. B23355

STENCIL WITH LETTERS ½ HIGH FOR PBY-5B ONLY

FLOAT CONTROL BOX

-7 COVER
FOR -0 ASSY. & -2 ASS'Y. PBY-5 #91 TO 175

NOTES:
1. BOX MAY BE PURCHASED FROM POVL-SEN & NARDON CO. SPECIFYING:
   P.&N. 1616-600N BOX
   P.&N. 1818-5S D COVER.
2. BOX TO BE FURNISHED WITH TIGHT FITTING COVER NON-LOSEABLE SCREWS, AND DURAL WASHERS
3. FINISH- P- INSIDE PAP OUTSIDE
4. REMOVE FINISH 3/32 RADIALLY AROUND CONDUIT HOLES.

FINISH CODE	
Z	ANODIC TREATMENT
P	P-27 PRIMER
AP	ALUMINIZED PRIMER
C	CADMIUM PLATE

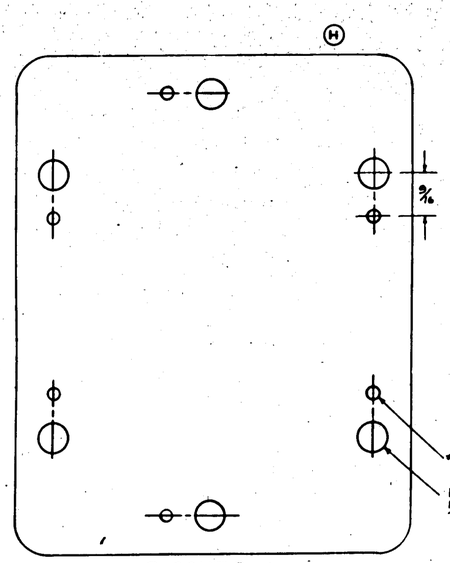

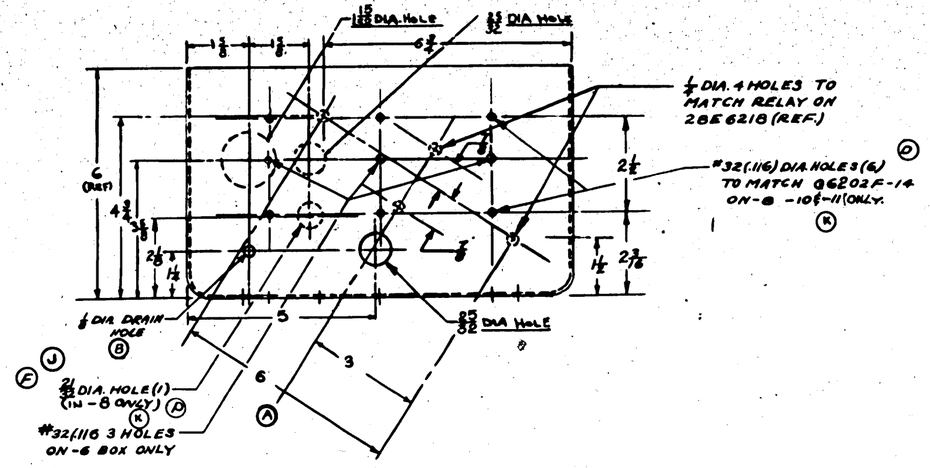
15/128 DIA. HOLE
5/32 DIA HOLE
1/4 DIA. 4 HOLES TO MATCH RELAY ON 28E6218 (REF.)
#32 (.116) DIA. HOLES (6) TO MATCH G6202F-14 ON -8 -10 & -11 (ONLY.
1/4 DIA. DRAIN HOLE
21/64 DIA. HOLE (1) (IN -8 ONLY)
#32 (.116) 3 HOLES ON -6 BOX ONLY
#30 (.128) D. HOLES (6)
DRILL OUT EXISTING HOLES IN COVER TO 3/8 DIA (6)

IN B/M
△ PBY-5B, PBY-5A #53 & ON, OS-5AMN, (PBY-5 #91 TO 175.
● PBY-5 #176 & ON.

PARTS MADE FOR PBY-5B #1

C. NOA (s) 464 #201 (
C NOA (s) 464 #1-200
CONTRACT 68476
CONTRACT 81676
91 & ON

	MODEL	NEXT ASSY.	REQ.
-4	PBY5A	28E6218	1
-3	PBY-5A	28E6218	1
-0	PBY-5AMN	28E6218	1
-0	PBY5A	28E6218	1
-2	PBY5	28E6218	1
-0	PBY5B	28E6218	1

REQUIREMENTS PER AIRPLANE
REPLACES
REPLACED BY

Box -11	
Box -10	
Cover -9	
Cover -7	
Box -8	C.A.C. Box 70-600N
Δ Cover -7	C.A.C. Box 70-600N
Box -6	

PART No	STOCK	MATERIAL	SPEC	LH REQ	RH REQ	LH REQ	RH REQ	LH REQ	RH REQ	LH REQ	RH REQ
PARTS LIST PER ASSY.				-0		-2		-3		-4	-5

SCALE: 6" = 1'-0"
STAMP PART NUMBER WHERE SHOWN

A.C.				3-3-42	Issued	Engr.	AAA
NAVY					Approved	CHIEF ENGR.	
HEAT TREAT	FINISH		DRAFT	CHECK	STRUCT	MAT	APPROV
					FAULKNER		

NAME: BOX-ELEC-FLOAT RELAY JUNCTION
CONSOLIDATED AIRCRAFT CORP. San Diego, Calif.
OPP HAND
DWG G
DWG 28E6217

R
L129-382

LET	ALTERATION	DATE	BY
	ASSYS. NO WT. CHG.	8-14-43	[illegible]
W	REMOVED 28E6217-3 (1 REQ) FROM -31 ASS'Y. ADDED 28E6217-4 TO -31 ASS'Y. ADDED TO NOTE 28E6217-3 (FOR -30 ASS'Y) & 28E6217-4 (FOR -31 ASS'Y) NO WT. CHG.	8-14-43	[illegible]
X	IN B/M REMD AN3064-4 & AN3066-4 FROM -30 & -31 ASSYS WT. CHG NEG	8-30-43	[illegible]
Y	CAC REL. 17-75 GE RELAY CR 279F102A3 (1) WAS CAC REL. 17-75 (1). NO WT CHG	9-27-43	[illegible]

E.O. B23356

E.O. B23393A

LET	ALTERATION	DATE	BY
S	CREATED -31 ASSY FOR PBY5A NOs (1)464 MCR254-5 & ON, -31 ASSY IDENTICAL TO -30 ASSY EXCEPT ADDED AN3064-10(1) & AN3066-10(1). LIMITED -30 ASSY FOR PBY5A NOs (1)464 MCR246 TO MCR 254-5	7-1-43	KAPP
T	ADDED AC525-416-11 (1), AC525-416-11 (REF), AC365-428 (1) & Q7102-AL416 (5). AC525D416-11 (3 REQ'D) WAS (4 REQD) & AC365D428 (3 REQD) WAS (4 REQ'D). NEG. WT. CHG.	8-3-43	[illegible]
U	ADDED AN3056-16(1) & 28E6242-10(1) FOR -30 & -31 ASS'YS. NEG. WT. CHG	8-14-43	[illegible]
V	REMOVED 28E5393 (1 REQD) FROM -30 & -31 ASS'YS. ADDED 28E5859 (1 REQD) TO -30 & -31		

MCR 254-5

E.O. A89038A - P-17-28

E.O. A90115 - CHG. B9-18

E.O. A91443 -

E.O. A96950 (CAC 2-15-42)

E.O. B 0856

E.O. A98923 MCR 246

LET	ALTERATION	DATE	BY
CON'T	ASSY ADDED "TYPICAL STUD ASSEM" & NOTE "SNAP---- N.J." ADDED G-534-A (6), 2540-1-B (6), 32E195 (6) G142-A (6), AN935-8 (12) & Q610-6-6 (6) WT. CHG. NEG.	12-24-42	[illegible]
J	ADDED NOTE "SHELLAC---4 ASSY" IN B/M ADDED 28E5375 (1) [illegible]	[illegible]	[illegible]
K	"BUL. #6046-H29" WAS "BUL. #6046" "B10-508" WT. CHG. NEG.	12-24-42	[illegible]
L	CREATED -5 ASSY, ADDED NOTE #2 NO WT. CHG	[illegible]	[illegible]
M	REM'D 28E6314 (1) FROM -3 ASS'Y, & 28E5834-6 (1) FROM -4 & -5 ASSYS. WT. CHG. NEG.	2-11-43	[illegible]
N	NOTE "APPLY--- ONLY." WAS "SHELLAC--- (-3 ASSY ONLY)" WT CHG NEG	2-11-43	[illegible]
P	ADDED 28E1133-61. WT. CHG. NEG.	2-11-43	[illegible]
R	CREATED -30 ASSY. SAME AS -5 ASSY EXCEPT CAC REL. 17-75 REPLACED 28E5694 ADDED ON FACE OF DWG & B/M C.A.C. REL. 17-75 (1), ON FACE OF DWG. LIMITED 28E5694-0 TO (-0, -2, -3, -4, & -5 ASSYS. -30 ASSY REPLACES -5 ASSY [illegible]	[illegible]	[illegible]

LET	ALTERATION	DATE	BY
A	CHGD REQ OF AC365-440 (4) TO (5) AN515-4-6 (4) TO (5) Q7102 AL4 (4) TO (5). ADDED 28E6056-6 (4) AN515-6-6 (9) AC366F-632 (9) & AN425 AD3 [illegible] AC366F-832 (4) WAS AC365-[illegible] (4). NEG WT. CHG.	[illegible]	[illegible]
B	ADDED 28E6314 & NOTE "SHELLAC ... SHELLAC" NEG WT. CHG	[illegible]	[illegible]
C	CREATED -2 ASSY; WT. CHG. NEG.	[illegible]	[illegible]
D	CREATED -3 ASSY ADDED NOTE "SHELLAC 28E5834-6 ONLY" NO WT. CHG	[illegible]	[illegible]
E	CREATED -4 ASSY FOR -0 & -3 ASSY REPLACED Q6202F-12 (3) WITH Q6202F-14 (3). NEG WT CHG	[illegible]	[illegible]
F	ADDED FOR -4 ASSY ONLY AN3064-4 (1) & AN3066-4 (1) NEG WT CHG.	[illegible]	[illegible]
G	ADDED AC365D1032 (2) & Q5106 D10-8 (2) & 28E5694 (1). WT. INC. .65	[illegible]	[illegible]
H	ADDED VIEW OF COVER FOR -4		

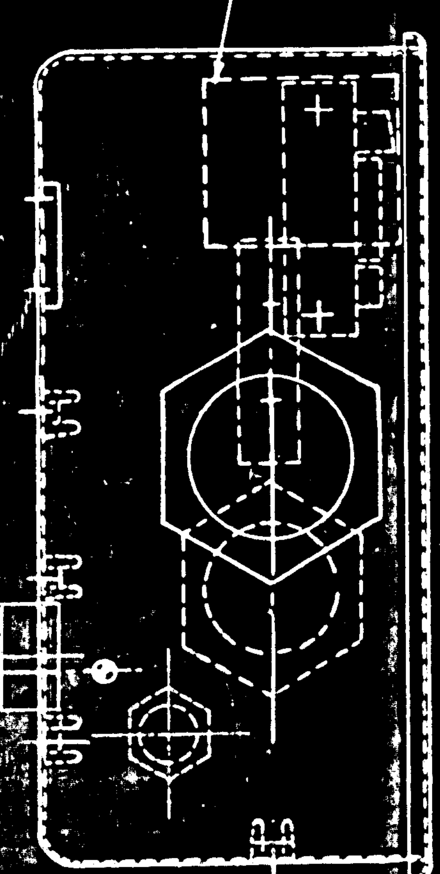

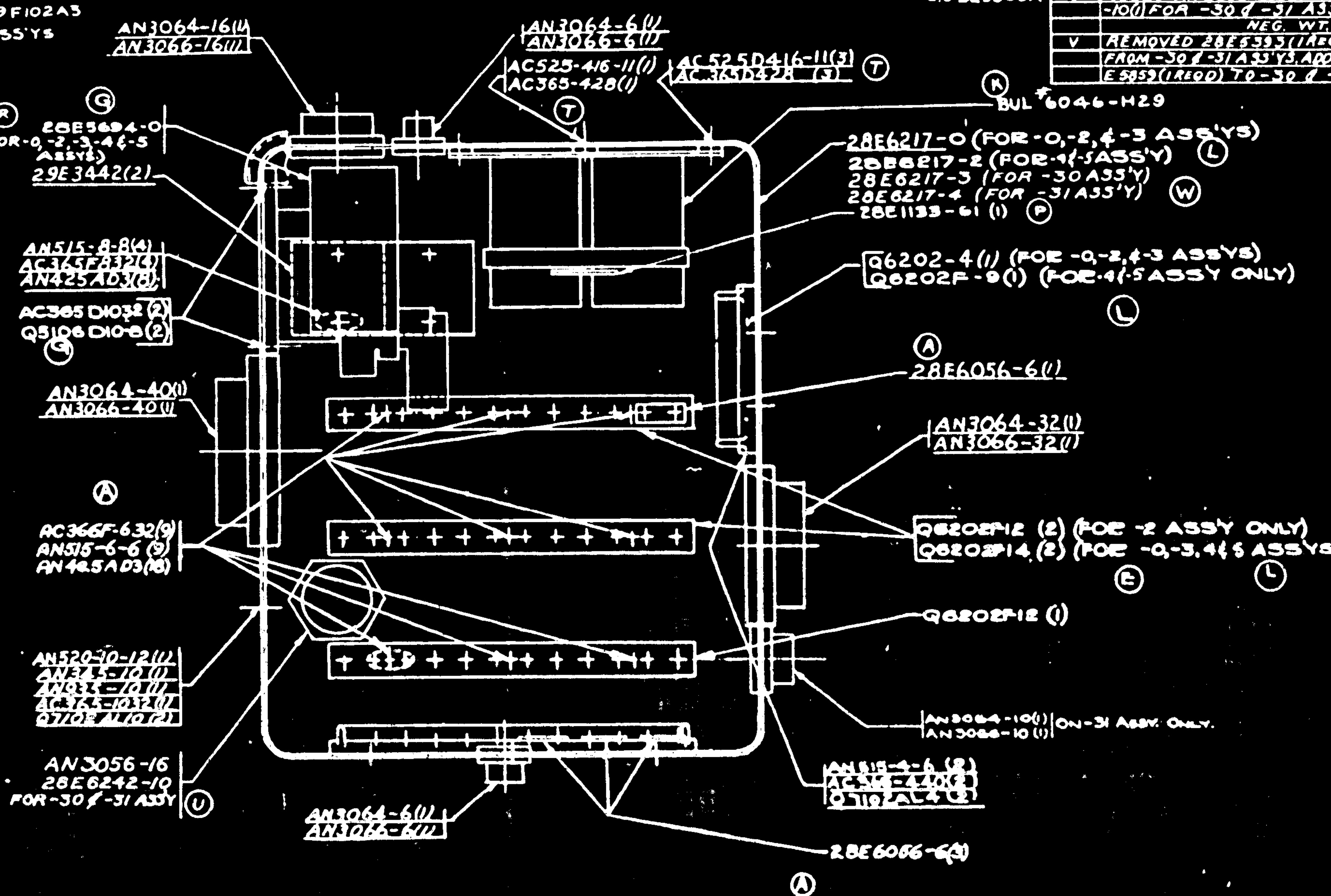

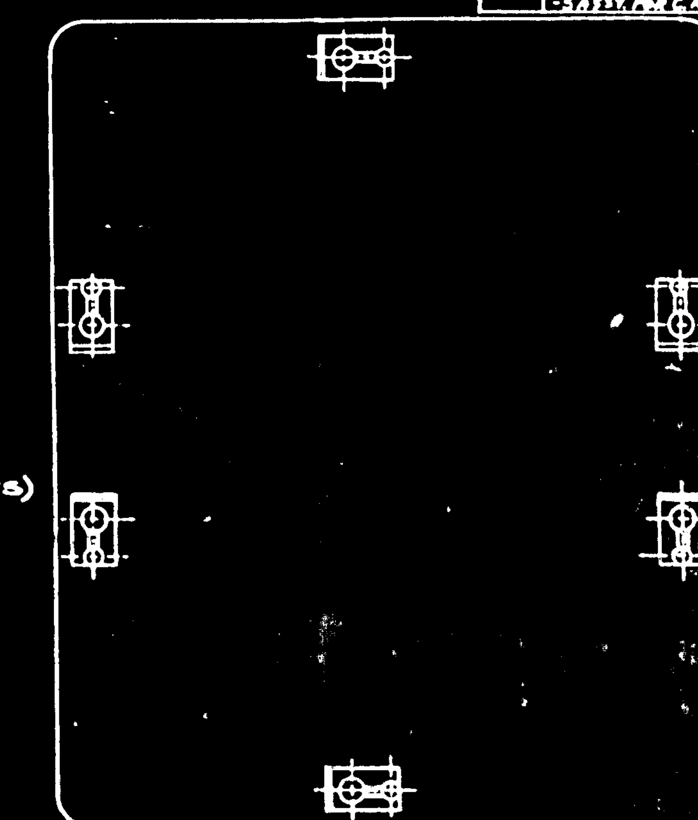

(H) VIEW OF COVER
FOR -4 & -5 ASS'YS ONLY
(L)

(H) NOTE:-
SNAP SLIDE PARTS OBTAINABLE FROM AIRCRAFT RADIO CORP. BOONTON N. J.

SNAP SLIDE PARTS
G-534-A BUTTON (6) FLUSH ON BACK OF COVER
2540-1-B SLIDE (6)
32E195 STUD (6)
G-142-A WASHER (6)

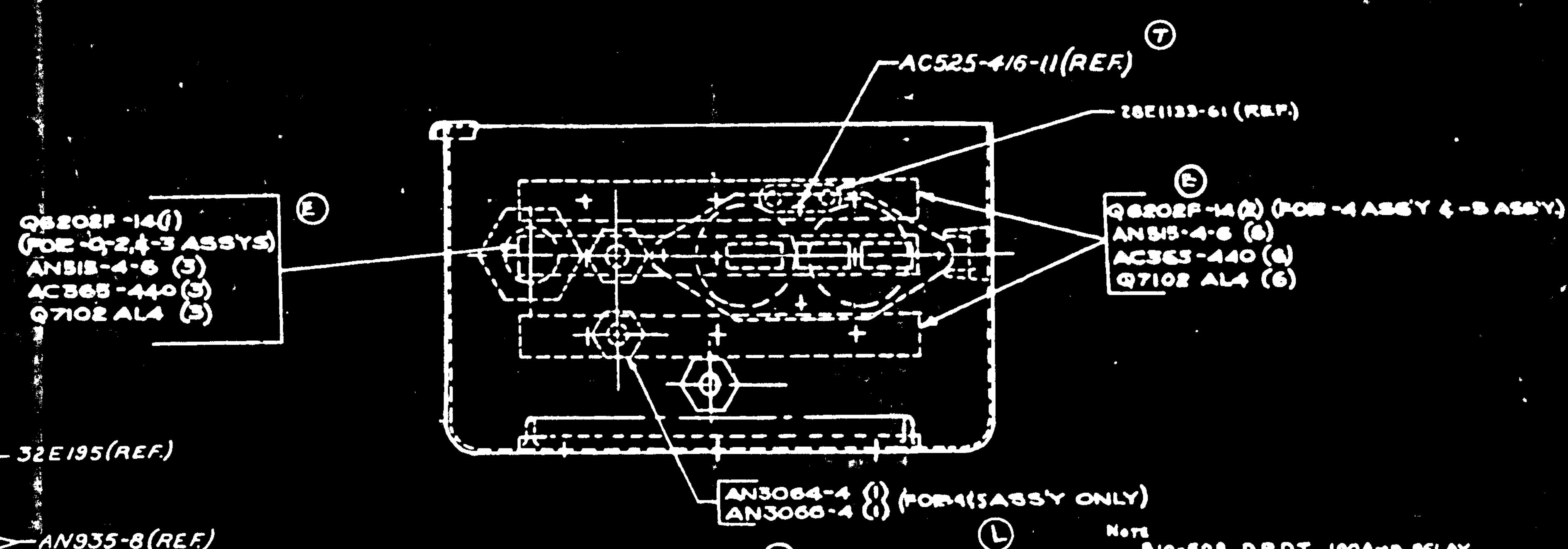

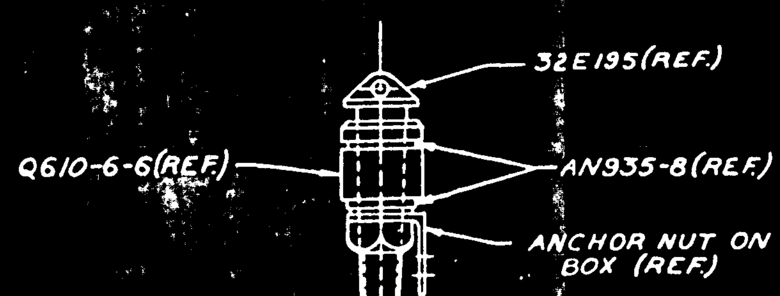

TYPICAL STUD ASSEMBLY

(J) NOTE: (1) SHELLAC 28E5375 TO INSIDE OF COVER 28E6217 (REF) & COVER WITH SHELLAC (FOR -4 ASS'Y ONLY)

(2) SHELLAC 28E5393 TO INSIDE OF COVER 28E6217 (REF) & COVER WITH SHELLAC (-5 ASS'Y ONLY.

(L)

Note
B10-508 D.P.D.T. 100 AMP. RELAY MAY BE PURCHASED FROM CUTLER-HAMMER INC. - MILWAUKEE, WISCONSIN.

(B) NOTE:
SHELLAC 28E6314 TO INSIDE OF COVER 28E6217 & COVER WITH SHELLAC. (FOR -0 ASS'Y, -2 ASS'Y) (D)

(N) NOTE:
APPLY 28E5834 TO INSIDE OF COVER 28E6217. IF BLUE PRINT CUT-OUT IS USED, SHELLAC ON & COVER WITH SHELLAC. (FOR -3 ASS'Y ONLY.)

PARTS MADE FOR PBY-5B #1

NOs (1)464 MCR254-5 & ON
MCR 21-22 C-91870 #346 & ON

NOs (1)464 MCR246 TO MCR 254-5
MCR/64-2 CONTRACT 88436
55-146

CONTRACT 91836
51-345

ASSY DASH No.	MODEL	NEXT ASSY	No.
-31	PBY5A	28E6219	1
-5	PBY-5	28E6219	1
-30	PBY-5A	28E6219	1
-2	28-5AMN	28E6219	1
-3	PBY5A	28E6219	1
-4	PBY5	28E6219	1
-0	PBY5B	28E6219	1

REQUIREMENTS PER AIRPLANE

REPLACES

REPLACED BY

SCALE 6" = 1'-0"

STAMP PART NUMBER WHERE SHOWN

PART No	STOCK	MATERIAL	SPEC.	-0	-2	-3	-4	-5	-30	-31
[illegible]				[illegible]	[illegible]	[illegible]	[illegible]	[illegible]	[illegible]	[illegible]
CAC REL. 17-75	GE RELAY CR 279F102A3								[illegible]	[illegible]
AC365D1032				2	2	2	2	2	2	2
Q5106D10-8				2	2	2	2	2	2	2
BUL 6046-H29				1	1	1	1	1	1	1
AN515-6-6				9	9	9	9	9	9	9
AN425AD3				26	26	26	26	26	26	26
Q7102AL4				[illegible]	[illegible]	[illegible]	[illegible]	[illegible]	[illegible]	[illegible]
Q7102AL10				2	2	2	2	2	2	2
AC365D428				3	3	3	3	3	3	3
AC365-440				[illegible]	[illegible]	[illegible]	[illegible]	[illegible]	[illegible]	[illegible]
AC366F-832				4	4	4	4	4	4	4
AC525D416-11				3	3	3	3	3	3	3
AN515-4-6				[illegible]	[illegible]	[illegible]	[illegible]	[illegible]	[illegible]	[illegible]
AN515-8-8				4	4	4	4	4	4	4
AN3066-6				2	2	2	2	2	2	2
AN3064-6				2	2	2	2	2	2	2
AC366F-632				9	9	9	9	9	9	9
28E6056-6				4	4	4	4	4	4	4
29E3442				2	2	2	2	2	2	2
28E6217-0				[illegible]	[illegible]	[illegible]				

PARTS LIST PER ASSY.

A C		3-3-42		
NAVY				
HEAT TREAT	FINISH	DRAFT	CHECK	STRUCT

ENG. FILE

NAME BOX ASSY - ELEC. FLOAT RELAY JUNCTION

OPP HAND NONE

DWG SIZE G 28E6218

CONSOLIDATED AIRCRAFT CORP. SAN DIEGO CALIF.

LET	ALTERATION	DATE	BY	LET	ALTERATION	DATE	BY
A	CREATED -8 ASSY FOR PB- SAMN- NO WT CHG	7-15-43	[illegible]				
B	CREATED -4 ASSY NO WT CHG	8-6-43	[illegible]				
C	CREATED -5 ASSY FOR PBY-5A (33-146) NBS -0 ASSY, 2 -6 ASSY FOR PBY-5 (33-145) WAS -0 ASS'Y NO WT CHG	2-6-43	MB NBS	RC			
D	REVISED LIMITATIONS ON REQ'L AIRPLANES. NO WT. CHG.	2-6-43	[illegible]	RC			
E	REVISED REQ'L ASSEMBLIES. NO WT. CHG.	6-18-43	[illegible]				
F	CREATED -30 ASSY. SAME AS -6 ASSY EXCEPT 28E6218-30 REPLACES 28E6218-5. ADDED 28E6218-30 (1) TO B/M -30 ASSY. REPLACES -6 ASSY. FOR C. HABIBES PBY-5A ONLY WT. CHG. REQ.	5-25-43	MB CMH				
G	AMENDED TO -30 ASSY. 28E6218-31 "FOR MCR 254-5" LIMITED 28E6218-30 IN -30 ASSY. FOR" UP TO MCR. 254-5	6-17-43	KC-PP				

E.O. A48046
E.O. A66845
MCR 23-226 [illegible]
E.O. 80063
MCR 178-8 & MCR 23-226
E.O. B2736
MCR 264-6

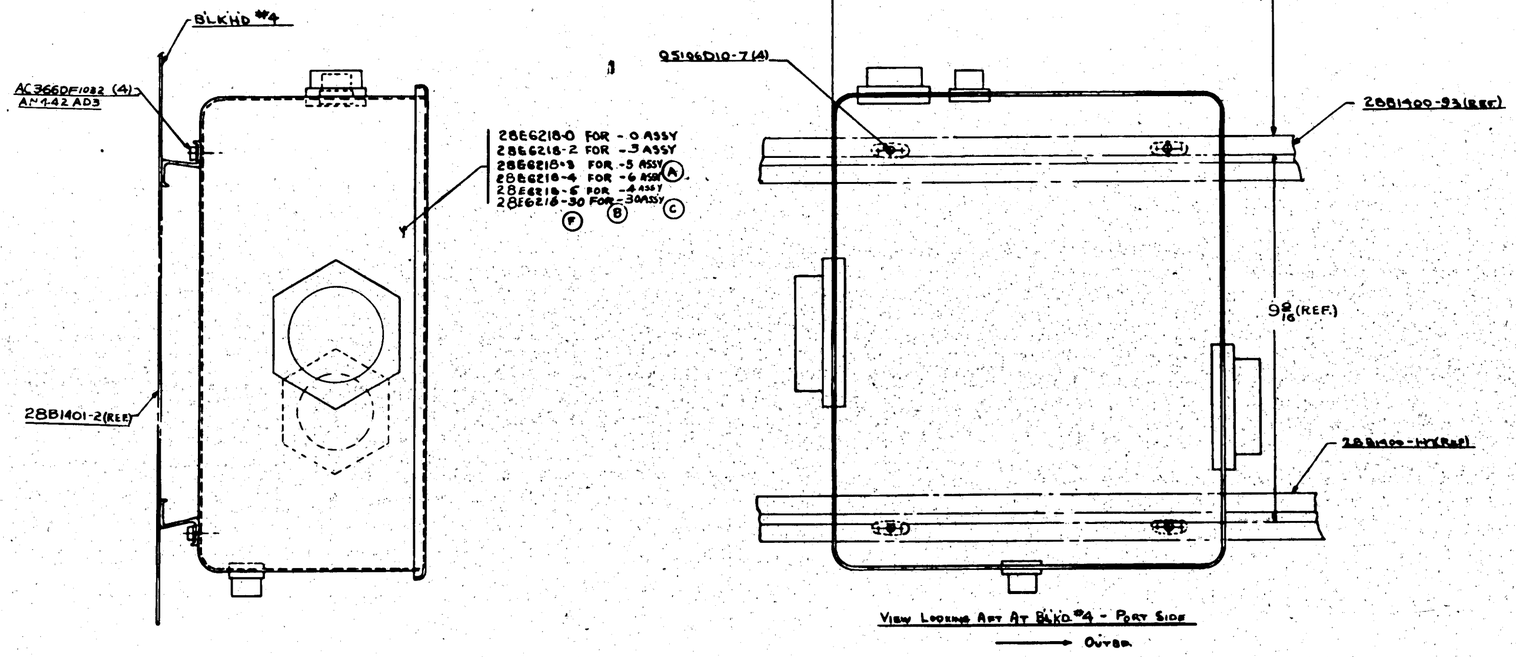

C. NKS 13595
* 81876 Ships 3466 on

* 88476 Ships 33 on
* 88476 Ships 33-146
* 81876 Ships 81-1 on
* 81876 Ships 81-345

ASSY DASH NO	MODEL	NEXT ASSY	REQ	28E6218-30	28E6218-5	28E6218-4	28E6218-3	28E62192	28E6218-0	PART No	STOCK	MATERIAL	SPEC	LH REQ	RH REQ	LH REQ	RH REQ			
	REQUIREMENTS PER AIRPLANE			For MCR 254-5						GS106D107				4		4		4	4	4
-30	PBY-5A	28E4018	1																	
-4	PBY-5	28E4018	1																	
-3	PB-5 AMN	28E6556	1																	
-2	PB-5AMN	28B1400	1							AC366DF1032						4				
-2	PBY5A	28B1400	1																	
-5	PBY5A	28E4018	1																	
-2	PBY5	28B1400	1							AN442AD3								1		
-6	PBY5	28E4018	1																	
-2	PBY5B	28B1400	1																	
-0	PBY5B	28E6046	1																	
	REPLACES		6-264 SALE QTY	To MCR 254-5																
	REPLACED BY		ACT QTY																	
	LAYOUT OR DRAWING DIVISION	SCALE	6"=1'-0"																	
	STAMP PART NUMBER WHERE SHOWN																			

PARTS LIST PER ASSY.

A C				33-42																
NAVY																				
HEAT TREAT	FINISH			DRAFT	CHECK	STRUCT	MAT	APPROV	ENG											
NAME	INSTALL-ELEC-FLOAT RELAY JUNCTION BOX			OPP HAND																
CONSOLIDATED AIRCRAFT CORP. SAN DIEGO CALIF				DWG	G	28E6219														
				SIZE																

R 6129382

LET	ALTERATION	DATE	BY
A	REVISED FOR MOLDED PHENOLIC HOUSING WT CHG. - 1LB.	1/11/42	LASC
B	ADDED CAN, INSTR. W/O. NO WT CHG.	2-10-42	BRIM
C	ON FACE 2 MS AN505-8-60 (NAS AN505-8-60) AN515-8-9(2) & MS336-C-8(2) (NAS AN335-8(2) NO WT CHG.	10-19-42	[illegible]
D	P.C.N. FROM SH 1 (FACE, 2) BEARS (ROOTS NWL) AN3225-32 (1) AN836-C-8(16) (NAS 836-C-8(16)) AN515-8-9(1) AN960-8(2) (NAS 620, ROVL 626-8(2)) (COMMERCIAL 626-8(2)) (NAS 620) AN960-10(2) (NAS 620) AN960-10L(1) & AN960-8(2) & 2084-8999. (MEN MAKES DON'T MAY BE PURCHASED FROM ROOTS AIR-CRAFT NUT CORP SPECIFYING BEARING (2) BEARINGS (NOT TO BE RUBBER CEMENTED TO 2084-8999 (NUT) LOCKED WITH AN335-32-8 (OR) DOUBLE WRAP & TWIST	[illegible]	[illegible]
E	LIMITED RIVETS FOR ALL P&Y-SA AS3X3 TO MCR#228 NO WT CHG	3-11-43	[illegible]
F	ADDED CAC. NO. SW-17-75 & SW-17-76 SWITCH. ANGLES CALIF. NO WT CHG.	3-23-43	[illegible]

E.O. A52788
E.O. A7E960 Q

C.A.C. #10U-5
#WPH-2 SWITCH HOUSING OR EQUIV. MAY BE PURCHASED FROM, COLE ELECTRIC COMPANY, LOS ANGELES, CALIFORNIA } REF

Ⓑ TRAVEL OF ACTUATER PIN MUST NOT BE GREATER THAN 1/8 MAX. BEFORE MICRO SWITCH IS ACTUATED

C.A.C. #SW-17-75
#BZ-R31 SWITCH MAY BE PURCHASED FROM, MICRO SWITCH CORP, FREEPORT, ILLINOIS, OR
#AN-101-B SWITCH MAY BE PURCHASED FROM MU SWITCH CORP, LOS ANGELES, CALIF. } REF

Ⓒ

Q7018-N46-064 (2)
Q7018-AL46-018 (2)

NAF 213024-3
NAF 213028-3

VIEW WITH COVER REMOVED

PART NO	STOCK	MATERIAL	SPEC	LH REQ	RH REQ	LH REQ	RH REQ	LH REQ	RH REQ	LH REQ	RH REQ
PARTS LIST PER ASSY.				-0	-2	-3	-4	-5			
-0	10-SAMC	28E5813		1							
-0	10-SAMJ	28E5811		1							
-0	P&Y-SA	28E5812		1							
-0	28-SAMC	28E5823			1						
-0	28-SAMJ	28E5821			1						
-0	P&Y-SA	28E5822			1						
-0	29-SAMC	28E5833		2							
-0	29-SAMJ	28E5831		2							
-0	P&Y-SA	28E5832		2							
-0	30-SAMC	28E5834		2							
-0	30-SAMJ	28E5834		2							
-0	P&Y-SA	28E5834		2							

1 TO MCR #228
1 TO MCR #228
1 TO MCR #228
1 TO MCR #228

CAC NO.	NAME	QTY
CAC NO. 1	COLE ELEC. CO. #WPH-2 SWITCH HOUSING	1
CAC NO. 2	#BZ-R31 SWITCH	1
NAF 213028-3		1
NAF 213024-3		1
Q7018-N46-064		2
Q7018-AL46-018		2

REQUIREMENTS PER AIRPLANE
REPLACED
REPLACED BY 28E5849
STAMP PART NUMBER WHERE SHOWN
SCALE 29" - 1-0"
1/4+

AC		LANG	SHEET	SHEETS	SHEETS	SHEETS
NAVY NONE	NONE	1-9-42	1-10-43			
HEAT TREAT	FINISH	DRAFT	CHKD	STRESS	DAY	APPROV

NAME HOUSING ASSY.-ELEC. MICRO SWITCH.
CONSOLIDATED AIRCRAFT CORP. San Diego, Calif.
OPP HAND
SIZE G
DWG NO. 28E6255

ALTERATIONS	DATE	BY

LET	ALTERATION	DATE	BY
A	CHGD POSITION OF 28E6351, 3/8 DIM WAS 8 1/2, NO WT. CHG	9-15-42	WTS
B	AN5150D-10(4) WAS AN5150D-8(4), NEA WT. CHG	11-16-42	ROSS
C	CREATED -2, -3 & -4 ASSYS. (NEA WT. CHG)	3-26-43	[illegible]
D	28E6351-3 WAS 28E6351-4 FOR -3 ASSY. NO WT. CHG.	4-9-43	CARTER
E	IN PLAN, REPLACE FOR -0 & -2 ASSYS. EACH, AC365D832(4) WAS AN515D8-10(4) WAS (B) & FOR -2 ASSY. 28E6351-2 (1) WAS NO WT. CHG.	5-18-43	CARTER

FWD

STA G2

$8\frac{1}{2}$

A

$3\frac{1}{8}$ APPROX.

Ⓐ

28B4122 (REF)

PLAN VIEW

⓪ (-0 ASSY. PBY-5B)
② (-2 ASSY. PBY-5A & PBY-5 #1-90) PORT & STBD. INST.
③ (-3 ASSY. PBY-5 #91 & ON) PORT INST.
④ (-4 ASSY PBY-5 #91 & ON) STBD. INST. Ⓒ

#18 (169) 4 HOLES. JIG LOCATE TO MATCH 28E6351
Ⓑ AN5150B-10(4)
AC365D832(4)

28E6351-0 (FOR -0 ASSY ONLY)
28E6351-2 (FOR -2 ASSY ONLY)
28E6351-3 (FOR -3 ASSY ONLY) Ⓓ
28E6351-4 (FOR -4 ASSY ONLY)

PBY-5A
AN 983-47
AN 936-1006
AN 949-66
PBY-5
AN 955-34
AN 936-1010
PBY-5B
AN 955-351

C-91876 #1 (1-90)
C-91876 #91 (1-30)

VIEW A-A

QUAN. EACH ASSY.	MODEL	INST ASSY.	DWG.	PART No	STOCK	MATERIAL	SPEC.
-4	PBY-5	28E1013	1				
-3	PBY-5	28E1013	1				
-2	PBY-5A	28E1013	2	28E6351-3			
-3	PBY-5	28E1013	2	28E6351-4			
-4	PBY-5B	28E6058	2				
				AC365D832			
				AN5150D-10			
				28B4122-2			
				28E6351			

REQUIREMENTS PER AIRPLANE

REPLACES	1-60 Dwg. No.
REPLACED BY	Apr. No.

UNIT IN DRAWING VALUES DRAWING: INCH
SCALE: 1½-0"
STAMP PART NUMBER WHERE SHOWN

PARTS LIST PER ASSY.

	-0	-2	-3	-4	-5
LH REQ.					
RH REQ.					

A C
NAVY
HEAT TREAT
FINISH

4-27-42 DATE ISSUED
MODEL
DRAFT | CHECK | STRUCT | MAT | APPROV | ENG

NAME INST- ELEC-WAIST CAMERA SW. BOX-STBD PORT
CONSOLIDATED AIRCRAFT CORP. SAN DIEGO, CALIF.

OPP. HAND
DWG. G
28E6354

R 1/4 1-6-43

LET	ALTERATION	DATE	BY
A	STRINGER #832 WAS 833, 834 WAS 835. DIM L WAS B. ADDED PORT SIDE-LOOKING OUTB'D NO WT. CH'G.	10-12-42	ANNESTED E.O. AB1138
B	28E6353 WAS 28E6353 L/R. IN B/N 28E6353 (2) WAS 28E6353(L) & 28E6353R(1). NO WT. CH'G.	10-10-42	WHITE E.O. A12205
C	MOVED LOCATION OF BOX TO AFT SIDE OF STA. 776 (NO WT. CHG.)	11-28-42	Pro-Sh E.O. 20964
D	CREATED -2 & -3 ASS'YS. (SEE ALSO 11-28-42)	12-8-42	Pro-Sh E.O. 21119 SEE 89-18

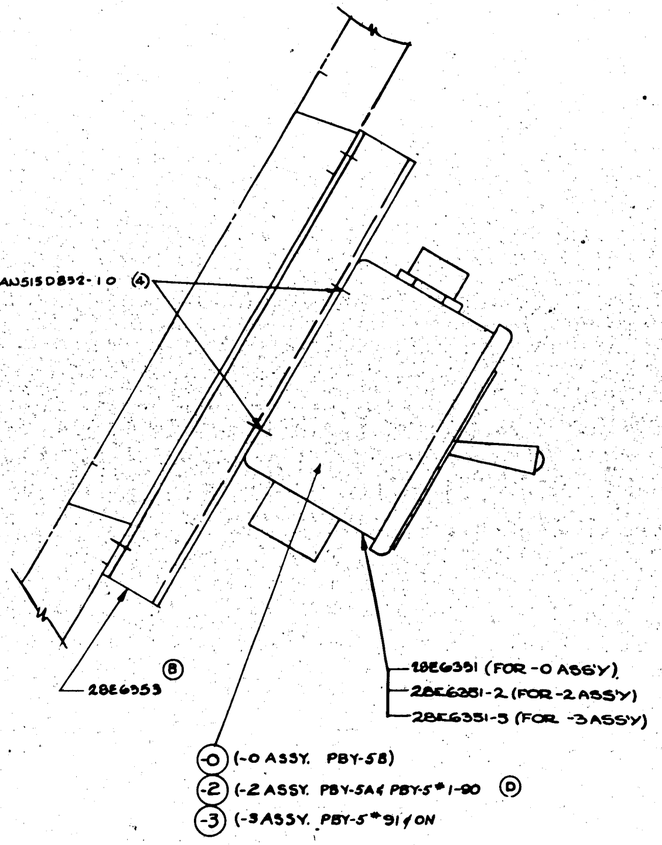
AN515D832-10 (4)
28E6353
28E6351 (FOR -0 ASS'Y)
28E6351-2 (FOR -2 ASS'Y)
28E6351-3 (FOR -3 ASS'Y)
-0 (-0 ASSY. PBY-5B)
-2 (-2 ASSY. PBY-5A & PBY-5* 1-90) D
-3 (-3 ASSY. PBY-5* 91 ON

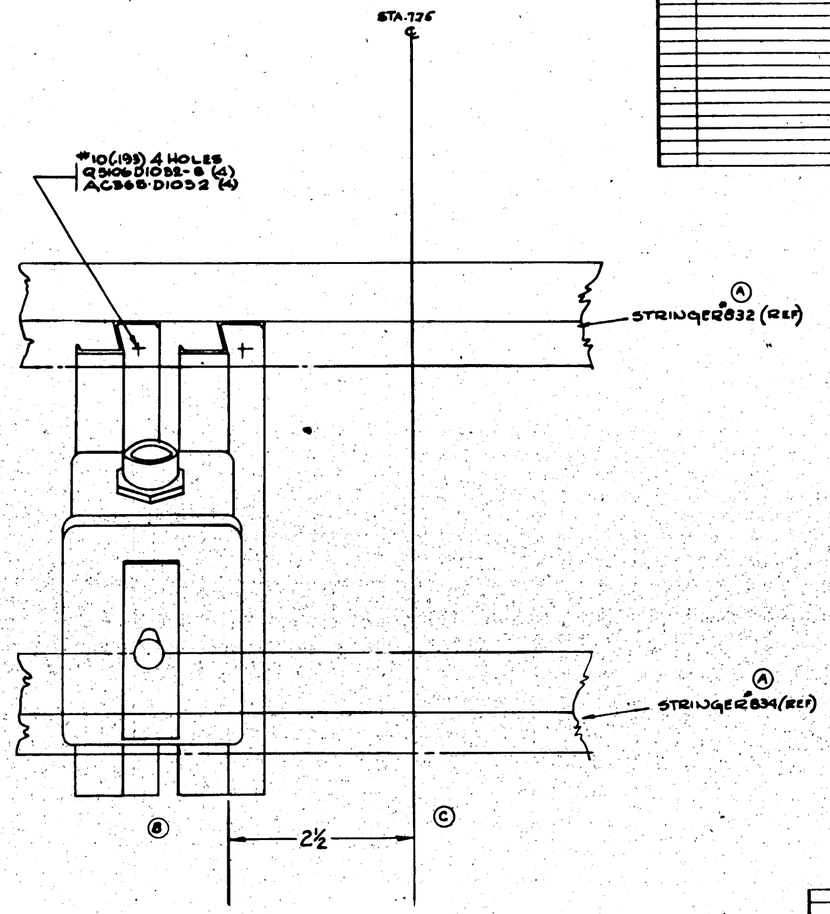

PBY-5A
S.O. 933-47
S.O. 936-100
S.O. 949-66

PBY-5
S.O. 953-34
S.O. 936-400

PBY-5B
S.O. 952-35

(MCE. 89-18) C. 91676 # 91 & ON

C. 70496 # 81876 & 1-90

-3	PBY-5	28E1013	1										
-2	PBY-5A	28E1013	1	AC 365 D1032			4	4	4				
-2	PBY-5	28E1013	1	AN 515 D832-10			4	4	4				
-0	PBY-5B	28E6046	1	Q5106 D1032-8			4	4	4				
	MODEL	NEXT ASSY	NO.	PART No	STOCK	MATERIAL	SPEC	LH	RH	LH	RH	LH	RH
	REQUIREMENTS PER AIRPLANE							REQ -0		REQ -2		REQ -3	REQ -4	REQ -5
	LACES		1.61 SCALE QTY.	28E6351-5										
	REPLACED BY		ACT. QTY.	28E6351-2						1		1		
				28E6353				2		2		2		
				28E6351				1						
				-0										
	STAMP PART NUMBER WHERE SHOWN			PARTS LIST PER ABBY.										

A C		6-27-42		GARDER	BOWLES
NAVY		MOORE			7-21-42
HEAT TREAT	FINISH	DRAFT	CHECK	STRUCT	MAT

NAME	INST-ELEC-TAIL CAMERA SWITCH BOX	OPP HAND	
CONSOLIDATED AIRCRAFT CORP. San Diego Calif.		DWG. SIZE G	28E6355

R 8/42

LET	ALTERATION	DATE	BY
A	REVISED FINISH NOTE	2-20-41	[illegible]
B	REVISED FINISH NOTE	9/6/41	[illegible]
C	NAF 813019-3 WAS NAF 813019-4 & NAF 813020-3 WAS NAF 813020-4 & ADD (B) @ 20182-048-067 WAS NOTE	10/[illegible]/41	[illegible]
D	ADDED -8 ALTERN	11/6/41	Bonner
E	ADD TO INCH PARTS FOR MC ANC. MM ARM 54 & DAN-MC CABLE WAS: (MATL FOR -8 ALT TO BE - ADDED MC 6A TO NAF 813-8 - CHGD MTG. SRF. TO 1/4 63-32 MAX WAS 125)	11-6-41	Bonner
F	REM'D REFS FOR NAF 813019-2 & NAF 20182-8 & 813020-048-067 WAS: NAF A31181	2-23-42	CLARK
G	REMOVED AN3064-B(1); AN3064-7(1) & AN960C8L16L(2) FROM -2 ASSY. W.T.CHG. NO	9-23-42	CLARK
H	29E1132-6 WAS -9 ASSY; & 29E1132-7 WAS -2 ASSY. NO WT. CHG.	2-23-43	CLARK
J	REMOVED NAF 813019-2 (REF) & NAF 21902B-2 (REF) NO WT CHG	9-23-43	CLARK

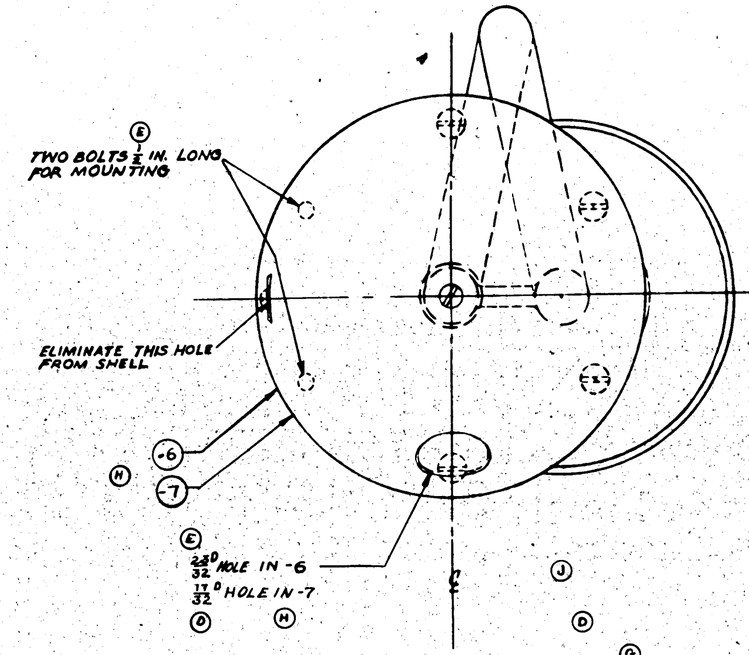

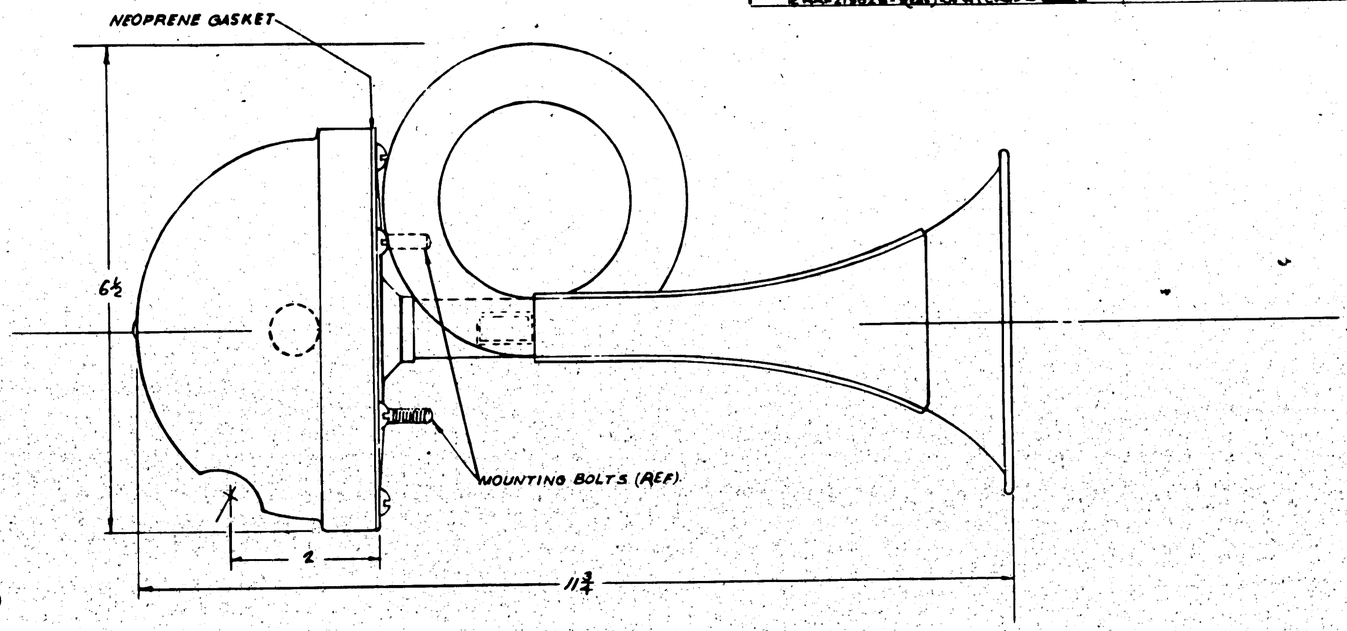

HORN NO 537 MAYBE
PURCHASED FROM GRAYBAR ELEC CO.
SAN DIEGO, CALIF.

FINISH:
ALL METAL PARTS, EXCEPT PARTS WITHIN THE HORN MOTOR ENCLOSURE TO BE CADMIUM PLATED, ONE COAT OF NAVY P27 PRIMER & 2 COATS OF ALUMINIZED PRIMER. ALL PARTS, INCLUDING THE INSIDE SURFACES OF THE HORN MOTOR ASSEMBLY TO BE ELECTRO PLATED WITH TIN.

NOTE:
1- NAVY P27 PRIMER = ZINC CHROMATE PRIMER
NAVY P27 ALUMINIZED PRIMER, IS MADE BY ADDING FOUR OZ. OF ALUMINUM PASTE PIGMENT TO ONE PACKAGE GALLON OF ZINC CHROMATE PRIMER.
2- DIAPHRAGM TO BE CHROME VANADIUM STEEL & NOT PLATED
3- HORN TO BE FURNISHED WITH 24" LEAD WIRE ON -6 & 24" LEAD WIRE ON -7. WIRE TO BE A-16GA. NAVY WIRE.

ITEM DASH NO.	MODEL	PART NO.	QTY
-7	XP3Y1	31E002	1
-6	P3Y-2A	28E5004	1
-6	28-3MN	28E5004	1
-6	28-3MN	28E5004	1
-5	28-3AMC	28E5004	1
-6	28-3MC	28E5004	1
-7	P3Y-3	28E5005	1
-6	28-3ME/MA	28E5004	1
-7	P3Y-3A	28E5005	1
-6	P3Y-2	28E5004	1
-6	P3Y-3	28E5004	1

REQUIREMENTS PER AIRPLANE
REPLACES 3.00 Each QTY
REPLACED BY ACT QTY

SCALE	DRAWN	TRACED	CHECKED	APPROVED
12" = 1'-0"				

STAMP PART NUMBER WHERE SHOWN

ITEM	STOCK	MATERIAL	SPEC	-0 REQ	-2 REQ	-3 REQ	-4 REQ	-5 REQ
-7	SCHWARZE HORN #537							
-6	SCHWARZE HORN #537							

PARTS LIST PER ASSY.

MATERIAL	FINISH	DRAFT	DATE	CHECK	STRUCT	DATE	APPROV	DATE
NAVY MOVE HEAT TREAT	NOTED		9/6/41					

OPP HAND

NAME WARNING HORN-ELEC.

CONSOLIDATED AIRCRAFT CORP. SAN DIEGO, CALIF.

SIZE G DWG NO. 29E1132

R

29E1132

LET	ALTERATION	DATE	BY
U	TRACED. NO WT CHG.		

℄ PILOT'S FLOOR

(169) THRU AT ASSEMBLY
AN 520-8-5 SCREW
AN 345-8 NUT
AN 960-8 WASHER
AN 935-8 LOCK WASHER

AN430-D3-5

AN430-D3-4

AN442-D3

MAP HOLDER

LACK LETTERS. NOTE: OMIT STENCILLING ON -9 ASS'Y.

⅛ HINGE FORMED FOR HINGE PIN

DETAIL B

SECTION B-B

DETAIL A

POCKET FOR PENCIL STITCH ONE TO EACH END SEE DETAIL "B"

SECTION AA

PILOT'S FLOOR (REF)

22 HGT (REF) ANGLE ON FLOOR SUPPORT

AN442-D3

(9) ASSY. MAP HOLDER

ROD (3)

△ C.V.A.C. #FAB 6-50 (501) MAY BE PURCHASED FROM THE PANTASOTE CO NEW YORK, N.Y.

* MAY BE MADE FROM SCRAP 4" INNER TUBE, BUT MUST BE LIVE RUBBER

NOTE USE 22F055-9 AS REPLACEMENT FOR 22F055 ON P2Y-2 & P2Y-3

REF. AIRCORPS #076187

FINISH CODE	
Z	ANODIC [illegible]
P	[illegible]
GP	[illegible]
C	CADMIUM PLATE

-5	XP4Y1	31F159	1				
-9	P52Y-3	28F500	2	AN442-D3			
-58	58-5MN	28F285	1	AN935-8			
-59	59-5MN	28F285	1	AN960-8			
-9	285MC	28F285	1	AN345-8			
-9	285MA	28F285	1	AN520-8-5			
-9	P8Y-58	28F285	1	AN430-D3-5			
-9	P8Y-59	28F285	1	AN430-D3-4			
-9	P8Y-364	28F285	1				
-9	P8Y-182	28F285	1				
	XP3Y-1	28F285	1				
	P2Y-3	22F500	2				
	XP4Y-1	18F011	2				
	P2Y-2	22F1024	2				
				-8	.051 x 3/8 x 1	AL AL SHT	QQ-A-
				-7	1/32 x 1 x 4-1/2	ASBESTOS FIBER SHEET	F.F.K.
				-6	.020 x 11⅛ x 12¾	AL AL SHT	QQ-A-25
				± -5	1/8 x 4 DIA	RUBBER	BAN
				-4	.064 x 1 x 2⅜	ALUM SHT	4024
				-3	⅛ DIA x 12⅜	AL AL 2000	46237
				△ -2	.48 OZ x 3⅜ x 10¼	FAB PAN SYN	6-50
				-1	.020 x 10⅜ x 12¾	AL AL SHT	QQ-A-25

ASSY DASH NO.	MODEL	NEXT ASSY	NO.
REQUIREMENTS PER AIRPLANE			
REPLACES 22F055 OF 3/28/35			
REPLACED BY			

LIMIT ON DECIMALS UNLESS OTHERWISE SPECIFIED ± 1/32

SCALE 12"=1'-0"

STAMP PART NUMBER WHERE SHOWN

PART NO | STOCK | MATERIAL | SPEC

PARTS LIST PER ASSY.

A.C.	ZP-2GP		
NAVY			
HEAT TREAT	FINISH	DRAFT	

NAME HOLDER-MAP-FURNISH INSTALLATION

CONSOLIDATED VULTEE AIRCRAFT CORP. SAN DIEGO DIVISION . . SAN DIEGO, CALIF.

SIZE G

C.V.A.C. GOODYEAR

LET	ALTERATION	DATE	BY	LET	ALTERATION	DATE	BY
A	ADDED DETAIL "A" & SECT. "C-C"						
	[illegible] CHANGED NUMBER IN [illegible] (PER ECR 616)						
B	ADDED NOTE "TRIM" --- INSTALL WT. CHG. NEG.	11-8-41					

E.O. A96278

-7 L

28AS103-7L (REF)

EDGE OF GLASS (REF)

28AS103-8L (REF)

-8 L

INSTALL WITH LIP ON OUTSIDE OF GLASS. (CONVEX SIDE)

LOAS601-6 (REF)

TRIM FLUSH WITH MOULDING AFTER INSTALL.

(B)

(TYPICAL SECTION)

28AS103-6 (REF)

A

A

SECT A-A
SCALE 12"=1'-0"

-9 L

28AS103-9L (REF)

28AS103-6L (REF)

B (A)

-6 L

NOTE:
1. SECTION TO BE XM-41 073.
2. SIZE TO BE DETERMINED BY VENDOR SO THAT SEAL WILL FIT GLASS FIRMLY AFTER BEING STRETCHED INTO PLACE.
3. TEST PLATES OF GLASS TO BE FURNISHED VENDOR.

SECTION C-C
SCALE-6"=1'0"
(A)

C

3 1/2

2 1/2

2 1/2

C

DETAIL B
SCALE-6"=1'0"
(A)

PURCHASE TO DWG

RUSH RELEASED 12-8-41

HULL #510 & ON

REV LTR	MODEL	PART NO	QTY
R	PBY-5A	28AS1006	1
P	PBY-5A		1
N	PBY-5A		1
A	PBY-5A		1
R	PBY-5A		1
P	PBY-5A		1
N	PBY-5A		1
A	PBY-5A		1

REQUIREMENTS PER AIRPLANE

REPLACED	1-A
REPLACED BY	

STAMP PART NUMBER WHERE SHOWN

PART NO	STOCK	MATERIAL	SPEC

PARTS LIST PER ASSY

-0	-2	-3	-4	-5

A.C.
NAVY None
HEAT TREAT
None
FINISH

NAME SEAL INST-ARM'T-ROTATING SHIELD

CONSOLIDATED AIRCRAFT CORP.

G

28AS1007

R

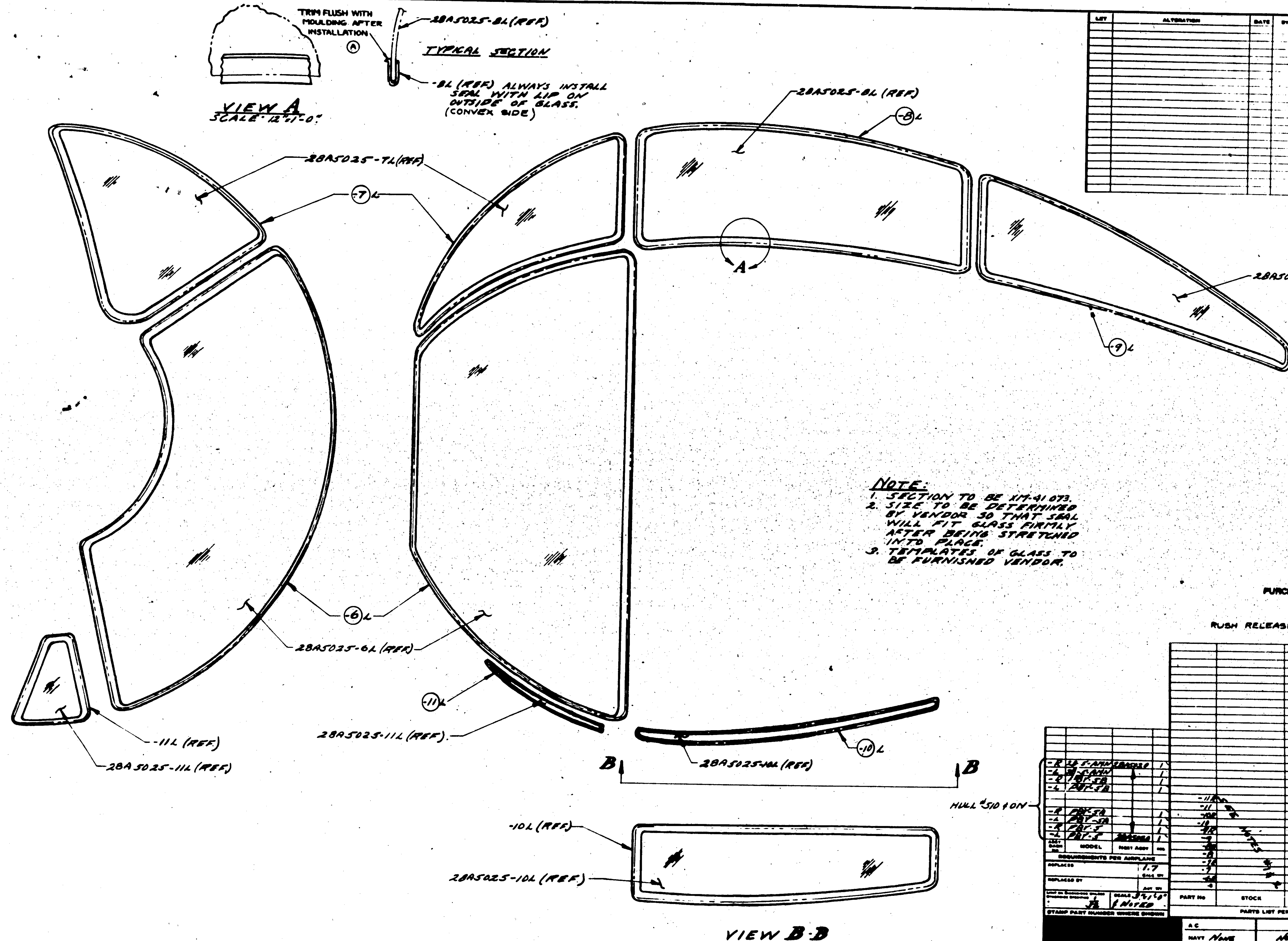

NOTE:
1. SECTION TO BE XM-41 073.
2. SIZE TO BE DETERMINED BY VENDOR SO THAT SEAL WILL FIT GLASS FIRMLY AFTER BEING STRETCHED INTO PLACE.
3. TEMPLATES OF GLASS TO BE FURNISHED VENDOR.

PURCHASE TO DWG.

RUSH RELEASED 12-8-41

LET	ALTERATION	DATE	BY
A	ADDED NOTE "TRIM--- INSTALLATION", WT. CHG. NEG.	2-6-41	[illegible]

HULL #510 & ON

ASSY DASH NO	MODEL	NEXT ASSY	NO.
-R	28 5-AMN	28A5020	1
-L	28-5AMN		1
-R	PBY-5B		1
-L	PBY-5B		1
-R	PBY-5A		1
-L	PBY-5A		1
-R	PBY-5		1
-L	PBY-5	28A5020	1

REQUIREMENTS PER AIRPLANE

REPLACES — CALC WT 1.7

REPLACED BY — ACT WT

SCALE 3"=1'-0" & NOTED

STAMP PART NUMBER WHERE SHOWN

PART No	STOCK	MATERIAL	SPEC.
-11R	SEE NOTES		
-11L			
-10R			
-10L			
-9R			
-9L			
-8R			
-8L			
-7R			
-7L			
-6R			
-6L			

PARTS LIST PER ASSY

A C
NAVY None — None
HEAT TREAT — FINISH

DRAFT — CHECK — STRUCT — MAT — APPROV. — ENG

NAME SEAL INST. -ARM'T.-STATIONARY SHIELD

CONSOLIDATED AIRCRAFT CORP. SAN DIEGO, CALIF.

OPP HAND 28A5602

G 28A5602

R

EO B2944

LET	ALTERATION	DATE	BY
	IN BK CHG -4 PBY-5A WAS SPBY5A NO WT CHG	2-6-43	[illegible]

REV	ALTERATION	DATE	BY
A	ON -2 ASSY 28E1249-2(1) REPLACES 28E5245R(1), NAF 1150-6A-64(2) REPLACES NAF 1150-6A-60(2), NAF 1150-6A-56(2) REPLACES NAF 1150-6A-52, NAF 1150-6A-52(2) & 28E5254-18(1) REPLACES 28E5234-13(1) ON -0 ASSY NAF 1150-6A-56(4) REPLACES NAF 1150-6A-52, NAF 1150-6A-60 WT CHG NEG		
B	ON FACE FOR -0 ASSY 28E5245 (REF) REPLACES 28E1120-20(REF) NO WT CHG		
C	ADDED 28E5246(2) TO -0 & -2 ASSYS NEG WT CHG		
D	CREATED -3 ASSY REPLACING -0 ASSY WT CHG NEG		
E	CREATED -4 ASSY NEG WT CHG		
F	ON FACE OF DRWG REMOVED ALL REFERENCES TO -0 ASSY RE VISED REQ'MTS PLANE ON FACE ADDED 28E5663-75(REF) NO WT CHG		

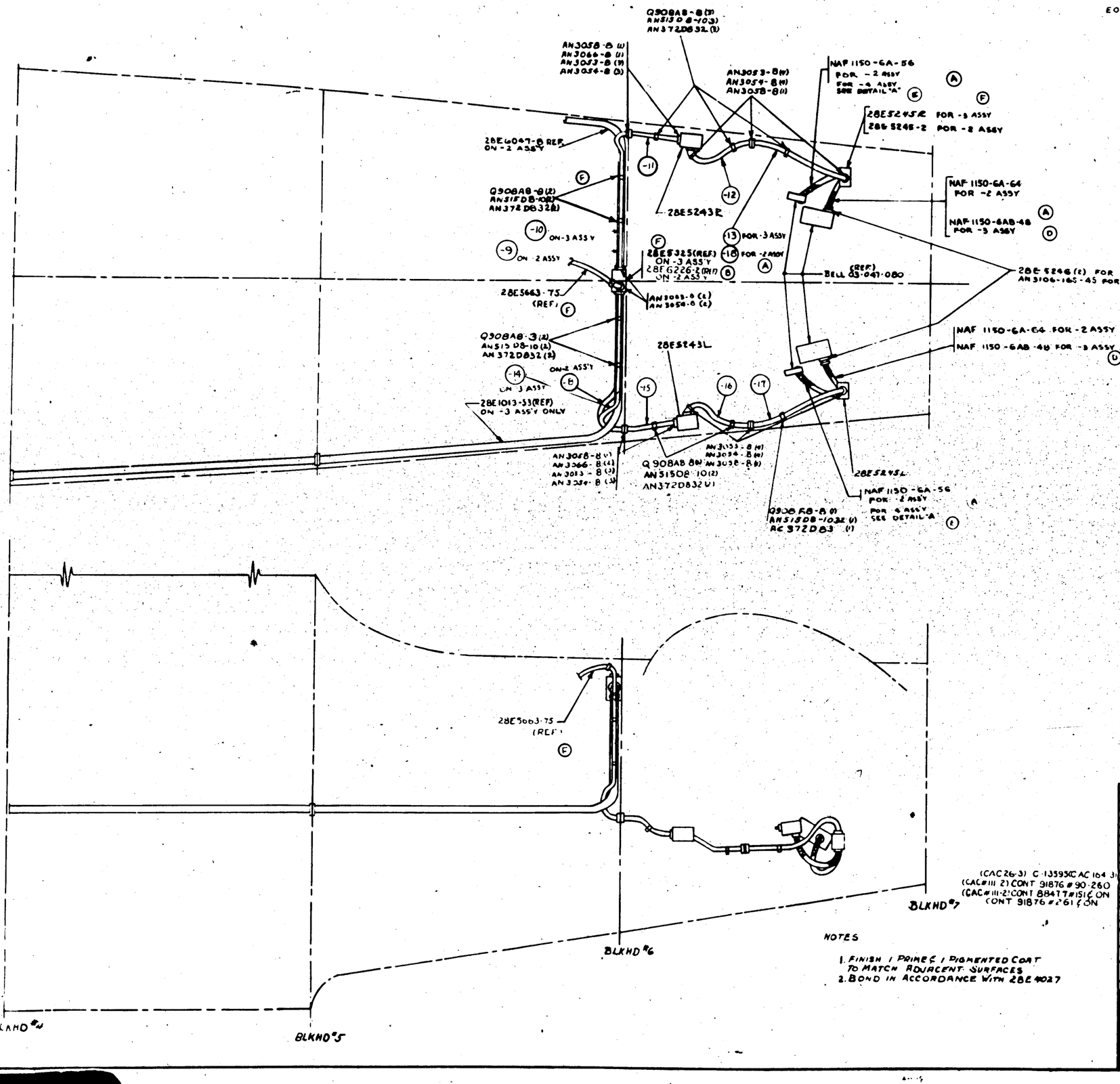

DETAIL "A"
FOR -4 ASSY ONLY

(CAC 26-3) C-13593C AC 164-3)
(CAC #111-2) CONT 91876 #90-260
(CAC #111-2) CONT 8847 TWISIC ON CONT 91876 #261 ON

NOTES
1. FINISH / PRIME & PIGMENTED COAT TO MATCH ADJACENT SURFACES
2. BOND IN ACCORDANCE WITH 28E4027

PART NO	STOCK	MATERIAL	SPEC	-0	-2	-3	-4	-8
AN3056-8							2	2
AC365D-1032							2	2
AN526DD1032-9							2	2
Q908A-16							2	2
NAF1150-6B-52							2	2
NAF1150-6A-56				2				
NAF1150-6A-64				2				
Q908AB-10				10	10	10		
NAF1150-6AB-48					2	2		
AN3106-165-45					2	2		
28E5246				2				
AN3066-8				2	2	2		
AN3038-8				4	4	4		
AN1024-8				16	16	16		
AN3053-8				16	16	16		
AN5108-10				8	8	8		
AC372D832				8	8	8		
28E5245L								
28E5245R								
28E5243L								
28E5243R								
28E5254-18	4 OD A 065-29	AL AL TUBE	66T19-29AH					
28E5254-6	4 OD A 065-29	AL AL TUBE	66T19-29AH					
-5	1/2 OD A 065-60	AL AL TUBE	66T19-29AH					
-10	1/2 OD A 065-60	AL AL TUBE	66T19-29AH					
-11	1/2 OD A 065-115							
-12	1/2 OD A 065-85							
-13	1/2 OD A 065-69							
-14	1/2 OD A 065-114							
-15	1/2 OD A 065-115							
28E5254-1	4 OD A 065-29	AL AL TUBE	66T19-29AH					

PARTS LIST PER ASSY

DASH NO	MODEL	ASSY NO	QTY
-4	PBY-5A	28E5663	1
-3	PBY-5	28E1013	1
-2	PBY-5B	28E6067	1
-0	PBY-5	28E1013	1

REQUIREMENTS PER AIRPLANE
REPLACED 266
REPLACED BY
STAMP PART NUMBER WHERE SHOWN

A C		KNUCK					
NAVY NONE	NOTE 2	8-19-42	9234				
HEAT TREAT	FINISH	DRAFT	CHECK	GROUP			

NAME CONDUIT INST. - ELECT - CONTINUOUS FEED
CONSOLIDATED AIRCRAFT CORP. SAN DIEGO, CALIF.

CLASS NONE
SIZE G
28E5254

R

28E5254